TM 10-5430-245-13&P

TECHNICAL MANUAL

OPERATOR AND FIELD MAINTENANCE

INCLUDING REPAIR PARTS AND SPECIAL TOOLS LIST

FOR

DRUM, FABRIC, COLLAPSIBLE, DRINKING WATER, 500 GALLON CAPACITY MODEL GTA500W

(NSN 5430-01-527-4514)

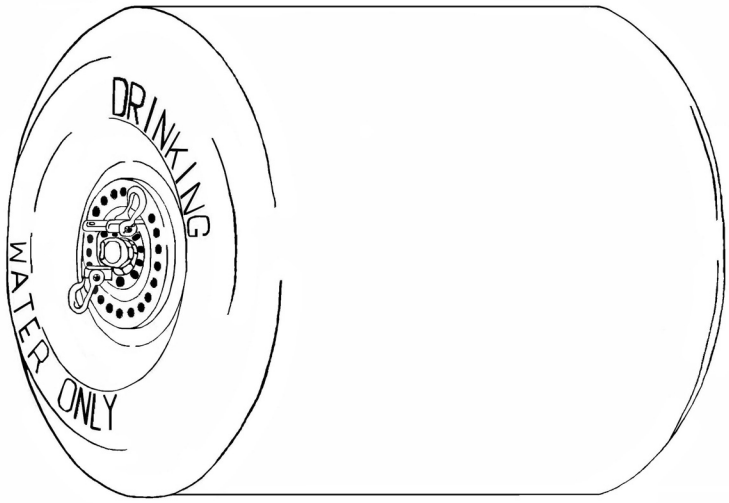

DISTRIBUTION STATEMENT A – Approved for public release; distribution is unlimited.

HEADQUARTERS, DEPARTMENT OF THE ARMY
MAY 2006

WARNING SUMMARY

Death or serious injury may result if personnel fail to observe the following safety precautions:

DRINKING WATER ONLY

WARNING

The drum is only authorized to be filled with DRINKING WATER. The drum is designed and permanently labeled for use with DRINKING WATER ONLY. Filling the drum with any other liquid may cause sickness or death of crewmembers.

BEFORE DISPENSING WATER TO PERSONNEL

WARNING

Check to make sure drum has been used only for drinking water. Failure to check the drum could lead to sickness or death. If there is any question about the quality of the water, do not use the drum.

WARNING

Check coupler valve and adapter assembly for dirt, dust and any foreign matter which may contaminate drinking water. All coupler valve and assembly parts must be cleaned with a mild non-toxic detergent and assembled on a clean surface. Remember that the coupler valve and adapter assembly will be used to dispense drinking water. Dirty or contaminated parts could cause sickness or death to personnel drinking water from the drum.

WARNING

All drum parts must be cleaned with a mild, non-toxic detergent and assembled on a clean surface. Remember that the drum will be used to store and dispense drinking water. A dirty or contaminated drum could cause sickness or even death to personnel drinking from it.

WARNING

Dirt, dust, or foreign matter may contaminate drinking water causing sickness or death.

WARNING

Drum must be completely dry inside and out for storage to prevent mold or mildew from growing on the drum. Sickness or death could occur.

LIFTING DRUM

WARNING

When lifting drum, always use five personnel to avoid injury. The empty drum weighs 220 lbs.

DRUM POSITIONING

WARNING

Ensure drum is securely positioned to avoid slipping or rolling during filling operations. Failure to comply may result in injury to personnel or damage to equipment.

FIRST AID

FIRST AID instructions are given in FM 4-25.11, First Aid.

LIST OF EFFECTIVE PAGES/WORK PACKAGES

NOTE: Zero in the "Change No." column indicates an original page or work package.

Date of issue for the original manual is:

Original.....0 ..... 23 May 06

Total number of pages for front and rear matter is 26 and the total number of work packages is 32, consisting of the following:

Page/WP No.	Change No.	Page/WP No.	Change No.
Title	0	Chp 7 title page	0
Warning	0	WP 0021 (6)	0
i-iv	0	WP 0022 (4)	0
Chp 1 title page	0	WP 0023 (4)	0
WP 0001 (2)	0	WP 0024 (2)	0
WP 0002 (4)	0	WP 0025 (2)	0
WP 0003 (2)	0	Chp 8 title page	0
Chp 2 title page	0	WP 0026 (2)	0
WP 0004 (2)	0	WP 0027 (4)	0
WP 0005 (8)	0	WP 0028 (2)	0
WP 0006 (4)	0	WP 0029 (4)	0
WP 0007 (2)	0	WP 0030 (2)	0
Chp 3 title page	0	WP 0031 (2)	0
WP 0008 (6)	0	WP 0032 (2)	0
Chp 4 title page	0	INDEX-1 – INDEX-4	0
WP 0009 (8)	0		
Chp 5 title page	0		
WP 0010 (2)	0		
WP 0011 (12)	0		
WP 0012 (2)	0		
WP 0013 (2)	0		
Chp 6 title page	0		
WP 0014 (4)	0		
WP 0015 (2)	0		
WP 0016 (2)	0		
WP 0017 (10)	0		
WP 0018 (4)	0		
WP 0019 (2)	0		
WP 0020 (2)	0		

HEADQUARTERS,
DEPARTMENT OF THE ARMY
WASHINGTON, D.C., 23 May 2006

TECHNICAL MANUAL

OPERATOR AND FIELD MAINTENANCE

INCLUDING REPAIR PARTS AND SPECIAL TOOLS LIST FOR DRUM, FABRIC, COLLAPSIBLE, DRINKING WATER 500 GALLON CAPACITY MODEL GTA500W

(NSN 5430-01-527-4514)

Current as of 23 May 2006

REPORTING ERRORS AND RECOMMENDING IMPROVEMENTS

You can help improve this publication. If you find any mistakes or if you know of a way to improve the procedures, please let us know. Submit your DA Form 2028 (Recommended Changes to Publications and Blank Forms) through the Internet, on the Army Electronic Product Support (AEPS) website. The Internet address is https://aeps.ria.army.mil. The DA Form 2028 is located under the Public Applications section in the AEPS Public Home Page. Fill out the form and click on SUBMIT. Using this form on the AEPS will enable us to respond quicker to your comments and better manage the DA Form 2028 program. You may also mail, fax or e-mail your letter or DA Form 2028 directly to: AMSTA-LC-LMIT/TECH PUBS, TACOM-RI, 1 Rock Island Arsenal, Rock Island, IL 61299-7630. The e-mail address is TACOM-TECH-PUBS@ria.army.mil. The fax number is DSN 793-0726 or Commercial (309) 782-0726.

Distribution Statement A – Approved for public release; distribution is unlimited.

TABLE OF CONTENTS

WP Sequence No.
Page No.

WARNING SUMMARY ..... a

LIST OF EFFECTIVE PAGES ..... A

HOW TO USE THIS MANUAL iv

Chapter 1 DESCRIPTION AND THEORY OF OPERATION
General Information 0001 00
Equipment Description and Data 0002 00
Figure 1. Components of Drum 0002 00-2
Table 1. Equipment Data 0002 00-3
Theory of Operation 0003 00
Figure 1. Fabric Drum 0003 00-1

Chapter 2 OPERATOR INSTRUCTIONS
Description and Use of Operator Controls and Indicators 0004 00
Figure 1. Operator Controls and Indicators 0004 00-1
Operation Under Usual Conditions 0005 00
Figure 1. Coupler Valve Installed and Locked Onto Adapter Assembly 0005 00-2
Figure 2. Collapse Drum 0005 00-2
Figure 3. Drum Collapse 0005 00-2
Figure 4. Unlock and Remove Coupler Valve 0005 00-3
Figure 5. Locking Valve to Filler Hose 0005 00-3
Figure 6. Remove Air From Filler Hose 0005 00-4
Figure 7. Filling Drum With Drinking Water 0005 00-5
Figure 8. Dispensing Drinking Water 0005 00-7
Operation Under Unusual Conditions 0006 00
Figure 1. Banking Soil 0006 00-2
Figure 2. Tie Down Drum 0006 00-2
Identification Labels and Information Stencils 0007 00
Figure 1. Identification Labels and Information Stencils 0007 00-1

Chapter 3 OPERATOR TROUBLESHOOTING
Operator Troubleshooting Procedures 0008 00
Figure 1 ..... 0008 00-2
Figure 2 ..... 0008 00-2
Figure 3 ..... 0008 00-3
Figure 4 ..... 0008 00-4
Figure 5 ..... 0008 00-5

Chapter 4 UNIT TROUBLESHOOTING
Unit Troubleshooting Procedures 0009 00
Figure 1 ..... 0009 00-2
Figure 2 ..... 0009 00-3
Figure 3 ..... 0009 00-4
Figure 4 ..... 0009 00-4
Figure 5 ..... 0009 00-6
Figure 6 ..... 0009 00-7
Figure 7 ..... 0009 00-8

TABLE OF CONTENTS (Continued)

WP Sequence No.
Page No.

Chapter 5 OPERATOR MAINTENANCE
Operator's Preventive Maintenance Checks and Services (PMCS) Introduction 0010 00
Operator's PMCS Procedures 0011 00
Table 1. Operator's Preventive Maintenance Checks and Services For Drum ... 0011 00-2
Remove/Install Coupler Valve 0012 00
Figure 1. Coupler Valve Removal 0012 00-1
Figure 2. Coupler Valve Installation 0012 00-2
Temporary Repair of Drum Body, Method 1 ..... 0013 00
Figure 1. Method 1 Repair 0013 00-2

Chapter 6 UNIT MAINTENANCE
Service Upon Receipt 0014 00
Figure 1. Opening Crate 0014 00-1
Figure 2. Unpacking Crate 0014 00-2
Figure 3. Checking Unpacked Equipment 0014 00-3
Figure 4. Repair Kit Inspection 0014 00-3
Figure 5. Drum Inspection 0014 00-4
Remove and Install Coupler Valve Gasket 0015 00
Figure 1. Coupler Valve Gasket Removal 0015 00-1
Figure 2. Coupler Valve Gasket Installation 0015 00-2
Remove/Install Adapter Assembly and Dust Cap 0016 00
Figure 1. Adapter Assembly 0016 00-1
Remove/Inspect/Clean/Install Shackle, Bearing and Swivel Plates, Wire Rope, Drum Body 0017 00
Figure 1. Shackle Removal 0017 00-1
Figure 2. Drum Chalk Mark 0017 00-2
Figure 3. Bearing Plate Screw Removal 0017 00-2
Figure 4. Closure Ring Removal 0017 00-3
Figure 5. Cable Assembly and Closure Plate Removal 0017 00-4
Figure 6. Shackle Inspection 0017 00-5
Figure 7. Inspection of Drum End Parts 0017 00-6
Figure 8. Cable Assembly Cleaning 0017 00-7
Figure 9. Shackle Installation 0017 00-8
Figure 10. Installation of Drum End Parts 0017 00-9
Temporary Repair of Drum Body, Method 2 ..... 0018 00
Figure 1. Method 2 Repair, Step 1 ..... 0018 00-2
Figure 2. Method 2 Repair, Step 2 ..... 0018 00-2
Figure 3. Method 2 Repair, Step 3 ..... 0018 00-3
Figure 4. Method 2 Repair, Steps 4 and 5 ..... 0018 00-3
Preparation for Storage or Shipment 0019 00
Torque Limits 0020 00

Chapter 7 PARTS INFORMATION
Repair Parts and Special Tools List Introduction 0021 00
Table 1. SMR Code Explanation 0021 00-2
Repair Parts and Special Tools List, Valve Coupler and Adapter Assemblies 0022 00
Figure 1. Valve Coupler and Adapter Assemblies 0022 00-2
Repair Parts and Special Tools List, Plates, Bearing, Swivel and Closure 0023 00
Figure 2. Plates, Bearing, Swivel and Closure 0023 00-2
National Stock Number Index 0024 00
Part Number Index 0025 00

TABLE OF CONTENTS (Continued)

WP Sequence No.
Page No.

Chapter 8 SUPPORTING INFORMATION
References 0026 00
Maintenance Allocation Chart (MAC) Introduction 0027 00
Maintenance Allocation Chart 0028 00
Table 1. MAC For Drum 0028 00-1
Table 2. Tools and Test Equipment For Drum 0028 00-2
Table 3. Remarks For Drum 0028 00-2
Components of End Item (COEI) and Basic Issue Item (BII) Lists 0029 00
Table 1. Components of End Item List 0029 00-2
Table 2. Basic Issue Item List 0029 00-3
Additional Authorization List 0030 00
Table 1. Additional Authorization List 0030 00-1
Expendable and Durable Items List 0031 00
Table 1. Expendable and Durable Items List 0031 00-1
Mandatory Replacement Parts List 0032 00
Table 1. Mandatory Replacement Parts List 0032 00-1

Glossary ..... Glossary 1
Alphabetical Index INDEX-1

HOW TO USE THIS MANUAL

This technical manual is composed of a series of work packages (WP). Each WP comprises an individual maintenance or operator task, general information section, description section, theory section, operating procedure(s), troubleshooting section, or supporting information section (e.g., Maintenance Allocation Chart, Expendable and Durable Items List, etc.). Each WP is identified by a unique, sequential WP number. Work Packages are grouped in chapters as in a conventional technical manual (e.g, Chapter 1 – Description and Theory of Operation, Chapter 2 – Operator Instructions, etc.). The most obvious distinction is in the WP numbering and page numbering system.

For example, the following numbers, 0015 00 in an upper right corner would be the WP number. The first four digits are the WP sequence number, while the fifth and sixth digits indicate the change status of the WP; (00 indicates an original WP). The WP number is repeated at the bottom of the page with a – number (e.g., "-1") added to indicate the page number. Page numbers are sequential within a WP, WPs are sequential within a manual and grouped into chapters according to operation or maintenance level.

Supporting Information WPs at the rear of the manual serve the same function and contain the same information as appendices in older manuals.

Figures and Tables

Figures in WPs are numbered and titled. The figures are sequentially numbered within the WP. In a Repair and Special Tools List (RPSTL), figures are numbered sequentially within each WP.

Each table is numbered and titled within a WP.

CHAPTER 1

DESCRIPTION AND THEORY OF OPERATION FOR DRUM, FABRIC, COLLAPSIBLE, DRINKING WATER 500 GALLON CAPACITY

OPERATOR'S AND UNIT MAINTENANCE AND REPAIR PARTS AND SPECIAL TOOLS LIST DRUM, FABRIC, COLLAPSIBLE, DRINKING WATER, 500 GALLON CAPACITY GENERAL INFORMATION

SCOPE

Type of Manual:	Operator's and Field Level Maintenance Manual With Field Level Maintenance Repair Parts and Special Tools List (Including Unit and DS Repair Parts)
Model Number and Name:	GTA500W Drum, Fabric, Collapsible, Drinking Water, 500 Gallon
Purpose of Equipment:	Transports, stores and dispenses drinking water. Empty drum collapses to 15% of filled size for easy storage and transportation.

MAINTENANCE FORMS, RECORDS AND REPORTS

Department of the Army forms and procedures used for equipment maintenance will be those prescribed by DA Pam 738-750, Functional User's Manual for the Army Maintenance Management System (TAMMS) or AR 700-138, Army Logistics Readiness and Sustainability.

REPORTING EQUIPMENT IMPROVEMENT RECOMMENDATIONS (EIR)

If your drum needs improvement, let us know. Send us an EIR. You, the user, are the only one who can tell us what you don't like about your equipment. Let us know why you don't like the design or performance. If you have Internet access, the easiest and fastest way to report problems or suggestions is to go to https://aeps.ria.army.mil/aepspublic.cfm (scroll down and choose "Submit Quality Deficiency Report" bar). The Internet form lets you choose to submit an Equipment Improvement Recommendation (EIR), a Product Quality Deficiency Report (PQDR) or a Warranty Claim Action (WCA). You may also submit your information using an SF 368 (Product Quality Deficiency Report). You can send your SF 368 via e-mail, regular mail or facsimile using the addresses/facsimile numbers specified in DA PAM 738-750, Functional User's Manual for the Army Maintenance Management System (TAMMS). We will send you a reply.

CORROSION PREVENTION AND CONTROL (CPC)

Corrosion Prevention and Control (CPC) of Army materiel is a continuing concern. It is important that any corrosion problems with this item be reported so that the problem can be corrected and improvements can be made to prevent the problem in future items.

Corrosion specifically occurs with metals. It is an electrochemical process that causes the degradation of metals. It is commonly caused by exposure to moisture, acids, bases or salts. An example is the rusting of iron. Corrosion damage in metals can be seen, depending on the metal, as tarnishing, pitting, fogging, surface residue and/or cracking.

Plastics, composites and rubbers can also degrade. Degradation is caused by thermal (heat), oxidation (oxygen), salvation (solvents) or photolytic (light, typically UV) processes. The most common exposures are excessive heat or light. Damage from these processes will appear as cracking, softening, swelling and/or breaking.

If a corrosion problem is identified, an SF 368, Product Quality Deficiency Report should be submitted to the address specified in DA Pam 738-750, Functional User's Manual for the Army Maintenance Management System (TAMMS).

DESTRUCTION OF ARMY MATERIEL TO PREVENT ENEMY USE

Refer to TM 750-244-3 for information and instructions covering destruction of Army Materiel.

PREPARATION FOR STORAGE OR SHIPMENT

Refer to WP 0019 00.

NOMENCLATURE CROSS-REFERENCE LIST

This listing includes nomenclature cross-references used in this manual.

Common Name	Official Nomenclature
Coupler Valve	Valve Assembly, 2 x 2
Adapter	Adapter Assembly
Drum	Drum, Fabric, Collapsible, Drinking Water, 500 Gallon Capacity

LIST OF ABBREVIATIONS/ACRONYMS

WP	Work Package	M^3	Cubic meter
UV	Ultra violet	CM^2	Square meter
Gal.	Gallon	CM	Centimeter
PSI	Pounds square inch	CU	Cubic
Lb.	Pound	Ft.	Foot/feet
M	Meter	KG	Kilogram
IN	Inch		

QUALITY OF MATERIAL

Material used for replacement, repair, or modification must meet the requirements of this manual, TM 10-5430-245-12&P. If quality of material requirements are not stated in this manual, the material must meet the requirements of the drawings, standards, specifications, or approved engineering change proposals applicable to the subject equipment.

SUPPORTING INFORMATION FOR REPAIR PARTS, SPECIAL TOOLS, TMDE AND SUPPORT EQUIPMENT

Repair parts are listed and illustrated in parts information work packages, WP 0022 and WP 0023, of this manual.

No special tools or equipment are required for the water drum.

COMMON TOOLS AND EQUIPMENT

For authorized common tools and equipment, refer to the Modified Table of Organization and Equipment (MTOE), CTA 50-970, Expendable/Durable Items (Except: Medical, Class V, Repair Parts and Heraldic Items), CTA 50-909, Field and Garrison Furnishings and Equipment or CTA 8-100, Army Medical Department Expendable/Durable Items, as applicable to your unit.

OPERATOR'S AND UNIT MAINTENANCE AND REPAIR PARTS AND SPECIAL TOOLS LIST DRUM, FABRIC, COLLAPSIBLE, DRINKING WATER, 500 GALLON CAPACITY EQUIPMENT DESCRIPTION AND DATA

EQUIPMENT CHARACTERISTICS, CAPABILITIES AND FEATURES

The drum stores, transports and dispenses drinking water. The ends of the drum have adapters for attaching coupler valves which may be used to fill or dispense drinking water. A chiller may be connected for cooling the water.

- Stores drinking water either indoors or outdoors.
- Transports drinking water by towing or trucking.
- Dispenses water either directly or through chiller.
- Lightweight
- Collapsible
- Suspension capability from either end.
- Drop capability, up to 12.5 ft. filled.

LOCATION AND DESCRIPTION OF MAJOR COMPONENTS

Drum (1). Holds up to 500 gallons of drinking water.

Coupler Valve (2). Manual valve for filling and dispensing drinking water, located on both ends of the drum.

Adapter Assembly (3). Contains check valve which closes when coupler valve is removed, located on both ends of the drum.

Shackles (4). Means for suspending/lifting or tying down drum from either end. Mounted on swivel plates located on both ends of the drum.

Swivel Plate (5). Provides attaching points for shackles and tow bars, located on both ends of the drum.

Cable Assemblies (6). Limits endwise expansion of drum and controls its shape.

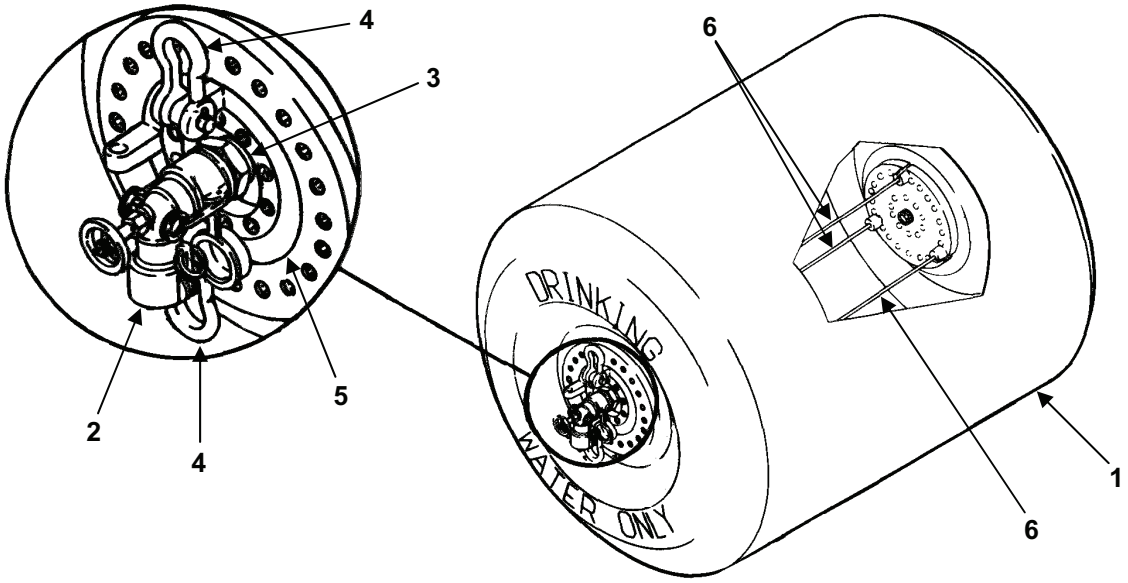

Figure 1. Components of Drum

EQUIPMENT DATA

The following is a tabular presentation of all physical and performance data required for the operation and maintenance of the Drum.

Table 1. Equipment Data

DESCRIPTION	QTY	LEADING PARTICULARS
Drum	1	Capacity: 500 gals (1892.5 liters) Working Pressure: 5.0 psi (0.3515 kg/cm²) Max. Proof Pressure: 30.0 psi (2.109 kg/cm²) Max. Towing Speed: 10 mph (16 kilometers per hr.) Overall Dimensions and Weight (filled): Weight: 4344.0 lbs. (1974.5 kg) Cubage: 67.0 cu. ft. (1.89 m³) Length, nominal: 58.0 in. (1.47 m) Dia., nominal: 55.0 in. (1.397 m) Vertical Drop (filled): 12.5 ft. max. (3.81 m) Weight (empty): Crated, incl. tie-down assy.: 420.0 lbs. (190.9 kg) Uncrated, drum only: 220.0 lbs. (100.0 kg) Dimensions (crated): Length: 75.50 in. (1.92 m) Width: 42.5 in. (1.08 m) Height: 20.25 in. (0.52 m) Cubage: 37.60cu. ft. (1.05 m³)
Repair Kit	1	Weight: 1.5 lb. (0.68 kg) Width: 7.0 in. (0.18 m) Length: 10.0 in. (0.25 m)

OPERATOR'S AND UNIT MAINTENANCE AND REPAIR PARTS AND SPECIAL TOOLS LIST DRUM, FABRIC, COLLAPSIBLE DRINKING WATER, 500 GALLON CAPACITY THEORY OF OPERATION

PRINCIPLES OF OPERATION AND USE

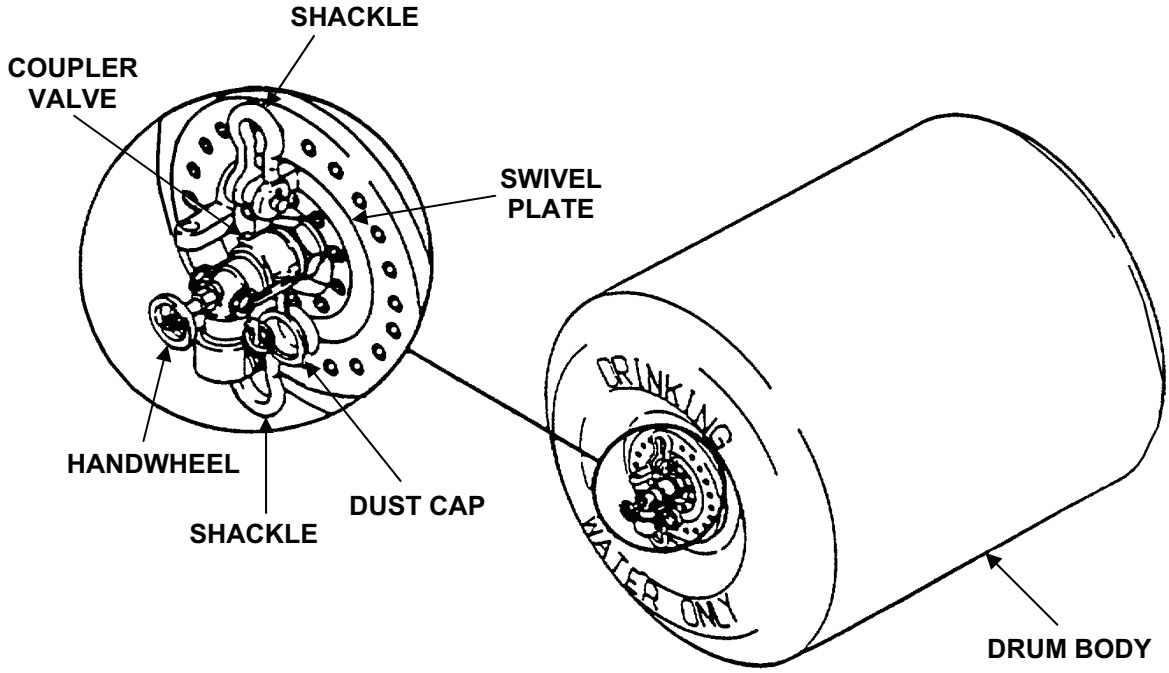

Figure 1. Fabric Drum.

COUPLER VALVE – Used to fill and dispense water from fabric drum.

HANDWHEEL – Manual control for coupler valve.

SHACKLES – Located at both ends of drum; used to lift, suspend or tie down drum.

SWIVEL PLATE – Contains lugs for mounting shackles and for attaching tow bar. Swivel rotates for towing drum behind vehicle.

DRUM BODY – Shaped like a large, wide wheel to transport drinking water by rolling.

DUST CAP – Used to keep dirt and foreign material from contaminating the drinking water and to protect adapter assembly from damage.

CHAPTER 2

OPERATOR INSTRUCTIONS
FOR
DRUM, FABRIC, COLLAPSIBLE, DRINKING WATER,
500 GALLON CAPACITY

OPERATOR'S AND UNIT MAINTENANCE AND REPAIR PARTS AND SPECIAL TOOLS LIST DRUM, FABRIC, COLLAPSIBLE, DRINKING WATER, 500 GALLON CAPACITY DESCRIPTION AND USE OF OPERATOR CONTROLS AND INDICATORS

INTRODUCTION

The following table and illustration provides the description and use of the controls and indicators pertaining to the drum.

CAUTION

To avoid damage to the drum, DO NOT overfill.

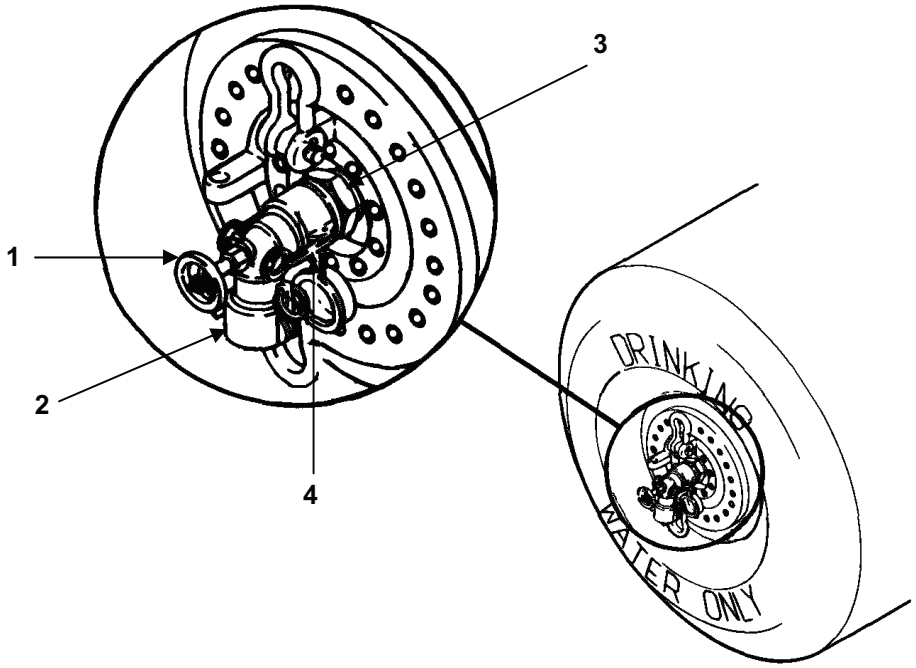

Figure 1. Operator Controls and Indicators.

Key	Control/Indicator	Function
1	Handwheel	Controls the flow of drinking water into or out of the drum.
2	Coupler Valve	Contains the handwheel and cam arm which are used as operator's controls.
3	Adapter Assembly	Contains a check valve that closes when the coupler is removed to prevent water from leaking out of the drum.
4	Cam Arm Assembly	Locks or unlocks coupler valve from adapter assembly or filler hose.

OPERATOR'S AND UNIT MAINTENANCE AND REPAIR PARTS AND SPECIAL TOOLS LIST DRUM, FABRIC, COLLAPSIBLE, DRINKING WATER, 500 GALLON CAPACITY OPERATION UNDER USUAL CONDITIONS

INITIAL SET-UP:

Reference:
WP 0011
WP 0012
TM 10-8110-201-14&P

FILLING THE DRUM

WARNING

This drum is only authorized to be filled with DRINKING WATER. The drum is designed and permanently labeled for use with DRINKING WATER ONLY. Filling the drum with any other liquid may cause sickness or death of crewmembers.

CAUTION

To avoid damage to the drum, DO NOT overfill.

NOTE

Use the services of Unit Maintenance for the original unpacking and inspection.

1. Perform Preventive Maintenance Checks and Services (PMCS) (WP 0011, Table 1).

WARNING

Ensure drum is securely positioned to avoid slipping or rolling during filling operations. Failure to comply may result in injury to personnel or damage to equipment.

CAUTION

Do not tow drum if drum has been repaired. Towing drum could further damage the drum.

2. Locate drum near source of water supply. Choose a site as level and firm as possible.

3. Completely remove air from drum as follows:

a. At one end of the drum, remove dust cap (Figure 1, Item 1) from adapter assembly (Figure 1, Item 2).

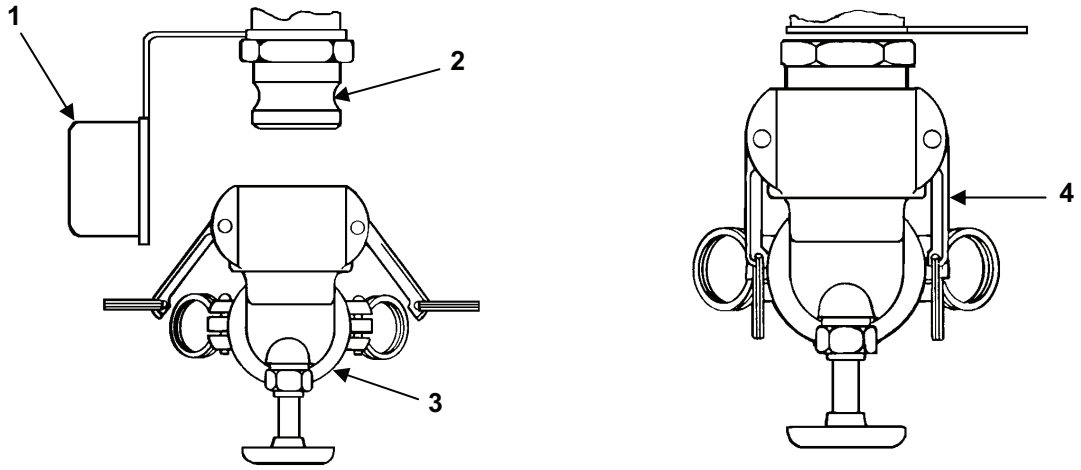

Figure 1. Coupler Valve Installed and Locked Onto Adapter Assembly.

b. Slide coupler valve (Figure 1, Item 3) onto adapter assembly (Figure 1, Item 2). Lock coupler valve (Figure 1, Item 3) onto adapter assembly (Figure 1, Item 2) by pushing in the cam arms (Figure 1, Item 4).

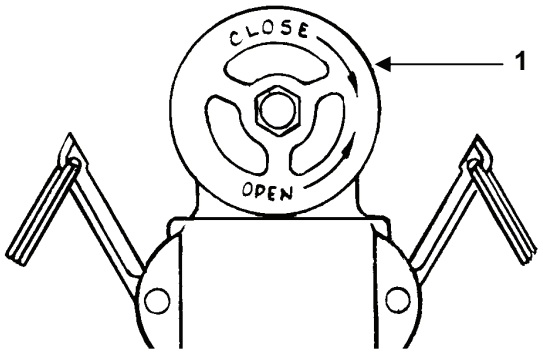

Figure 2. Collapse Drum.

c. Turn the handwheel (Figure 2, Item 1) counterclockwise all the way to completely open the coupler valve (one of the two coupler valves that comes with the drum).

d. Fully collapse the drum (Figure 3). Push down on drum to squeeze air out. Trapped air will rush out of the coupler valve (Figure 1, Item 3).

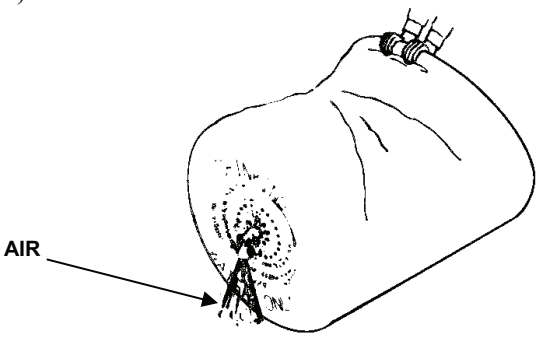

Figure 3. Drum Collapse.

e. When the drum is fully collapsed, close coupler valve (Figure 4, Item 1) by turning valve handle clockwise (Figure 2, Item 1) then unlock and remove coupler valve (Figure 4, Item 1) from adapter assembly (Figure 4, Item 2). Unlock coupler valve (Figure 4, Item 1) by pulling out cam arms (Figure 4, Item 3). Pull coupler valve off drum.

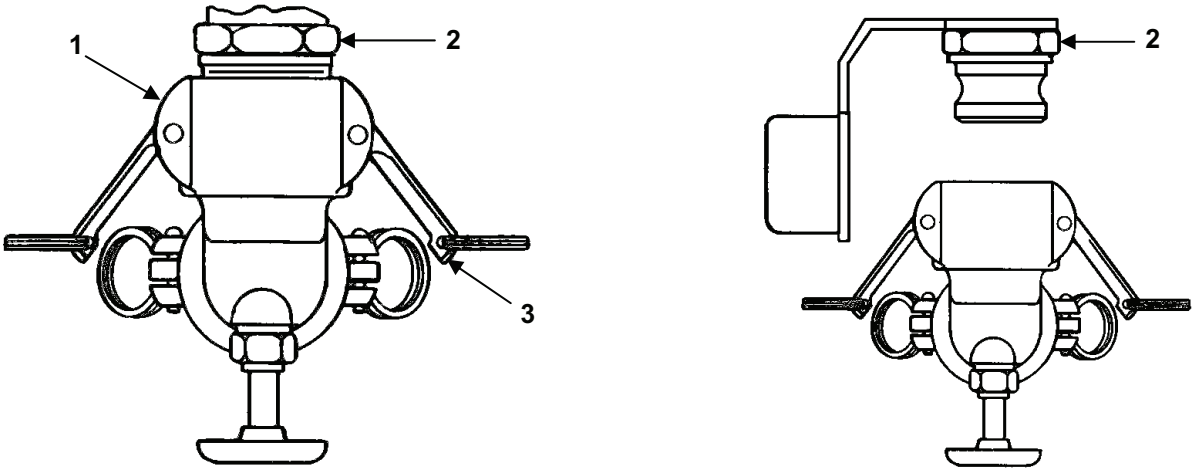

Figure 4. Unlock and Remove Coupler Valve.

4. Lock coupler valve (Figure 5, Item 1) to drinking water supply filler hose (Figure 5, Item 2). Lock the coupler valve end (Figure 5, Item 1) without the valve stem seat to filler hose (Figure 5, Item 2) as shown.

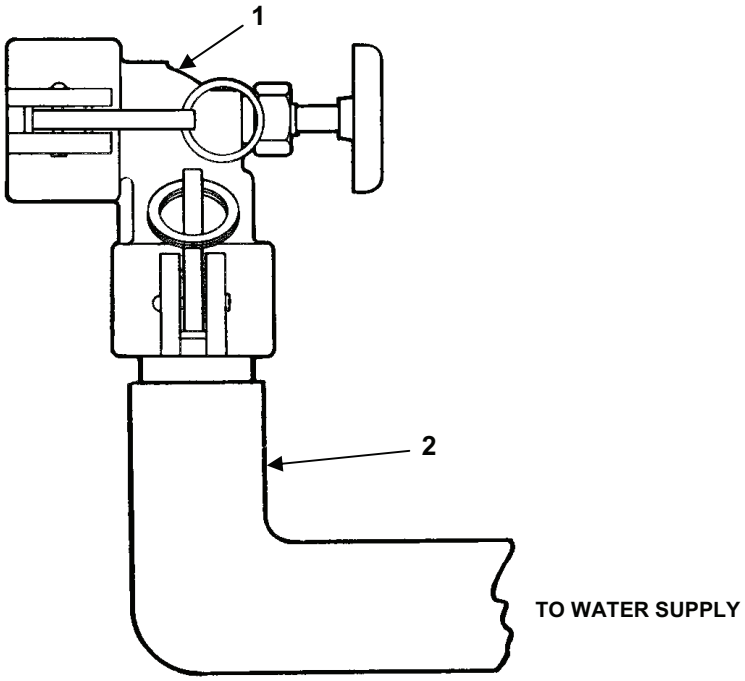

Figure 5. Locking Valve to Filler Hose.

5. Remove air from filler hose (Figure 6, Item 1) as follows: (This will prevent air in the filler hose from going into the drum, allowing more room in the drum for drinking water.)

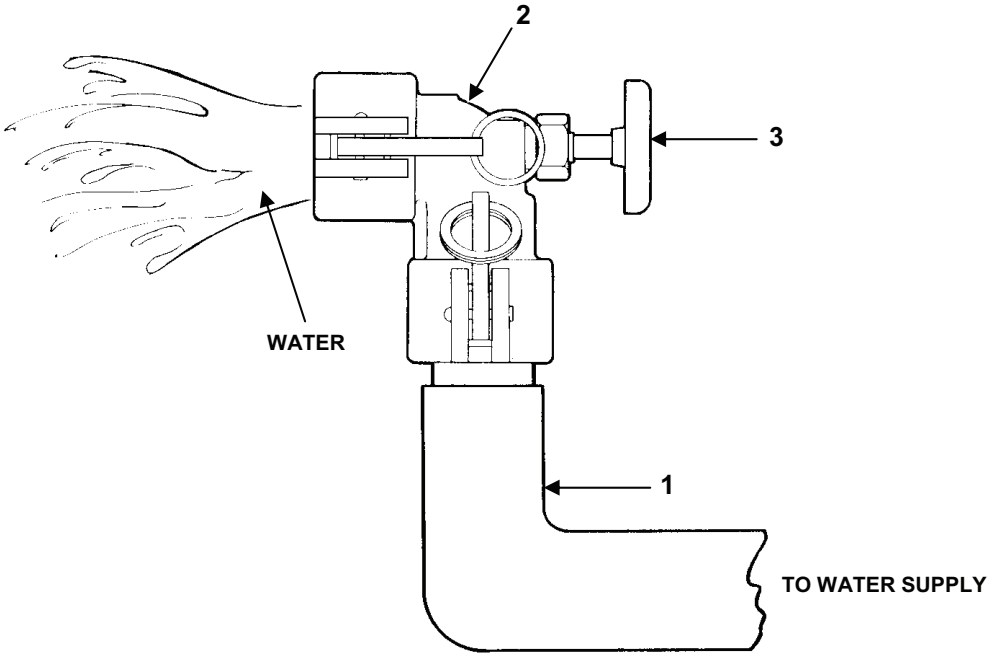

Figure 6. Remove Air From Filler Hose.

a. With coupler valve (Figure 6, Item 2) locked onto the filler hose (Figure 6, Item 1), turn handwheel (Figure 6, Item 3) clockwise all the way to close coupler valve (Figure 6, Item 2).

b. Turn handwheel (Figure 6, Item 3) counterclockwise two turns to slightly open coupler valve (Figure 6, Item 2).

c. Open valve at source of drinking water supply.

d. When only water flows from coupler valve (Figure 6, Item 2), turn handwheel (Figure 6, Item 3) clockwise to close coupler valve (Figure 6, Item 2).

6. Lock coupler valve (Figure 7, Item 1) onto adapter assembly (Figure 7, Item 2).

WARNING

This drum is only authorized to be filled with DRINKING WATER. The drum is designed and permanently labeled for use with DRINKING WATER ONLY. Filling the drum with any other liquid may cause sickness or death of crewmembers.

CAUTION

To avoid damage to the drum, DO NOT overfill.

7. Turn handwheel (Figure 7, Item 3) counterclockwise all the way to open coupler valve (Figure 7, Item 1) and allow drum to fill with drinking water.

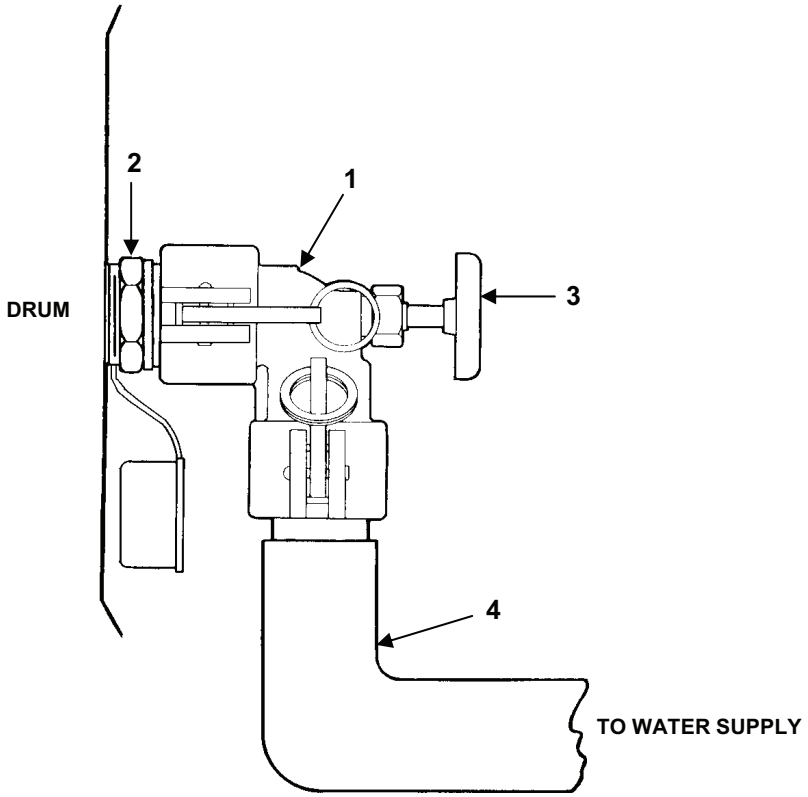

Figure 7. Filling Drum With Drinking Water.

CAUTION

To avoid damage to the drum, DO NOT overfill.

8. When drum is completely filled (5.0 psi maximum working pressure), turn handwheel (Figure 7, Item 3) all the way clockwise to close coupler valve (Figure 7, Item 1), thus shutting off the water supply to the drum.

9. Unlock and remove coupler valve (Figure 7, Item 1) from adapter assembly (Figure 7, Item 2). Leave filler hose (Figure 7, Item 4) attached to the coupler valve and use valve to fill the other drums.

10. Install one coupler valve (Figure 7, Item 1) to either drum end of the filled drum.

11. Repeat steps 3 through 10 for each drum to be filled.

CAUTION

Each drum comes with two coupler valves. After drum is filled, leave the coupler valve installed on drum except during transportation. Remove coupler valve from drum when being transported to prevent damage to valves. During transport, coupler valves must remain with the drum so they are not lost. Be sure coupler valves are protected from dirt and other foreign matter when not installed on the drum.

12. When last drum has been filled, shut off valve at drinking water source and disconnect filler hose (Figure 7, Item 4) from coupler valve (Figure 7, Item 1) that was used to fill drums. Leave coupler valve installed on drum. Install another coupler valve onto the other end of the drum.

DISPENSING DRINKING WATER FROM DRUM

CAUTION

Do not overload transport vehicle with filled drums. Filled drum weighs 4344 pounds (1974.5 kg). Check transport vehicle's weight limits before loading with drums.

CAUTION

Do not tow drum if drum has been repaired. Towing drum could further damage the drum.

1. Roll, tow (Ref. TM 10-8110-201-14&P) or otherwise transport filled drum to place of use.

2. Select a dispensing site that is as level and firm as possible.

3. Perform Preventive Maintenance Checks and Services (PMCS) (WP 0011, Table 1).

4. Uncover one or both adapter assemblies (Figure 8, Item 1) at either end of drum by removing dust caps (Figure 8, Item 2).

5. Turn handwheel (Figure 8, Item 3) all the way clockwise to close coupler valve (Figure 8, Item 4).

WARNING

Dirt, dust, or foreign matter may contaminate drinking water causing sickness or death.

6. Check coupler valve for dirt, dust or any foreign matter. Clean valve of dust, dirt or foreign matter or replace coupler valve (WP 0012).

7. Install and lock a coupler valve (Figure 8, Item 4) onto one or both adapter assemblies (Figure 8, Item 1).

WARNING

Check whether drum has been used with any liquid other than drinking water. Failure to check drum could lead to sickness or death. If there is any question about the quality of the water, do not use the drum.

8. Dispense drinking water from the drum by turning handwheel (Figure 8, Item 3) counterclockwise. Increase the water flow by increasing the number of handwheel (Figure 8, Item 3) counterclockwise turns. Shut off or decrease the water flow by turning handwheel (Figure 8, Item 3) clockwise.

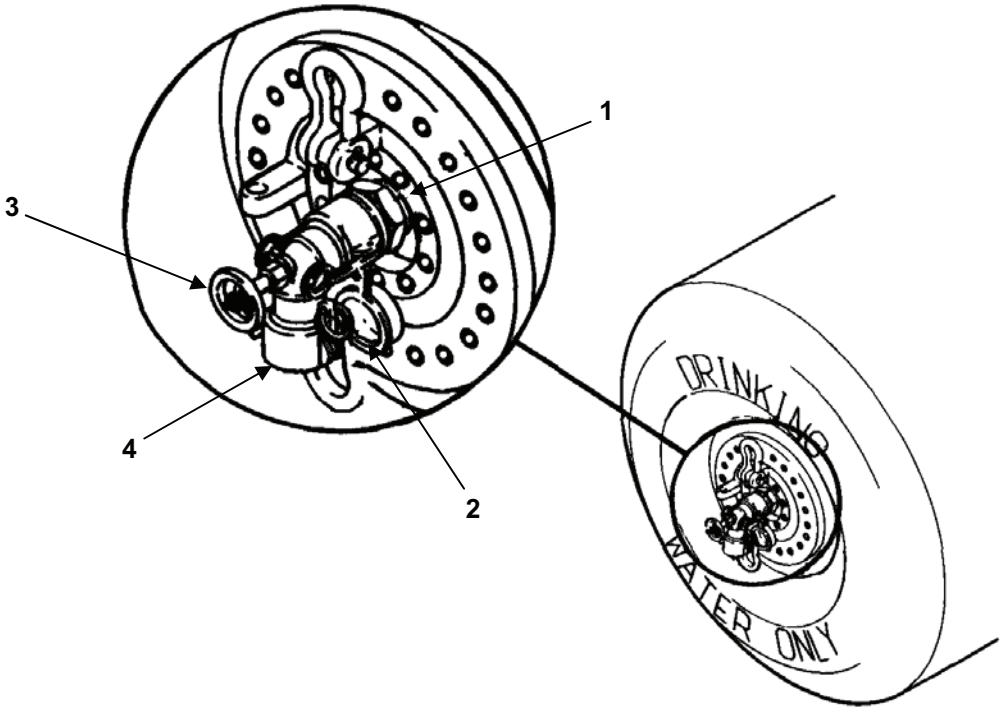

Figure 8. Dispensing Drinking Water.

9. Push down on and collapse drum as water is emptied from it; this removes the maximum amount of water from the drum.

END OF WORK PACKAGE

OPERATOR'S AND UNIT MAINTENANCE AND REPAIR PARTS AND SPECIAL TOOLS LIST DRUM, FABRIC, COLLAPSIBLE, DRINKING WATER, 500 GALLON CAPACITY OPERATION UNDER UNUSUAL CONDITIONS

GENERAL

The drum is designed to operate normally within a wide range of climatic conditions. However, some extreme conditions require special procedures to keep the drum operating properly and to prevent damage.

OPERATION IN EXTREME HEAT, ABOVE 135°F (57°C)

CAUTION

It is important to take the following measures to keep the drum as cool as possible. As the water inside the drum heats up, the water will expand. This expansion of the water could increase the pressure inside the drum to a pressure above the maximum 5 psi operating pressure, which could lead to damage to the drum and loss of the valuable water supply.

1. Do not block air circulation around the drum.
2. Erect a tent or tarpaulin over drum to provide shade.
3. Place drum under shade of trees or cover with leafy branches.
4. Cover drum with wet burlap or other fabric. Keep fabric wet.

OPERATION IN FREEZING TEMPERATURES, 32°F (0°C) AND BELOW

CAUTION

The drum could become brittle in freezing temperatures. Be careful when handling the drum to avoid cracking it.

1. Remove snow, sleet and ice from drum before installing coupler valve.
2. In temperatures below 32°F (0°C), store drum in a heated building, shelter or tent. Allow to thaw before dispensing water.

OPERATION IN STRONG WINDS

1. Anchor drum by banking soil along its sides (Figure 1).

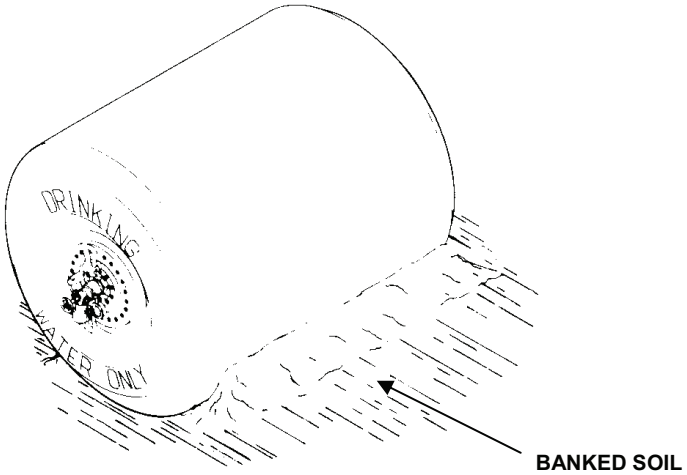

Figure 1. Banking Soil

2. Tie down drum to structures, trees or stakes using rope (Figure 2).

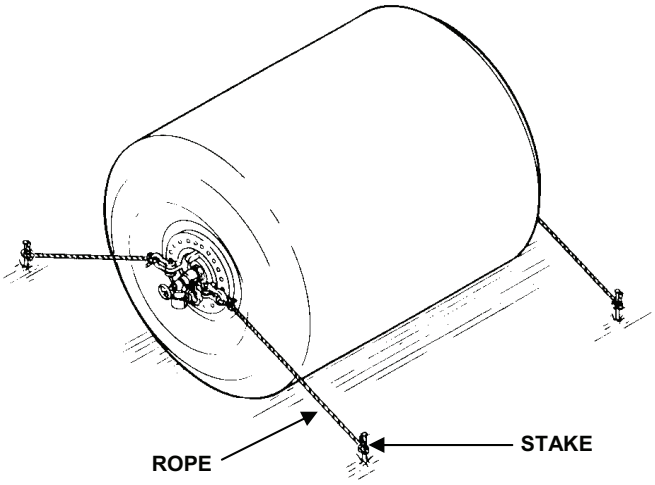

Figure 2. Tie Down Drum

OPERATION IN SANDY AND DUSTY CONDITIONS

WARNING

Dirt, dust, or foreign matter may contaminate drinking water causing sickness or death.

1. Always remove sand and dust from coupler valve and adapter assembly before use.

2. Keep dust cap installed when equipment is not in use.

3. Cover and store coupler valve where it is less likely to get dusty or dirty.

END OF WORK PACKAGE

OPERATOR'S AND UNIT MAINTENANCE AND REPAIR PARTS AND SPECIAL TOOLS LIST DRUM, FABRIC, COLLAPSIBLE, DRINKING WATER 500 GALLON CAPACITY IDENTIFICATION LABELS AND INFORMATION STENCILS

The drum has the following labels and stencils as shown:

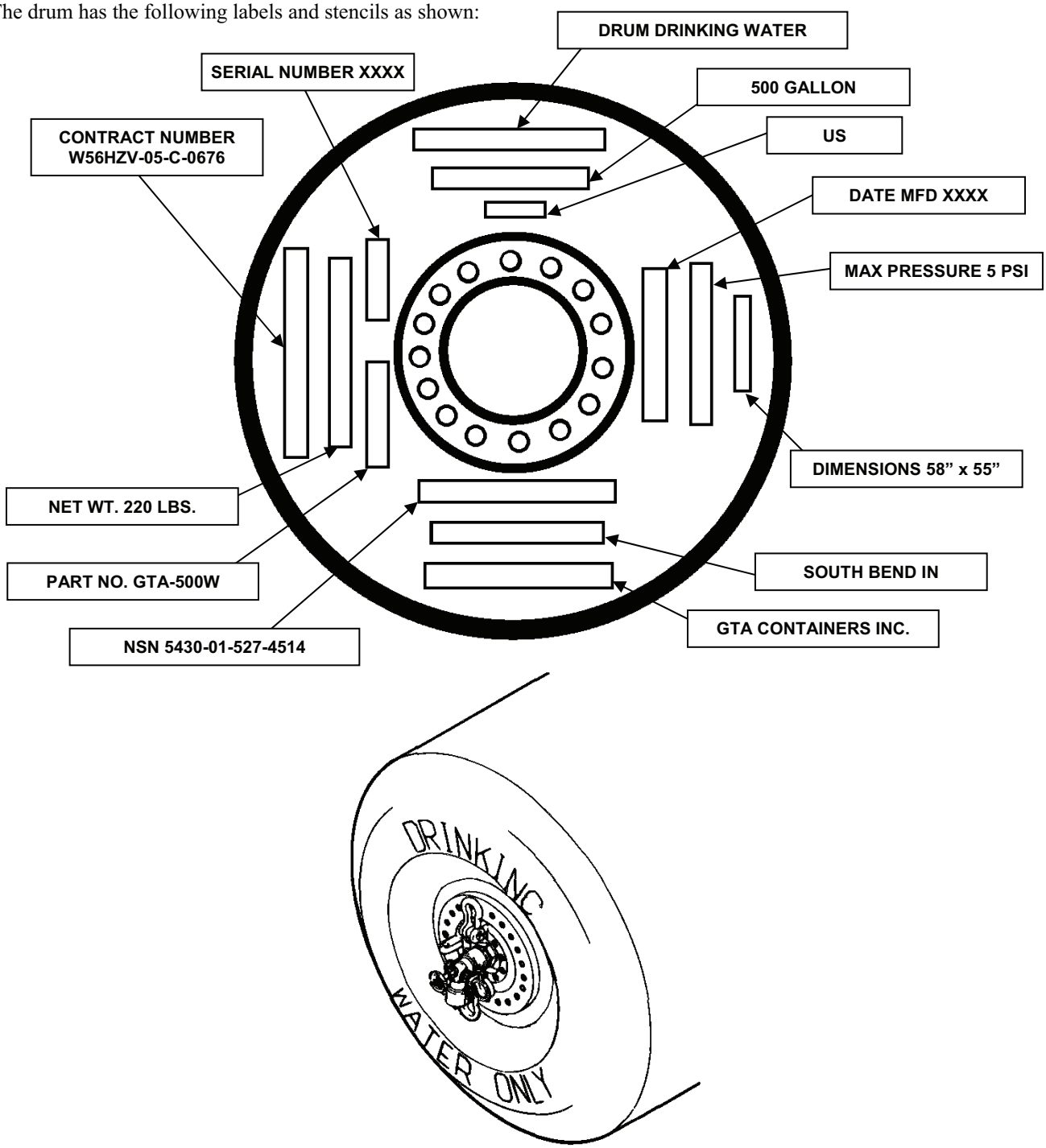

Figure 1. Identification Labels and Information Stencils.

CHAPTER 3

OPERATOR TROUBLESHOOTING FOR DRUM, FABRIC, COLLAPSIBLE, 500 GALLON CAPACITY

OPERATOR MAINTENANCE
DRUM, FABRIC, COLLAPSIBLE, DRINKING WATER, 500 GALLON CAPACITY
OPERATOR TROUBLESHOOTING PROCEDURES

INITIAL SETUP:

References:
WP 0011
WP 0012
WP 0013

TROUBLESHOOTING PROCEDURE

SYMPTOM

Liquid has unusual odor.

MALFUNCTION

WARNING

This drum is only authorized to be filled with DRINKING WATER. The drum is designed and permanently labeled for use with DRINKING WATER ONLY. Filling the drum with any other liquid may cause sickness or death of crewmembers.

It has been determined during PMCS (WP 0011, Table 1) that drum has been used with any liquid other than drinking water or it is suspected that the drinking water may be contaminated.

CORRECTIVE ACTION

Empty contents of drum and notify supervisor.

SYMPTOM

Handwheel on coupler valve is difficult or impossible to turn.

MALFUNCTION

Coupler valve (Figure 1, Item 1) is binding or will not open or close.

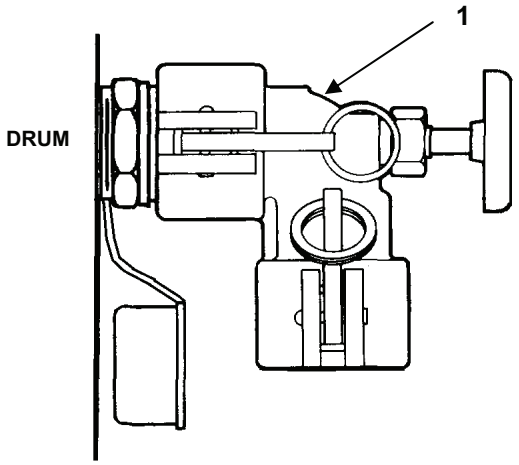

Figure 1.

CORRECTIVE ACTION

Replace coupler valve (Figure 1, Item 1) (WP 0012).

SYMPTOM

Cam arm assemblies will not lock or hold coupler valve in place.

MALFUNCTION

Check cam arm assemblies (Figure 2, Item 1) for wear.

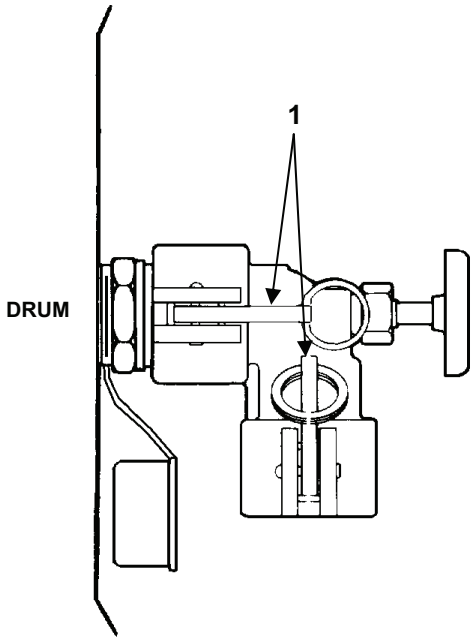

Figure 2.

CORRECTIVE ACTION

If cam arm assemblies (Figure 2, Item 1) are worn, replace coupler valve (WP 0012).

SYMPTOM

Water is leaking from around coupler valve (Figure 3, Item 1).

MALFUNCTION

Water leaks from coupler valve (Figure 3, Item 1) to adapter assembly (Figure 3, Item 2).

CORRECTIVE ACTION

a. Make sure coupler valve (Figure 3, Item 1) is properly closed, locked and installed in place.

b. If leakage continues, remove coupler valve (Figure 3, Item 1) from adapter assembly (Figure 3, Item 2).

c. If water is leaking from adapter assembly (Figure 3, Item 2), notify Unit Maintenance.

d. If adapter assembly (Figure 3, Item 2) is not leaking, check gaskets in coupler valve (Figure 3, Item 1) for damage or contamination. Notify Unit Maintenance if gasket is damaged or contaminated. Reinstall coupler valve (Figure 3, Item 1) and lock back in place.

e. If leakage continues, replace coupler valve (Figure 3, Item 1) (WP 0012).

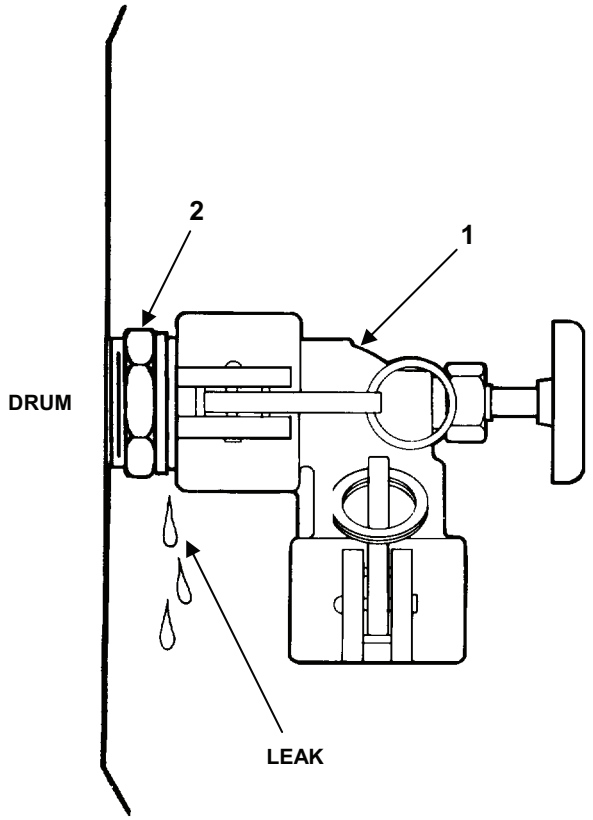

Figure 3.

MALFUNCTION

Coupler valve (Figure 4, Item 1) leaks at valve outlet (Figure 4, Item 2).

CORRECTIVE ACTION

a. Make sure coupler valve is in “off” position.

b. If leakage continues, replace coupler valve (Figure 4, Item 1) (WP 0012).

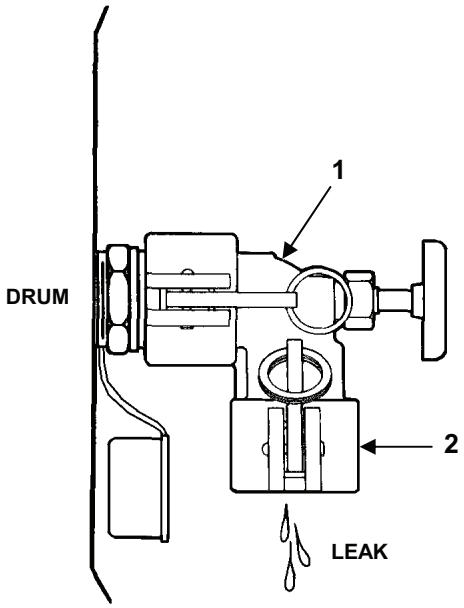

Figure 4.

MALFUNCTION

Coupler valve (Figure 5, Item 1) leaks at packing nut (Figure 5, Item 2) and valve stem (Figure 5, Item 3).

CORRECTIVE ACTION

a. Replace coupler valve (Figure 5, Item 1) (WP 0012).

b. If leakage continues, notify Unit Maintenance.

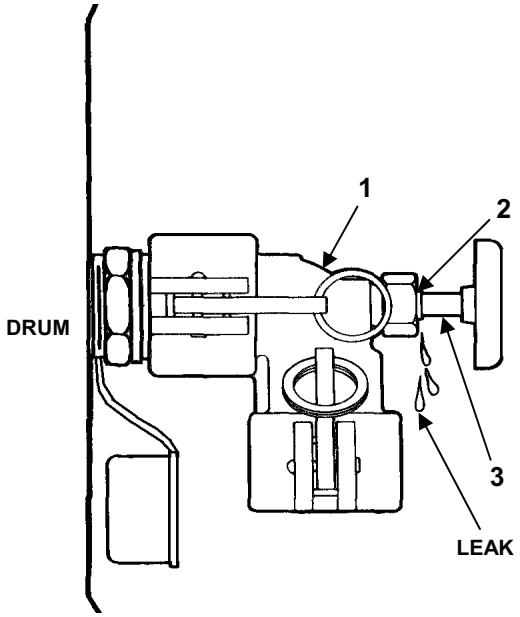

Figure 5.

SYMPTOM

Leak in drum body.

MALFUNCTION

Puncture and/or leak in drum body.

CORRECTIVE ACTION

Check size of puncture hole.

STEP 1. If hole is 3/8 inch diameter or smaller, reference WP 0013.

STEP 2. If hole is larger than 3/8 inch in diameter, send damaged drum to Unit Maintenance.

END OF WORK PACKAGE

CHAPTER 4

UNIT TROUBLESHOOTING
FOR
DRUM, FABRIC, COLLAPSIBLE, DRINKING WATER,
500 GALLON CAPACITY

UNIT MAINTENANCE
DRUM, FABRIC, COLLAPSIBLE, DRINKING WATER, 500 GALLON CAPACITY
UNIT TROUBLESHOOTING PROCEDURES

INITIAL SETUP:

References:
WP 0011
WP 0012
WP 0015
WP 0016
WP 0017

TROUBLESHOOTING PROCEDURE

SYMPTOM

Liquid has unusual odor.

WARNING

Check whether drum has been used with any liquid other than drinking water. Failure to check drum could lead to sickness or death. If there is any question about the quality of the water, do not use the drum.

MALFUNCTION

It is determined during PMCS (WP 0011, Table 1) that the drum has been used for any liquid other than drinking water or it is suspected that drinking water may be contaminated.

NOTE

Once drum has been used for any type of fuel, it can never be used for water again.

CORRECTIVE ACTION

Empty drum contents. Clean drum (WP 0017).

SYMPTOM

Drinking water is leaking from or around coupler valve.

MALFUNCTION

Water leaks from coupler valve (Figure 1, Item 1) to adapter assembly (Figure 1, Item 2) connection.

CORRECTIVE ACTION

STEP 1. Make sure coupler valve (Figure 1, Item 1) is properly closed, locked and installed in place.

STEP 2. If leakage continues, remove coupler valve (Figure 1, Item 1) from adapter assembly (Figure 1, Item 2). If water is leaking from adapter assembly (Figure 1, Item 2), replace adapter assembly (WP 0016).

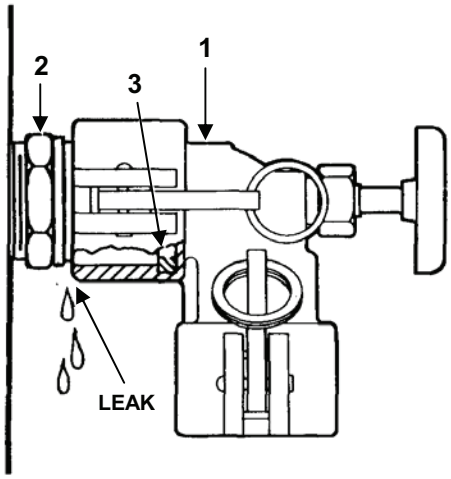

Figure 1.

STEP 3. If adapter assembly (Figure 1, Item 2) is not leaking, replace gasket (Figure 1, Item 3) (WP 0015) on coupler valve (Figure 1, Item 1). Reinstall coupler valve (Figure 1, Item 1) onto adapter assembly (Figure 1, Item 2).

STEP 4. If leakage continues, replace coupler valve (Figure 1, Item 1) (WP 0012).

MALFUNCTION

Coupler valve (Figure 2, Item 1) leaks at valve outlet.

CORRECTIVE ACTION

Replace coupler valve (Figure 2, Item 1) (WP 0012).

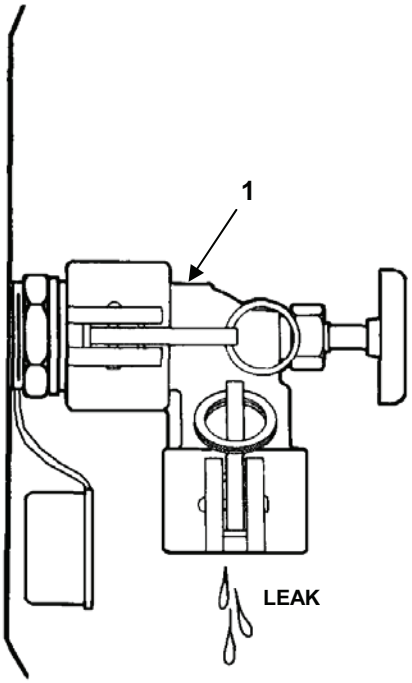

Figure 2.

MALFUNCTION

Coupler valve (Figure 3, Item 1) leaks at packing nut (Figure 3, Item 2) and valve stem (Figure 3, Item 3).

CORRECTIVE ACTION

STEP 1. Tighten packing nut (Figure 3, Item 2).

STEP 2. If leakage continues, replace coupler valve (Figure 3, Item 1) (WP 0012).

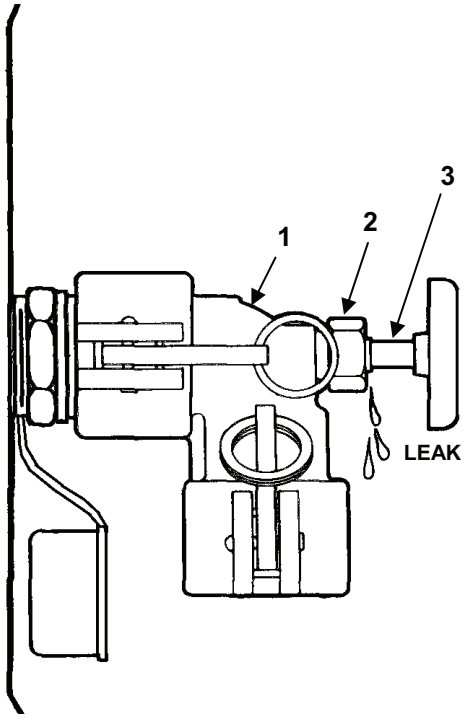

Figure 3.

SYMPTOM

Leakage through adapter assembly.

MALFUNCTION

Check condition of adapter assembly (Figure 4, Item 1).

CORRECTIVE ACTION

Replace adapter assembly (Figure 4, Item 1) (WP 0016).

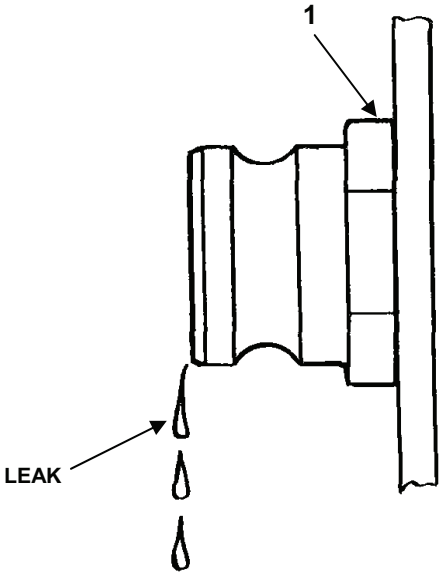

Figure 4.

SYMPTOM

Leakage around outside of adapter assembly.

MALFUNCTION

Check adapter assembly (Figure 4, Item 1) for looseness.

CORRECTIVE ACTION

Tighten adapter assembly (Figure 4, Item 1).

MALFUNCTION

Leakage continues.

CORRECTIVE ACTION

Replace adapter assembly (Figure 4, Item 1) (WP 0016).

MALFUNCTION

Leakage continues.

CORRECTIVE ACTION

If leak continues, notify supervisor.

SYMPTOM

Leakage around bearing plate (Figure 5, Item 1), swivel plate (Figure 5, Item 2) or closure ring (Figure 5, Item 3).

MALFUNCTION

Check for loose screws (Figure 5, Item 4).

CORRECTIVE ACTION

Tighten screws (Figure 5, Item 4) (WP 0017).

MALFUNCTION

Leakage continues.

CORRECTIVE ACTION

If leakage continues, notify supervisor.

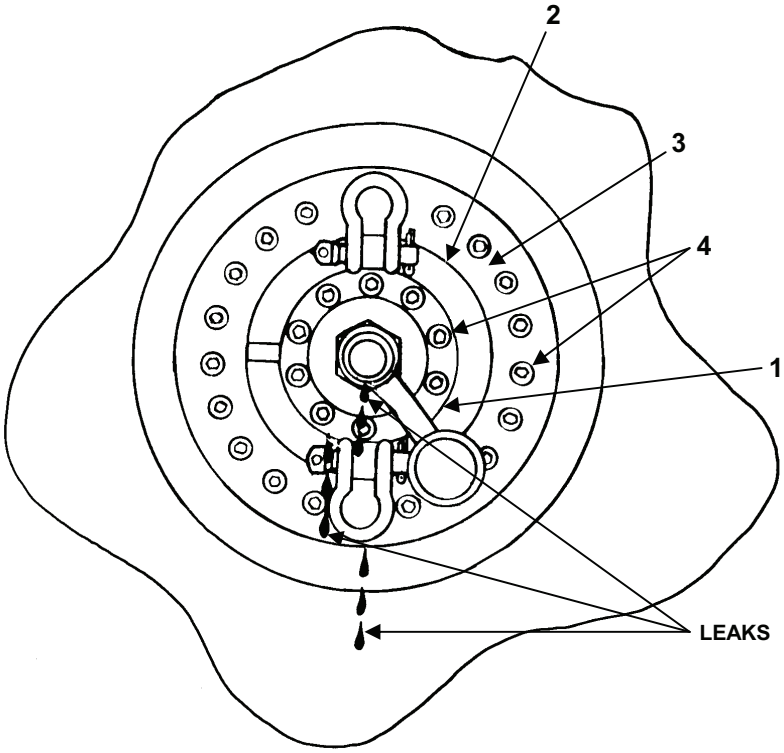

Figure 5.

SYMPTOM

Shackle is damaged or missing.

MALFUNCTION

Check condition of cotter pin (Figure 6, Item 1), shackle screw pin (Figure 6, Item 2) and shackle (Figure 6, Item 3).

CORRECTIVE ACTION

Replace or install parts as required (WP 0017).

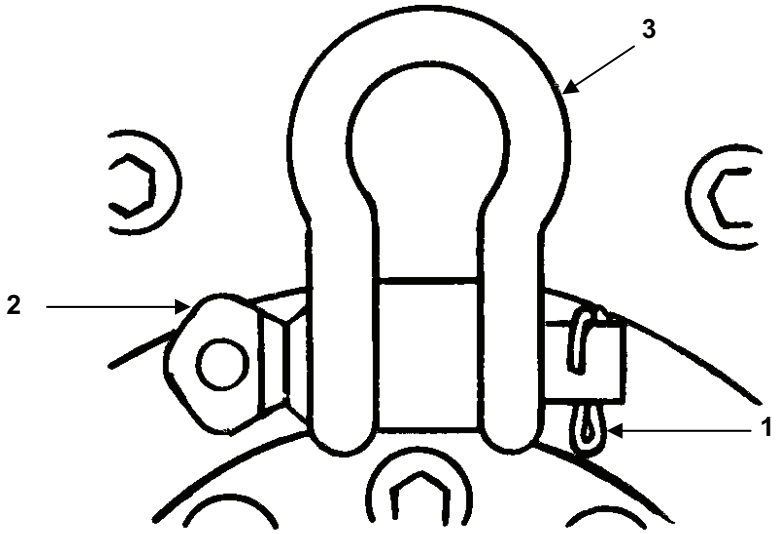

Figure 6.

SYMPTOM

Shackle will not pivot in swivel plate lugs.

MALFUNCTION

Check condition of shackles (Figure 6, Item 3).

CORRECTIVE ACTION

Disassemble and clean shackle screw pin (Figure 6, Item 2) and shackle (Figure 6, Item 3). Replace parts as required (WP 0017).

SYMPTOM

Dust cap is missing or damaged.

MALFUNCTION

Check condition of dust cap (Figure 7, Item 1).

CORRECTIVE ACTION

Replace dust cap (Figure 7, Item 1) if damaged or missing (WP 0016).

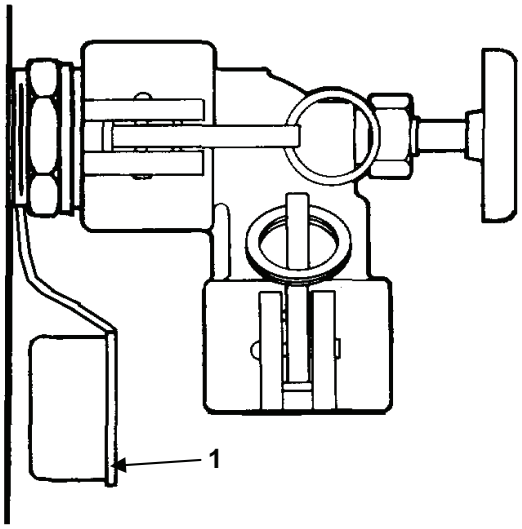

Figure 7.

END OF WORK PACKAGE

CHAPTER 5

OPERATOR MAINTENANCE
FOR
DRUM, FABRIC, COLLAPSIBLE, DRINKING WATER,
500 GALLON CAPACITY

OPERATOR MAINTENANCE
DRUM, FABRIC, COLLAPSIBLE, DRINKING WATER, 500 GALLON CAPACITY
OPERATOR'S PREVENTIVE MAINTENANCE CHECKS AND SERVICES (PMCS) INTRODUCTION

GENERAL

Preventive Maintenance Checks and Services (PMCS) involves systematic caring, inspection, and servicing of equipment to keep it in good condition and prevent breakdowns. WP 0011 PMCS organizes the operator's PMCS tasks in chronological sequence. Service intervals are divided into categories: Before Operation; During Operation; After Operation; and various other checks and services to be performed at prescribed hourly intervals. As the Drum operator, you should:

a. Perform your PMCS as scheduled. Always do your PMCS in the same order, so it gets to be a habit.

b. Do your BEFORE PMCS prior to the Drum leaving its staging/service area or performing its intended mission. Keep in mind the WARNINGS and CAUTIONS.

c. Do your DURING PMCS during Drum operation. Leaks can be spotted only during operation. Keep in mind the WARNINGS and CAUTIONS.

d. Do your AFTER PMCS as soon as possible after the Drum has been taken out of its mission mode or returned to its containment area. Keep in mind the WARNINGS and CAUTIONS.

e. If your equipment fails to operate, perform the operator troubleshooting procedures presented in this manual. Report unresolved maintenance problems to unit maintenance personnel.

FLUID LEAKAGE

It is necessary for you to know how fluid leakage affects the status of the Drum. Wetness around seals, gaskets, fittings or connections indicates leakage. A stain also indicates leakage. If a fitting or connector is loose, tighten it. If it is broken or defective, report it. Following are types/classes of leakage you need to know to be able to determine the status of the Drum. Learn these leakage definitions and remember - when in doubt, notify your supervisor.

NOTE

Equipment operation is allowed with minor leakages (Class I or II). Consideration must be given to fluid capacity in the item/system being checked/inspected. When in doubt, notify your supervisor.

When operating with Class I or II leaks, continue to check fluid levels as required in the PMCS. Class III leaks should be reported immediately to your supervisor.

a. Class I – Seepage of fluid (as indicated by wetness or discoloration) not great enough to form drops.

b. Class II - Leakage of fluid great enough to form drops but not enough to cause drops to drip from item being checked or inspected.

c. Class III - Leakage of fluid great enough to form drops that fall from item being checked or inspected.

LUBRICATION

No lubrication is required for the drum.

OPERATOR MAINTENANCE
DRUM, FABRIC, COLLAPSIBLE, DRINKING WATER, 500 GALLON CAPACITY
OPERATOR'S PREVENTIVE MAINTENANCE CHECKS AND SERVICES (PMCS) PROCEDURES

INITIAL SETUP:

Materials/Parts:
Detergent, Gen. Purpose (WP 0031, Item 4)
Brush, Scrub (WP 0031, Item 1)

PMCS PROCEDURES

Table 1 lists the checks and services required to keep your Drum in good operating condition. PMCS procedures are arranged in a logical sequence requiring minimum time and motion on the part of the person(s) performing them and shall be so arranged that there will be minimum interference between persons performing the checks simultaneously on the Drum. An explanation of each column in provided below.

a. The "Item No." column provides the sequential identification number for each task.

b. The "Interval" column indicates when each check or service is to be performed.

c. The "Item To Be Checked or Serviced" column tells you on which item the procedure is to be performed.

d. The "Procedure" column tells you how to do the required checks and services. Carefully follow these instructions. If you do not have the required tools, or if the procedure tells you to, notify your supervisor.

e. The "Equipment Not Ready/Available If" column tells you the conditions under which your Drum would not be capable of performing its intended mission.

Table 1. Operator's Preventive Maintenance Checks and Services for Drum

Item No.	Interval	Item To Be Checked Or Serviced	Procedure	Equipment Not Ready/ Available If:
			WARNING **This drum is only authorized to be filled with DRINKING WATER. The drum is designed and permanently labeled for use with DRINKING WATER ONLY. Filling the drum with any other liquid may cause sickness or death of crewmembers.**	
1	Before	Drum Assembly	1. Check whether drum has been used with any liquid other than drinking water. Failure to check the drum could lead to sickness or death. 2. Check drum for mold or mildew.	Any liquid that is not known to be water is found in drum. Mold or mildew is found.
2	Before	Coupler Valve	Coupler valve not installed onto drum. 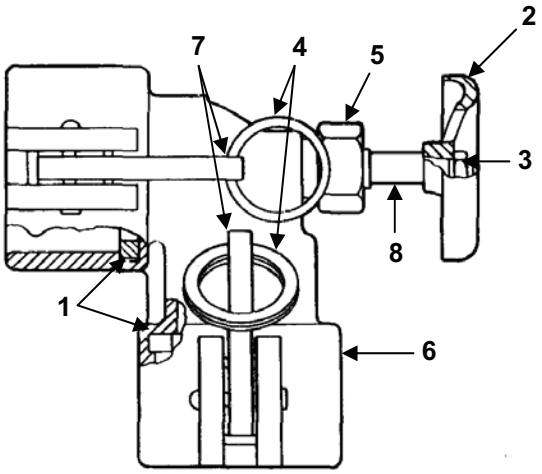 Check both coupler valves for: Missing or damaged gaskets (1). Cracked or damaged handwheel (2). Loose or missing handwheel nut (3). Damaged or missing pull rings (4). Loose packing nut (5). Cracked or broken valve body (6). Excessive wear or looseness of cam arm assemblies (7). Binding or excessive looseness of valve stem (8), by turning handwheel (2). Clean coupler valves with detergent.	Missing or damaged gasket (1), cracked or broken valve body (6), missing or damaged cam arm assembly (7) or if valve stem (8) binds or cannot be rotated.

Table 1. Operator's Preventive Maintenance Checks and Services for Drum (Continued)

Item No.	Interval	Item To Be Checked Or Serviced	Procedure	Equipment Not Ready/ Available If:
			Coupler valve installed onto drum. 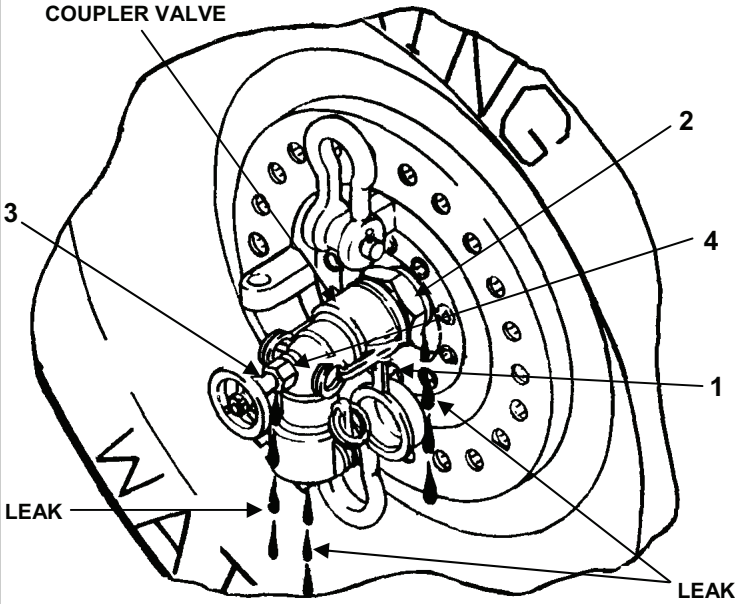 	
			Check both coupler valves for: Proper locking and unlocking operation of cam arm assemblies (1). Leaks where coupler valve connects to adapter assembly (2). Leaks at coupler valve outlet when coupler valve is shut off. Leaks at or around valve stem (3) and packing nut (4). 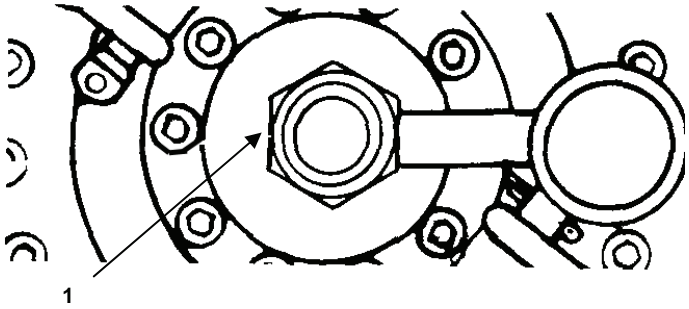 	Cam arm assemblies (1) will not lock properly. Leaks are discovered.
3	Before	Adapter Assembly	Check adapter assemblies (1) on both ends of drum for looseness and leakage.	Adapter assembly (1) leaks or is loose.

Table 1. Operator's Preventive Maintenance Checks and Services for Drum (Continued)

Item No.	Interval	Item To Be Checked Or Serviced	Procedure	Equipment Not Ready/ Available If:
4	Before	Swivel Plate, Bearing Plate and Closure Ring	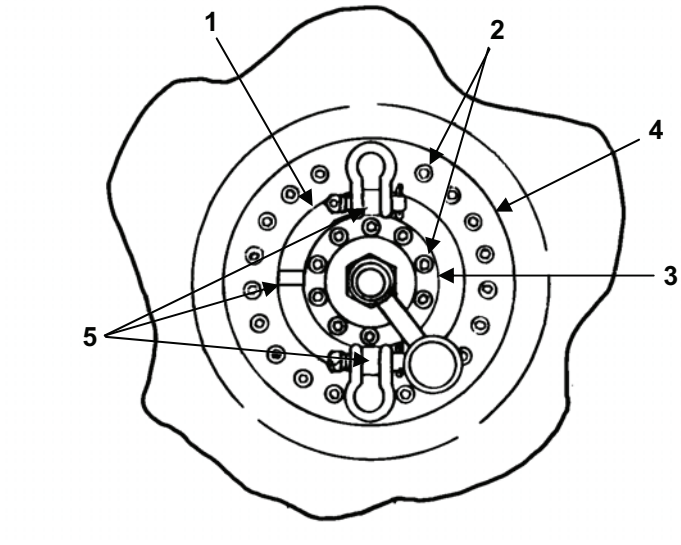 Check both ends of the drum for: Binding swivel plate (1). Loose or missing screws (2) in bearing plate (3) and closure ring (4). Damaged swivel plate lugs (5). Leaks at or around bearing plate (3) and closure ring (4).	Swivel plate (1) is binding or swivel plate lug (5) for tow bar attachment is damaged. Leaks are discovered.
5	Before	Cable Assemblies	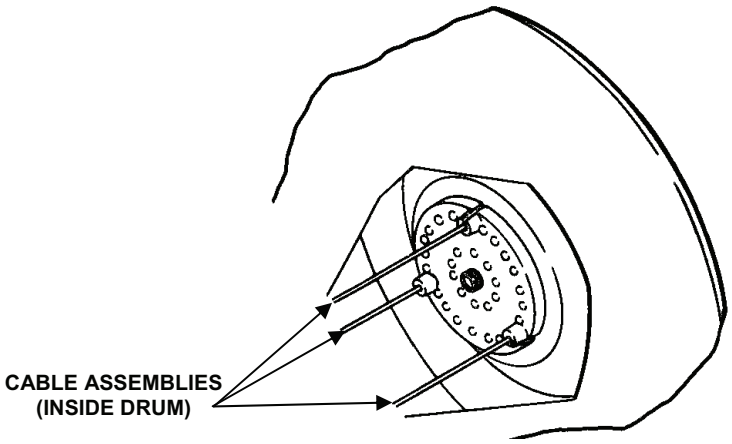 Check whether drum assembly is misshapen or distorted, indicating damaged cable assemblies.	Drum assembly is misshapen or distorted.

Table 1. Operator's Preventive Maintenance Checks and Services for Drum (Continued)

Item No.	Interval	Item To Be Checked Or Serviced	Procedure	Equipment Not Ready/ Available If:
6	Before	Drum Body	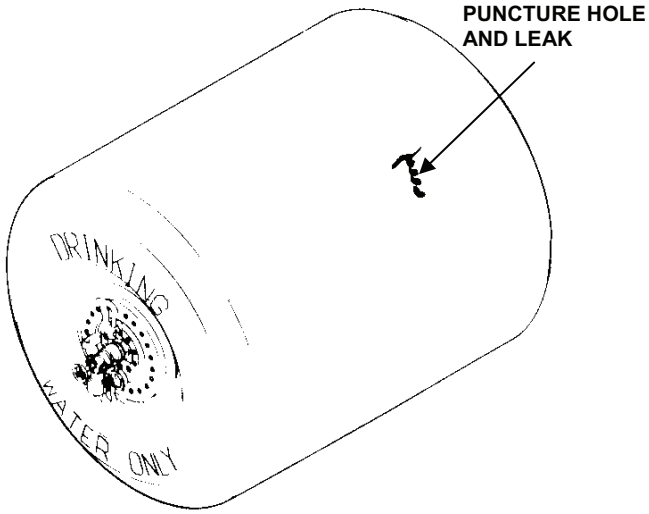 Check entire drum body surface for punctures and leaks coming from puncture holes.	Drum has punctures.
7	Before	Shackle, Shackle Screw Pin & Cotter	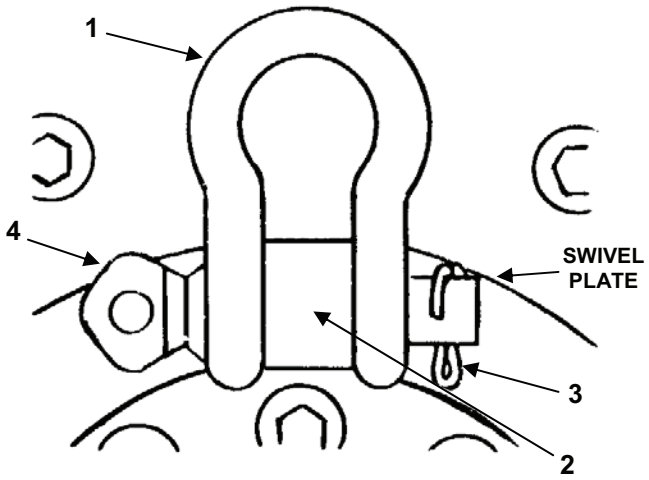 Check all four shackle assemblies for: Damaged or missing shackle (1). Shackle should pivot easily in swivel plate lugs (2). Missing cotter pin (3) in shackle screw pin (4). Missing shackle screw pin (4) or screw pin with damaged threads.	 Shackle assemblies are damaged or missing. Cotter pin (3) missing.

Table 1. Operator's Preventive Maintenance Checks and Services for Drum (Continued)

Item No.	Interval	Item To Be Checked Or Serviced	Procedure	Equipment Not Ready/ Available If:
			WARNING **This drum is only authorized to be filled with DRINKING WATER. The drum is designed and permanently labeled for use with DRINKING WATER ONLY. Filling the drum with any other liquid may cause sickness or death of crewmembers.**	
8	During	Drum Assembly	Check whether drum has been used with any other liquid than drinking water. Failure to check the drum could lead to sickness or death.	Any liquid that is not known to be water is located in drum.
9	During	Coupler Valve	Coupler valve not installed onto drum. 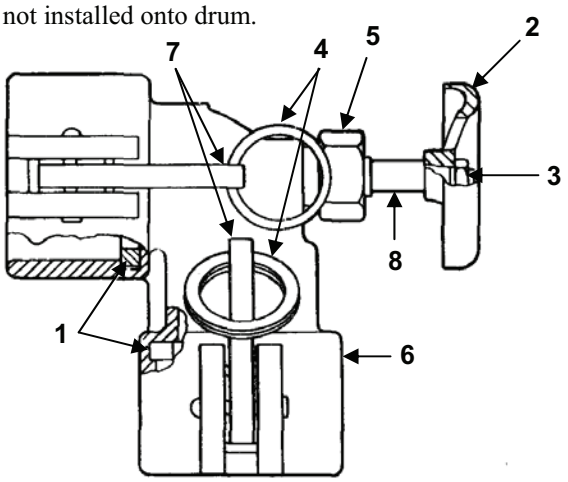 Check both coupler valves for excess wear or looseness of cam arm assemblies (7). Check for binding or excess looseness of valve stem (8) by turning handwheel (2).	Cam arm assembly (7) is missing or damaged. Valve stem (8) binds or cannot be rotated.

Table 1. Operator's Preventive Maintenance Checks and Services for Drum (Continued)

Item No.	Interval	Item To Be Checked Or Serviced	Procedure	Equipment Not Ready/ Available If:
			Coupler valve installed onto drum. 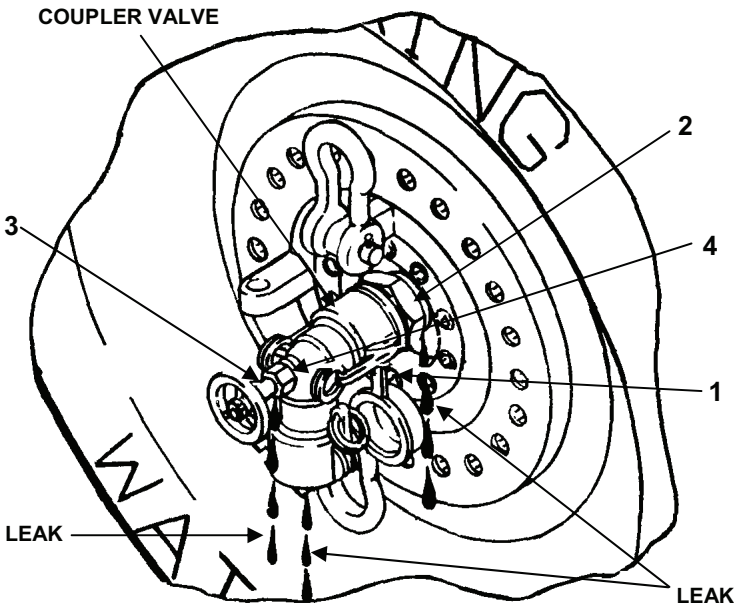 Check both coupler valves for: Proper locking and unlocking operation of cam arm assemblies (1) when installing or removing coupler valve from adapter assembly (2) or dispensing hose. Leaks where coupler valve connects to adapter assembly (2). Leaks at coupler valve outlet when coupler valve is shut off. Leaks at or around valve stem (3) and packing nut (4). 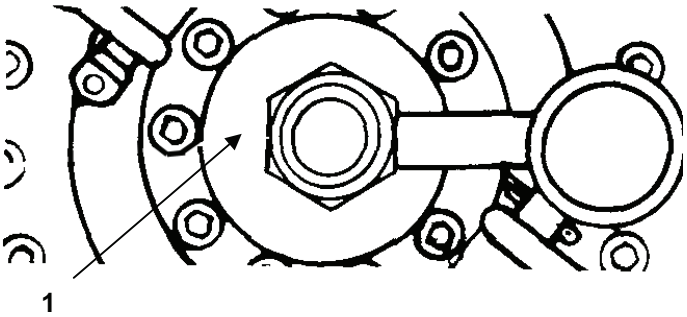 	Cam arm assemblies (1) will not properly lock coupler valve in place. Leaks are discovered.
10	During	Adapter Assembly	Check adapter assemblies (1) on both ends of drum for looseness and leakage.	Adapter assembly (1) leaks or is loose.

Table 1. Operator's Preventive Maintenance Checks and Services for Drum (Continued)

Item No.	Interval	Item To Be Checked Or Serviced	Procedure	Equipment Not Ready/ Available If:
11	During	Swivel Plate, Bearing Plate and Closure Ring	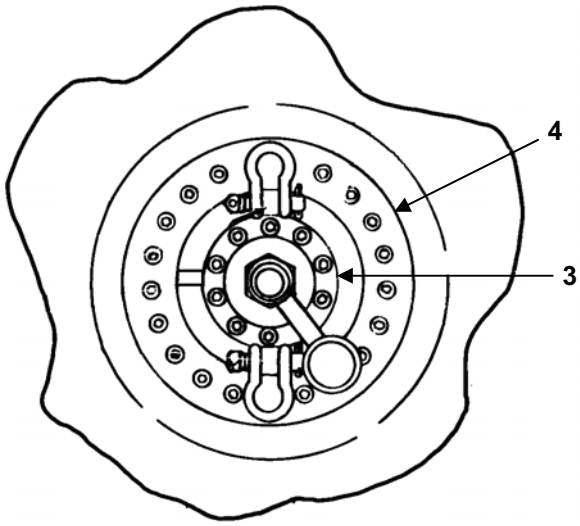	
			Check both ends of the drum for leaks at or around bearing plate (3) and closure ring (4).	Leaks are discovered.
12	During	Cable Assemblies	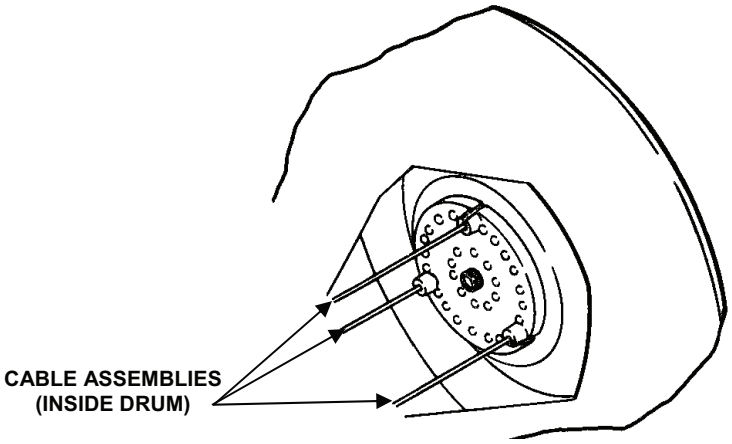	
			Check whether drum assembly is misshapen or distorted indicating damaged cable assemblies.	Drum assembly is misshapen or distorted.

Table 1. Operator's Preventive Maintenance Checks and Services for Drum (Continued)

Item No.	Interval	Item To Be Checked Or Serviced	Procedure	Equipment Not Ready/ Available If:
13	After	Coupler Valve	Coupler valve installed onto drum. 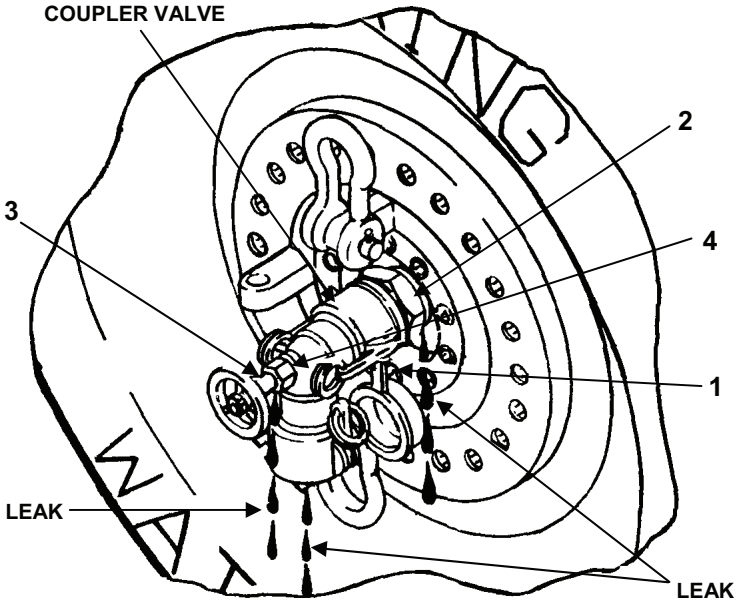 Check both coupler valves for: Proper locking and unlocking operation of cam arm assemblies (1) when installing or removing coupler valve from adapter assembly (2) or dispensing hose. Leaks where coupler valve connects to adapter assembly (2). Leaks at or around valve stem (3) and packing nut (4).	Cam arm assemblies (1) will not properly lock coupler valve in place. Any leakage is discovered.
14	After	Adapter Assembly	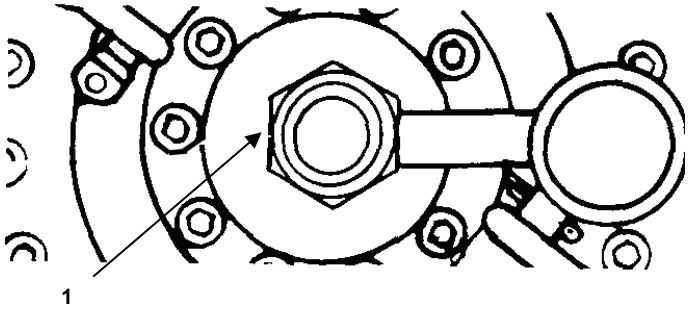 Check adapter assemblies (1) on both ends of drum for looseness and leakage.	Adapter assembly (1) leaks or is loose.

Table 1. Operator's Preventive Maintenance Checks and Services for Drum (Continued)

Item No.	Interval	Item To Be Checked Or Serviced	Procedure	Equipment Not Ready/ Available If:
15	After	Swivel Plate, Bearing Plate and Closure Ring	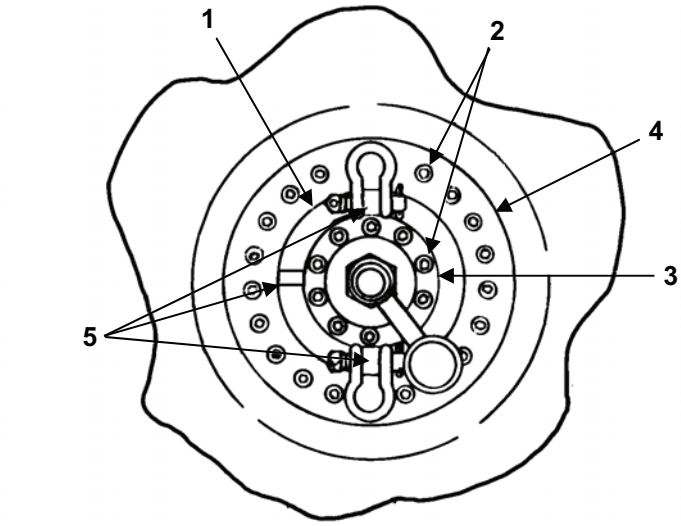 Check both ends of the drum for: Binding swivel plate (1). Loose or missing screws (2) in bearing plate (3) and closure ring (4). Leaks at or around bearing plate (3) and closure ring (4). Damaged swivel plate lugs (5).	Swivel plate (1) binds or swivel plate lug (5) for tow bar attachment is damaged. Leaks are discovered.
16	After	Cable Assemblies	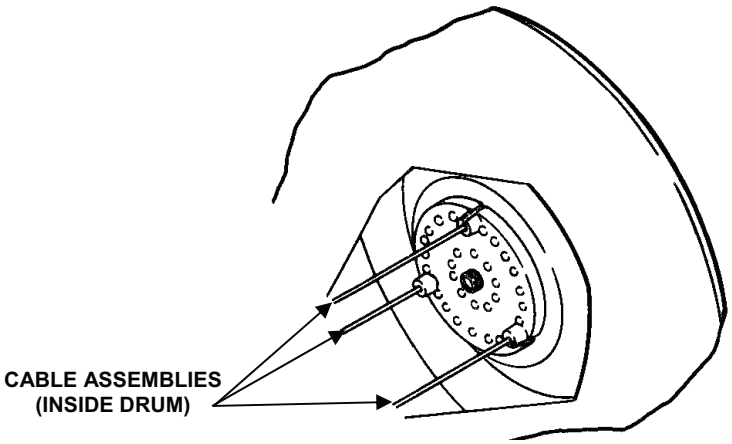 Check whether drum assembly is misshapen or distorted indicating damaged cable assemblies.	Drum assembly is misshapen or distorted.

Table 1. Operator's Preventive Maintenance Checks and Services for Drum (Continued)

Item No.	Interval	Item To Be Checked Or Serviced	Procedure	Equipment Not Ready/ Available If:
17	After	Drum Body	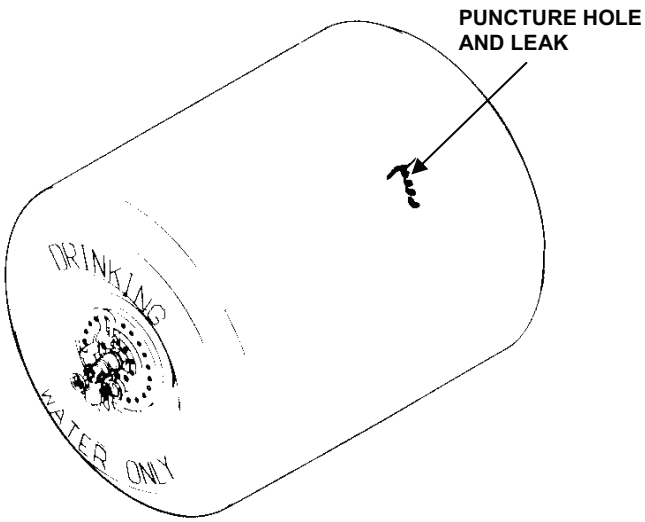 Check entire drum body surface for punctures and leaks coming from puncture holes.	Drum has punctures.
18	After	Shackle, Shackle Screw Pin & Cotter	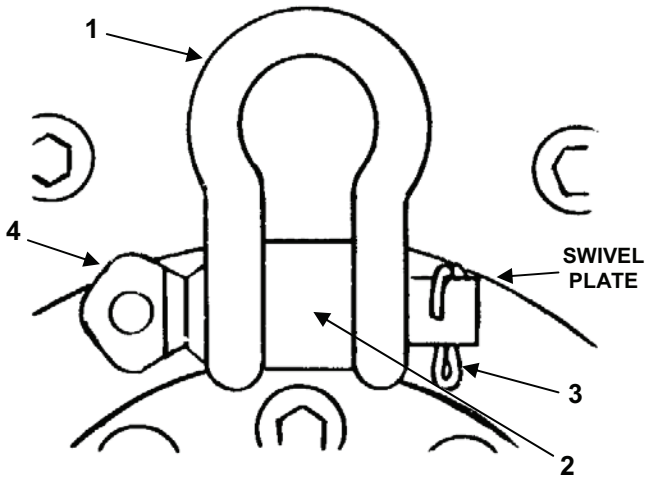 Check all four shackle assemblies for: Damaged or missing shackle (1). Shackle should pivot easily in swivel plate lugs (2). Missing cotter pin (3) in shackle screw pin (4). Missing screw pin (4) or screw pin with damaged threads.	Shackle assemblies are damaged or missing.

Table 1. Operator's Preventive Maintenance Checks and Services for Drum (Continued)

Item No.	Interval	Item To Be Checked Or Serviced	Procedure	Equipment Not Ready/ Available If:
19	After	Dust Cap	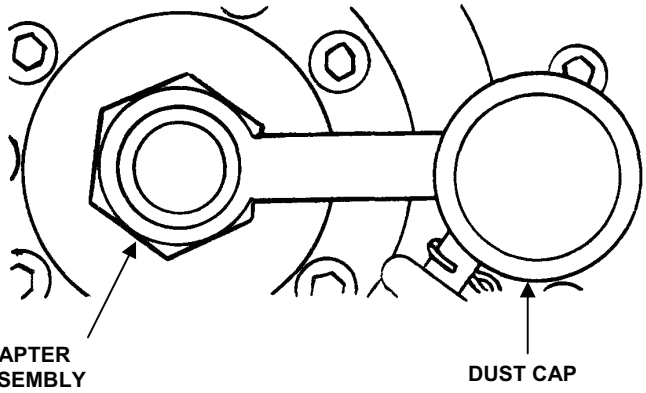 Check for cracks, broken cap and damaged or broken strap or loop.	

END OF WORK PACKAGE

OPERATOR MAINTENANCE
DRUM, FABRIC, COLLAPSIBLE, DRINKING WATER, 500 GALLON CAPACITY
REMOVE/INSTALL COUPLER VALVE

INITIAL SET-UP:

Tools:
None

Equipment Condition:
Drum drained (WP 0005).

NOTE

Procedures are identical for the coupler valve located on both ends of the drum.

REMOVAL

1. Pull out cam arms (Figure 1, Item 1) to unlock coupler valve (Figure 1, Item 2).
2. Slide coupler valve (Figure 1, Item 2) off of adapter assembly (Figure 1, Item 3).
3. Place dust cap (Figure 1, Item 4) on adapter assembly (Figure 1, Item 3).

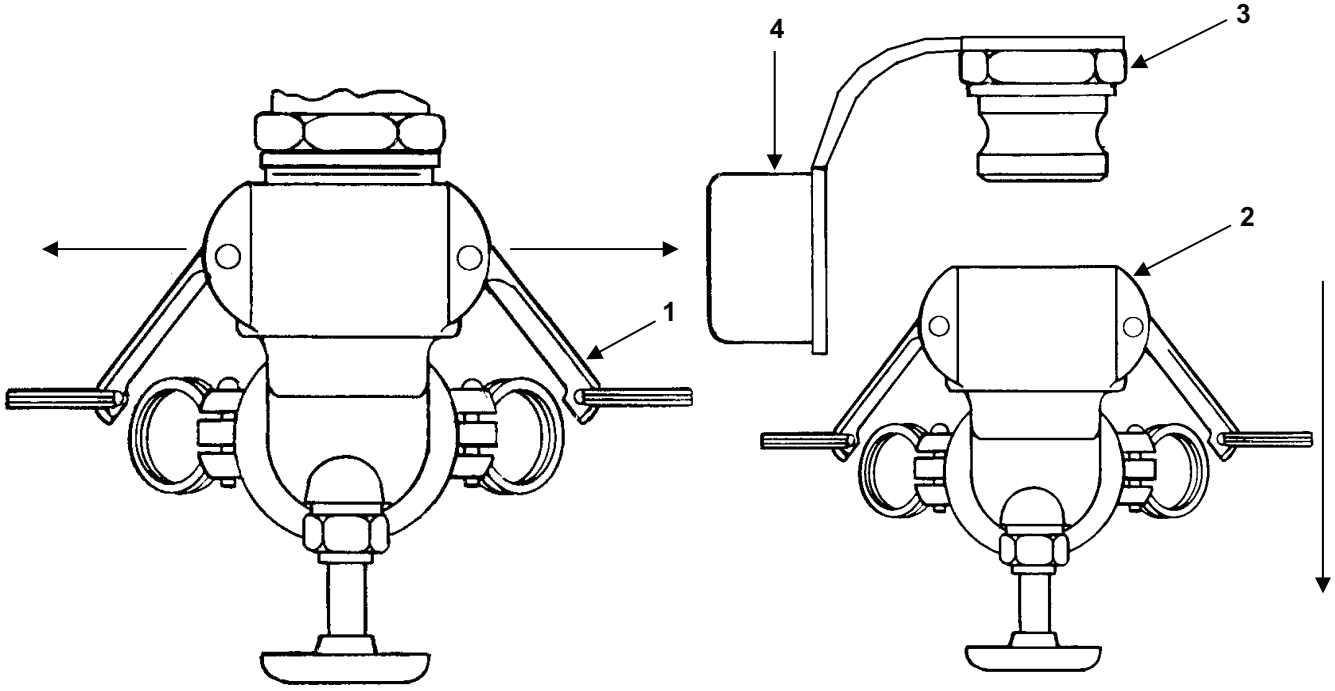

Figure 1. Coupler Valve Removal.

INSTALLATION

1. Remove dust cap (Figure 2, Item 4) from adapter assembly (Figure 2, Item 3).

2. Slide coupler valve (Figure 2, Item 2) all the way onto adapter assembly (Figure 2, Item 3).

3. Push in cam arms (Figure 2, Item 1) to lock coupler valve (Figure 2, Item 2) in place on adapter assembly (Figure 2, Item 3).

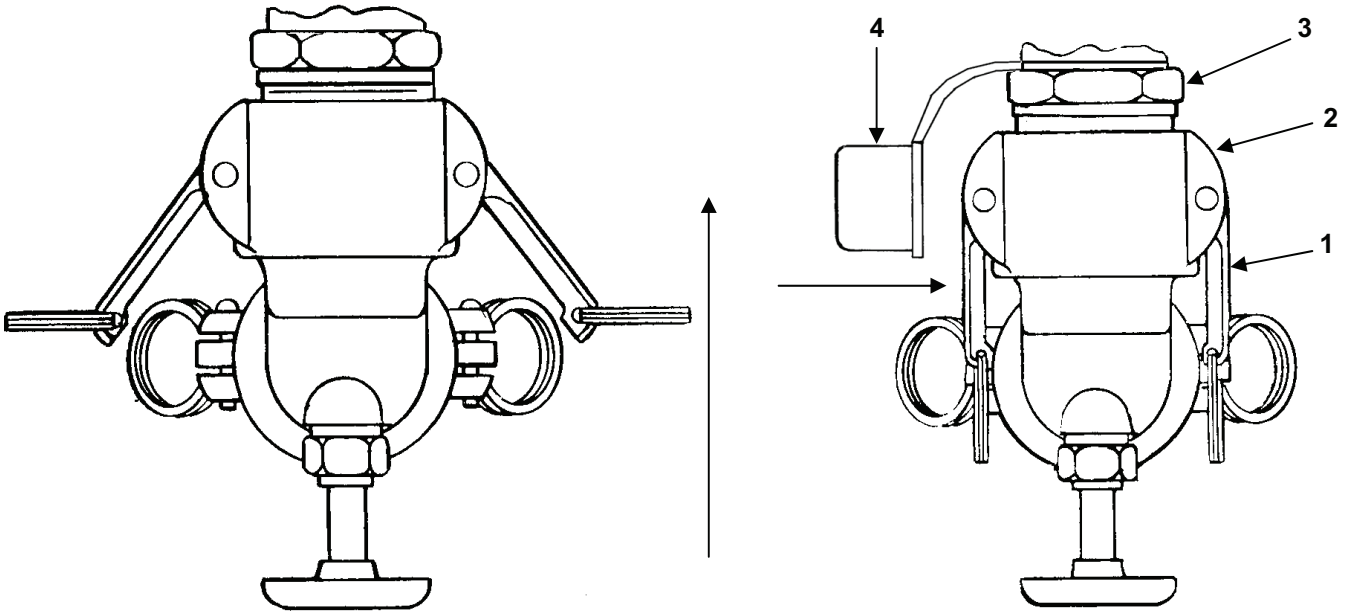

Figure 2. Coupler Valve Installation.

END OF WORK PACKAGE

CHAPTER 6

UNIT MAINTENANCE
FOR
DRUM, FABRIC, COLLAPSIBLE, DRINKING WATER,
500 GALLON CAPACITY

OPERATOR MAINTENANCE
DRUM, FABRIC, COLLAPSIBLE, DRINKING WATER, 500 GALLON CAPACITY
TEMPORARY REPAIR OF DRUM BODY, METHOD 1

INITIAL SET-UP:

Tools:
None

Materials/Parts Required:
Repair Kit (WP 0029, Table 2, Item 2)

CAUTION

Do not tow drum after using Method 1 to repair leaking drum. Towing drum could further damage drum.

NOTE

This procedure only applies if puncture hole in drum body is 3/8 inch diameter or less.

After temporary repair, the drum can only be used until empty.

REPAIR

Method 1:

1. Push a wooden plug into puncture hole, pointed end first.
2. Roll drum over so puncture hole is at top of drum.
3. After drum is empty, notify Unit Maintenance to repair drum using Method 2.

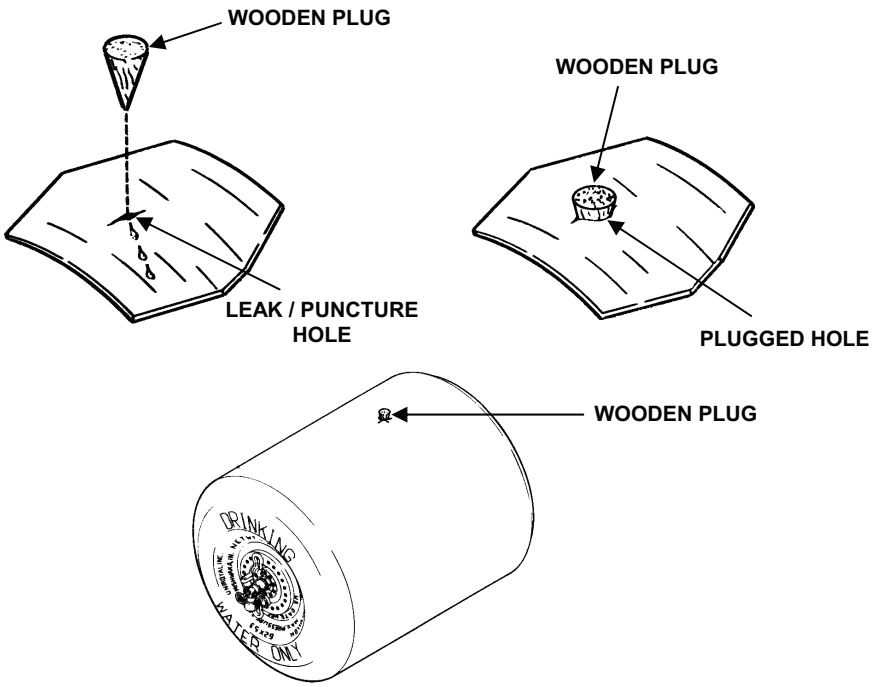

Figure 1. Method 1 Repair

END OF WORK PACKAGE

UNIT MAINTENANCE
DRUM, FABRIC, COLLAPSIBLE, DRINKING WATER, 500 GALLON CAPACITY
SERVICE UPON RECEIPT

INITIAL SETUP:

Tools:
Tool Kit, General Mechanics (WP 0028, Item 1)

Personnel Required:
Five

UNPACKING

The drum is packaged in a container designed for shipment. The base of the container is constructed as a shipping pallet with provisions for insertion of fingers of a fork on materials handling equipment such as a forklift. After unloading, unpack as follows:

1. Remove banding (Figure 1, Item 1) from the crate top and remove crate top (Figure 1, Item 2) from crate (Figure 1, Item 3).

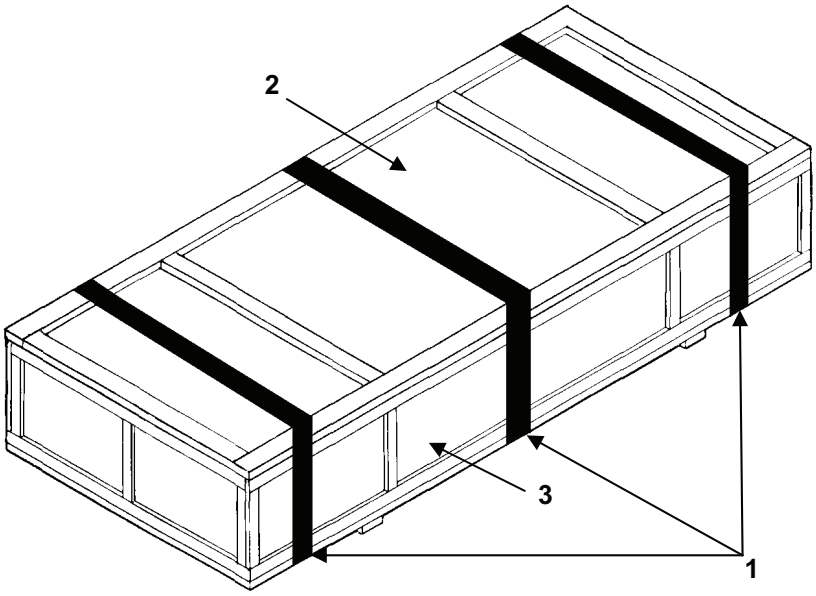

Figure 1. Opening Crate.

2. Remove plastic bag (Figure 2, Item 4) containing cloth bags that contain coupler valves from crate (Figure 2, Item 3).

3. Remove two coupler valves from the two bags (Figure 2, Item 4) and then remove protective material and tape from coupler valves. Save bags and put back into crate.

4. Remove repair kit from cloth bag inside plastic bag (Figure 2, Item 4) and save cloth bag.

WARNING

When lifting drum, always use five personnel to avoid injury. The empty drum weighs 220 lbs.

CAUTION

When using sharp objects, carefully open the plastic bag to avoid damaging the drum.

5. Using five personnel remove drum (Figure 2, Item 5) from crate (Figure 2, Item 3) and place it on a clean surface and remove drum from plastic bag. Save plastic bag.

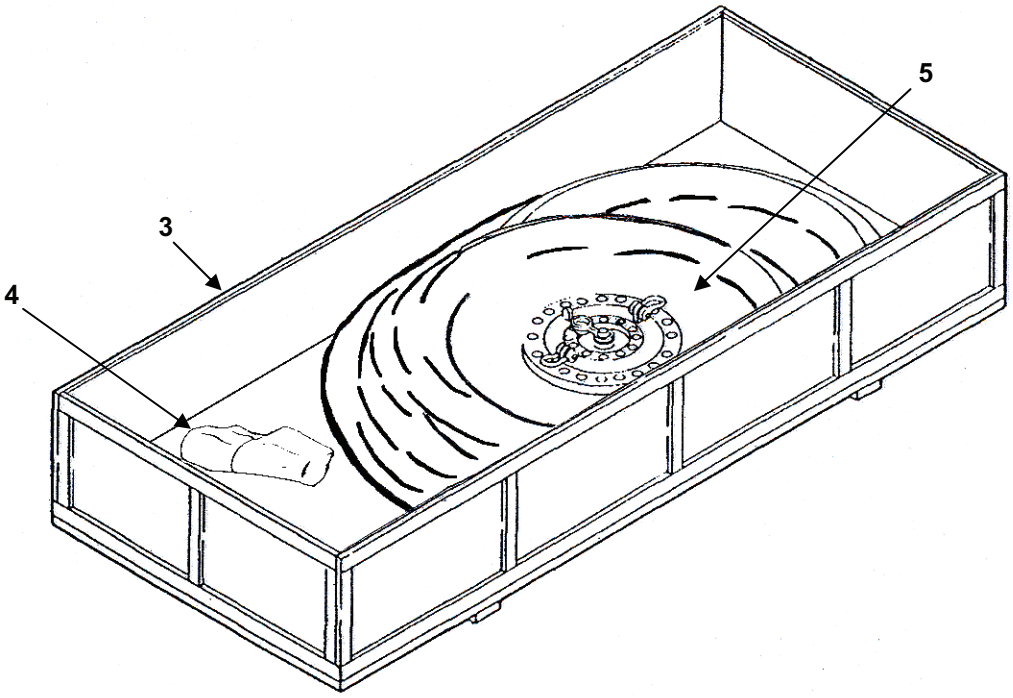

Figure 2. Unpacking Crate.

CHECKING UNPACKED EQUIPMENT

1. Inspect the equipment for damage incurred during shipment. If the equipment has been damaged, report the damage on SF 361, Transportation Discrepancy Report.

2. Check the equipment against the packing slip to see if the shipment is complete. Report all discrepancies in accordance with the instructions of DA PAM 738-750.

3. Inspect both coupler valves (Figure 3, Item 1) for:

   a. Missing gaskets (Figure 3, Item 2).

   b. Binding or stuck valve stem (Figure 3, Item 3); check by turning handwheel (Figure 3, Item 4).

c. Missing, cracked or broken parts.

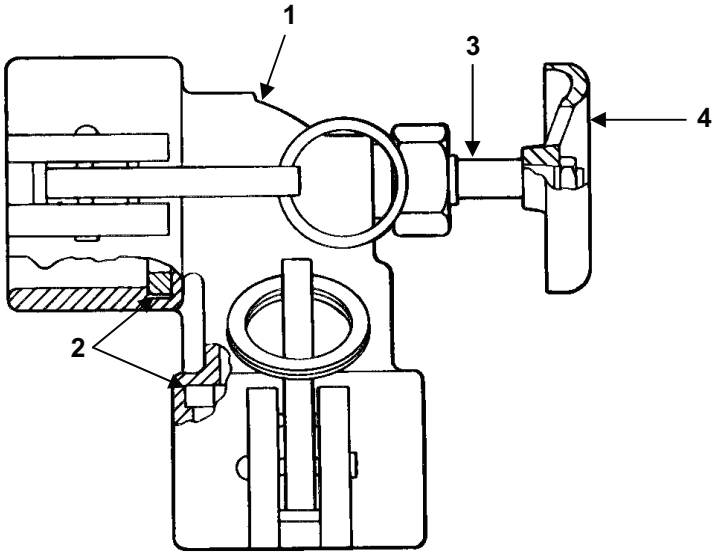

Figure 3. Checking Unpacked Equipment.

4. Refer to Figure 4 and inspect repair kit for:

a. Ripped or dirty pouch (Figure 4, Item 1).

b. Missing, cracked or broken wood plugs (Figure 4, Item 2). Repair kit should contain three wood plugs.

c. Missing patch assemblies (Figure 4, Item 3). Repair kit should contain six patch assemblies. Also check patch assemblies for deteriorated rubber, stripped threads and missing parts.

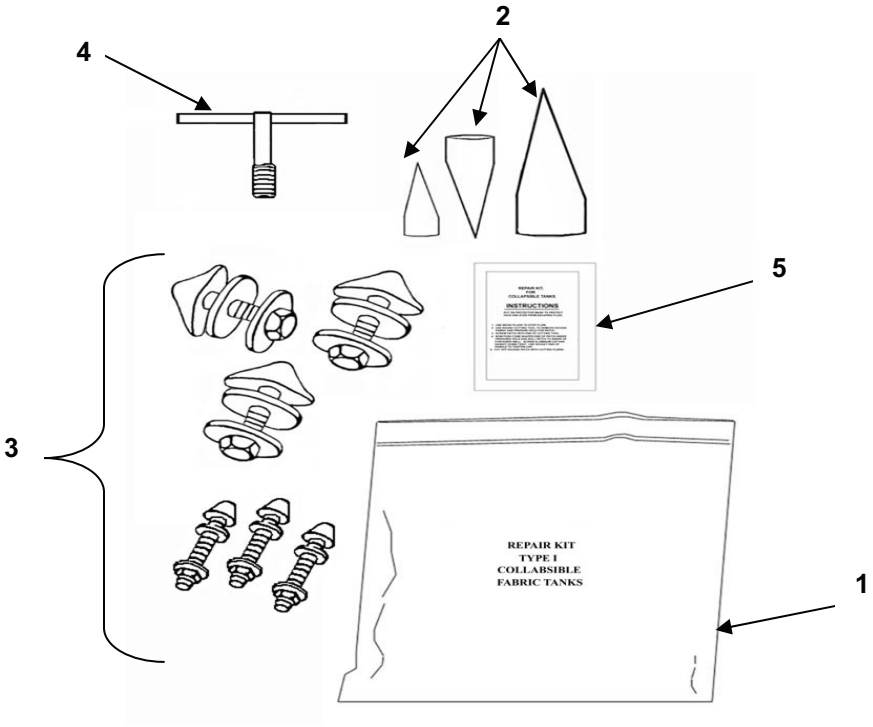

Figure 4. Repair Kit Inspection.

d. Missing or damaged rotary cutter (Figure 4, Item 4).

e. Missing technical sheet (Figure 4, Item 5).

5. Inspect drum for:

NOTE

Inspect both ends of drum.

a. Cuts, tears, and deterioration of drum body (Figure 5, Item 1).

b. Damaged or loose bearing plates (Figure 5, Item 2).

c. Missing or loose screws (Figure 5, Item 3).

d. Damaged or binding swivel plates (Figure 5, Item 4).

e. Damaged or missing shackle (Figure 5, Item 5).

f. Damaged or loose closure ring (Figure 5, Item 6).

g. Damaged or missing dust caps (Figure 5, Item 7).

h. Loose or damaged adapter assemblies (Figure 5, Item 8).

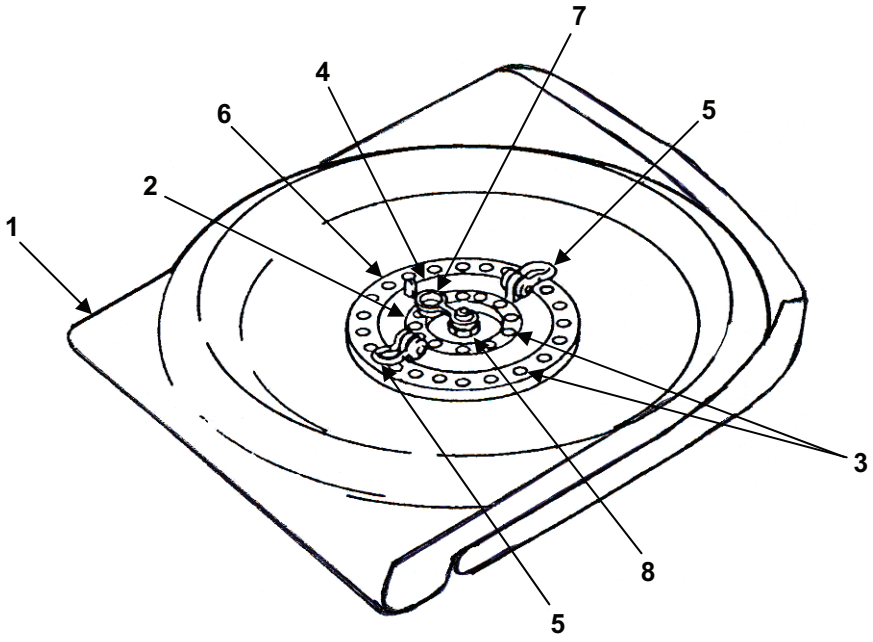

Figure 5. Drum Inspection

END OF WORK PACKAGE

UNIT MAINTENANCE
DRUM, FABRIC, COLLAPSIBLE, DRINKING WATER, 500 GALLON CAPACITY
REMOVE AND INSTALL COUPLER VALVE GASKET

INITIAL SET-UP:

Tools:
Tool Kit, General Mechanic's (WP 0028, Item 1)

Materials/Parts Required:
Gasket (WP 0032, Item 2)

Equipment Condition:
Coupler valve removed from drum (WP 0012).

NOTE

Both ends are identical, repeat procedures for both.

REMOVAL

Remove and discard gaskets (Figure 1, Item 2) from each end of coupler valve (Figure 1, Item 1).

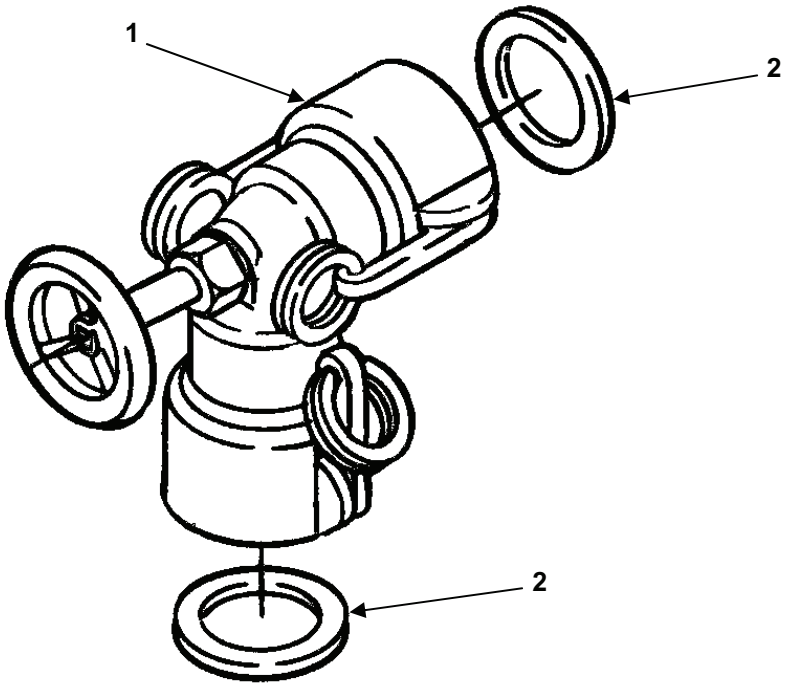

Figure 1. Coupler Valve Gasket Removal.

INSTALLATION

CAUTION

New gaskets must be used.

Install new gasket (Figure 2, Item 2) into each end of coupler valve (Figure 2, Item 1).

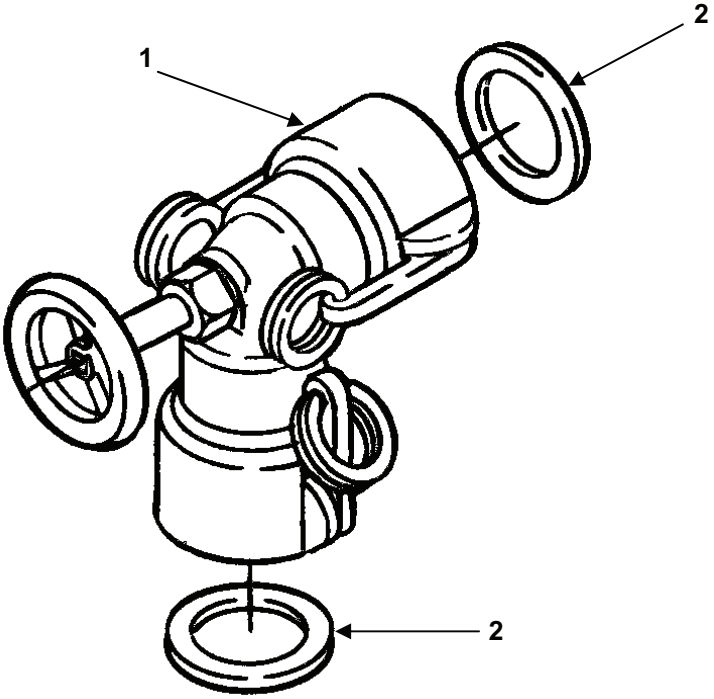

Figure 2. Coupler Valve Gasket Installation.

END OF WORK PACKAGE

UNIT MAINTENANCE
DRUM, FABRIC, COLLAPSIBLE, DRINKING WATER, 500 GALLON CAPACITY
REMOVE/INSTALL ADAPTER ASSEMBLY AND DUST CAP

INITIAL SET-UP:

Tools:
Tool Kit, General Mechanic's (WP 0028, Item 1)

Materials/Parts Required:
Tape, Antiseizing (WP 0031, Item 5)

Equipment Condition:
Drum drained (WP 0005).
Coupler valve removed from drum (WP 0012).

REMOVAL

1. Remove adapter assembly (Figure 1, Item 1) from drum (Figure 1, Item 3).
2. Slide dust cap (Figure 1, Item 2) off adapter assembly (Figure 1, Item 1).

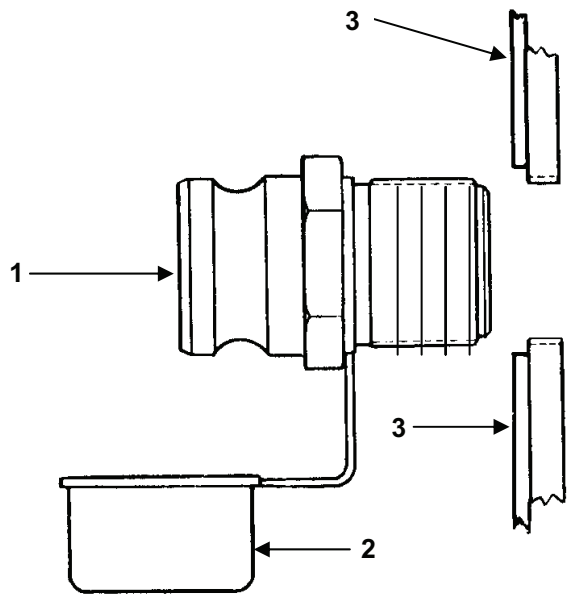

Figure 1. Adapter Assembly

INSTALLATION

1. Slide dust cap (Figure 1, Item 2) onto adapter assembly (Figure 1, Item 1).
2. Install anti-seize tape on threaded end of adapter assembly (Figure 1, Item 1)
3. By hand, install adapter assembly (Figure 1, Item 1) into drum (Figure 1, Item 3), then tighten.

END OF WORK PACKAGE

UNIT MAINTENANCE
DRUM, FABRIC, COLLAPSIBLE, DRINKING WATER, 500 GALLON CAPACITY
REMOVE/INSPECT/CLEAN/INSTALL
SHACKLE, BEARING AND SWIVEL PLATES, WIRE ROPE, DRUM BODY

INITIAL SET-UP:

Tools:
Tool Kit, General Mechanic's (WP 0028, Item 1)
Torque Wrench (WP 0028, Item 2)
Screwdriver Attachment, Socket (WP 0028, Item 3)

References:
WP 0005
WP 0011
WP 0012
WP 0013
WP 0016
WP 0018

Materials/Parts Required:
Cotter Pin (WP 0032, Item 1)
Detergent, Gen. Purpose (WP 0031, Item 4)
Cloth, Abrasive (WP 0031, Item 3)
Chalk (WP 0031, Item 2)
Brush, Scrub (WP 0031, Item 1)

Equipment Condition:
Coupler valve and adapter assembly removed from drum (WP 0012 and WP 0016).

Personnel:
Two

REMOVAL

1. Remove cotter pin (Figure 1, Item 1) from screw pin (Figure 1, Item 2). Discard cotter pin.
2. Remove screw pin (Figure 1, Item 2) from shackle (Figure 1, Item 3). Shackle will come loose from swivel plate lug (Figure 1, Item 4).

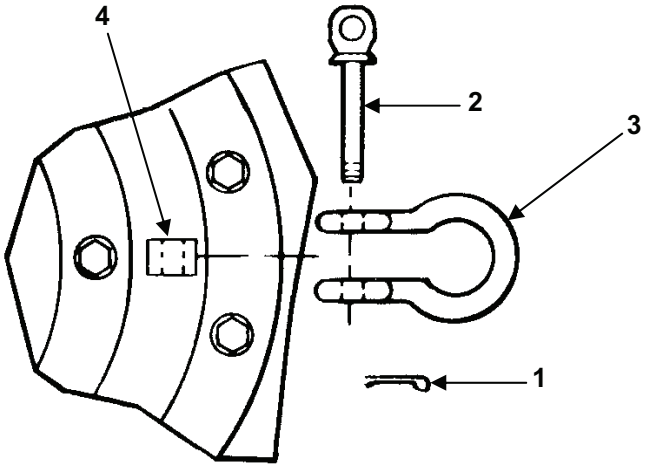

Figure 1. Shackle Removal.

CAUTION

A chalk mark should be placed across both ends of the drum to aid in assembling drum parts and to ensure proper alignment during reassembly. Failure to comply may cause leakage.

3. Place a chalk mark across each end of the drum (Figure 2).

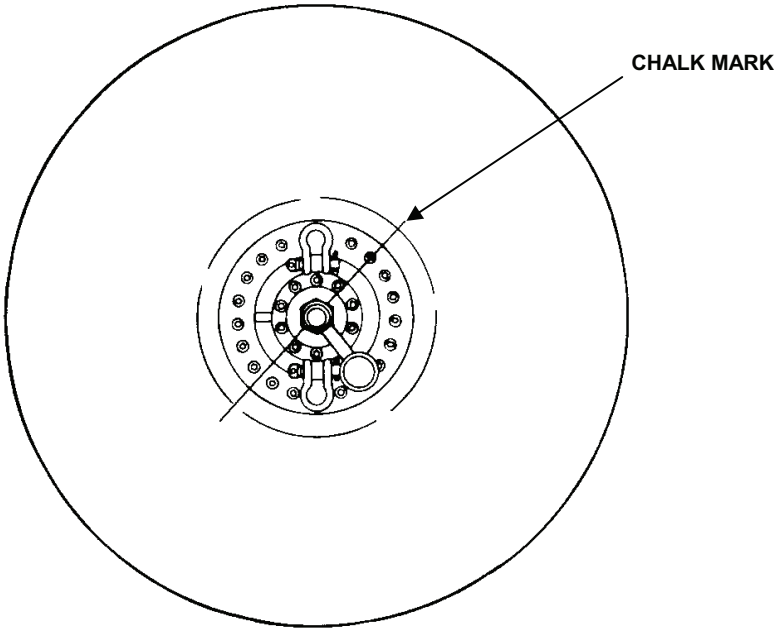

Figure 2. Drum Chalk Mark.

4. Remove ten screws (Figure 3, Item 1) that secure bearing plate (Figure 3, Item 2).

5. Remove bearing plate (Figure 3, Item 2) and swivel plate (Figure 3, Item 3).

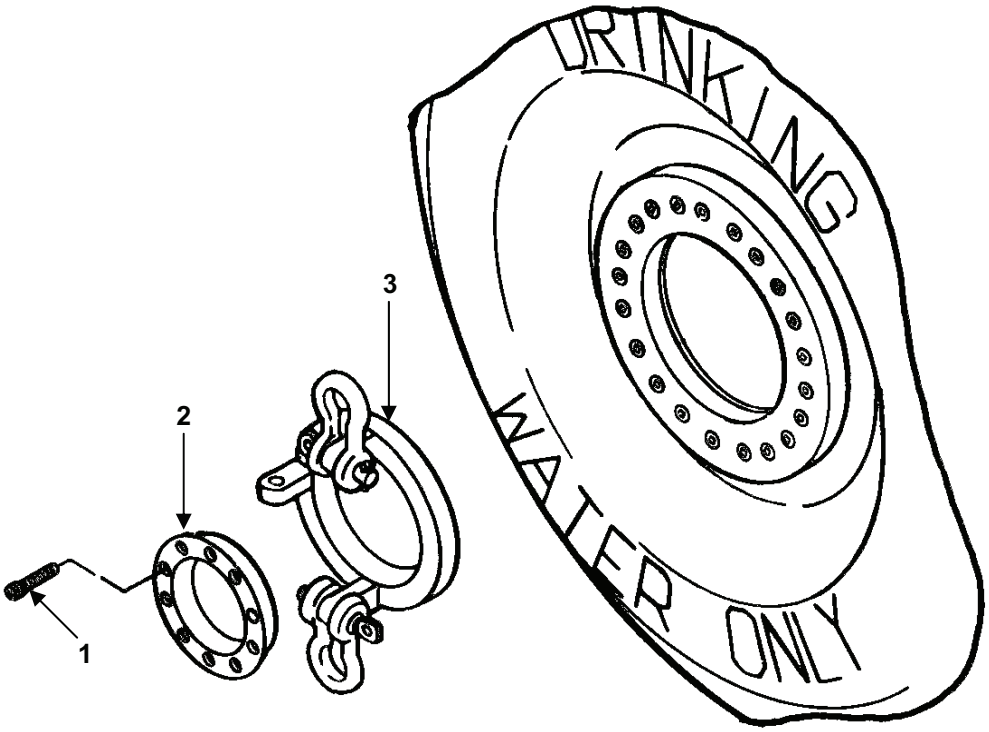

Figure 3. Bearing Plate Screw Removal.

6. Remove 20 screws (Figure 4, Item 1) that secure closure ring (Figure 4, Item 2) leaving one screw in place.

CAUTION

Sometimes the drum body will stick to the closure ring. To avoid damaging the drum body, use care when removing closure ring.

Do not allow inside plate to drop inside of drum. Damage to the drum body could occur.

7. Hold the inside plate so that it does not drop inside of drum. Remove remaining screw (Figure 4, Item 1) and gently place the inside plate in the drum. Carefully remove closure ring (Figure 4, Item 2).

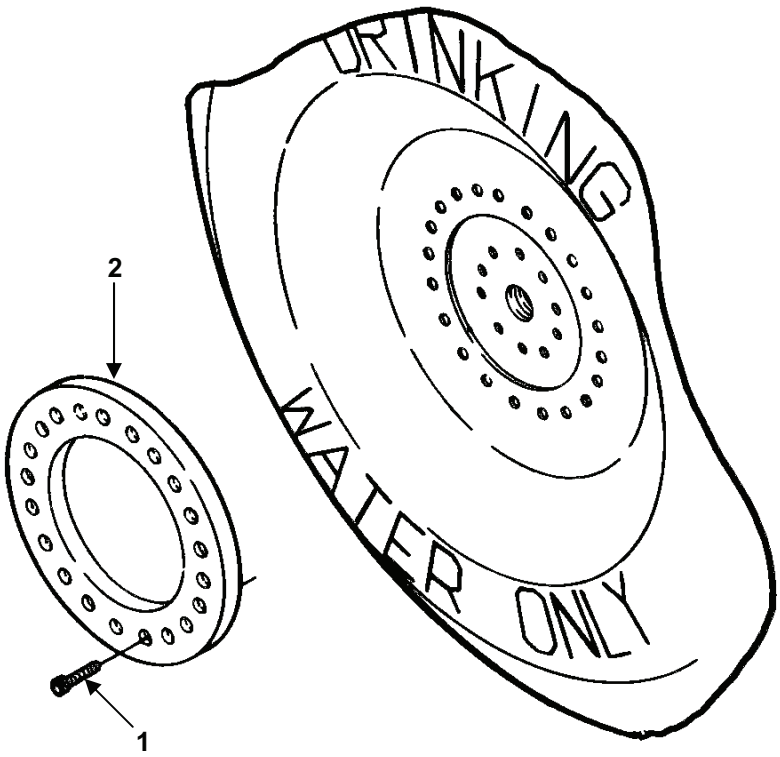

Figure 4. Closure Ring Removal.

8. Reach inside drum body (Figure 5, Item 1) and disconnect three cable assemblies (Figure 5, Item 2) from closure plate (Figure 5, Item 3).

CAUTION

Use care when removing parts from the drum interior. Damage to the drum body could occur.

NOTE

If closure plate is difficult to remove, lubricate plate with non-toxic detergent to assist in removal

9. Rotate closure plate (Figure 5, Item 3) to the vertical position. Push drum body (Figure 5, Item 1) together to elongate opening in the drum and lubricate closure plate (Figure 5, Item 3) with detergent. Remove closure plate (Figure 5, Item 3) from inside drum body (Figure 5, Item 1).

10. Repeat steps 1 through 9 for the other end of drum.

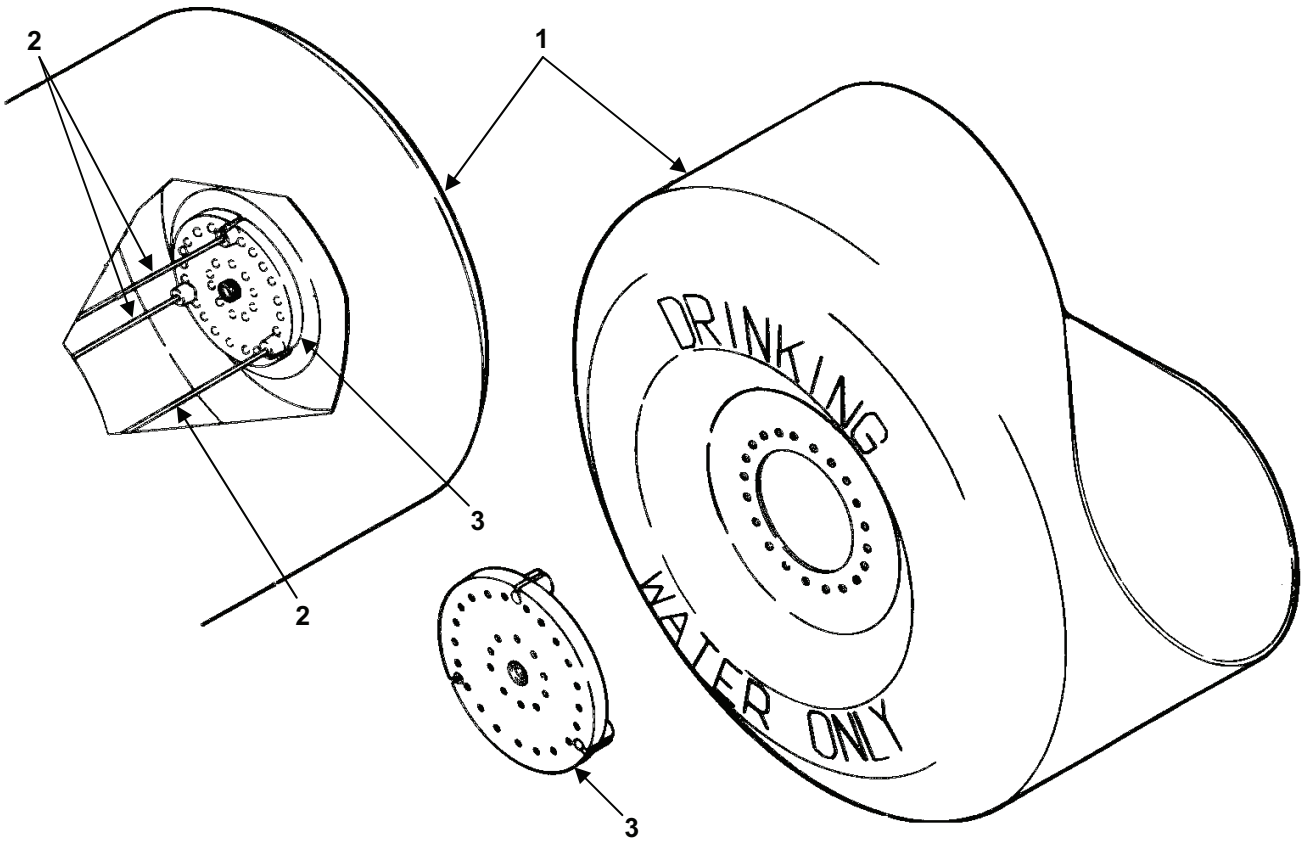

Figure 5. Cable Assembly and Closure Plate Removal.

INSPECTION

1. Check screw pin (Figure 6, Item 2) for distortion, cracks and for damaged threads. Replace screw pin (Figure 6, Item 2) if necessary.

2. Replace cotter pin (Figure 6, Item 1). Check condition of shackle (Figure 6, Item 3). Replace shackle (Figure 6, Item 3) if distorted or cracked.

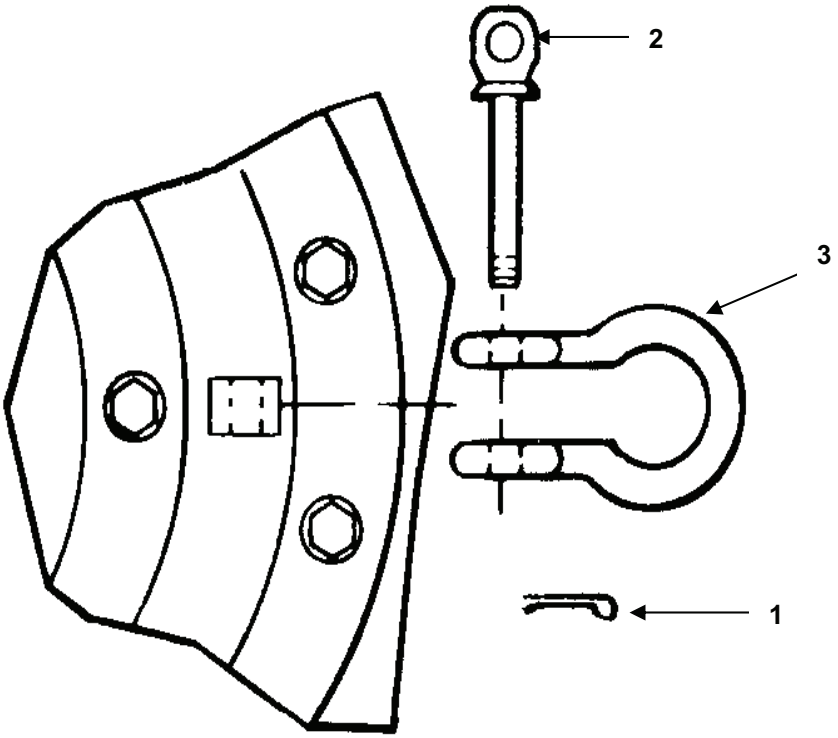

Figure 6. Shackle Inspection.

3. Check screws (Figure 7, Items 1 and 4) for damage.

4. Check the following parts for raised metal, corrosion or damaged painted surfaces: bearing plate (Figure 7, Item 2), swivel plate (Figure 7, Item 3) and closure ring (Figure 7, Item 5).

5. Inspect three cable assemblies (Figure 7, Item 6) for corrosion, raised metal on ends, cable wires protruding from cable assembly ends, snapped or broken wires.

6. Check closure plate (Figure 7, Item 7) for raised metal, corrosion or damaged threaded surfaces.

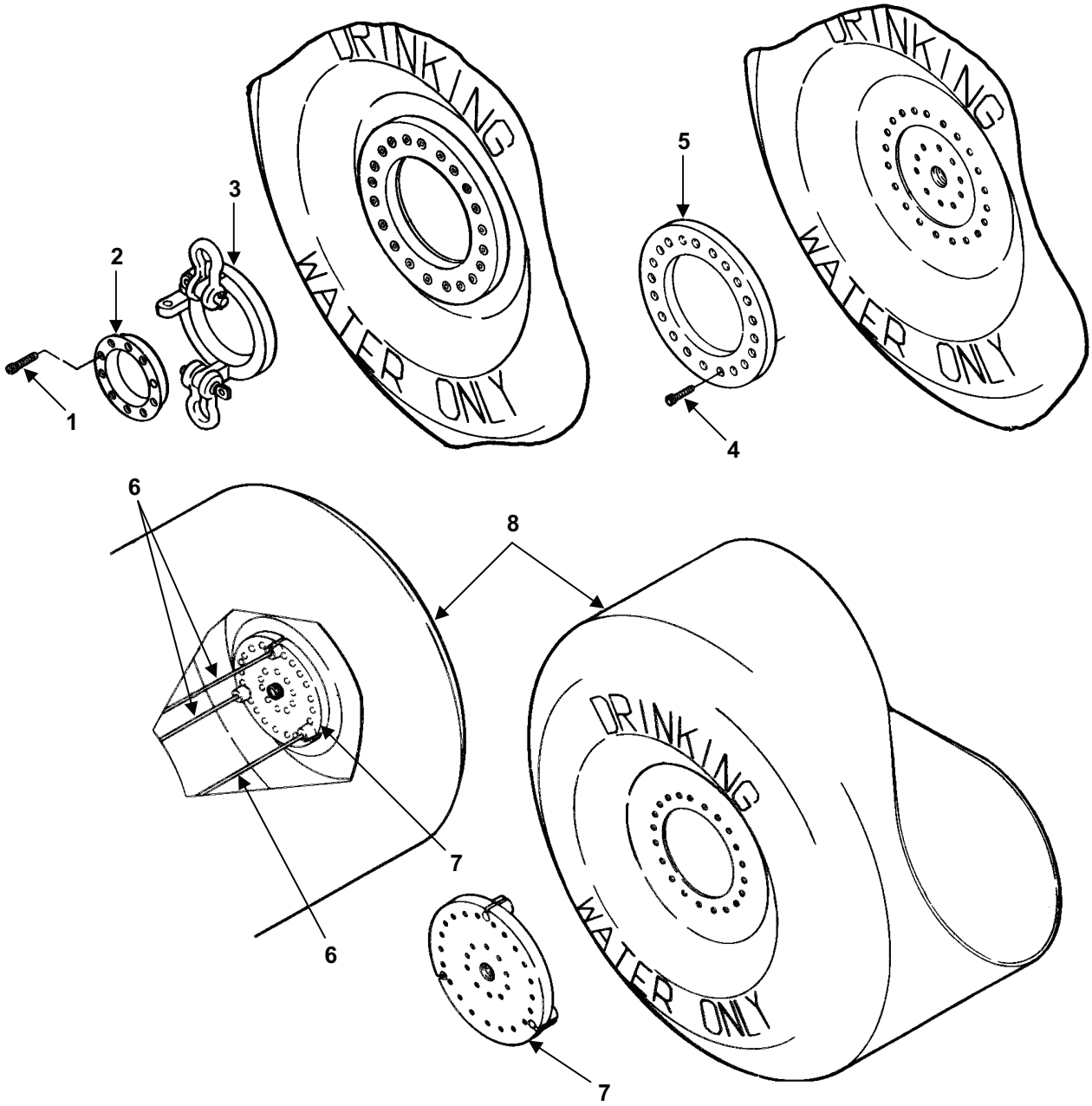

Figure 7. Inspection of Drum End Parts.

7. Check drum body (Figure 7, Item 8) for tears, puncture holes or other damage. For temporary repair, reference (WP 0013) and/or (WP 0018).

CLEANING

Bearing Plate, Swivel Plate, Closure Ring and Closure Plate

1. Use abrasive cloth to remove raised metal or blend in depressions. Smoothness of repaired surfaces should equal undamaged areas of the same functional surface.

2. Remove corrosion with cleaning brush.

Cable Assemblies

1. Remove raised metal and blend in depressions on cable assembly ends using abrasive cloth. Smoothness of repaired surfaces should equal undamaged areas of the same functional surface.

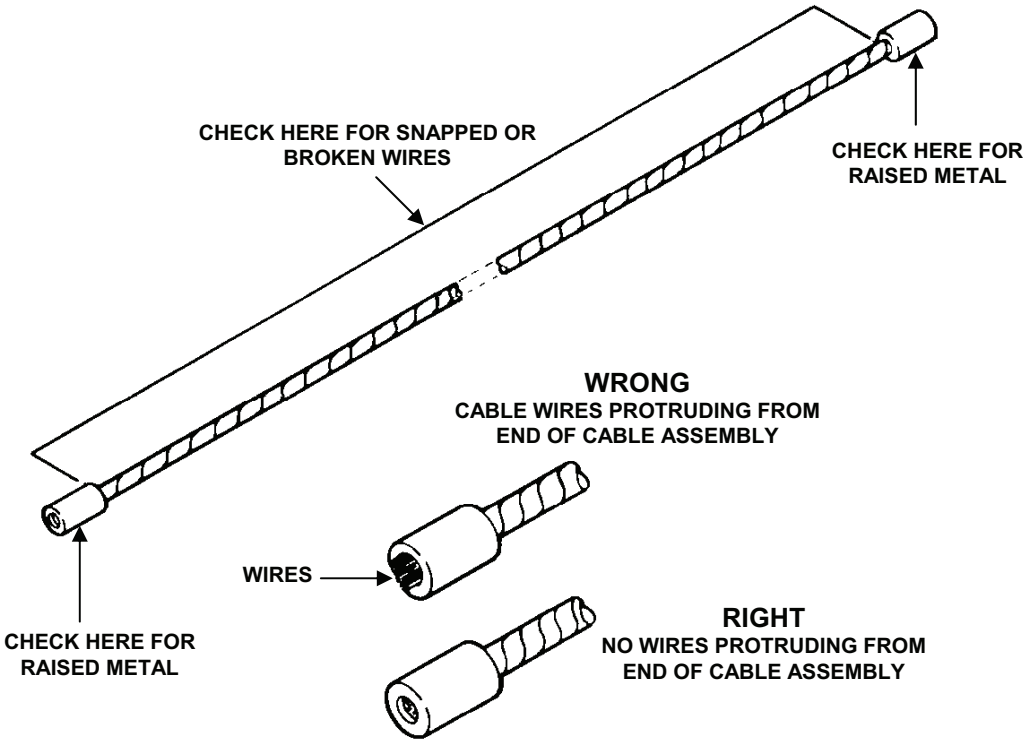

Figure 8. Cable Assembly Cleaning.

2. Using a file, remove cable wires protruding from cable assembly ends. Cable wires shall be even with cable assembly end.

WARNING

All drum parts must be cleaned with a mild, non-toxic detergent and assembled on a clean surface. Remember that the drum will be used to store and dispense drinking water. A dirty or contaminated drum could cause sickness or even death to personnel drinking from it.

Drum

Clean all drum parts with a mild, non-toxic detergent and cleaning brush.

INSTALLATION

NOTES

Clean all parts before assembling.

Assemble parts on a clean surface.

1. Place shackle (Figure 9, Item 3) over swivel plate lug (Figure 9, Item 4) aligning shackle eyelets with hole in swivel plate lug (Figure 9, Item 4).

2. Note that one of the shackle eyelets is threaded and the other is not. Insert screw pin (Figure 9, Item 2) through the shackle eyelet with no threads and then through swivel plate lug (Figure 9, Item 4) hole.

3. Thread screw pin (Figure 9, Item 2) into shackle (Figure 9, Item 3) all the way.

4. Insert new cotter pin (Figure 9, Item 1) into screw pin (Figure 9, Item 2). Bend ends of cotter pin (Figure 9, Item 1) to secure screw pin (Figure 9, Item 2).

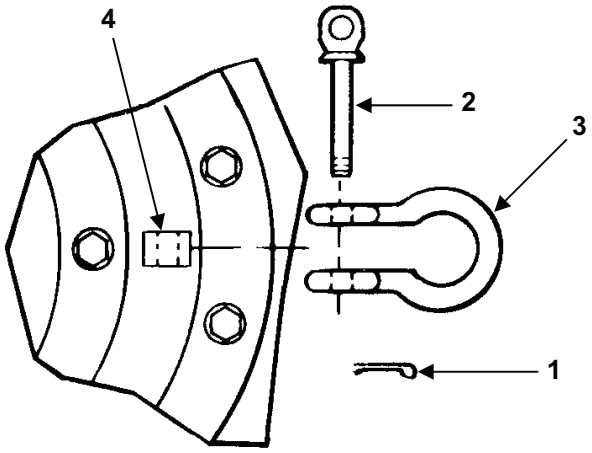

Figure 9. Shackle Installation.

CAUTION

When assembling the drum, it is very important to align chalk marks to prevent twisting cable assemblies. Failure to align chalk marks may cause damage to drum.

5. Unfold and layout drum body (Figure 10, Item 8). Lubricate edge of closure plate (Figure 10, Item 7) with detergent and insert closure plate (Figure 10, Item 7) into drum body (Figure 10, Item 8) by placing cable notch in closure plate on the bottom of the drum body opening.

6. Align chalk marks on closure plate (Figure 10, Item 7) with chalk marks on drum body (Figure 10, Item 8).

7. Attach three cable assemblies (Figure 10, Item 6) to closure plate (Figure 10, Item 7).

8. Place closure ring (Figure 10, Item 5) onto closure plate (Figure 10, Item 7) and align chalk marks.

NOTE

For easy installation of screws in closure plate, install screws in closure plate across from each other until all 21screws are installed.

9. Attach closure ring (Figure 10, Item 5) to closure plate (Figure 10, Item 7) using 21 screws (Figure 10, Item 4).

10. Tighten screws (Figure 10, Item 4) to 45 foot-pounds maximum torque.

11. Place swivel plate (Figure 10, Item 3) on closure plate (Figure 10, Item 7).

12. Attach bearing plate (Figure 10, Item 2) to closure plate (Figure 10, Item 7) with ten screws (Figure 10, Item 1).

13. Tighten screws (Figure 10, Item 1) to 10 foot-pounds maximum torque.

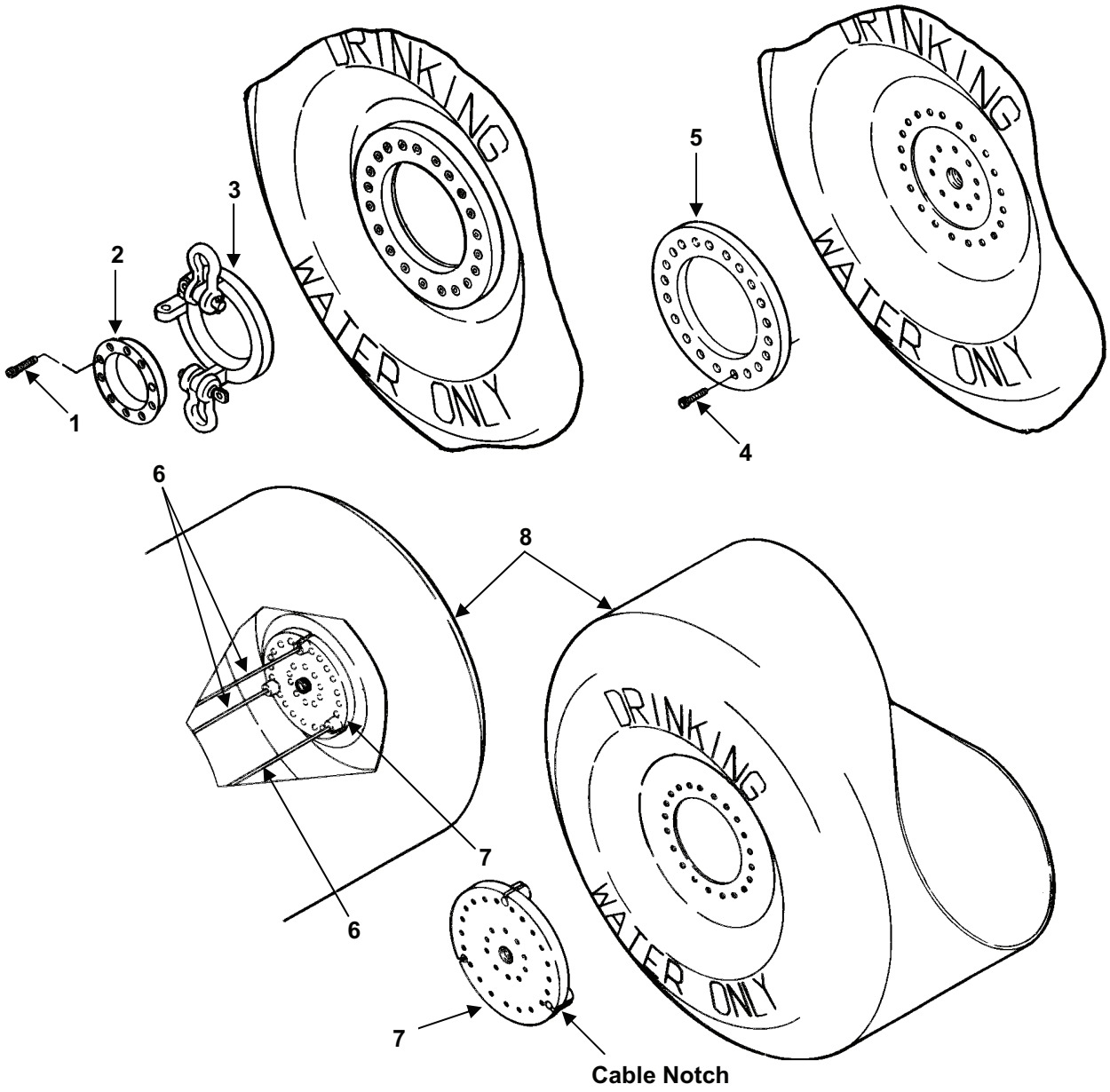

Figure 10. Installation of Drum End Parts.

CAUTION

When assembling the drum, it is very important to align chalk marks to prevent twisting cable assemblies. Failure to comply may cause damage to drum.

14. Repeat INSTALLATION steps 1 through 13 to assemble the opposite end of the drum, then proceed to step 15. Make sure that cable assemblies are not twisted when assembling opposite end of drum.

15. Install both adapter assemblies (WP 0016).

16. Install both coupler valves (WP 0012).

TEST

1. Fill drum with drinking water in accordance with WP 0005.

2. Perform PMCS (WP 0011, Table 1). Check drum for leaks.

END OF WORK PACKAGE

UNIT MAINTENANCE
DRUM, FABRIC, COLLAPSIBLE, DRINKING WATER, 500 GALLON CAPACITY
TEMPORARY REPAIR OF DRUM BODY, METHOD 2

INITIAL SET-UP:

Tools:
Tool Kit, General Mechanic's (WP 0028, Item 1)

Materials/Parts Required:
Repair Kit (WP 0029, Table 2, Item 2)

CAUTION

Do not tow drum after using Method 2 to repair leaking drum. Towing drum could further damage drum.

NOTE

Drum can be refilled after using Method 2 to repair drum.

This procedure only applies if puncture hole in drum body is 3/8 inch diameter or less.

REPAIR

Method 2:

1. Using rotary cutter (Figure 1, Item 1), cut a clean edge around puncture hole (Figure 1, Item 2).

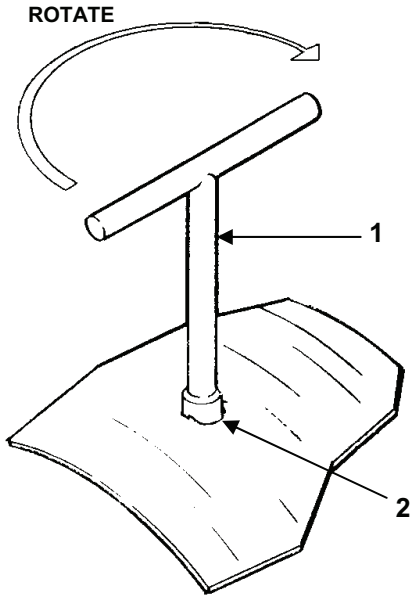

Figure 1. Method 2 Repair, Step 1.

2. Push conical end of a plug assembly (Figure 2, Item 1) through the prepared puncture hole (Figure 2, Item 2).

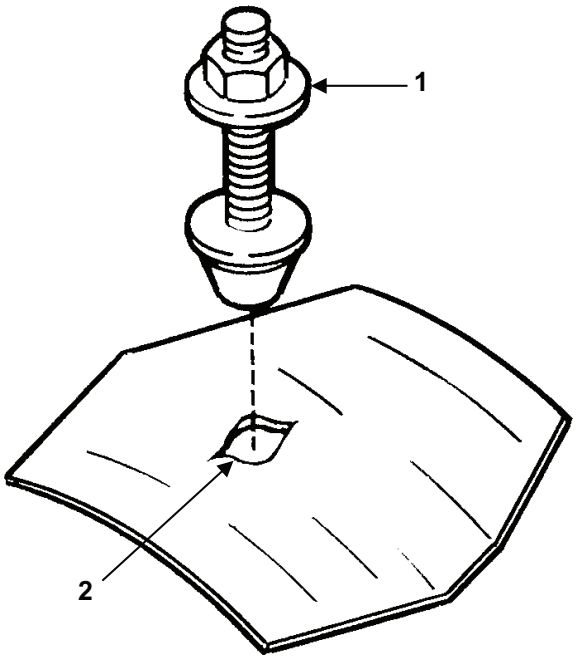

Figure 2. Method 2 Repair, Step 2.

3. Pull plug assembly (Figure 3, Item 1) tight against interior of drum body (Figure 3, Item 2).

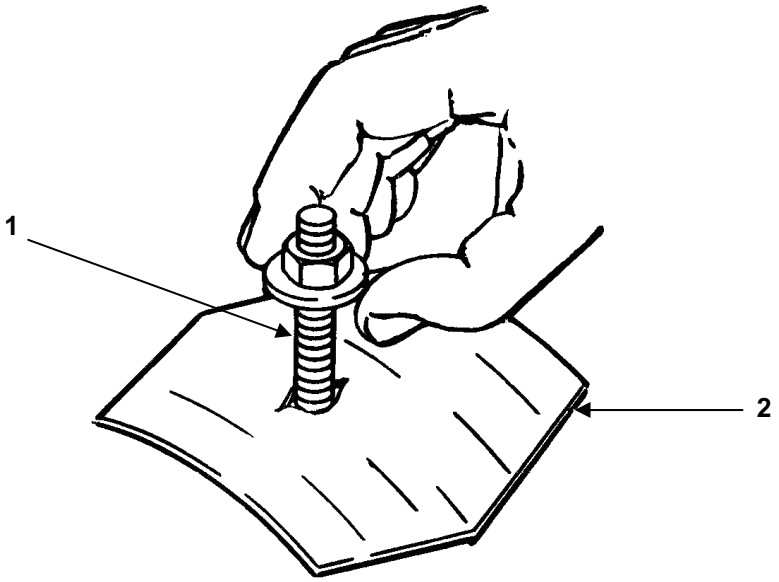

Figure 3. Method 2 Repair, Step 3.

4. Tighten nut (Figure 4, Item 1) on plug assembly (Figure 4, Item 2) until it is tight against drum body (Figure 4, Item 3).

5. Cut off the excess plug assembly shank (Figure 4, Item 4).

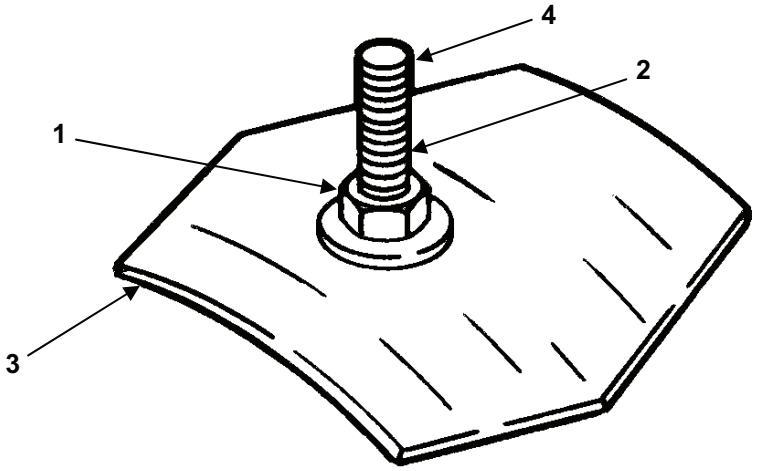

Figure 4. Method 2 Repair, Steps 4 and 5.

END OF WORK PACKAGE

UNIT MAINTENANCE
DRUM, FABRIC, COLLAPSIBLE, DRINKING WATER, 500 GALLON CAPACITY
PREPARATION FOR STORAGE OR SHIPMENT

INITIAL SET-UP:

Materials/Parts Required:
Towel, Paper (WP 0031, Item 6)
Strapping and Sealing Kit (WP 0030)

Reference:
WP 0011
WP 0014
TM 740-90-1
TM 10-8110-201-14&P

Equipment Condition:
Water Drained (WP 0005)
Coupler Valves Removed (WP 0012)
Adapter Assembly Removed (WP 0016)
Water Drum Disassembled (WP 0017)

Personnel Required:
Five

ADMINISTRATIVE STORAGE (45 Days or Less)

Administrative storage shall be in accordance with TM 740-90-1. It covers storage of equipment which can be readied for mission performance within 24 hours. Before placing the Drum in administrative storage, Preventive Maintenance Checks and Services (PMCS) (WP 0011) should be performed, all known deficiencies corrected and all current modification work orders applied. The administrative storage site should provide required protection from the elements and allow access for visual inspection when applicable.

WARNING

Drum must be completely dry inside and out for storage to prevent mold or mildew from growing on the drum. Sickness or death could occur.

1. Place one of the removed coupler valves in a cloth bag for protection.

2. Wipe the inside of the water drum dry with paper towels. Ensure water drum is completely dry.

3. Assemble water drum (WP 0017) and install adapter assemblies (WP 0016) on water drum.

4. Install one coupler valve (WP 0012) on adapter assembly.

5. With the water drum lying on its side, collapse drum in the middle of the drum by pushing down on the middle of the drum.

6. Fold the end of the water drum without the coupler valve installed to the middle of the drum and cover the end with the original plastic bag.

7. Open coupler valve installed on water drum.

8. Fold end of water drum to the middle of the drum expelling all the air in the water drum.

9. After all the air is removed from the drum, close the coupler valve and remove coupler valve (WP 0012) from drum. Place coupler valve in cloth bag. Install dust cap on adapter assembly.

WARNING

When lifting drum, always use five personnel to avoid injury.
The empty drum weighs 220 lbs.

10. Using five personnel, place water drum in shipping crate.

11. Place both bagged coupler valves in shipping crate.

12. Check repair kit for missing parts (WP 0014). Replace any missing parts.

13. Place a complete repair kit in shipping crate with drum.

14. Band shipping crate cover onto shipping crate.

INTERMEDIATE AND LONG TERM STORAGE

No special procedures are required. Follow Administrative Storage procedures.

PREPARATION FOR SHIPMENT

When transporting the fabric drum with the yoke and/or tie-down kit, reference TM 10-8110-201-14&P for applicable procedures.

END OF WORK PACKAGE

UNIT MAINTENANCE
DRUM, FABRIC, COLLAPSIBLE, DRINKING WATER
500 GALLON CAPACITY
TORQUE LIMITS

Torque Limits for Dry Fasteners

SHANK SIZE		TORQUE					
		SAE NO. GRADE 2		SAE NO. GRADE 5		SAE NO. GRADE 8	
INCHES	MILLI-METERS	POUNDS FOOT	NEWTON METERS	POUNDS FOOT	NEWTON METERS	POUNDS FOOT	NEWTON METERS
¼	6.35	5-6	6.8-8.13	9-11	12.2-14.9	12-15	16.3-20.3
5/16	7.94	10-12	13.6-16.3	17-20.5	23.1-27.8	24-29	32.5-39.3
3/8	9.53	20-23	27.1-31.2	35-42	47.5-57.0	45-54	61.0-73.2
7/16	11.11	30-35	40.7-47.4	54-64	73.2-86.8	70-84	94.9-113.9
½	12.70	45-52	61.0-70.5	80-96	108.5-130.2	110-132	149.2-179.0
9/16	14.29	65-75	88.1-101.6	110-132	149.2-179.0	160-192	217.0-260.4
5/8	15.88	95-105	128.7-142.3	150-180	203.4-244.1	220-264	298.3-358.0
¾	19.05	150-185	203.3-250.7	270-324	366.1-439.3	380-456	515.3-518.3
7/8	22.23	160-200	216.8-271.0	400-480	542.4-650.9	600-720	813.6-976.3
1	25.40	250-300	338.8-406.5	580-696	786.5-943.8	900-1080	1220.4-1464.5
1-1/8	25.58	-	-	800-880	1084.8-1193.3	1280-1440	1735.7-1952.8
1-1/4	31.75	-	-	1120-1240	1518.7-1681.4	1820-2000	2467.9-2712.0
1-3/8	34.93	-	-	1460-1680	1979.8-2278.1	2380-2720	3227.3-3688.3
1-1/2	38.10	-	-	1940-2200	2630.6-2983.2	3160-3560	4285.0-4827.4

Torque Limits for Wet Fasteners

SHANK SIZE		TORQUE					
		SAE NO. GRADE 2		SAE NO. GRADE 5		SAE NO. GRADE 8	
INCHES	MILLI-METERS	POUNDS FOOT	NEWTON METERS	POUNDS FOOT	NEWTON METERS	POUNDS FOOT	NEWTON METERS
¼	6.35	4.5-5.5	6.1-7.5	8-10	10.8-13.6	11-13.5	14.9-18.3
5/16	7.94	9-11	12.2-14.9	15-18.5	20.4-25.1	21.5-26	29.2-35.3
3/8	9.53	18-20.5	24.4-27.8	31.5-38	42.8-51.6	40.5-48.5	55-65.9
7/16	11.11	27-31.5	36.7-42.8	48.5-57.5	65.9-78.2	63-75.5	85.6-102.6
½	12.70	40.5-47	55-63.9	72-86.5	97.9-117.6	99-119	134.6-161.8
9/16	14.29	58.5-67.5	79.5-91.8	99-119	134.6-161.8	144-173	195.8-235.2
5/8	15.88	85.5-94.5	116.2-128.5	135-162	183.6-220.3	198-237.5	269.2-323
¾	19.05	135-166.5	183.6-226.4	243-291.5	330.4-396.4	342-410	465.1-557.6
7/8	22.23	144-180	195.8-224.8	360-432	489.6-587.5	540-648	734.4-881.2
1	25.40	225-270	306-367.2	522-626	709.9-851.3	810-972	1101.6-1321.9
1-1/8	25.58	-	-	720-792	979.2-1077.1	1152-1296	1566.7-1762.5
1-1/4	31.75	-	-	1008-1116	1370.8-1517.7	1638-1800	2227.6-2448
1-3/8	34.93	-	-	1314-1512	1787-2056.3	2142-2448	2430.3-3329.2
1-1/2	38.10	-	-	1746-1980	2374.5-2692.8	2844-3204	3867.8-4357.4

CHAPTER 7

PARTS INFORMATION
FOR
DRUM, FABRIC, COLLAPSIBLE, DRINKING WATER,
500 GALLON CAPACITY

UNIT MAINTENANCE
DRUM FABRIC, COLLAPSIBLE, DRINKING WATER
500 GALLON CAPACITY
REPAIR PARTS AND SPECIAL TOOLS LIST (RPSTL)
INTRODUCTION

INTRODUCTION

SCOPE

This RPSTL lists and authorizes spares and repair parts; special tools; special test, measurement and diagnostic equipment (TMDE); and other special support equipment required for performance of unit and direct support maintenance of the Drum. It authorizes the requisitioning, issue and disposition of spares, repair parts and special tools as indicated by the source, maintenance and recoverability (SMR) codes.

GENERAL

In addition to the Introduction work package, this RPSTL is divided into the following work packages.

1. Repair Parts List Work Packages. Work packages containing lists of spares and repair parts authorized by this RPSTL for use in the performance of maintenance. These work packages also include parts which must be removed for replacement of the authorized parts. Parts lists are composed of functional groups in ascending alphanumeric sequence, with the parts in each group listed in ascending figure and item number sequence. Sending units, brackets, filters and bolts are listed with the component they mount on. Bulk materials are listed by item number in FIG. BULK at the end of the work packages. Repair parts for reparable special tools are also listed in a separate work package. Items listed are shown on the associated illustrations.

2. Special Tools List Work Packages. Work packages containing lists of special tools, special TMDE and special support equipment authorized by this RPSTL (as indicated by Basis of Issue (BOI) information in the DESCRIPTION AND USABLE ON CODE (UOC) column). Tools that are components of common tool sets and/or Class VII are not listed.

3. Cross-Reference Indexes Work Packages. There are two cross-reference indexes work packages in this RPSTL: the National Stock Number (NSN) Index work package and the Part Number (P/N) Index work package. The National Stock Number Index work package refers you to the figure and item number. The Part Number Index work package refers you to the figure and item number.

EXPLANATION OF COLUMNS IN THE REPAIR PARTS LIST AND SPECIAL TOOLS LIST WORK PACKAGES

ITEM NO. (Column (1)). Indicates the number used to identify items called out in the illustration.

SMR CODE (Column (2)). The SMR code containing supply/requisitioning information, maintenance level authorization criteria and disposition instruction, as shown in the following breakout:

TABLE 1. SMR Code Explanation.

Source Code XX	Maintenance Code XX		Recoverability Code XX
1st two positions: How to get an item.	3rd position: Who can install, replace or use the item.	4th position: Who can do complete repair* on the item.	5th position: Who determines disposition action on unserviceable items.

Source Code. The source code tells you how you get an item needed for maintenance, repair or overhaul of an end item/ Equipment. Explanations of source codes follow:

Source Code	Application/Explanation
PA PB PC PD PE PF PG PH PR PZ	**NOTE** Items coded PC are subject to deterioration. Stock items: use the applicable NSN to requisition/request items with these source codes. They are authorized to the level indicated by the code entered in the 3rd position of the SMR code.
KD KF KB	Items with these codes are not to be requested/requisitioned individually. They are part of a kit which is authorized to the maintenance level indicated in the 3rd position of the SMR code. The complete kit must be requisitioned and applied.
MO – Made at unit/AVUM level MF – Made at DS/AVIM level MH – Made at GS level ML – Made at SRA MD – Made at Depot MG – Navy only	Items with these codes are not to be requisitioned/requested individually. They must be made from bulk material which is identified by the part number in the DESCRIPTION AND USABLE ON CODE (UOC) column and listed in the bulk material group work package of the RPSTL. If the item is authorized to you by the 3rd position code of the SMR code, but the source code indicates it is made at higher level, order the items from the higher level of maintenance.

*Complete Repair: Maintenance capacity, capability and authority to perform all corrective maintenance tasks of the "Repair" function in a use/user environment in order to restore serviceability to a failed item.

Source Code	Application/Explanation
AO – Assembled by unit/AVUM level AF – Assembled by DS/AVIM level AH – Assembled by GS level AL – Assembled by SRA AD – Assembled by Depot AG – Navy only	Items with these codes are not to be requested/requisitioned individually. The parts that make up the assembled item must be requisitioned or fabricated and assembled at the level of maintenance indicated by the source code. If the 3rd position of the SMR code authorizes you to replace the item, but the source code indicates the item is assembled at a higher level, order the item from the higher level of maintenance.
XA	Do not requisition an "XA" coded item. Order the next higher assembly. (Refer to the following NOTE.)
XB	If an item is not available from salvage, order it using the CAGEC and part number.
XC	Installation drawings, diagrams, instruction sheets, field Service drawings: identified by manufacturer's part number.
XD	Item is not stocked. Order an XD-coded item through normal supply channels using the CAGEC and part number given, if no NSN is available.

NOTE

Cannibalization or controlled exchange, when authorized, may be used as a source of supply for items with the above source codes except for those items source coded "XA" or those aircraft support items restricted by requirements of AR 750-1.

Maintenance Code. Maintenance codes tell you the level(s) of maintenance authorized to use and repair support items. The maintenance codes are entered in the third and fourth positions of the SMR code as follows:

Third Position. The maintenance code entered in the third position tells you the lowest maintenance level authorized to remove, replace and use an item. The maintenance code entered in the third position will indicate authorization to the following levels of maintenance:

Maintenance Code	Application/Explanation
O* -	Unit level/AVUM maintenance can remove, replace and use the item.
F -	Direct support/AVIM maintenance can remove, replace and use the item.
H -	General support maintenance can remove, replace and use the item.
L -	Specialized repair activity can remove, replace and use the item.
G -	Afloat and ashore intermediate maintenance can remove, replace and use the item (Navy only).
K -	Contractor facility can remove, replace and use the item.
Z -	Item is not authorized to be removed, replaced or used at any maintenance level.
D -	Depot can remove, replace and use the item.

*NOTE – Army may use C in the third position. However, for joint service publications, Army will use O.

Fourth Position. The maintenance code entered the fourth position tells you whether or not the item is to be repaired and identifies the lowest maintenance level with the capability to do complete repair (perform all authorized repair functions).

NOTE

Some limited repair may be done on the item at a lower level of maintenance, if authorized by the Maintenance Allocation Chart (MAC) and SMR codes.

Maintenance Code	Application/Explanation
O -	Unit/AVUM is the lowest level that can do complete repair of the item.
F -	Direct support/AVIM is the lowest level that can do complete repair of the item.
H -	General support is the lowest level that can do complete repair of the item.
L -	Specialized repair activity is the lowest level that can do complete repair of the item.
D -	Depot is the lowest level that can do complete repair of the item.
G -	Both afloat and ashore intermediate levels are capable of complete repair of item. (Navy only)
K -	Complete repair is done at contractor facility.
Z -	Nonreparable. No repair is authorized.
B -	No repair is authorized. No parts or special tools are authorized for maintenance of "B" coded item. However, the item may be reconditioned by adjusting, lubricating, etc., at the user level.

Recoverability Code. Recoverability codes are assigned to items to indicate the disposition action on unserviceable items. The recoverability code is shown in the fifth position of the SMR code as follows:

Recoverability Code	Application/Explanation
Z -	Nonreparable item. When unserviceable, condemn and dispose of the item at the level of maintenance shown in the third position of the SMR code.
O -	Reparable item. When uneconomically reparable, condemn and dispose of the item at the unit level.
F -	Reparable item. When uneconomically reparable, condemn and dispose of the item at the direct support level.
H -	Reparable item. When uneconomically reparable, condemn and dispose of the item at the general support level.
D -	Reparable item. When beyond lower level repair capability, return to depot. Condemnation and disposal of item are not authorized below depot level.
L -	Reparable item. Condemnation and disposal not authorized below Specialized Repair Activity (SRA).
A -	Item requires special handling or condemnation procedures because of specific reasons (such as precious metal content, high dollar value, critical material or hazardous material). Refer to appropriate manuals/directives for specific instructions.
G -	Filed level reparable item. Condemn and dispose at either afloat or ashore intermediate levels. (Navy only)
K -	Reparable item. Condemnation and disposal to be performed at contractor facility.

NSN (Column (3)). The NSN for the item is listed in this column.

CAGEC (Column (4)). The Commercial and Government Entity Code (CAGEC) is a five-digit code which is used to identify the manufacturer, distributor or Government agency/activity that supplies the item.

PART NUMBER (Column (5)). Indicates the primary number used by the manufacturer (individual, company, firm, corporation or Government activity), which controls the design and characteristics of the item by means of its engineering drawings, specifications, standards and inspection requirements to identify an item or range of items.

NOTE

When you use an NSN to requisition an item, the item you receive may have a different part number from the number listed.

DESCRIPTION AND USABLE ON CODE (UOC) (Column (6)). This column includes the following information:

1. The federal item name and, when required, a minimum description to identify the item.

2. Part numbers of bulk materials are referenced in this column in the line entry to be manufactured or fabricated.

3. Hardness Critical Item (HCI). A support item that provides the equipment with special protection from the electro-magnetic pulse (EMP) damage during a nuclear attack.

4. The statement END OF FIGURE appears just below the last item description in column (6) for a given figure in both the repair parts list and special tools list work packages.

QTY (Column (7)). The QTY (quantity per figure) column indicates the quantity of the item used in the breakout shown on the illustration/figure, which is prepared for a functional group, subfunctional group or an assembly. A "V" appearing in this column instead of a quantity indicates that the quantity is variable and quantity may change from application to application.

EXPLANATION OF CROSS-REFERENCE INDEXES WORK PACKAGES FORMAT AND COLUMNS

1. National Stock Number (NSN) Index Work Package. NSN's in this index are listed in National Item Identification Number (NIIN) sequence.

   STOCK NUMBER Column. This column lists the NSN in NIIN sequence. The NIIN consists of the last nine digits of the NSN. When using this column to locate an item, ignore the first four digits of the NSN. However, the complete NSN should be used when ordering items by stock number. For example, if the NSN is 5385-01-574-1476, the NIIN is 01-574-1476.

   FIG. Column. This column lists the number of the figure where the item is identified/located. The figures are in numerical order in the repair parts list and special tools list work packages.

   ITEM Column. The item number identifies the item associated with the figure listed in the adjacent FIG. column. This item is also identified by the NSN listed on the same line.

2. Part Number (P/N) Index Work Package. Part numbers in this index are listed in ascending alphanumeric sequence (vertical arrangement of letter and number combinations which places the first letter or digit of each group in order A through Z, followed by the numbers 0 through 9 and each following letter or digit in like order).

   PART NUMBER Column. Indicates the part number assigned to the item.

   FIG. Column. This column lists the number of the figure where the item is identified/located in the repair parts list and special tools list work packages.

   ITEM Column. The item number is the number assigned to the item as it appears in the figure referenced in the adjacent figure number column.

SPECIAL INFORMATION

UOC. The UOC appears in the lower left corner of the Description Column heading. Usable on codes are shown as "UOC:…" in the Description Column (justified left) on the first line under the applicable item/nomenclature. Uncoded items are applicable to all models.

Fabrication Instructions. Bulk materials required to manufacture items are listed in the bulk material functional group of this RPSTL. Part numbers for bulk material are also referenced in the Description Column of the line item entry for the item to be manufactured/fabricated.

Index Numbers. Items which have the word BULK in the figure column will have an index number shown in the item number column. This index number is a cross-reference between the NSN/Part Number (P/N) Index work packages and the bulk material list in the repair parts list work package.

HOW TO LOCATE REPAIR PARTS

1. When NSNs or Part Numbers Are Not Known.

   First. Using the table of contents, determine the assembly group to which the item belongs. This is necessary since figures are prepared for assembly groups and subassembly groups and lists are divided into the same groups.

   Second. Find the figure covering the functional group or the subfunctional group to which the item belongs.

   Third. Identify the item on the figure and note the number(s).

   Fourth. Look in the repair parts list work packages for the figure and item numbers. The NSNs and part numbers are on the same line as the associated item numbers.

2. When NSN Is Known.

   First. If you have the NSN, look in the STOCK NUMBER column of the NSN index work package. The NSN is arranged in NIIN sequence. Note the figure and item number next to the NSN.

   Second. Turn to the figure and locate the item number. Verify that the item is the one you are looking for.

3. When Part Number Is Known.

   First. If you have the part number and not the NSN, look in the PART NUMBER column of the part number index work package. Identify the figure and item number.

   Second. Look up the item on the figure in the applicable repair parts list work package.

UNIT MAINTENANCE
DRUM, FABRIC, COLLAPSIBLE, DRINKING WATER, 500 GALLON CAPACITY
REPAIR PARTS AND SPECIAL TOOLS LIST
VALVE COUPLER AND ADAPTER ASSEMBLIES

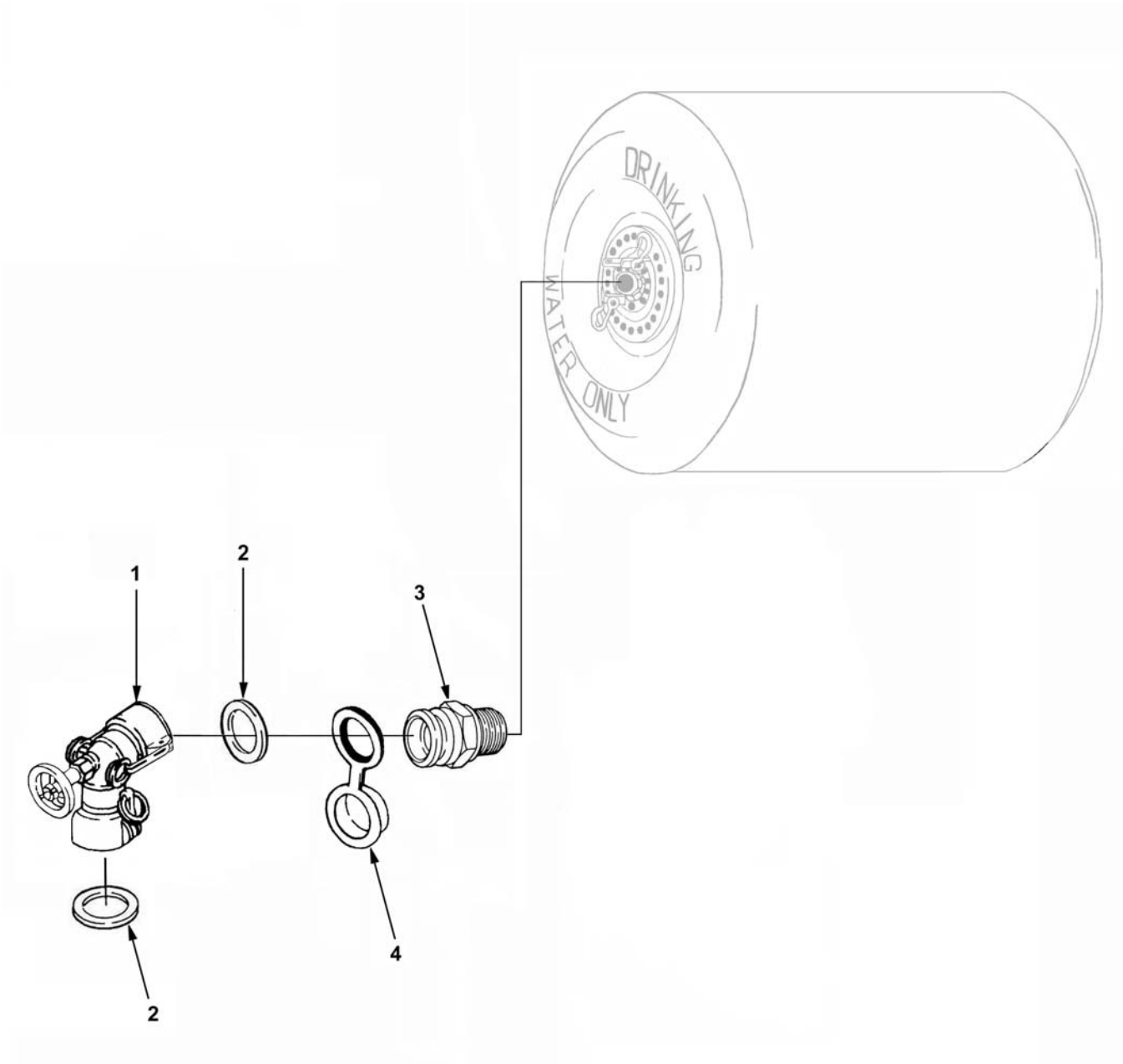

Figure 1. Valve Coupler and Adapter Assemblies

(1) ITEM NO.	(2) SMR CODE	(3) NSN	(4) CAGEC	(5) PART NUMBER	(6) DESCRIPTION AND USABLE ON CODE (UOC)	(7) QTY
					GROUP 01 VALVE COUPLER AND ADAPTER ASSEMBLIES	
					FIG. 1. VALVE COUPLER AND ADAPTER ASSEMBLIES	
1	PAOOO	4810-01-537-7883	8A8A5	GTA-3765-3	VALVE, COUPLER, 2 X 2	2
2	PAOZZ	5330-00-612-2414	81718	5388H	.GASKET	4
3	PAOOO	8110-01-391-3112	97403	13229E8595-1	ADAPTER ASSEMBLY	2
4	PAOZZ	5340-01-119-7584	97403	13216E9192	.CAP, PROTECTIVE, DUST	2
					END OF FIGURE	

UNIT MAINTENANCE
DRUM, FABRIC, COLLAPSIBLE, DRINKING WATER, 500 GALLON CAPACITY
REPAIR PARTS AND SPECIAL TOOLS LIST
PLATES, BEARING, SWIVEL AND CLOSURE

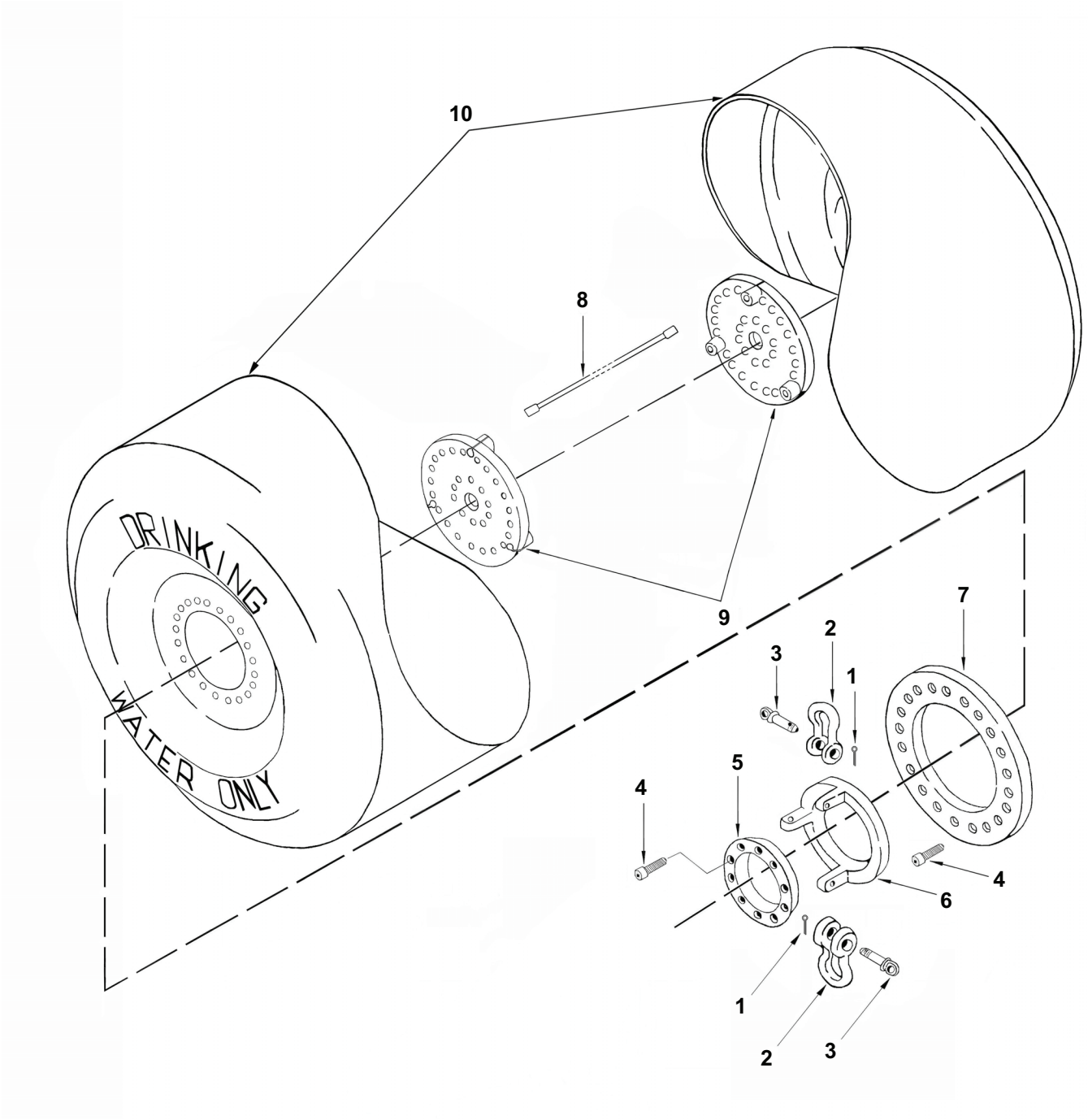

Figure 2. Plates, Bearing, Swivel and Closure

(1) ITEM NO.	(2) SMR CODE	(3) NSN	(4) CAGEC	(5) PART NUMBER	(6) DESCRIPTION AND USABLE ON CODE (UOC)	(7) QTY
					GROUP 02 PLATES, BEARING, SWIVEL AND CLOSURE	
					FIG. 2. PLATES, BEARING, SWIVEL AND CLOSURE	
1	PAOZZ	5315-00-839-5822	80205	MS24665-353	PIN, COTTER	4
2	PAOZZ	4030-00-149-5574	18876	8485436	SHACKLE	4
3	PAOZZ	5306-01-118-1915	97403	13216E9193	BOLT, SHOULDER	4
4	PAOZZ	5305-00-978-9395	30978	550088	SCREW, CAP, SOCKET HEAD	62
5	PAOZZ	8110-01-110-4817	97403	13216E9168	PLATE, BEARING	2
6	PAOZZ	8110-01-104-5181	97403	13216E9163	PLATE, SWIVEL	2
7	PAOZZ	5365-01-487-8319	97403	13216E9183	RING, CLOSURE	2
8	PAOZZ	4010-01-363-7377	97403	13216E9167-2	WIRE ROPE ASSEMBLY	3
9	PAOZZ	9535-01-487-8315	06468	13216E9166	PLATE, CLOSURE	2
10	XDOOO		8A8A5	GTA-6027	BODY, DRUM, 500 GAL.	1
					END OF FIGURE	

UNIT MAINTENANCE
DRUM FABRIC, COLLAPSIBLE, DRINKING WATER
500 GALLON CAPACITY
REPAIR PARTS AND SPECIAL TOOLS LIST
NATIONAL STOCK NUMBER INDEX

STOCK NUMBER	FIG.	ITEM
4030-00-149-5574	2	2
5330-00-612-2414	1	2
5315-00-839-5822	2	1
5305-00-978-9395	2	4
8110-01-104-5181	2	6
8110-01-110-4817	2	5
5306-01-118-1915	2	3
5340-01-119-7584	1	4
4010-01-363-7377	2	8
8110-01-391-3112	1	3
9535-01-487-8315	2	9
5365-01-487-8319	2	7
4810-01-537-7883	1	1

UNIT MAINTENANCE
DRUM FABRIC, COLLAPSIBLE, DRINKING WATER
500 GALLON CAPACITY
REPAIR PARTS AND SPECIAL TOOLS LIST
PART NUMBER INDEX

PART NUMBER	FIG.	ITEM
GTA-3765-3	1	1
GTA-6027	2	10
MS24665-353	2	1
13216E9163	2	6
13216E9166	2	9
13216E9167-2	2	8
13216E9168	2	5
13216E9183	2	7
13216E9192	1	4
13216E9193	2	3
13229E8595-1	1	3
5388H	1	2
550088	2	4
8485436	2	2

CHAPTER 8

SUPPORTING INFORMATION
FOR
DRUM, FABRIC, COLLAPSIBLE, DRINKING WATER,
500 GALLON CAPACITY

OPERATOR'S AND UNIT MAINTENANCE
DRUM FABRIC, COLLAPSIBLE, DRINKING WATER
500 GALLON CAPACITY
SUPPORTING INFORMATION
REFERENCES

SCOPE

This work package lists all forms, pamphlets, field manuals, technical manuals and miscellaneous publications referenced in this manual. Also listed are publications that should be consulted for additional information.

FORMS

DA Form 2028	Recommended Changes to Publications and Blank Forms
SF 361	Transportation Discrepancy Report
SF 368	Product Quality Deficiency Report

PAMPHLETS

DA PAM 738-750	Functional User's Manual for the Army Maintenance Management System (TAMMS)

FIELD MANUALS

FM 3-3	Chemical and Biological Contamination Avoidance
FM 3-4	NBC Protection
FM-3-5	NBC Decontamination
FM 4-25.11	First Aid

TECHNICAL MANUALS

TM 10-8110-201-14&P	Drums, Fabric Collapsible Non-Vented and Repair Parts And Special Tools List (RPSTL)
TM 740-90-1	Administrative Storage Requirements
TM 750-244-3	Procedures for Destruction of Equipment to Prevent Enemy Use

REGULATIONS

AR 700-138	Army Logistics Readiness and Sustainability
AR 750-1	Army Materiel Maintenance Policy and Retail Maintenance Operations

MISCELLANEOUS

CTA 8-100	Army Medical Department Expendable/Durable Items
CTA 50-909	Field and Garrison Furnishings and Equipment
CTA 50-970	Expendable/Durable Items (Except Medical, Class V, Repair Parts and Heraldic Items)

OPERATOR'S AND UNIT MAINTENANCE
DRUM, FABRIC, COLLAPSIBLE, DRINKING WATER, 500 GALLON CAPACITY
SUPPORTING INFORMATION
MAINTENANCE ALLOCATION CHART (MAC) INTRODUCTION

INTRODUCTION

The Army Maintenance System MAC

This introduction provides a general explanation of all maintenance and repair functions authorized at the two maintenance levels under the Two-Level Maintenance System concept.

The MAC (immediately following the introduction) designates overall authority and responsibility for the performance of maintenance functions on the identified end item or component. The application of the maintenance functions to the end item or component levels, which are shown on the MAC in column (4) as:

Field - includes two columns, Unit maintenance and Direct Support maintenance. The Unit maintenance column is divided again into two more subcolumns, C for Operator or Crew and O for Unit maintenance.

Sustainment - includes two subcolumns, General Support maintenance (H) and Depot (D).

The tools and test equipment requirements (immediately following the MAC) list the tools and test equipment (both special tools and common tool sets) required for each maintenance function as referenced from the MAC.

The remarks (immediately following the tools and test equipment requirements) contain supplemental instructions and explanatory notes for a particular maintenance function.

Maintenance Functions

Maintenance functions are limited to and defined as follows.

1. Inspect. To determine the serviceability of an item by comparing its physical, mechanical and/or electrical characteristics with established standards through examination (e.g., by sight, sound or feel). This includes scheduled inspections and gagings and evaluation of cannon tubes.

2. Test. To verify serviceability by measuring the mechanical, pneumatic, hydraulic or electrical characteristics of an item and comparing those characteristics with prescribed standards on a scheduled basis; i.e., load testing of lift devices and hydrostatic testing of pressure hoses.

3. Service. Operations required periodically to keep an item in proper operating condition; e.g., to clean (includes decontaminate, when required), to preserve, to drain, to paint, or to replenish fuel, lubricants, chemical fluids or gases. This includes scheduled exercising and purging of recoil mechanisms. The following are examples of service functions:

a. Unpack. To remove from packing box for service or when required for the performance of maintenance operations.

b. Repack. To return item to packing box after service and other maintenance operations.

c. Clean. To rid the item of contamination.

d. Touch up. To spot paint scratched or blistered surfaces.

e. Mark. To restore obliterated identification.

4. Adjust. To maintain or regulate, within prescribed limits, by bringing into proper position, or by setting the operating characteristics to specified parameters.

5. Align. To adjust specified variable elements of an item to bring about optimum or desired performance.

6. Calibrate. To determine and cause corrections to be made or to be adjusted on instruments of test, measuring and diagnostic equipment used in precision measurement. Consists of comparisons of two instruments, one of which is a certified standard of known accuracy, to detect and adjust any discrepancy in the accuracy of the instrument being compared.

7. Remove/Install. To remove and install the same item when required to perform service or other maintenance functions. Install may be the act of emplacing, seating or fixing into position a spare, repair part or module (component or assembly) in a manner to allow the proper functioning of equipment or a system.

8. Replace. To remove an unserviceable item and install a serviceable counterpart in its place. "Replace" is authorized by the MAC and assigned maintenance level is shown as the third position code of the Source, Maintenance, and Recoverability (SMR) code.

9. Repair. The application of maintenance services including fault location/troubleshooting, removal/installation, disassembly/assembly procedures and maintenance actions to identify troubles and restore serviceability to an item by correcting specific damage, fault, malfunction or failure in a part, subassembly, module (component or assembly), end item or system.

NOTE

The following definitions are applicable to the “repair” maintenance function.

Services. Inspect, test, service, adjust, align, calibrate and/or replace.

Fault location/troubleshooting. The process of investigating and detecting the cause of equipment malfunctioning; the act of isolating a fault within a system or Unit Under Test (UUT).

Disassembly/assembly. The step-by-step breakdown (taking apart) of a spare/functional group coded item to the level of its least component that is assigned a SMR code for the level of maintenance under consideration (i.e., identified as maintenance significant).

Actions. Welding, grinding, riveting, straightening, facing, machining, and/or resurfacing.

10. Overhaul. That maintenance effort (service/action) prescribed to restore an item to a completely serviceable/operational condition as required by maintenance standards in appropriate technical publications. Overhaul is normally the highest degree of maintenance performed by the Army. Overhaul does not normally return an item to like new condition.

11. Rebuild. Consists of those services/actions necessary for the restoration of unserviceable equipment to a like new condition in accordance with original manufacturing standards. Rebuild is the highest degree of materiel maintenance applied to Army equipment. The rebuild operation includes the act of returning to zero those age measurements (e.g., hours/miles) considered in classifying Army equipment/components.

Explanation of Columns in the MAC

Column (1) — Group Number. Column (1) lists functional group code (FGC) numbers, the purpose of which is to identify maintenance significant components, assemblies, subassemblies, and modules with the Next Higher Assembly (NHA).

Column (2) — Component/Assembly. Column (2) contains the item names of components, assemblies, subassemblies, and modules for which maintenance is authorized.

Column (3) — Maintenance Function. Column (3) lists the functions to be performed on the item listed in column (2). (For detailed explanation of these functions, refer to “Maintenance Functions” outlined above.)

Column (4) — Maintenance Level. Column (4) specifies each level of maintenance authorized to perform each function listed in column (3) by indicating work time required (expressed as man-hours in whole hours or decimals) in the appropriate subcolumn. This work time figure represents the active time required to perform that maintenance function at the indicated level of maintenance. If the number or complexity of the tasks within the listed maintenance function varies at different maintenance levels, appropriate work time figures are to be shown for each level. The work time figure represents the average time required to restore an item (assembly, subassembly, component, module, end item, or system) to a serviceable condition under typical field operating conditions. This time includes preparation time (including any necessary disassembly/assembly time), troubleshooting/fault location time, and quality assurance time in addition to the time required to perform the specific tasks identified for the maintenance functions authorized in the MAC. The symbol designations for the various maintenance levels are as follows:

Field:

C - Operator or Crew maintenance
O - Unit maintenance
F - Direct support maintenance

Sustainment:
L - Specialized Repair Activity (SRA)
H - General support maintenance
D - Depot maintenance

NOTE

The “L” maintenance level is not included in column (4) of the MAC. Functions to this level of maintenance are identified by a work time figure in the "H" column of column (4) and an associated reference code is used in the REMARKS column (6). This code is keyed to the remarks and the SRA complete repair application is explained there.

Column (5) — Tools and Equipment Reference Code. Column (5) specifies, by code, those common tool sets (not individual tools), common Test, Measurement, and Diagnostic Equipment (TMDE), and special tools, special TMDE, and special support equipment required to perform the designated function. Codes are keyed to the entries in the tools and test equipment table.

Column (6) — Remarks Code. When applicable, this column contains a letter code, in alphabetical order, which is keyed to the remarks table entries.

Explanation of Columns in the Tools and Test Equipment Requirements

Column (1) — Tools or Test Equipment Reference Code. The tools or test equipment reference code correlates with a code used in column (5) of the MAC.

Column (2) — Maintenance Level. The lowest level of maintenance authorized to use the tool or test equipment.

Column (3) — Nomenclature. Name or identification of the tool or test equipment.

Column (4) — National Stock Number (NSN). The NSN of the tool or test equipment.

Column (5) — Tool Number. The manufacturer's part number.

Explanation of Columns in the Remarks

Column (1) — Remarks Code. The code recorded in column (6) of the MAC.

Column (2) — Remarks. This column lists information pertinent to the maintenance function being performed as indicated in the MAC.

OPERATOR'S AND UNIT MAINTENANCE
DRUM, FABRIC, COLLAPSIBLE, DRINKING WATER, 500 GALLON CAPACITY
SUPPORTING INFORMATION
MAINTENANCE ALLOCATION CHART (MAC)

Table 1. MAC for Drum

(1)	(2)	(3)	(4) MAINTENANCE LEVEL					(5)	(6)
			FIELD			SUSTAINMENT			
			UNIT		DS	GS	DEPOT		
GROUP NUMBER	COMPONENT/ ASSEMBLY	MAINTENANCE FUNCTION	C	O	F	H	D	TOOLS & EQUIPMENT REF CODE	REMARKS CODE
00	500 GAL. WATER DRUM ASSEMBLY	Inspect	0.3						
		Replace		0.4					
		Repair		4.1				1,2,3	A
01	VALVE COUPLER AND ADAPTER ASSEMBLIES	Inspect	0.1						
		Replace		0.1				1	
		Repair		0.2					
02	PLATES, BEARING, SWIVEL AND CLOSURE	Inspect	0.1						
		Replace		1.0				1,2,3	
	WIRE ROPE ASSEMBLY	Inspect		0.1					
		Replace		1.1					
	BODY, DRUM	Inspect	0.1						
		Replace		2.0					
		Repair		1.1					A

Table 2. Tools and Test Equipment for Drum

TOOLS OR TEST EQUIPMENT REF. CODE	MAINTENANCE LEVEL	NOMENCLATURE	NATIONAL STOCK NUMBER (NSN)	TOOL NUMBER
1	O	Tool Kit, General Mechanic's	5180-00-177-7033	SC-5180-90-CL-N26
2	O	Torque Wrench (a component of SC4910-95CLA31 NSN 4910-00-754-0705)	5120-00-554-7292	
3	O	Screwdriver Attachment, Socket Wrench, 5/16 inch	5120-00-683-8602	

Table 3. Remarks for Drum

REMARKS CODE	REMARKS
A	Two types of repairs are authorized for the water drum assembly. The first is a temporary repair to be performed by the crew/operator using components from the Repair Kit referenced in WP 0029 00. The second is a permanent repair to be performed by unit maintenance using repair parts referenced in the RPSTL WP 0022 00 and WP 0023 00.

OPERATOR'S AND UNIT MAINTENANCE
DRUM, FABRIC, COLLAPSIBLE, DRINKING WATER, 500 GALLON CAPACITY
SUPPORTING INFORMATION
COMPONENTS OF END ITEM (COEI) AND BASIC ISSUE ITEM (BII) LISTS

INTRODUCTION

SCOPE

This work package lists COEI and BII for the Drum to help you inventory the items for safe and efficient operation of the equipment.

GENERAL

The COEI and BII information is divided into the following lists:

Components of End Item (COEI). This list is for information purposes only and is not authority to requisition replacements. These items are part of the Drum. As part of the end item, these items must be with the end item whenever it is issued or transferred between property accounts. Items of COEI are removed and separately packaged for transportation or shipment only when necessary. Illustrations are furnished to help you find and identify the items.

Basic Issue Items (BII). These essential items are required to place the Drum in operation, operate it, and to do emergency repairs. Although shipped separately packaged, BII must be with the Drum during operation and when it is transferred between property accounts. Listing these items is your authority to request/requisition them for replacement based on authorization of the end item by the TOE/MTOE. Illustrations are furnished to help you find and identify the items.

EXPLANATION OF COLUMNS IN THE COEI LIST AND BII LIST

Column (1) – Item Number. Gives you the reference number of the item illustrated.

Column (2) – National Stock Number (NSN) and Illustration. Identifies the stock number of the item to be used for requisitioning purposes and provides an illustration of the item.

Column (3) – Description, Part Number/(CAGEC). Identifies the Federal item name (in all capital letters) followed by a minimum description when needed. The stowage location of COEI and BII is also included in this column. The last line below the description is the part number and the Commercial and Government Entity Code (CAGEC) (in parentheses).

Column (4) – Usable On Code. When applicable, gives you a code if the item you need is not the same for different models of equipment.

Column (5) – Unit of Issue (U/I). Indicates the physical measurement or count of the item as issued per the National Stock Number shown in the column (2).

Column (6) – Qty Rqr. Indicates the quantity required.

Table 1. Components of End Item List

(1) Item Number	(2) National Stock Number (NSN) and Illustration	(3) Description, Part Number and CAGEC	(4) Usable On Code	(5) U/I	(6) Qty Rqr
1	4810-01-537-7883	Valve, Coupler, 2X2 GTA-3765-3 (8A8A5)		EA	2
2	8110-01-391-3112	Adapter, Assembly 13229E8595-1 (97403)		EA	2

BASIC ISSUE ITEMS

Table 2. Basic Issue Items List

(1) Item Number	(2) National Stock Number (NSN) and Illustration	(3) Description, Part Number/(CAGEC)	(4) Usable On Code	(5) U/I	(6) Qty Rqr
1		Operator's and Field Level Maintenance Manual With Field Level Maintenance Repair Parts and Special Tools List for Drum, Fabric, Collapsible, Drinking Water, 500 Gallon Capacity TM 10-5430-245-12&P		EA	1
2	5430-01-538-5102	Repair Kit, Type I ATPD-2263 Type I (84583) Items 3 thru 10 make up the repair kit:		EA	1
3		Container ADTPD-2263 TYPE I CONTAINER (84583)		EA	1
4	5510-01-115-0893	Plug, Wood, 5/8 In. 5-14-679-1-8 (97403)		EA	1
5	5510-01-412-0264	Plug, Wood, 1-1/2 In. M52255FIG3-1 ½ (81349)		EA	1
6	5510-01-119-5995	Plug, Wood, 2 In. M52255FIG3-2 (81349)		EA	1

Table 2. Basic Issue Items List (cont.)

(1) Item Number	(2) National Stock Number (NSN) and Illustration	(3) Description, Part Number/(CAGEC)	(4) Usable On Code	(5) U/I	(6) Qty Rqr
7	5430-01-114-4598	Patch Assembly, Mechanical M52255 FIG 4 (81349)		EA	3
8	5430-01-245-5983	Patch Assembly, Mechanical M52255FIG5 – TYPE II (0LAM3)		EA	3
9	5430-01-114-4597 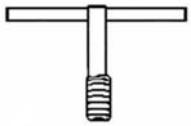	Rotary Cutter, Wrench M52255 FIG. 2 (81349)		EA	1
10	7610-01-122-3771	Sheet, Technical MIL-R-52255 FIG 6 (81349)		EA	1

OPERATOR'S AND UNIT MAINTENANCE
DRUM, FABRIC, COLLAPSIBLE, DRINKING WATER, 500 GALLON CAPACITY
SUPPORTING INFORMATION
ADDITIONAL AUTHORIZATION LIST

INTRODUCTION

SCOPE

This work package lists additional items you are authorized for the support of the Drum.

GENERAL

This list identifies items that do not have to accompany the Drum and that do not have to be turned in with it. These items are all authorized to you by CTA, MTOE, TDA or JTA.

EXPLANATION OF COLUMNS IN THE AAL

Column (1) – National Stock Number (NSN). Identifies the stock number of the item to be used for requisitioning purposes.

Column (2) – Description, Part Number/(CAGEC). Identifies the Federal item name (in all capital letters) followed by a minimum description when needed. The last line below the description is the part number and the Commercial and Government Entity Code (CAGEC) (in parentheses).

Column (3) – Usable On Code. When applicable, gives you a code if the item you need is not the same for different models of equipment.

Column (4) – U/I. Unit of Issue (U/I) indicates the physical measurement or count of the item as issued per the National Stock Number shown in the column (2).

Column (5) – Qty Recm. Indicates the quantity recommended.

Table 1. Additional Authorization List

(1) NATIONAL STOCK NUMBER (NSN)	(2) DESCRIPTION, PART NUMBER/(CAGEC)	(3) USABLE ON CODE	(4) U/I	(5) QTY RECM
8110-00-856-6245	KIT, TIEDOWN ASSEMBLY (81349) MIL-T-40627		EA	1
3540-00-565-6241	STRAPPING AND SEALING KIT (74854) 3540-00-565-6241		KT	1
8110-00-856-6243	YOKE, TOWING AND LIFTING (81349) MIL-Y-40628		EA	1

OPERATOR'S AND UNIT MAINTENANCE
DRUM, FABRIC, COLLAPSIBLE, DRINKING WATER, 500 GALLON CAPACITY
SUPPORTING INFORMATION
EXPENDABLE AND DURABLE ITEMS LIST

INTRODUCTION

Scope

This work package lists expendable and durable items that you will need to use and maintain the Drum. This listing is for information only and is not authority to requisition the listed items. These items are authorized to you by CTA 50-790, Expendable/Durable Items (except medical, class V repair parts, and heraldic items) or CTA 8-100, Army Medical Department Expendable/Durable Items.

Explanation of Columns

Column (1), Item Number. This number is assigned to the entry in the listing and is referenced in the narrative instructions to identify the item (e.g., "Use anti-seize compound item 5, WP 0036 00).

Column (2), Level. This column identifies the lowest level of maintenance that requires the item.

Column (3), National Stock Number (NSN). This is the national stock number assigned to the item, which you can use to requisition it.

Column (4), Item Name, Description, Commercial and Government Entity Code (CAGEC), and Part Number (P/N). This column provides the other information you need to identify the item.

Column (5), Unit of Measure (U/M). This code shows the physical measurement or count of an item, such as gallon, dozen, gross, etc.

EXPENDABLE AND DURABLE ITEMS LIST

Table 1. Expendable and Durable Items List

(1) ITEM NUMBER	(2) LEVEL	(3) NATIONAL STOCK NUMBER	(4) ITEM NAME, DESCRIPTION, CAGE, AND PART NUMBER	(5) U/M
1	O	7920-01-263-7624	Brush, Scrub (39428) 7451T14	EA
2	O	7510-00-164-8893	Chalk, Marking (81348) SS-C-266	GR
3	O	5350-00-865-5700	Cloth, Abrasive (80204) ANSI B74.18	PG
4	O	7930-00-515-2477	Detergent, General Purpose Non-Toxic, Non-Hazardous (80244) 7930-00-515-2477	GL

Table 1. Expendable and Durable Items List (cont.)

(1) ITEM NUMBER	(2) LEVEL	(3) NATIONAL STOCK NUMBER	(4) ITEM NAME, DESCRIPTION, CAGE, AND PART NUMBER	(5) U/M
5	O	8030-00-889-3534	Tape, Antiseizing (58536) AA58092-2-1	ROLL
6	O	7920-00-823-6931	Towel, Paper (80244) 7920-00-823-6931	BX

UNIT MAINTENANCE
DRUM, FABRIC, COLLAPSIBLE, DRINKING WATER, 500 GALLON CAPACITY
SUPPORTING INFORMATION
MANDATORY REPLACEMENT PARTS LIST

MANDATORY REPLACEMENT PARTS LIST

This work package includes a list of all mandatory replacement parts referenced in the task initial setups and procedures. These items must be replaced during maintenance whether they have failed or not. This includes items based on usage intervals such as miles, time, rounds, fired, etc.

Table 1. Mandatory Replacement Parts List

Item Number	Part Number (CAGEC)	National Stock Number (NSN)	Nomenclature	Qty.
1	MS24665-353 (80205)	5315-00-839-5822	Cotter Pin	4
2	5388H (81718)	5330-00-612-2414	Gasket	4

OPERATOR'S AND UNIT MAINTENANCE AND REPAIR PARTS AND SPECIAL TOOLS LIST DRUM, FABRIC, COLLAPSIBLE, DRINKING WATER, 500 GALLON CAPACITY SUPPORTING INFORMATION GLOSSARY

Defective	Condition of a part that prevents the part from performing its intended function, caused by normal aging, accident or manufacturing imperfection.
Deterioration	Condition of a part caused by weathering, excessive heat, excessive cold, chemical action, etc.
Malfunction	Failure to operate in a normal manner.

INDEX

Subject — WP Sequence No.-Page No.

A

Adapter Assembly and Dust Cap, Remove/Install....0016 00-1
Additional Authorization List....0030 00-1

B

Basic Issue Item (BII) Lists, Components of End Item (COEI) and....0029 00-1

C

Common Tools and Equipment....0001 00-2
Components of End Item (COEI) and Basic Issue Item (BII) Lists....0029 00-1
Corrosion Prevention and Control (CPC)....0001 00-1
Coupler Valve, Remove/Install....0012 00-1
Coupler Valve Gasket, Remove and Install....0015 00-1

D

Description and Use of Operator Controls and Indicators....0004 00-1
Destruction of Army Materiel To Prevent Enemy Use....0001 00-1
Dispensing Drinking Water From Drum....0005 00-6
Drum Body Temporary Repair, Method 1....0013 00-1
Drum Body Temporary Repair, Method 2....0018 00-1

E

Equipment Description and Data....0002 00-1
Expendable and Durable Items List....0031 00-1

F

Filling The Drum....0005 00-1

G

General Information....0001 00-1

H

How To Use This Manual....iv

INDEX

Subject — WP Sequence No.-Page No.

I

Identification Labels and Information Stencils 0007 00-1

J, K

L

List of Abbreviations/Acronyms 0001 00-2
Location and Description of Major Components 0002 00-2

M

Maintenance Allocation Chart (MAC) Introduction 0027 00-1
Maintenance Allocation Chart (MAC) 0028 00-1
Maintenance Forms, Records and Reports 0001 00-1
Mandatory Replacement Parts List 0032 00-1

N

National Stock Number Index 0024 00-1
Nomenclature Cross-Reference Index 0001 00-2

O

Operation In Extreme Heat, Above 135ºF (57ºC) 0006 00-1
Operation In Freezing Temperatures, 32ºF (0ºC) 0006 00-1
Operation In Sandy and Dusty Conditions 0006 00-3
Operation In Strong Winds 0006 00-2
Operation Under Unusual Conditions 0006 00-1
Operation Under Usual Conditions 0005 00-1
Operator Troubleshooting Procedures 0008 00-1
Operator's PMCS Procedures 0011 00-1
Operator's Preventive Maintenance Checks and Services (PMCS) Introduction 0010 00-1

P

Part Number Index 0025 00-1
Preparation for Storage or Shipment 0019 00-1
PMCS Procedures, Operator's 0011 00-1
Principles of Operation and Use 0003 00-1

Q

Quality of Material 0001 00-2

INDEX

Subject — WP Sequence No.-Page No.

R

References 0026 00-1
Repair Parts and Special Tools List (RPSTL) Introduction 0021 00-1
Repair Parts and Special Tools List, Plates, Bearing, Swivel and Closure 0023 00-1
Repair Parts and Special Tools List, Valve Coupler and Adapter Assemblies 0022 00-1
Reporting Equipment Improvement Recommendations (EIR) 0001 00-1

S

Service Upon Receipt 0014 00-1
Shackle, Bearing and Swivel Plates, Wire Rope, Drum Body, Remove/Inspect/Clean/Install 0017 00-1
Supporting Information For Repair Parts, Special Tools, TMDE and Support Equipment 0001 00-2

T

Temporary Repair of Drum Body, Method 1 ..... 0013 00-1
Temporary Repair of Drum Body, Method 2 ..... 0018 00-1
Theory of Operation 0003 00-1
Torque Limits 0020 00-1

U

Unit Troubleshooting Procedures 0009 00-1

V

W

Warning Summary ..... a

X, Y, Z

By Order of the Secretary of the Army:

PETER J. SCHOOMAKER
General, United States Army
Chief of Staff

Official:

JOYCE E. MORROW
Administrative Assistant to the
Secretary of the Army
0607901

Distribution:

To be distributed in accordance with the initial distribution number (IDN) 256888, requirements for TM 10-5430-245-13&P.

These are the instructions for sending an electronic 2028

The following format must be used if submitting an electronic 2028. The subject line must be exactly the same and all fields must be included; however, only the following fields are mandatory: 1, 3, 4, 5, 6, 7, 8, 9, 10, 13, 15, 16, 17 and 27.

From: **"Whomever" whomever@avma27.army.mil**
To: **tacom-tech-pubs@tacom.army.mil**

Subject DA Form 2028

1. ***From:*** Joe Smith
2. ***Unit:*** home
3. ***Address:*** 4300 Park
4. ***City:*** Hometown
5. ***St:*** MO
6. ***Zip:*** 77777
7. ***Date Sent:*** 19-OCT-93
8. ***Pub no:*** 55-1915-200-10
9. ***Pub Title:*** TM
10. ***Publication Date:*** 11-APR-88
11. ***Change Number:*** 12
12. ***Submitter Rank:*** MSG
13. ***Submitter Fname:*** Joe
14. ***Submitter Mname:*** T
15. ***Submitter Lname:*** Smith
16. ***Submitter Phone:*** 123-123-1234
17. ***Problem:*** 1
18. ***Page:*** 1
19. ***Paragraph:*** 3
20. ***Line:*** 4
21. ***NSN:*** 5
22. ***Reference:*** 6
23. ***Figure:*** 7
24. ***Table:*** 8
25. ***Item:*** 9
26. ***Total:*** 123
27. ***Text:***
This is the text for the problem below line 27.

RECOMMENDED CHANGES TO PUBLICATIONS AND BLANK FORMS For use of this form, see AR 25-30; the proponent agency is OAASA	Use Part II *(reverse)* for Repair Parts and Special Tool Lists (RPSTL) and Supply Catalogs/Supply Manuals (SC/SM).	DATE
TO: *(Forward to proponent of publication or form) (Include ZIP Code)*	**FROM:** *(Activity and location) (Include ZIP Code)*	

PART I - ALL PUBLICATIONS (EXCEPT RPSTL AND SC/SM) AND BLANK FORMS

PUBLICATION/FORM NUMBER	DATE	TITLE
TM 10-5430-245-13&P	23 Mayl 2006	Drum, Fabric, Collapsible, Drinking Water, 500 Gal.

ITEM	PAGE	PARA-GRAPH	LINE	FIGURE NO.	TABLE	RECOMMENDED CHANGES AND REASON

** Reference to line numbers within the paragraph or subparagraph.*

TYPED NAME, GRADE OR TITLE	TELEPHONE EXCHANGE/AUTOVON, PLUS EXTENSION	SIGNATURE

DA FORM 2028, FEB 74 REPLACES DA FORM 2028, 1 DEC 68, WHICH WILL BE USED.

USAPA V3.01

TO: *(Forward direct to addressee listed in publication)*	**FROM:** *(Activity and location) (Include ZIP Code)*	DATE

PART II - REPAIR PARTS AND SPECIAL TOOL LISTS AND SUPPLY CATALOGS/SUPPLY MANUALS

PUBLICATION NUMBER	DATE	TITLE

PAGE NO.	COLM NO.	LINE NO.	NATIONAL STOCK NUMBER	REFERENCE NO.	FIGURE NO.	ITEM NO.	TOTAL NO. OF MAJOR ITEMS SUPPORTED	RECOMMENDED ACTION

PART III - REMARKS *(Any general remarks or recommendations, or suggestions for improvement of publications and blank forms. Additional blank sheets may be used if more space is needed.)*

TYPED NAME, GRADE OR TITLE	TELEPHONE EXCHANGE/AUTOVON, PLUS EXTENSION	SIGNATURE

USAPA V3.01

RECOMMENDED CHANGES TO PUBLICATIONS AND BLANK FORMS For use of this form, see AR 25-30; the proponent agency is OAASA	Use Part II *(reverse)* for Repair Parts and Special Tool Lists (RPSTL) and Supply Catalogs/Supply Manuals (SC/SM).	DATE
TO: *(Forward to proponent of publication or form) (Include ZIP Code)*	**FROM:** *(Activity and location) (Include ZIP Code)*	

PART I - ALL PUBLICATIONS (EXCEPT RPSTL AND SC/SM) AND BLANK FORMS

PUBLICATION/FORM NUMBER	DATE	TITLE
TM 10-5430-245-13&P	23 May 2006	Drum, Fabric, Collapsible, Drinking Water, 500 Gal.

ITEM	PAGE	PARA-GRAPH	LINE	FIGURE NO.	TABLE	RECOMMENDED CHANGES AND REASON

** Reference to line numbers within the paragraph or subparagraph.*

TYPED NAME, GRADE OR TITLE	TELEPHONE EXCHANGE/AUTOVON, PLUS EXTENSION	SIGNATURE

TO: *(Forward direct to addressee listed in publication)*	**FROM:** *(Activity and location) (Include ZIP Code)*	DATE

PART II - REPAIR PARTS AND SPECIAL TOOL LISTS AND SUPPLY CATALOGS/SUPPLY MANUALS

PUBLICATION NUMBER	DATE	TITLE

PAGE NO.	COLM NO.	LINE NO.	NATIONAL STOCK NUMBER	REFERENCE NO.	FIGURE NO.	ITEM NO.	TOTAL NO. OF MAJOR ITEMS SUPPORTED	RECOMMENDED ACTION

PART III - REMARKS *(Any general remarks or recommendations, or suggestions for improvement of publications and blank forms. Additional blank sheets may be used if more space is needed.)*

TYPED NAME, GRADE OR TITLE	TELEPHONE EXCHANGE/AUTOVON, PLUS EXTENSION	SIGNATURE

USAPA V3.01

RECOMMENDED CHANGES TO PUBLICATIONS AND BLANK FORMS For use of this form, see AR 25-30; the proponent agency is OAASA	Use Part II *(reverse)* for Repair Parts and Special Tool Lists (RPSTL) and Supply Catalogs/Supply Manuals (SC/SM).	DATE
TO: *(Forward to proponent of publication or form) (Include ZIP Code)*	**FROM:** *(Activity and location) (Include ZIP Code)*	

PART I - ALL PUBLICATIONS (EXCEPT RPSTL AND SC/SM) AND BLANK FORMS

PUBLICATION/FORM NUMBER	DATE	TITLE
TM 10-5430-245-13&P	23 May 2006	Drum, Fabric, Collapsible, Drinking Water, 500 Gal.

ITEM	PAGE	PARA-GRAPH	LINE	FIGURE NO.	TABLE	RECOMMENDED CHANGES AND REASON

** Reference to line numbers within the paragraph or subparagraph.*

TYPED NAME, GRADE OR TITLE	TELEPHONE EXCHANGE/AUTOVON, PLUS EXTENSION	SIGNATURE

TO: *(Forward direct to addressee listed in publication)*	**FROM:** *(Activity and location) (Include ZIP Code)*	DATE

PART II - REPAIR PARTS AND SPECIAL TOOL LISTS AND SUPPLY CATALOGS/SUPPLY MANUALS

PUBLICATION NUMBER	DATE	TITLE

PAGE NO.	COLM NO.	LINE NO.	NATIONAL STOCK NUMBER	REFERENCE NO.	FIGURE NO.	ITEM NO.	TOTAL NO. OF MAJOR ITEMS SUPPORTED	RECOMMENDED ACTION

PART III - REMARKS *(Any general remarks or recommendations, or suggestions for improvement of publications and blank forms. Additional blank sheets may be used if more space is needed.)*

TYPED NAME, GRADE OR TITLE	TELEPHONE EXCHANGE/AUTOVON, PLUS EXTENSION	SIGNATURE

USAPA V3.01

The Metric System and Equivalents

Linear Measure

1 centimeter = 10 millimeters = .39 inch
1 decimeter = 10 centimeters = 3.94 inches
1 meter = 10 decimeters = 39.37 inches
1 dekameter = 10 meters = 32.8 feet
1 hectometer = 10 dekameters = 328.08 feet
1 kilometer = 10 hectometers = 3,280.8 feet

Weights

1 centigram = 10 milligrams = .15 grain
1 decigram = 10 centigrams = 1.54 grains
1 gram = 10 decigrams = .035 ounce
1 dekagram = 10 grams = .35 ounce
1 hectogram = 10 dekagrams = 3.52 ounces
1 kilogram = 10 hectograms = 2.2 pounds
1 quintal = 100 kilograms = 220.46 pounds
1 metric ton = 10 quintals = 1.1 short tons

Liquid Measure

1 centiliter = 10 milliliters = .34 fl. ounce
1 deciliter = 10 centiliters = 3.38 fl. ounces
1 liter = 10 deciliters = 33.81 fl. ounces
1 dekaliter = 10 liters = 2.64 gallons
1 hectoliter = 10 dekaliters = 26.42 gallons
1 kiloliter = 10 hectoliters = 264.18 gallons

Square Measure

1 sq. centimeter = 100 sq. millimeters = .155 sq. inch
1 sq. decimeter = 100 sq. centimeters = 15.5 sq. inches
1 sq. meter (centare) = 100 sq. decimeters = 10.76 sq. feet
1 sq. dekameter (are) = 100 sq. meters = 1,076.4 sq. feet
1 sq. hectometer (hectare) = 100 sq. dekameters = 2.47 acres
1 sq. kilometer = 100 sq. hectometers = .386 sq. mile

Cubic Measure

1 cu. centimeter = 1000 cu. millimeters = .06 cu. inch
1 cu. decimeter = 1000 cu. centimeters = 61.02 cu. lathes
1 cu. meter = 1000 cu. decimeters = 35.31 feet

Approximate Conversion Factors

To change	*To*	*Multiply by*
inches	centimeters	2.540
feet	meters	.305
yards	meters	.914
miles	kilometers	1.609
square inches	square centimeters	6.451
square feet	square meters	.093
square yards	square meters	.836
square miles	square kilometers	2.590
acres	square hectometers	.405
cubic feet	cubic meters	.028
cubic yards	cubic meters	.765
fluid ounces	milliliters	29.573
pints	liters	.473
quarts	liters	.946
gallons	liters	3.785
ounces	grams	28.349
pounds	kilograms	.454
short tons	metric tons	.907
pound-feet	newton-meters	1.356
pound-inches	newton-meters	.11296

To change	*To*	*Multiply by*
ounce-inches	newton-meters	.007062
centimeters	inches	.394
meters	feet	3.280
meters	yards	1.094
kilometers	miles	.621
square centimeters	square inches	.155
square meters	square feet	10.764
square meters	square yards	1.196
square kilometers	square miles	.386
square hectometers	acres	2.471
cubic meters	cubic feet	35.315
cubic meters	cubic yards	1.308
milliliters	fluid ounces	.034
liters	pints	2.113
liters	quarts	1.057
liters	gallons	.264
grams	ounces	.035
metric tons	short tons	1.102
kilograms	pounds	2.205

Temperature (Exact)

ºF Fahrenheit temperature 5/9 (after subtracting 32) ºC Celsius temperature

PIN: 083167-000