TM 5-5420-203-14

This manual Supersedes TM 5-5420-203-14, dated 26 October 1972.

TECHNICAL MANUAL

OPERATOR'S, UNIT, DIRECT SUPPORT, AND GENERAL SUPPORT MAINTENANCE

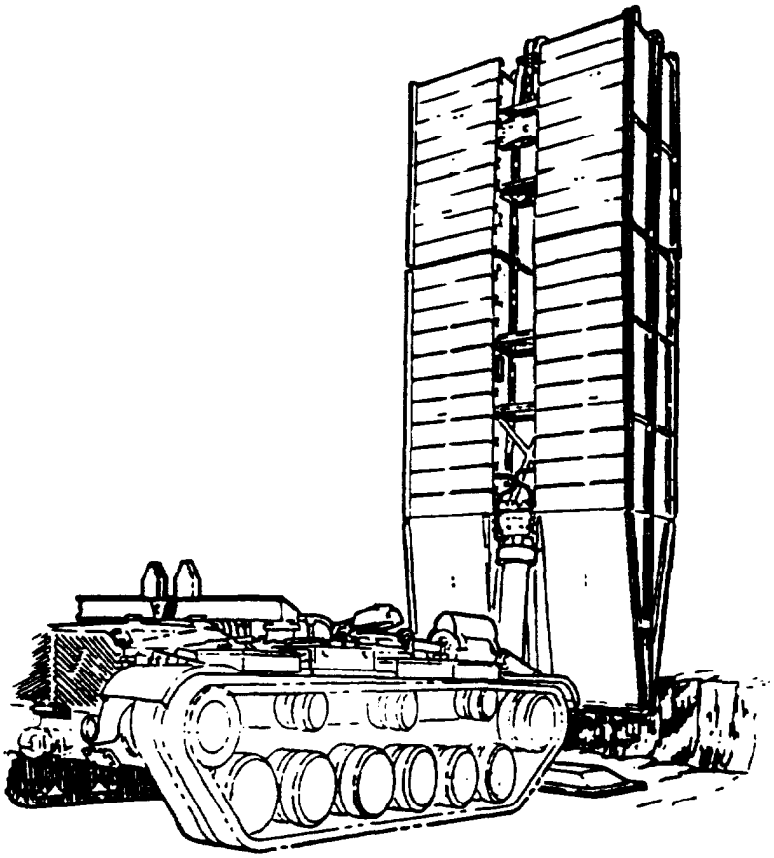

HOW TO USE THIS MANUAL	iii
OPERATING INSTRUCTIONS	2-1
PREVENTIVE MAINTENANCE CHECKS AND SERVICES	2-3
MAINTENANCE PROCEDURES	3-1
TROUBLESHOOTING	3-2
DIRECT SUPPORT AND GENERAL SUPPORT MAINTENANCE	4-1
MAINTENANCE ALLOCATION CHART	B-1
COMPONENTS OF END ITEM AND BASIC ISSUE ITEMS LIST	C-1
EXPENDABLE/DURABLE SUPPLIES AND MATERIALS LIST	D-1
REPLACEMENT PARTS LIST	E-1
INDEX	Index-1

BRIDGE, ARMORED-VEHICLE LAUNCHED: SCISSORING TYPE CLASS 60 & CLASS 70 ALUMINUM, 60 FOOT SPAN; FOR M48A5 AND M60 LAUNCHER (ALL MAKES AND MODELS) CLASS 60 (5420-00-522-9599) CLASS 70 (5420-01-390-3933)

APPROVED FOR PUBLIC RELEASE; DISTRIBUTION IS UNLIMITED.

HEADQUARTERS, DEPARTMENT OF THE ARMY **JUNE 1991**
Change 2

WARNING

FRH hydraulic fluid may contain Tricresyl Phosphate which, if taken internally, can cause paralysis. Hydraulic fluid maybe absorbed through the skin. If hydraulic fluid gets on skin, wash thoroughly with soap and water as soon as possible.

WARNING

Welding produces fumes and gases that are hazardous and can cause injury. Arc rays can injure eyes and burn skin. Electric shock can kill. Read and understand the manufacturer's instructions and local safety regulations. Keep your head out of the fumes. Use enough ventilation, exhaust at the arc, or both, to keep fumes and gases from your breathing zone and the general area. Special care should be taken when welding galvanized, plated, or painted parts to avoid exposure to toxic fumes. Wear correct eye, ear, and body protection. Do not touch live electrical parts. Wear welders gloves when inserting electrode in holder. Do not let electrode touch any unprotected part of your body. See American National Standard Z49.1 "Safety in Welding and Cutting" published by the American Welding Society; OSHA Safety and Health Standards, 29 CFR 1910. In case of emergency, refer to FM 21-11 (First Aid for Soldiers) and seek medical aid.

WARNING

The scissor cylinder is heavy and can easily crush fingers or hands. If it were to fall, it could cause severe injury or death. Stay out from under the scissor cylinder at all times. Never have fingers between the cylinder and parts of the bridge. In case of injury, refer to FM21- 11 (First Aid for Soldiers) and seek medical aid.

WARNING

Do not raise sections off the ground to hook up hydraulic connections. The section could fall causing serious injury or death. In case of injury, refer to FM 21-11 (First Aid for Soldiers) and seek medical aid.

WARNING

Keep hands and feet clear of sections when placing in position to pin. The sections are heavy and can crush your fingers, hand, and feet. In case of injury, refer to FM21-11 (First Aid for Soldiers) and seek medical aid.

WARNING

The cable beam was not bolted when placed in position. It is very heavy and bulky. It could shift and fall striking fingers, arms and legs. The weight of the cable beam could sever fingers, or severely cut hands, legs or feet. Have one crewmember hold the cable beam in position while a second crewmember attaches the components or hardware. In case of injury, refer to FM 21-11 (First Aid for Soldiers) and seek medical aid.

WARNING

Working with the cables, equalizer plate, scissor cylinder, and attaching hardware provides the chance of injury by crushing. Personnel maybe injured if a component slips or is dropped. Keep hands, fingers, arms, and legs clear when possible. In case of injury, refer to FM 21-11 (First Aid for Soldiers) and seek medical aid.

WARNING

The bridge can crush hands and feet Keep hands and feet clear at all times while bridge is lifted. In case of injury, refer to FM21-11 (First Aid for Soldiers) and seek medical aid.

WARNING

Due to the noise of the engine, communication between the dismounted crewmember and the operator will be strained. Ensure that a visible hand signal is used and the meaning of such hand signal understood. Early operation of the hold down cylinder could result in the hands or fingers of the crewmember being severely injured or severed. Take all necessary precautions so as to preclude injury. In case of injury, refer to FM 21-11 (First Aid for Soldiers) and seek medical aid.

WARNING

The AVLB and the launcher are extremely heavy. You can be crushed by the weight. Always wear your helmet when operating the AVLB. If the AVLB begins to turn over, DO NOT ATTEMPT TO EXIT THE VEHICLE. Remain inside and brace your position with your hands and feet. Do not have fingers or hands in the vicinity of the turret cover. If the AVLB tilts to the extent the launcher turns over, immediately kill the engine, abandon the launcher, and remove injured personnel to a safe distance. In case of injury, refer to FM 21-11 (First Aid for Soldiers) and seek medical aid.

WARNING

If the AVLB tilts to the extent that the launcher turns over, immediately abandon the launcher and remove injured personnel to a safe distance. In case of injury, refer to FM 21-11 (First Aid for Soldiers) and seek medical aid.

WARNING

Working with a jack is dangerous. The jack could slip and exit the work area with unbelievable force causing injury or death to personnel. The bridge could sideslip and fall. All unessential personnel should remain clear of the immediate area where the jacking occurs. No one should be present under the lifted area of the bridge at any time. Keep hands, legs, and fingers clear at all times. In case of injury, refer to FM21-11 (First Aid for Soldiers) and seek medical aid.

WARNING

Cables under a strain may break. The bridge may shift and fall from its supports or a component may fail causing the release of the towing cable. Any of these can cause injury or death. Remain clear of the immediate area at all times when the AVLB is being towed. Never place yourself in a position where a cable could strike you or where the bridge or a component may hit you.

WARNING

The following recovery technique is extremely dangerous and should only be attempted when time is not a factor and engineering support is available. The crane could tilt resulting in the bridge being dropped into the gully, ravine, or stream. This, in turn, could pull the towing vehicle or the crane to the edge and possibly into the gully, ravine, or stream. Personnel operating the equipment will be in danger; therefore, ensure the best operators available are used. CEASE OPERATIONS AT ANY TIME IF THERE IS IMMINENT DANGER. In case of injury, seek medical aid.

WARNING

The bridge weighs 29,300 pounds. It may shift, slip or slide from the lowbed. When removing tiedowns from the bridge, do so carefully. Maintain constant eye contact with the bridge. Have one crew member watch the bridge for evidence of slipping, etc. If bridge begins to slip, jump clear and to the opposite direction. Watch when removing chains. Chains may be under tension and a backlash may occur. Chain binders are under tension. Take care when releasing. The handle may come back fast, striking you on the arm or face. Serious injury or death may occur. Know the results of your actions before you do them.

WARNING

Early operation of the holddown cylinder could result in the hands or fingers of the crew member being severely injured or severed. Take all necessary precautions so as to preclude injury. In case of injury, immediately take actions to control bleeding (refer to FM -21-11, First Aid for Soldiers) and seek medical help.

WARNING

Working on, around, or under a suspended bridge is dangerous. Bridges may fall due to a failure in the hydraulics or a mechanical break. Never turn your back on a suspended bridge. Maintain an orderly work area and remain free of tangled cables, chains, etc.

WARNING

Ensure the bridge is secure and stable on the lowbed prior to disconnecting tongue from bridge. If not properly seated and in a stable state, bridge could shift rapidly and fall. You could be crushed. Stay clear of bridge when the tongue is being removed. Inspect for stability before continuing operation.

WARNING

The lifting components, or the sling could break releasing the bridge. The bridge can crush you. Remain clear at all times unless performing a required task.

WARNING

The bridge weighs 29,300 pounds When working with the bridge above the ground, personnel could be injured. The bridge may fall, a line may “part”, or a piece of equipment could break. Any of these could cause the release of the bridge resulting in severe injury or death to personnel. Remain clear of the bridge at all times when it is elevated. Never stand under a raised bridge. Always be at least 35 feet away from the bridge unless performing a required job. In case of injury. refer to FM 21-11 (First Aid for Soldiers) and seek medical aid.

WARNING

When performing the following procedures the possibility exists for injury to personnel from crushing. Remain clear at all times when not performing a required task. Maintain constant sight of the bridge any time it is suspended above the ground. Select the best route to escape injury in the event of a failure Keep hands and feet clear at all times. Be sure of your footing. Watch for oily, slippery surfaces that may cause a fall Refer to FM 21-11 (First Aid for Soldiers) for emergency medical procedures.

WARNING

The boom of the crane will conduct electricity and may strike other obstacles during its operation. Look up and around the work site and BE SURE that there are no aerial obstacles or power lines that could come into contact with the boom of the crane, cables, or the bridge during this operation. In case of shock, seek immediate medical help. Refer to FM 21-11 (First Aid for Soldiers) for emergency medical procedures.

WARNING

Attaching the lifting brackets, slings, and crane cables will require that riggers will be working off the ground. The bridge may be slippery due to hydraulic film on the surfaces. A fall could result in serious injury and death. Move with care when on the bridge. Be sure of your footing. Hold on to any available cable or parts of the bridge when possible. Remove all sharp objects from pockets. Refer to FM 21-11 (First Aid for Soldiers) for emergency medical procedures.

WARNING

The ramp end lifting bar is heavy and may slip out of receivers when not in a strain. The bar could slip and cause serious injury. Stand opposite the open 'V' of the receivers to remove the sling. Refer to FM 21-11 (First Aid for Soldiers) for emergency medical procedures.

WARNING

Scissor cylinder may pitch up or down when disconnected. Be prepared for this. Do not have fingers or hands located where they may be crushed by the cylinder. Also, the scissor cylinder is heavy and can crush you. Remain clear of the cylinder when it is suspended. Refer to FM 21-11 (First Aid for Soldiers) for emergency medical procedures.

WARNING

The scissoring cables, equalizer plate, and pin are heavy. They could slip and fall and crush hands or feet. Remain clear of cables and equalizer plate. In case of injury, refer to FM 21-11 (First Aid for Soldiers) and seek medical aid.

WARNING

Broken cable strands can cause injury to hands by puncture. Wear gloves when handling cables. In case of injury, refer to FM 21-11 (First Aid for Soldiers) and seek medical aid.

WARNING

Bridge may shift during connecting procedure. Do not stand on ground, stand on the bridge deck when launcher is mating to diaphragm.

CHANGE

NO. 3

HEADQUARTERS
DEPARTMENT OF THE ARMY
Washington, D.C., 13 February 2007

OPERATOR'S, UNIT, DIRECT SUPPORT AND GENERAL SUPPORT TECHNICAL MANUAL
BRIDGE, ARMORED- VEHICLE LAUNCHED:
SCISSORING TYPE CLASS 60 & CLASS 70
ALUMINUM, 60 FOOT SPAN;
FOR
M48A5 AND M60 LAUNCHER
(ALL MAKES AND MODELS)

CLASS 60 (5420-00-522-9599)
CLASS 70 (5420-01-390-3933)

TM 5-5420-203-14, dated 3 June 1991, is changed as follows:

1. Remove old pages and insert new pages as indicated below.
2. New or changed material is indicated by a vertical bar in the margin of the page.

Remove Pages	Insert Pages
i and ii	i and ii
4-3/(4-4 blank)	4-3 and 4-4
None	4-5/(4-6 blank)
5-1 and 5-2	5-1 and 5-2
None	5-3/(5-4 blank)
B-5/(B-6 blank)	B-5/(B-6 blank)
E-1/(E-2 blank)	E-1/(E-2 blank)
2028 Sample and 2028 (Sample Back)	None
2028 Front and 2028 Back	2028 Front and 2028 Back
2028 Front and 2028 Back	2028 Front and 2028 Back
2028 Front and 2028 Back	2028 Front and 2028 Back

DISTRIBUTION STATEMENT A. Approved for public release; distribution is unlimited.

File this change sheet in front of the publication for reference purposes.

By Order of the Secretary of the Army:

Official:

JOYCE E. MORROW
Administrative Assistant to the
Secretary of the Army
0701708

PETER J. SCHOOMAKER
General, United States Army
Chief of Staff

DISTRIBUTION: To be distributed in accordance with the initial distribution number (IDN) 371232 requirements for TM 5-5420-203-14.

CHANGE
NO. 2

HEADQUARTERS
DEPARTMENT OF THE ARMY
Washington D.C., 6 June 1997

TECHNICAL MANUAL
OPERATOR'S, UNIT, DIRECT SUPPORT,
AND
GENERAL SUPPORT MAINTENANCE
BRIDGE, ARMORED-VEHICLE LAUNCHED:
SCISSORING TYPE:
CLASS 60 AND CLASS 70
ALUMINUM; 60 FOOT SPAN;

FOR

M48A5 AND M60 LAUNCHER
(ALL MAKES AND MODELS)

MLC 60 NSN 5420-00-522-9599
MLC 70 NSN 5420-01-390-3933

TM 5-5420-203-14, dated 3 June 1991, is changed as follows:

1. Remove old pages and insert new pages as indicated below.

2. New or changed material is indicated by a vertical bar in the margin of the page.

3. Added or revised illustrations are indicated by a pointing hand adjacent to the illustration.

Remove Pages	**Insert Pages**
c and d	c and d
i and ii	i and ii
1-1 through 1-16	1-1 through 1-19/(1-20 blank)
2-1 through 2-16	2-1 through 2-16
2-31 and 2-32	2-31 and 2-32
2-35 through 2-78	2-35 through 2-115/(2-116 blank)
3-7 through 3-12	3-7 through 3-12
3-57 and 3-58	3-57 and 3-58
	3-77 through 3-80
C-1 through C-6	C-1 through C-10
Index-1 through Index-9/(Index 10 blank)	Index 1 through Index 10
Front Cover	Front Cover

File this change in front of the publication for reference purposes

Approved for public release: Distribution is unlimited.

By Order of the Secretary of the Army:

DENNIS J. REIMER
General, United Stares Army
Chief of Staff

Official:

JOEL B. HUDSON
Administrative Assistant to the
Secretary of the Army
03591

DISTRIBUTION:

To be distributed in accordance with the initial distribution number (IDN) 371232, requirements for TM5-5420-203-14.

CHANGE

No. 1

HEADQUARTERS
DEPARTMENT OF THE ARMY
Washington D. C., 5 *March 1993*

TECHNICAL MANUAL

OPERATOR'S, UNIT, DIRECT SUPPORT,

AND

GENERAL SUPPORT MAINTENANCE

BRIDGE, ARMORED-VEHICLE-LAUNCHED

SCISSORING TYPE: ALUMINUM; 60 FOOT SPAN

FOR

M48A5 AND M60 LAUNCHER

(ALL MAKES AND MODELS)

NSN 5400-00-522-9599

TM5-5420-203-14, dated 3 June 1991 is changed as follows:

1. Remove old pages and insert new pages as indicated below.

2. New or changed material is indicated by a vertical bar in the margin of the page.

3. Added or revised illustrations are indicated by a vertical bar adjacent to the illustration.

Remove Pages	*Insert Pages*
1-13 thru 1-15/(1-16 blank)	1-13 thru 1-16

4. File this change sheet in front of the publication for reference purposes.

By Order of the Secretary of the Army:

GORDON R. SULLIVAN
General, United States *Army*
Chief of Staff

Official:

MILTON H. HAMILTON
Administrative Assistant to the
Secretary of the Army
04092

Distribution:

To be distributed in accordance with DA Form 12-37-E (Block 1232) requirements for TM5-5420-203-14.

DISTRIBUTION STATEMENT C — Distribution authorized to U.S. Government agencies and their contractors for administrative and operational purposes only. This determination was made on 4 May 89, Other requests for this document will be referred to: Commander, U.S. Army Tank-Automotive Command, ATTN: AMSTA-MB, Warren, MI 48397-5000.
DESTRUCTION NOTICE — Destroy by any method that will prevent disclosure of contents or reconstruction of the document.

LIST OF EFFECTIVE PAGES

INSERT LATEST CHANGED PAGES. DESTROY SUPERSEDED PAGES.

Note: The portion of the text affected by the changes is indicated by a vertical line or an asterisk.

Dates of issue for original and changed pages are:

Original __ 0 ..... 3 June 1991
Change .... 1 ..... 5 March 1993
Change .... 2 ..... 6 June 1997
Change .... 3 ..... 13 February 2007

TOTAL NUMBER OF PAGES IN THIS PUBLICATION IS 762, CONSISTING OF THE FOLLOWING:

Page No.	*Change No.	Page No.	*Change No.	Page No.	*Change No.
Front Cover	2	2-8.2 ADDED	2	2-47	2
Front Cover Back BLANK	2	2-8.3 ADDED	2	2-48	2
CTP C3	3	2-8.4 ADDED	2	2-49	2
CTP C3 Back	3	2-8.5 ADDED	2	2-50	2
CTP C2	2	2-8.6 ADDED	2	2-51	2
CTP C2 Back	2	2-8.7 ADDED	2	2-52	2
CTP C1	1	2-8.8 ADDED	2	2-53	2
CTP C1 Back	1	2-8.9 ADDED	2	2-54	2
a	0	2-8.10 ADDED	2	2-55	2
b	0	2-9	2	2-56	2
c	2	2-10 BLANK	2	2-57	2
d	2	2-11	2	2-58	0
e	0	2-12	2	2-59	2
f BLANK	0	2-13	2	2-60	2
i	2	2-14	2	2-61	2
ii	2	2-15	2	2-62	2
iii	0	2-16	2	2-63	2
iv	0	2-17	0	2-64	0
1-1	2	2-18	0	2-65	2
1-2	2	2-19	0	2-66	2
1-3	2	2-20	0	2-67	2
1-4	2	2-21	0	2-68	0
1-5	2	2-22	0	2-69	2
1-6	2	2-23	0	2-70	0
1-7	2	2-24	0	2-71	2
1-8	2	2-25	0	2-72	0
1-9	2	2-26	0	2-73	2
1-10	2	2-27	0	2-74	0
1-11	2	2-28	0	2-75	2
1-12	2	2-29	0	2-76	0
1-13	2	2-30	0	2-77	0
1-14	2	2-31	2	2-78	2
1-15	2	2-32	2	2-79	2
1-16	2	2-33	0	2-80	2
1-17	2	2-34	0	2-81	2
1-18	2	2-35	2	2-82	2
1-19	2	2-36	2	2-83	2
1-20 BLANK	2	2-37	2	2-84	2
2-1	2	2-38	2	2-85	2
2-2	2	2-39	2	2-86	2
2-3	2	2-40	2	2-87	2
2-4	2	2-41	2	2-88	2
2-5	2	2-42	2	2-89	2
2-6	2	2-43	2	2-90	2
2-7	2	2-44	2	2-91	2
2-8	2	2-45	2	2-92	2
2-8.1 ADDED	2	2-46	2	2-93	2

***Zero in this column indicates an original** page.

Page No.	*Change No.
2-94	2
2-95	2
2-96	2
2-97	2
2-98	2
2-99	2
2-100	2
2-101	2
2-102	2
2-103	2
2-104	2
2-105	2
2-106	2
2-107	2
2-108	2
2-109	2
2-110	2
2-111	2
2-112	2
2-113	2
2-114	2
2-115	2
2-116 BLANK	2
3-1	0
3-2	0
3-3	0
3-4	0
3-5	0
3-6	0
3-7	0
3-8	2
3-9	2
3-10	2
3-11	0
3-12	2
3-13	0
3-14	0
3-15	0
3-16	0
3-17	0
3-18	0
3-19	0
3-20	0
3-21	0
3-22	0
3-23	0
3-24	0
3-25	0
3-26	0
3-27	0
3-28	0
3-29	0
3-30	0
3-31	0
3-32	0
3-33	0
3-34	0
3-35	0
3-36	0
3-37	0
3-38	0

Page No.	*Change No.
3-39	0
3-40	0
3-41	0
3-42	0
3-43	0
3-44	0
3-45	0
3-46	0
3-47	0
3-48	0
3-49	0
3-50	0
3-51	0
3-52	0
3-53	0
3-54	0
3-55	0
3-56	0
3-57	2
3-58	0
3-59	0
3-60	0
3-61	0
3-62	0
3-63	0
3-64	0
3-65	0
3-66	0
3-67	0
3-68	0
3-69	0
3-70	0
3-71	0
3-72	0
3-73	0
3-74	0
3-75	0
3-76	0
3-77	2
3-78	2
3-79	2
3-80	2
4-1	0
4-2	0
4-3	0
4-4 BLANK	0
5-1	0
5-2	0
A-1	0
A-2 BLANK	0
B-1	0
B-2	0
B-3	0
B-4	0
B-5	0
B-6 BLANK	0
C-1	2
C-2	2
C-3	2
C-4	2
C-5	2

Page No.	*Change No.
C-6	2
C-7	2
C-8	2
C-9	2
C-10	2
D-1	0
D-2 BLANK	0
E-1	0
E-2 BLANK	0
I-1	2
I-2	2
I-3	2
I-4	2
I-5	2
I-6	2
I-7	2
I-8	2
I-9	2
I-10	2
2028 Front	0
2028 Back	0
2028 Front	0
2028 Back	0
2028 Front	0
2028 Back	0
2028 Front	0
2028 Back	0
Authentication Front	0
Authentication Back BLANK	0
Back Cover Inside	0
Back Cover BLANK	0

***Zero in this column indicates an original** page.

TECHNICAL MANUAL

HEADQUARTERS
DEPARTMENT OF THE ARMY
Washington, D.C., *3 June 1991*

OPERATOR'S, UNIT, DIRECT SUPPORT AND GENERAL SUPPORT MAINTENANCE BRIDGE, ARMORED VEHICLE LAUNCHED SCISSORING TYPE CLASS 60 & CLASS 70 ALUMINUM, 60 FOOT SPAN; FOR M48A5 AND M60 LAUNCHER (ALL MAKES AND MODELS) CLASS 60 (5420-00-522-9599) CLASS 70 (5420-01-390-3933)

REPORTING ERRORS AND RECOMMENDING IMPROVEMENTS

You can help improve this publication. If you find any mistakes or if you know of a way to improve the procedures, please let us know. Submit your DA Form 2028 (Recommended Changes to Equipment Technical Publications), through the Internet, on the Army Electronic Product Support (AEPS) website. The Internet address is https://aeps.ria.army.mil. The DA Form 2028 is located under the Public Applications section in the AEPS Public Home Page. Fill out the form and click on SUBMIT. Using this form on the AEPS will enable us to respond quicker to your comments and better manage the DA Form 2028 program. You may also mail, fax or e-mail your letter or DA Form 2028 direct to: AMSTA-LC-LPIT/TECH PUBS, TACOM-RI, 1 Rock Island Arsenal, Rock Island, IL 61299-7630. The e-mail address is TACOM-TECH-PUBS@ria.army.mil. The fax number is DSN 793-0726 or Commercial (309) 782-0726.

DISTRIBUTION STATEMENT A. Approved for public release; distribution is unlimited.

TABLE OF CONTENTS

		Page
	HOW TO USE THIS MANUAL	iii
CHAPTER 1	INTRODUCTION	1-1
Section I	General Information	1-1
Section II	Equipment Description And Data	1-2
Section III	Principles of Operation	1-19

TABLE OF CONTENTS - CONT

CHAPTER 2 OPERATING INSTRUCTIONS 2-1

Section I Description and Use of Operator's Controls and Indicators 2-1
Section II Preventive Maintenance Checks and Services (PMCS) 2-3
Section III Operations Under Usual Conditions.. 2-11
Section IV Operations Under Unusual Conditions 2-65

CHAPTER 3 MAINTENANCE PROCEDURES 3-1

Section I Lubrication Instructions 3-1
Section II Repair Parts; Special Tools; Test, Measurement, and Diagnostic Equipment (TMDE); and Support Equipment 3-2
Section III Service Upon Receipt 3-2
Section IV Troubleshooting 3-2
Section V Maintenance Procedures 3-8

CHAPTER 4 DIRECT SUPPORT AND GENERAL SUPPORT MAINTENANCE 4-1

Section I Repair Parts; Special Tools; Test, Measurement, and Diagnostic Equipment (TMDE); and Support Equipment 4-1
Section II Hydraulic Cylinder Maintenance 4-1

CHAPTER 5 ADMINISTRATIVE STORAGE OR SHIPMENT 5-1

APPENDIX A REFERENCES.. ..... A-1

APPENDIX B MAINTENANCE ALLOCATION CHART B-1

Section I Introduction B-1
Section II Maintenance Allocation Chart for Armored Vehicle Launched Bridge B-4
Section III Tools and Test Equipment Requirements B-5

APPENDIX C COMPONENTS OF END ITEM AND BASIC ISSUE ITEMS LIST C-1

Section I Introduction C-1
Section II Components of End Item C-2
Section III Basic Issue Items C-10

APPENDIX D EXPENDABLE/DURABLE SUPPLIES AND MATERIALS LIST D-1

Section I Introduction D-1
Section II Expendable Supplies and Materials List D-1

APPENDIX E REPLACEMENT PARTS LIST E-1

INDEX Index-1

HOW TO USE THIS MANUAL

The safest, easiest, and best way to care for, operate and maintain the AVLB is to use this manual. Learning to use this TM is as easy as reading it. Knowing what's in this manual and how to use it will save you time. Becoming familiar with the work, procedures, and cautions will help you in your job and reduce your exposure to unnecessary hazards.

WHERE DO YOU START?

Right here if this is the first time you are using this TM. Be sure to completely read this section on how to use this manual frost. Due to the many parts and procedures involved with the AVLB, this book may seem complicated, but it is not. Go to that area within the TM that covers what you are to do and follow the instructions. Be sure to read and follow the notes, cautions and warnings. They are there for your safety and well-being. They also protect the equipment from harm. There is a lot of information here that you need to know.

HOW THIS MANUAL IS ORGANIZED.

This manual is organized into several types of activities. You will be using this manual to do the necessary work on the AVLB and to find information about its operation and care. Consult the Table of Contents to find the location of the procedures and information found in this TM.

HOW TO FIND PROCEDURES.

Procedures can be found by looking for them in the Table of Contents. For instance, if you want to find how to load or unload the AVLB, those procedures will found listed under Operations, Loading and Unloading the AVLB. Other procedures can be found in the same manner.

HOW TO FIND THE CORRECT PROCEDURE

First, identify by the noun nomenclature what it is you want to work on or what the procedure is you want to do. Then decide if you are removing or replacing an item, or loading it or unloading it, etc. After you have decided what you are going to do, and what it is called, find that in the Table of Contents.

HOW TO USE A PROCEDURE.

The procedure is written in a way that you would normally do a task. The first item you would remove is listed and then the second and so on. The tools needed (if they are not common tools) are called out and how to use them is explained. Checks that must be made during the procedure are identified. A final overall check is called out and explained, where need be. All notes, cautions, and warnings required for your safety and the safety of the equipment are given where and when needed.

COMMON TOOLS.

Common tools are not called out. Common tools are those tools normally found in the mechanic's tool box. Procedures using common tools would be similar to "Remove the two nuts bolts securing the brace to the section".

HOW TO USE THIS MANUAL - CONT

FORMAT This TM is formatted in a manner so it will be easy for you to use. Each task or area of procedures are laid out in a form to make it easy to find.

MAINTENANCE INSTRUCTION Maintenance instructions are found in Chapters 3 and 4 dependent upon the level of maintenance. Specialized instructions/procedures are found within the Chapter designated to the level which will do that maintenance.

TROUBLESHOOTING All troubleshooting of the various systems and components of the Armored Vehicle-Launched Bridge (AVLB) are found in Chapter 3, Troubleshooting.

INDEX An index listing each major and/or significant heading is listed in the index in alphabetical order.

WARNING/CAUTIONS Warnings and Cautions are found where and when needed in this TM. Warnings indicate that serious injury can result from inattention to procedures and improper use of equipment. Read, understand, and adhere to all warnings prior to the task. Cautions indicate that a suitable climate exists for injury and/or damage to the equipment. Read, understand, and adhere to all cautions prior to performing the task.

CHAPTER 1

INTRODUCTION

Section I. GENERAL INFORMATION

1-1. SCOPE.

This manual will be used for maintenance of the Armored Vehicle-Launched Bridge (AVLB). This manual provides information on the receipt, preparation for use, use, maintenance and inspection, repair and storage of the 60-foot span, scissoring type, aluminum bridge. Use and special limitations of the bridge are found in paragraph 1-6.

1-2. MAINTENANCE FORMS AND RECORDS.

Department of the Army forms and procedures used for equipment maintenance will be those prescribed by DA PAM 738-750, The Army Maintenance Management Systems (TAMMS).

1-3. REPORTING EQUIPMENT IMPROVEMENT RECOMMENDATIONS (EIR).

If your equipment needs improvements, let us know. Send us an EIR The user is the only one who can tell us what you do not like about your equipment. Let us know why you do not like the design. Tell us why a procedure is hard to perform. Put the improvement on an SF 368 (Quality Deficiency Report). Mail SF 368 to us at: Commander, U.S. Army Tank-automotive and Armament Command, ATTN: TR-QHB, Warren, MI 48397-5000. We will send you a reply.

1-4. DESTRUCTION OF MATERIEL TO PREVENT ENEMY USE.

Refer to TM 750-244-6, Procedures for Destruction of Tank-Automotive Equipment to Prevent Enemy Use.

1-5. PREPARATION FOR STORAGE OR SHIPMENT.

Administrative storage or shipment procedures are contained in Chapter 5.

Section II. EQUIPMENT DESCRIPTION AND DATA

1-6. EQUIPMENT CHARACTERISTICS, CAPABILITIES, AND FEATURES.

NOTE

There are two bridge configurations. The MLC 60 supports M48 and M60 family of vehicles. The MLC 70 supports M1 family of vehicles.

a. Equipment Characteristics. The bridge is transportable and maneuverable. It can be rapidly deployed to cross small streams, gullies, ravines or enemy placed obstacles. The bridge is a component of the M48 or M60 launcher, riding atop the vehicle. It is hydraulically operated and slaved from the M48 or M60 launcher.

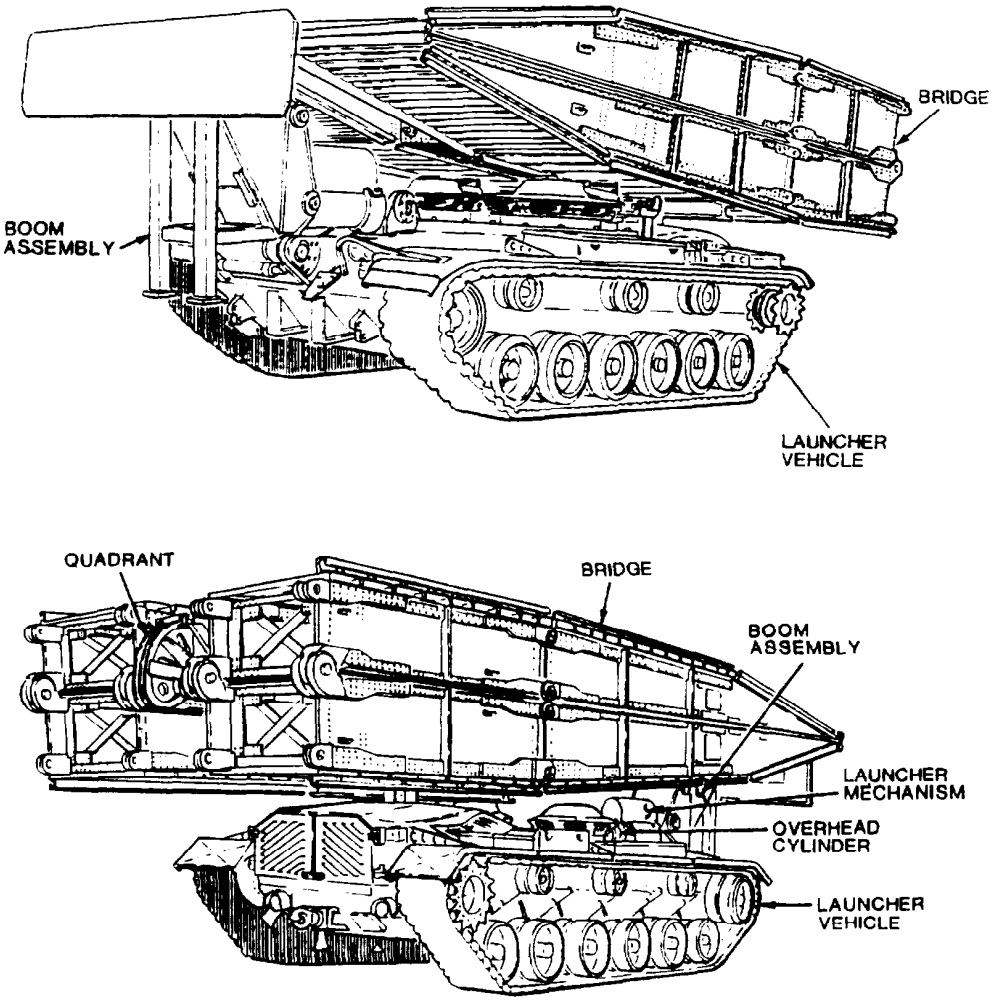

FIGURE 1-1. Bridge Mounted

1-6. EQUIPMENT CHARACTERISTICS, CAPABILITIES, AND FEATURES - CONT

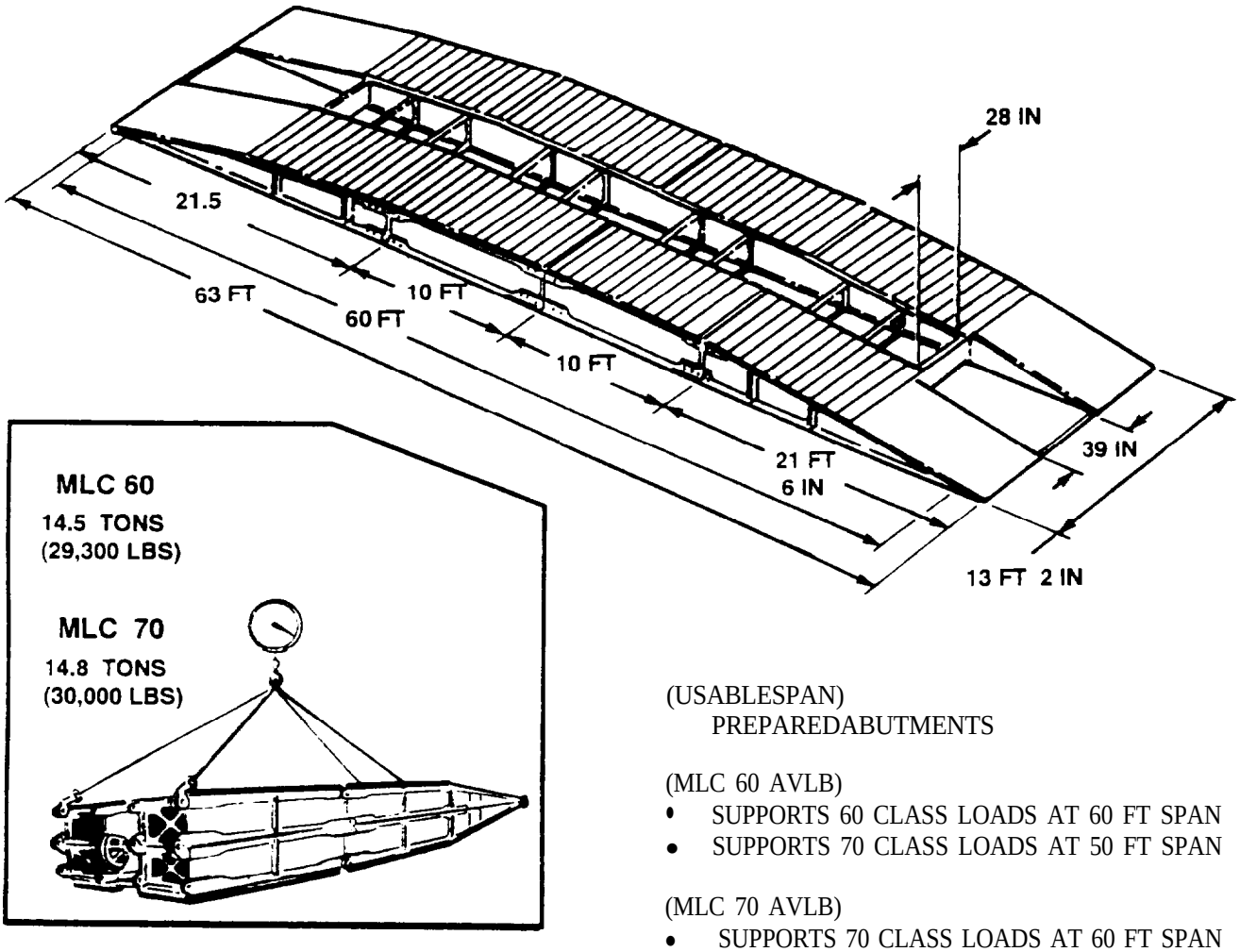

(USABLESPAN)
PREPAREDABUTMENTS

(MLC 60 AVLB)
- SUPPORTS 60 CLASS LOADS AT 60 FT SPAN
- SUPPORTS 70 CLASS LOADS AT 50 FT SPAN

(MLC 70 AVLB)
- SUPPORTS 70 CLASS LOADS AT 60 FT SPAN

(USABLESPAN)
UNPREPAREDABUTMENTS

(MLC 60 AVLB)
- SUPPORTS 60 CLASS LOADS AT 57 FT SPAN
- SUPPORTS 70 CLASS LOADS AT 50 FT SPAN

(MLC 70 AVLB)
- SUPPORTS 70 CLASS LOADS AT 57 FT SPAN

FIGURE 1-2. Bridge Dimensions and Weights.

1-6. EQUIPMENT CHARACTERISTICS, CAPABILITIES, AND FEATURES - CONT

NOTE

The MLC 70 AVLB will support the M-1 tank with no greater risk than the MLC 60 incurs when supporting a normal capacity of class 60.

b. Equipment Capabilities. The MLC 60 bridge has a clear span of 60 ft; (See FIG. 1-2) a normal capacity of Class 50; a caution rating of above 50 MLC; and a risk rating of above 61 MLC. When using caution or risk crossings, usable span is reduced to 50 foot gap. It can accept crossing by the heavier, wider M-l tank. Certain precautions must be followed to reduce the chance of a bridge failure with the M-l tank and will be addressed in the Operating Instructions, Chapter 2. The typical mobility data is as follows:

Ground clearance of vehicle	1 ft, 2 1/4 in.
Overhead clearance required	13 ft, 1 in.
Width..	13 ft, 2 in.
Weight of vehicle and bridge..	63 tons
Grade-ascending ability..	30 %
Vertical obstacle vehicle will climb	1 ft, 6 in.
Width of ditch vehicle will cross..	8 ft, 6 in.
Typical clearance turning radius (average).	44 ft
Fording depth	4 ft
Treadways (width).	5 ft, 2 in.

The launcher (with the bridge mounted) can exceed the rate of troop movement. The route chosen must accommodate the height, width, and weight of the launcher with the bridge mounted. When possible, routes should be taken to avoid serious obstacles, rough terrain, and heavily wooded areas, These routes slow the launcher with the bridge down. The launchers have power for cross-country travel and can make sharp turns. The high center of gravity of the bridge may cause a rocking sensation in the launcher when traveling over rolling terrain with frequent dips and gullies. If this sensation becomes severe, reduce the vehicle speed to solve the problem. The launcher with the bridge mounted requires more fuel.

c. Equipment Features. The bridge has an integral role in the movement of troops and/or supplies. It helps the troops to cross obstacles such as ravines, gullies, creeks, small streams and rivers. It is easily launched and available on the combination carrier/launcher. It is a girder bridge of aluminum alloy and may be launched or retrieved from either end. The bridge is capable of sustained use for months. Extended use or sustained periods of use require frequent inspections to ensure the reliability of the bridge. The bridge can be launched and retrieved either up or down hills with grades of 15%. The bridge may be launched on side slopes up to 8% or any combination of up, down, and side slopes, (see FIGURE 1-3). On level ground the launcher is not affected by muddy or marshy launching sites as long as supportive base does exist. When launching on grades with muddy terrain, use care since the bridge in the raised upright position creates a leveraged extension that can cause the launcher to slide or tilt. These situations and others will be addressed in Chapter 2. Other bridges may be brought into use by a flatbed carrier or a second launcher vehicle. These bridges can then be loaded on launcher vehicles and can move forward with the troops. The bridge is a highly mobile, easily maintained and rapidly deployable component of our combined fighting forces.

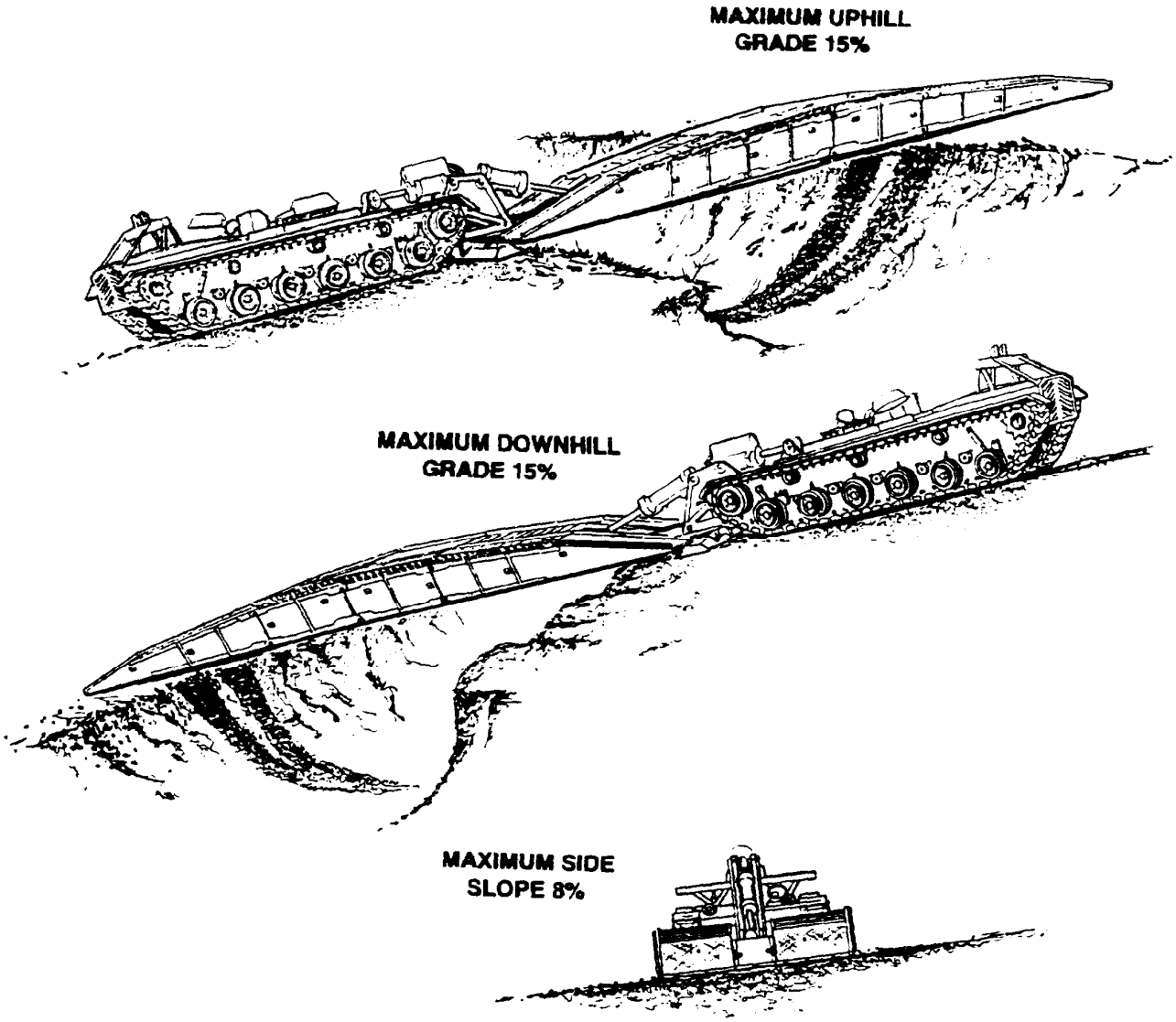

FIGURE 1-3. Maximum Launching Slopes.

1-7. LOCATION AND DESCRIPTION OF MAJOR COMPONENTS.

NOTE

The MLC 70 upgraded bridge folds at the center sections only. The flexible hydraulic lines between ramp sections and center section have been replaced with hard hydraulic piping.

a. AVLB Hydraulic System. The bridge hydraulic system consists of all the components and mechanics required to extend and retrieve the bridge (see FIGURE 1-4). The lines, cylinders and connectors each play a role in the operation of the bridge. The bridge needs 3800 pounds per square inch (PSI) minimum pressure to operate. The hydraulic pump used to generate the pressure is in the launcher. It is driven by the engine through a power take-off and a manual clutch. The control valve bank directs the pressure to the cap or rod end of the actuating cylinder. The fluid is supplied to the bridge by connecting lines and hydraulic cables. These lines and cables are attached to the lines of the bridge by quick-disconnect connectors. The bridge disconnects itself when launched which reduces the exposure of the soldier to enemy fire. The bridge uses FRH type hydraulic fluid. A hydraulic filter is located in the system to remove any impurities that might pollute the system and cause the hydraulics to fail.

b. AVLB Structural System. The structural system is made up of the sections, braces, supports, curbing, and connecting hardware (see FIGURE 1-5). The bridge is made of aluminum with steel rivets and bolts used to secure the components. The scissoring action of the bridge is a result of the extension or retraction of the scissor cylinder. The piston of the scissor cylinder retracts which, in effect, shortens the length of the actuating arm and cables. This results in the extension of the bridge. The reverse of this process allows the bridge to fold under the weight of gravity when it is being held in the upright position. The forces exerted on the scissoring components of the bridge deteriorate the moving components. Frequent checks must be made to make sure the bridge is sound. These checks are addressed in Preventive Maintenance Checks and Services (PMCS) in Chapter 2.

NOTE

The following features readily identify the (MLC 70) AVLB. Refer to Figure 1-5.

- Male and female sections stenciled with 70 enclosed in circle
- Two weight limit signs stenciled with 70 are mounted on far and near rear transverse braces
- Lower pins, securing ramp to center section, replaced by support beam

c. AVLB Major Components. See FIGURE 1-5 for location of bridge components. FIGURE 1-5 also shows the bridge in launched position. Table 1-1 lists the item, quantity, NSN, and item number of the bridge components, Item numbers listed on Table 1-1 correspond to items shown in FIGURE 1-6.

1-7. LOCATION AND DESCRIPTION OF MAJOR COMPONENTS - CONT

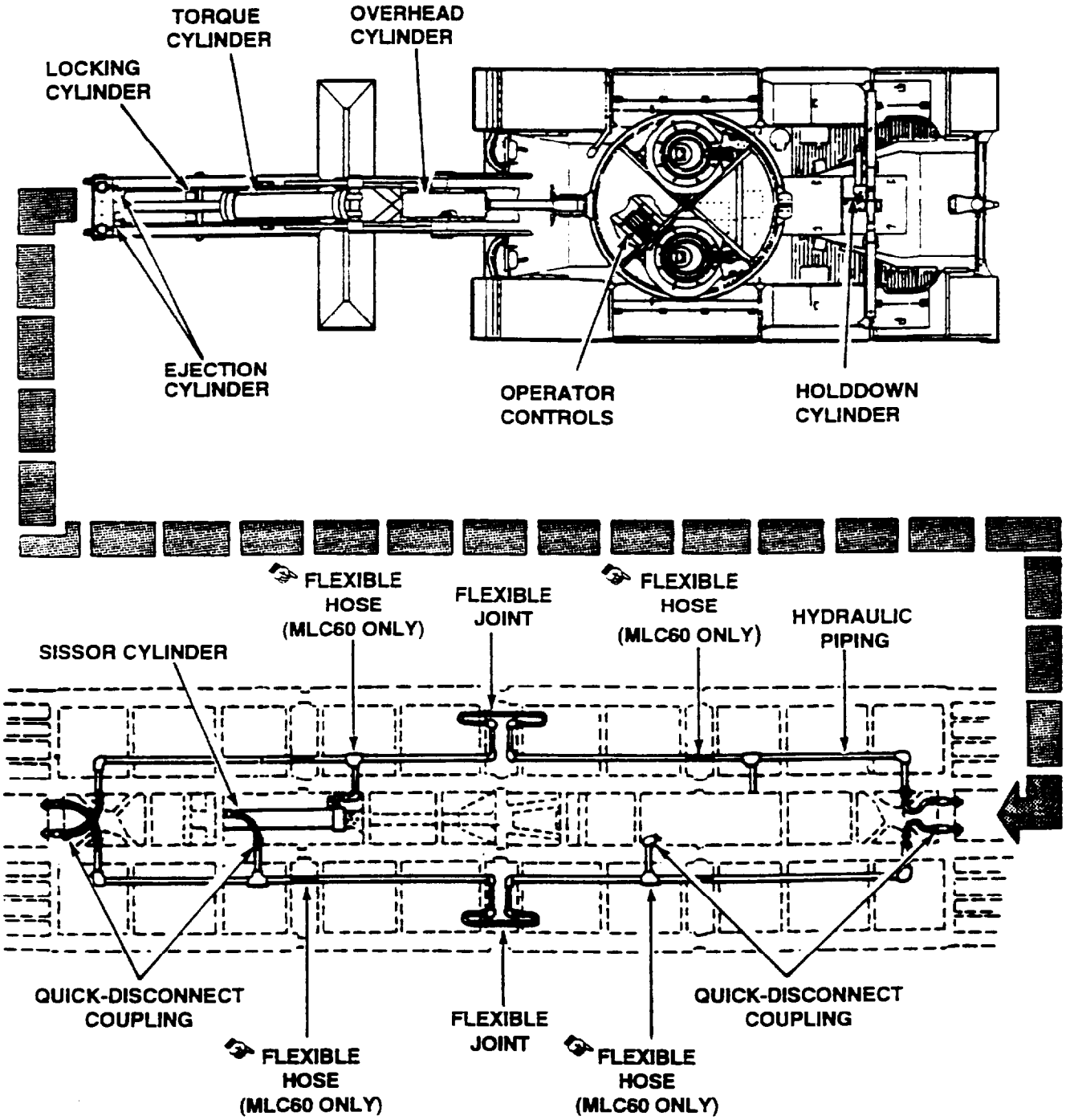

FIGURE 1-4. AVLB Hydraulic System Components.

1-7. LOCATION AND DESCRIPTION OF MAJOR COMPONENTS - CONT

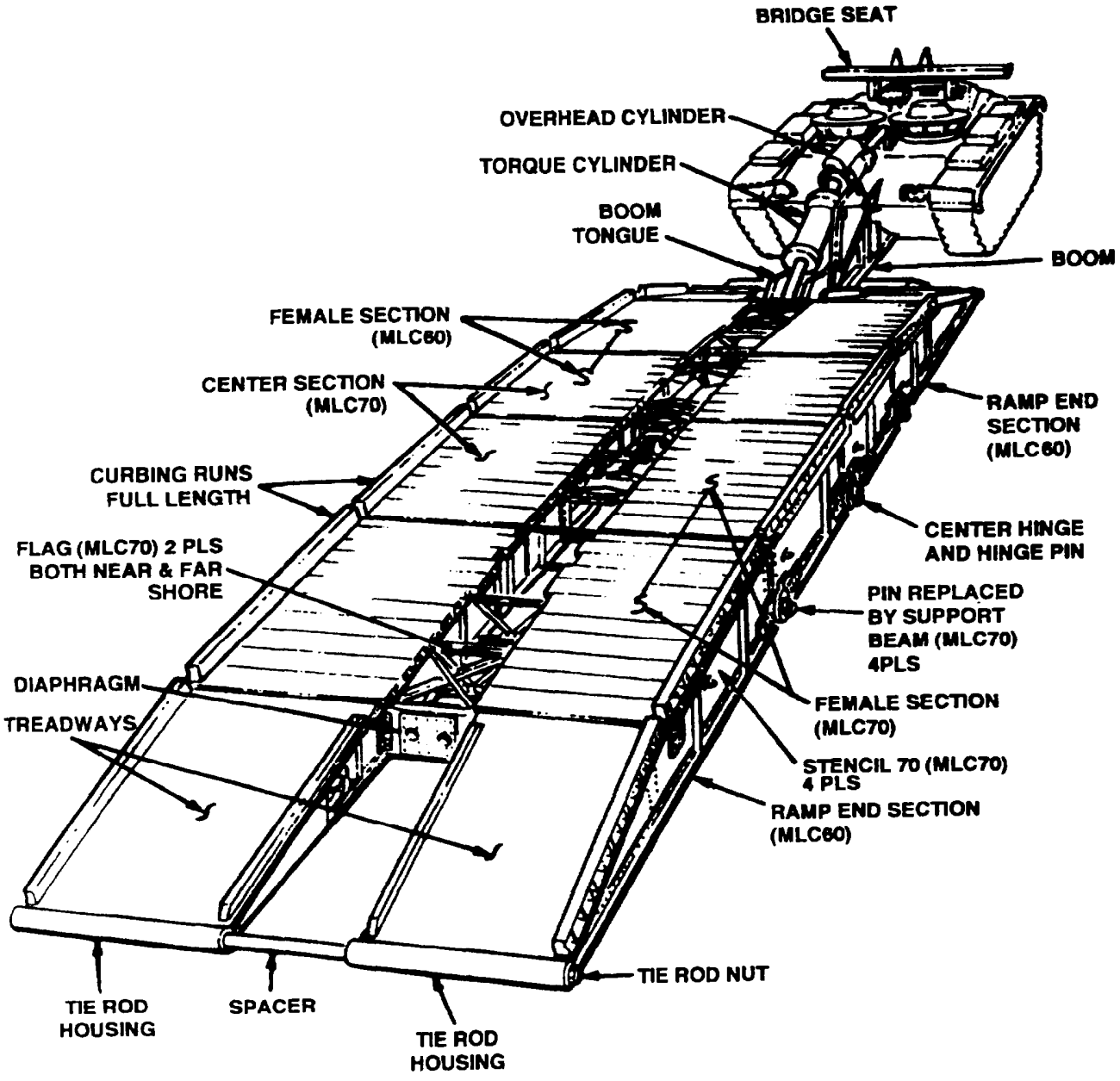

FIGURE 1-5. Structural Components.

Table 1-1. Major Components (MLC 60)

ITEM	QTY	NSN	ITEM NUMBER
Rod, Threaded (Tie)	2	5306-01-136-1186	10
Spacer, Tie Rod	2	5365-01-011-5038	11
Section, Center (Female)	2	5420-00-542-3115	8
Section, Center (Male)	2	5420-00-542-3116	9
Section, Ramp (Male)	2	5420-00-542-3117	2
Section, Ramp (Female)	2	5420-00-542-3118	1
Brace, Lateral	2	5420-00-542-3122	4
Brace, Transverse (Center Section) 42 7/8L x 6 7/8 W x 27 7/8H	4	5420-00-542-3123	7
Brace, Transverse (Ramp Section) 42 7/8L x 5 3/8W x 25H	2	5420-00-542-3124	6
Brace, Transverse (Ramp Section) 42 7/8L x 5 3/8W x 22 5/8H	2	5420-00-542-3125	5
Curb, Ramp (inside) 8 fI 1 in. L	4	5420-00-542-3127	22
Curb, End Section, 12 ft 10 1/2 in. L	4	5420-00-542-3128	21
Curb, Ramp 8 ft 6 3/4 in. L	4	5420-00-542-3129	23
Curb, Deck 9 ft 11 1/2 in. L (Center Section)	4	5420-00-542-3130	20
Quadrant Assembly	1	5420-00-542-3132	18
Plate, Equalizer	1	5420-00-542-3138	17
Strut, Quadrant	2	5420-00-542-3139	19
Cable, Scissoring (Left Lay)	1	5420-00-542-3140	14
Cable, Scissoring (Right Lay)	1	5420-00-542-3141	14
Beam, Cable	1	5420-00-542-3146	15
Plate, Equalizer	1	5420-00-542-3147	24
Beam, Cylinder	1	5420-00-542-3148	12
Diaphragm, Launching	2	5420-00-542-3149	3
Support, Cylinder	2	5420-00-542-3151	13
Cylinder, Actuating (Scissoring)	1	5420-00-542-3155	16
Pins (see Hardware, Table 1-2)			

Table 1-2 Connecting Hardware (MLC 60)

ITEM	QTY	NSN
Pin, Cylinder, Scissoring, 3 1/2 in. Dia x 9 in.	1	5420-00-542-3157
Pin, Equalizer Plate, 3 in. Dia x 6 1/2 in. L	2	5420-00-542-3137
Pin, Panel, Connecting W/Locking Retainer, 3 in. Dia. x 9 3/8 in. L.	16	5420-00-542-3136
Pin, Panel, Center Locking, W/Handle and Lubrication Fitting, 3 in. Dia x 9 7/8 in L.	2	5420-00-682-4517
Pin, Hinge, Quadrant W/Lubrication Fitting, 3 in. Dia x 15 1/8 in. L	2	5420-00-542-3131
Pin, Locking, Quadrant, 3/4 in. Dia x 6 1/2 in. L	4	5420-00-542-3133

1-7. LOCATION AND DESCRIPTION OF MAJOR COMPONENTS - CONT

Table 1-2 Connecting Hardware (MLC 60) - CONT

ITEM	QTY	NSN
Pin, Locking, Retainer, 1 in. Dia x 2 3/8 in. L	2	5420-00-542-3134
Pin, Retainer	2	5420-00-060-7030
Retainer, Cable, 14 in. L, 2 in. W, 1 1/2 in. H	2	5420-00-542-3135
Pin, Locking, Retainer, 1 in. Dia x 2 3/8 in. L	2	5420-00-542-3134

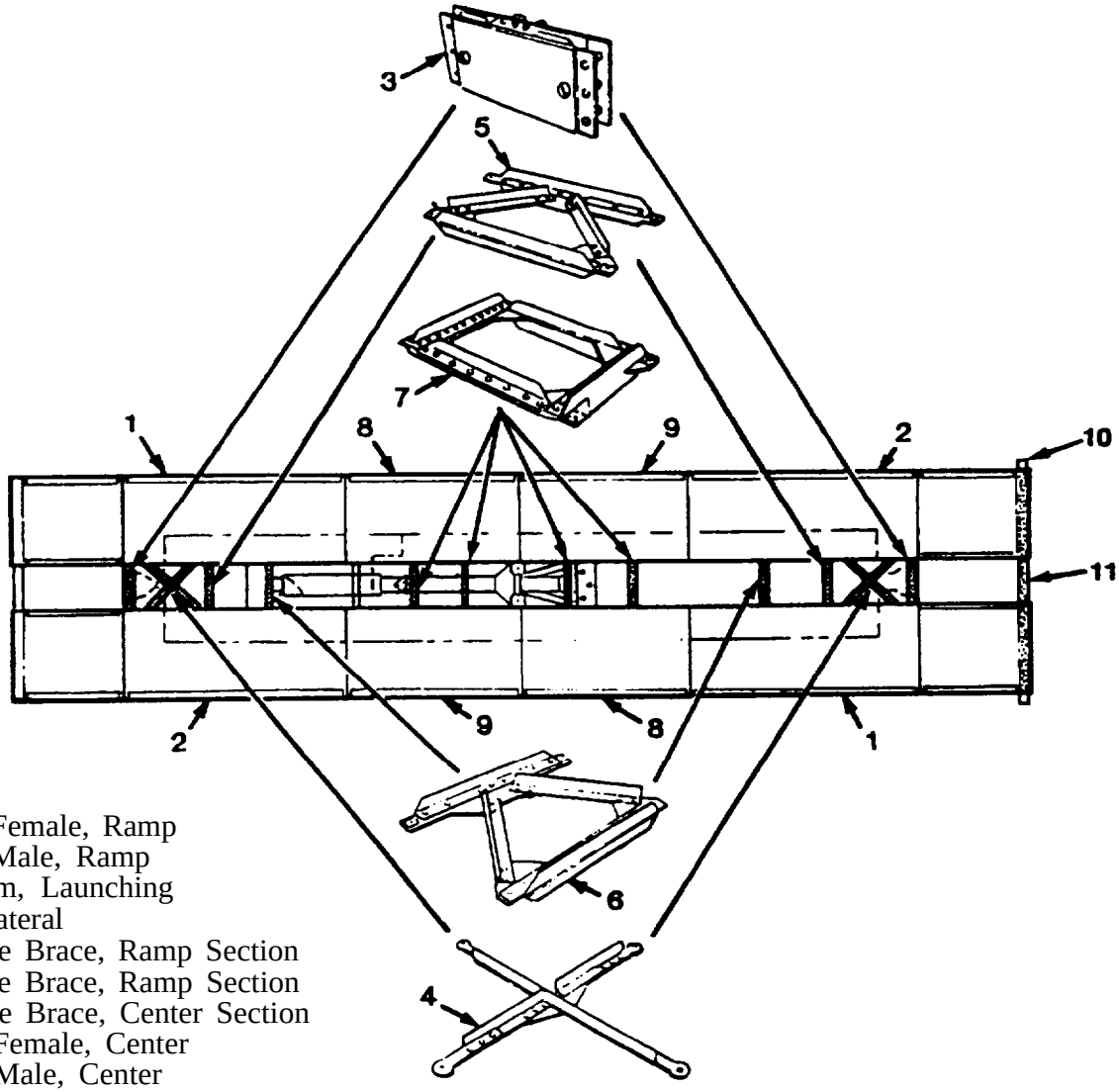

LEGEND:

1. Section, Female, Ramp
2. Section, Male, Ramp
3. Diaphragm, Launching
4. Brace, Lateral
5. Transverse Brace, Ramp Section
6. Transverse Brace, Ramp Section
7. Transverse Brace, Center Section
8. Section, Female, Center
9. Section, Male, Center
10. Rod, Tie
11. Spacer

FIGURE 1-6. Relationship of Major Components (MLC60) (Sheet 1 of 2).

1-7. LOCATION AND DESCRIPTION OF MAJOR COMPONENTS - CONT

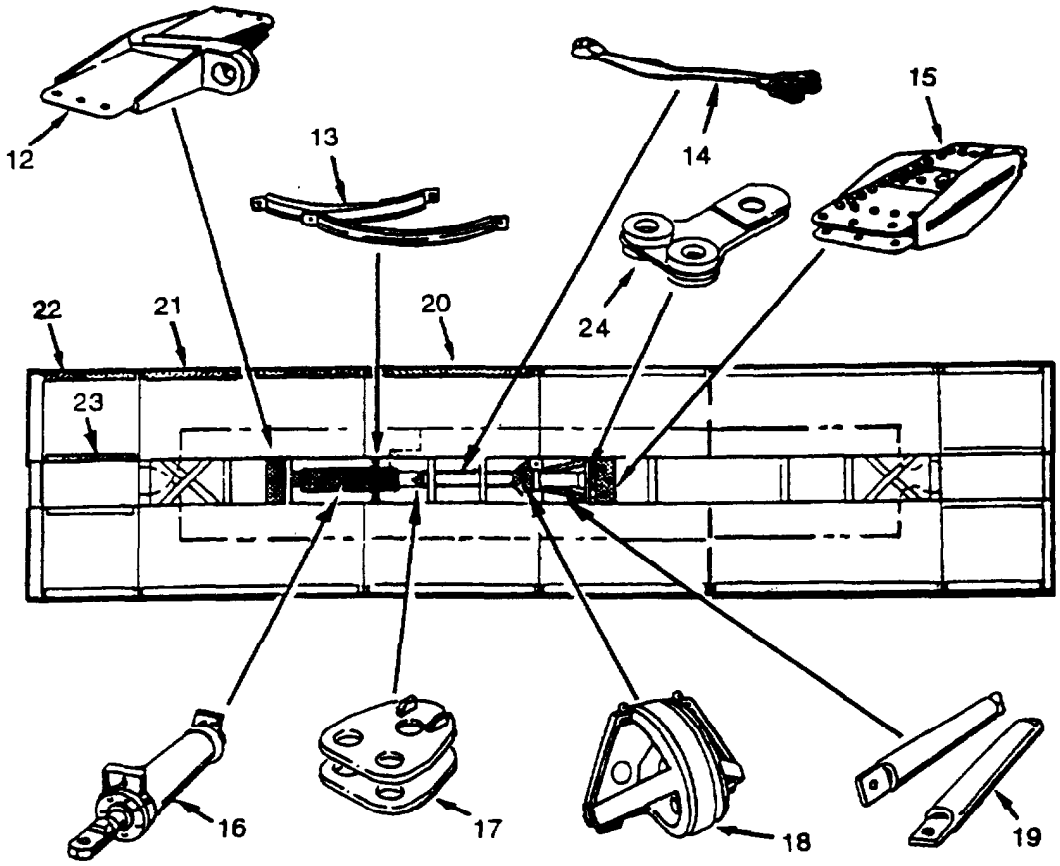

LEGEND:

12. Beam, Cylinder
13. Cylinder, Support
14. Cables
15. Beam, Cable
16. Cylinder, Scissor
17. Plate, Equalizer (Cylinder End)
18. Quadrant Assembly
19. Strut, Quadrant
20. Curbing (Center Section)
21. Curbing (End Section)
22. Curbing (Ramp Section)
23. Curbing Ramp Section, (Inside)
24. Plate, Equalizer (Cable Beam End)

FIGURE 1-6 Relationship of Major Components (MLC60) (Sheet 2 of 2).

1-7. LOCATION AND DESCRIPTION OF MAJOR COMPONENTS - CONT

Table 1-3. Major Components (MLC 70)

ITEM	QTY	NSN	ITEM NUMBER
Rod, Threaded (Tie)	2	5306-01-136-1186	8
Spacer, Tie Rod	2	5365-01-011-5038	9
Brace, Lateral	2	5420-00-542-3122	4
Section, Female	2	5420-01-419-9478	1
Section, Male	2	5420-01-420-1684	2
Brace, Forward Transverse	4	5420-01-419-9481	7
Brace, Rear Transverse	2	5420-01-420-1685	6
Brace, Rear Transverse	2	5420-00-542-3125	5
Curb, Ramp (inside) 8 ft 1 in. L	4	5420-00-542-3127	20
Curb, End 12 ft 10 1/2 in. L	4	5420-00-542-3128	19
Curb, Ramp 8 ft 6 3/4 in. L	4	5420-00-542-3129	21
Curb, Deck 9 ft 11 1/2 in. L (Center)	4	5420-00-542-3130	18
Quadrant Assembly	1	2590-01-431-4438	16
Plate, Equalizer	1	5420-00-542-3138	15
Strut, Quadrant	2	5420-00-542-3139	17
Cable, Scissoring (Left Lay)	1	5420-00-542-3140	12
Cable, Scissoring (Right Lay)	1	5420-00-542-3141	12
Beam, Cable	1	5420-00-542-3146	13
Plate, Equalizer	1	5420-00-542-3147	22
Beam, Cylinder	1	5420-00-542-3148	10
Diaphragm, Launching	2	5420-00-542-3149	3
Support, Cylinder	2	5420-00-542-3151	11
Cylinder, Actuating (Scissoring)	1	5420-00-542-3155	14
Pins (see Hardware, Table 1-2)			

Table 1-4 Connecting Hardware (MLC 70)

ITEM	QTY	NSN
Pin, Cylinder, Scissoring, 3 1/2 in. Dia x 9 in.	1	5420-00-542-3157
Pin, Equalizer Plate, 3 in. Dia x 6 1/2 in. L	2	5420-00-542-3137
Pin, Panel, Connecting W/Locking Retainer, 3 in. Dia. x 9 3/8 in. L.	4	5420-00-542-3136
Pin, Panel, Center Locking, W/Handle and Lubrication Fitting, 3 in. Dia x 9 7/8 in L.	2	5420-00-682-4517
Pin, Hinge, Quadrant W/Lubrication Fitting, 3 in. Dia x 15 1/8 in. L	2	5420-00-542-3131
Pin, Locking, Quadrant, 3/4 in. Dia x 6 1/2 in. L	4	5420-00-542-3133

1-7. LOCATION AND DESCRIPTION OF MAJOR COMPONENTS - CONT

Table 1-4 Connecting Hardware (MLC 70) - CONT

ITEM	QTY	NSN
Pin, Locking, Retainer, 1 in. Dia x 2 3/8 in. L	2	5420-00-542-3134
Pin, Retainer	2	5420-00-060-7030
Retainer, Cable, 14 in. L, 2 in. W, 1 1/2 in. H	1	5420-00-542-3135
Pin. Locking. Retainer. 1 in. Dia x 2 3/8 in. L	2	5420-00-542-3134

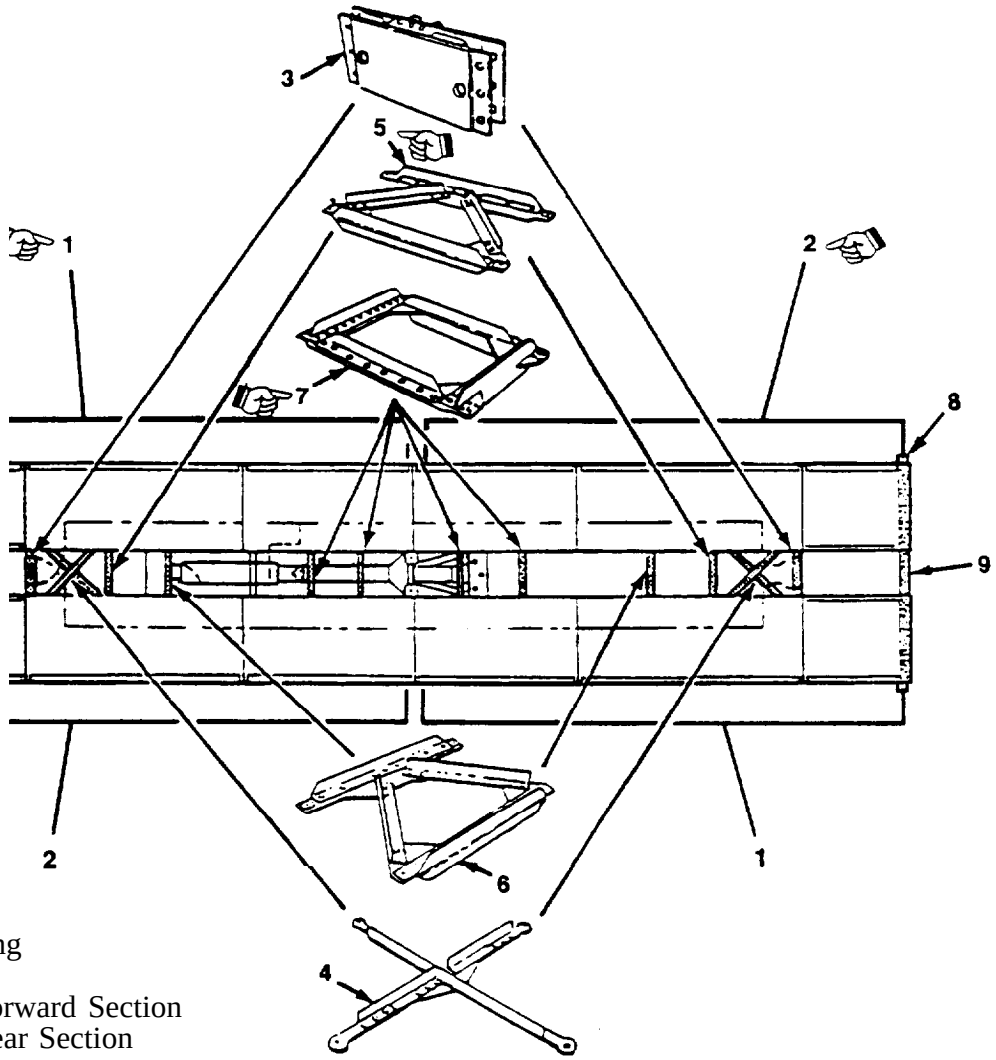

LEGEND:

1. Section, Female
2. Section, Male
3. Diaphragm, Launching
4. Brace, Lateral
5. Transverse Brace, Forward Section
6. Transverse Brace, Rear Section
7. Transverse Brace
8. Rod, Tie
9. Spacer

FIGURE 1-7. Relationship of Major Components (MLC 70) (Sheet 1 of 2).

1-7. LOCATION AND DESCRIPTION OF MAJOR COMPONENTS - CONT

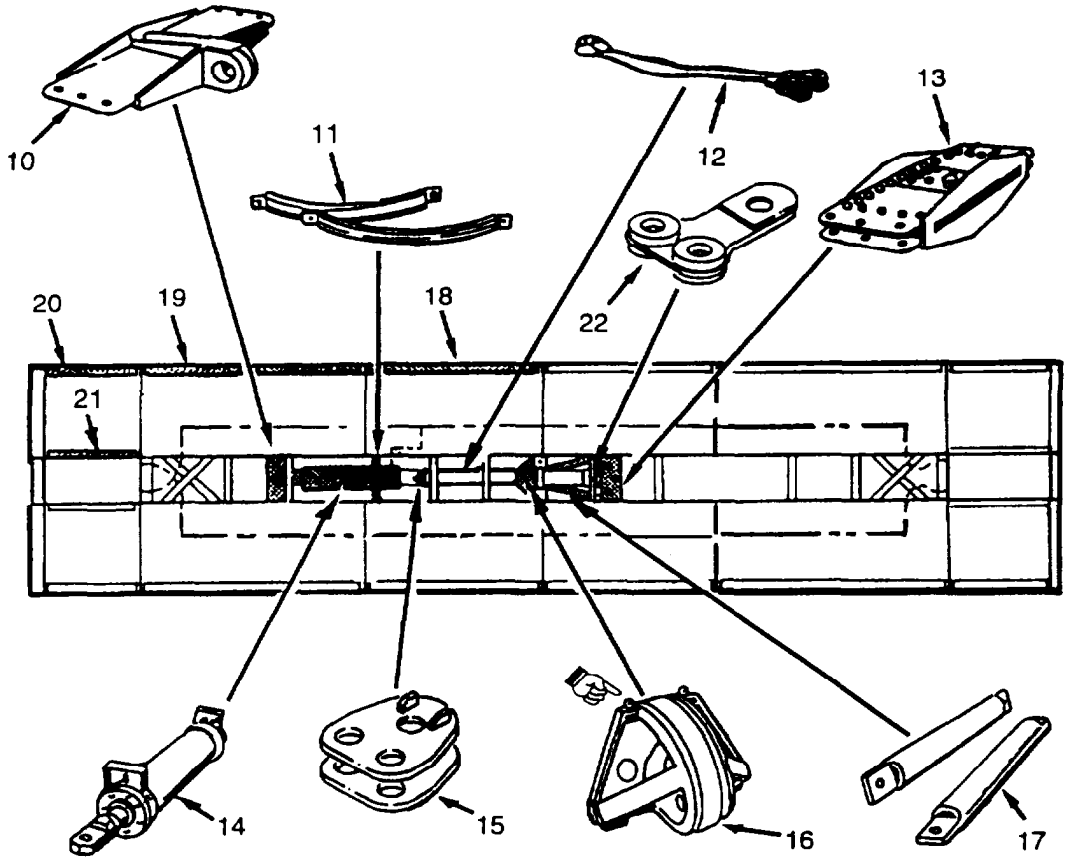

LEGEND:

10. Beam, Cylinder
11. Cylinder, Support
12. Cables
13. Beam, Cable
14. Cylinder, Scissor
15. Plate, Equalizer (Cylinder End)
16. Quadrant Assembly
17. Strut, Quadrant
18. Curbing (Center)
19. Curbing (End)
20. Curbing (Ramp)
21. Curbing (Ramp, Inside)
22. Plate, Equalizer (Cable Beam End)

FIGURE 1-7 Relationship of Major Components (MLC 70) (Sheet 2 of 2).

1-8. EQUIPMENT DATA.

The bridge has limitations. The operations of the bridge should be performed with the following data in mind.

a. AVLB Equipment Data.

1. MLC 60

Overall length	63 ft
Overall width	13 ft, 2 in.
Weight of bridge assembled	29,300 lbs
Weight of individual sections:	
Center sections	1830 lbs
Ramp sections	3825 lbs
Weight of bridge and launcher	63 tons
Height	12 ft, 9 in.
Height of bridge at highest point during launching	35 ft
Height of AVLB when mounted on carrier	12 ft, 9 in.
Maximum load carrying ability (under risk conditions)	(70 tons
Hydraulics	High pressure system, externally supplied
Shipping Cubage	25,800 cubic ft

2. MLC 70

Overall length	63 ft
Overall width	13 ft, 8 in.
Weight of bridge assembled..	30,000 lbs
Weight of individual sections:	
Male sections	5980 lbs
Female sections	6000 lbs
Weight of bridge and launcher	63 tons
Height.	12 ft, 9 in.
Height of bridge at highest point during launching	35 ft
Height of AVLB when mounted on carrier..	12 ft, 9 in.
Maximum load carrying ability (under risk conditions).	TBD
Hydraulics	High pressure system, externally supplied
Shipping Cubage	25,800 cubic ft

NOTE

There are two configurations of sections.

- MLC 60 supports M48 and M60 family of vehicles.
- MLC 70 supports M1 family of vehicles with no greater risk than the MLC 60 incurs when supporting a normal capacity of class 60.

1-8. EQUIPMENT DATA - CONT

b. Load and Use Limitations. The MLC 60 bridge can support up to Class 70 under "risk" conditions. This means that although the bridge can support a crossing weight of Class 70, it does so with the risk of failure if care is not taken. FIGURE 1-7 indicates the highest speed a vehicle should travel when crossing the bridge and also shows limitations for caution and risk crossings.

- Approach speed is no greater than maximum vehicle crossing speed.
- Three miles per hour (3 MPH) is maximum speed crossing under risk conditions.
- No turning, positioning, or jerking of vehicle allowed on the bridge.
- Align vehicle straight down the center line of bridge prior to crossing.
- No course corrections allowed on bridge. Course corrections create sideways stress that could structurally damage the bridge and cause a failure.
- No stops allowed on the bridge.
- No more than one vehicle allowed on bridge at one time.
- Calculate Military Load Class (MLC) for each crossing vehicle. Refer to TM 5-312 and FM 5-36 for instructions on how to calculate or figure MLC.
- All vehicles heavily laden with weapons, equipment, and/or tools shall cross under "risk" conditions. Accompanying troops on such vehicles shall unload and walk across the bridge, if mission permits (troops are not under fire).

c. Safety in Use. Structural and curb damage to the bridge has been attributed to speeds at which tanks are crossing the bridge. Structural damage also has been attributed to stopping, starting, and course direction adjustments made on the bridge. Any of these actions exert a serious increase of forces on the bridge. These forces can cause structural failures, warping, twisting, and component breaks. Bridges which will be used to support MLC 60 thru 68 are to be inspected by an engineer officer and marked as follows: Inspect bridge panels for structural damage, weld repairs, and center panel hinge wear. Center panels having hinges with less than 1 7/8 inches of material remaining between the outside of the hinge pin hole and the outside edge of the hinge must be replaced. Only the four hinges on the female center panel need to be measured. However, if any of the male hinges appear to be worn more than the corresponding female hinges, than both the female and male must be measured. Dismantling the bridge is not required to conduct these measurements. Any bridge panel showing signs of structural damage is to be repaired or replaced as necessary. Repair by welding is not authorized as it will weaken the panel. Bridges are to be marked with paint to identify a 50 ft span. This is to be done by measuring 25 ft in each direction from the center panel hinges and painting a vertical yellow stripe on both sides of the bridge at both ends. When the bridge is to be utilized for a crossing of vehicles with a MLC 60 thru 68, the operator must ensure that there is a solid foundation under the panels to at least the painted stripe on both sides of the bridge.

1-8. EQUIPMENT DATA - CONT

NORMAL CROSSING - total vehicle classification under 50 MLC are able to use 60 foot span.

- Minimum over hang with prepared abutments - 18 inches.
- Minimum over hang with unprepared abutments - 36 inches
- Maximum speed of vehicle on bridge is EIGHT (8) miles per hour.

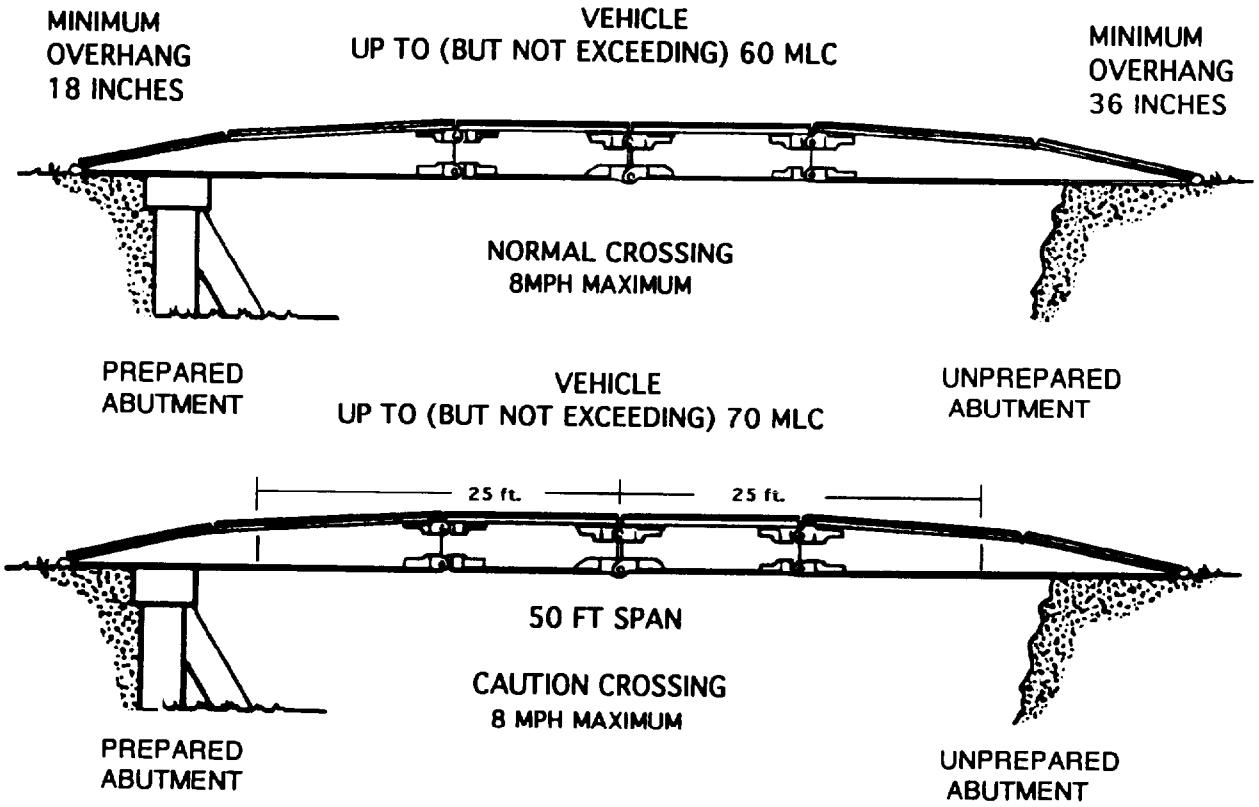

FIGURE 1-7. Maximum Vehicle Crossing Speeds and Weight Limits for MLC 60.

1-8. EQUIPMENT DATA - CONT

The following crossing restrictions are for combat vehicles exceeding a 60 ton vehicle weight and must be enforced for crossing safety and to increase bridge service life:

CAUTION CROSSING - total vehicle classification from 50 to 70 MLC for 50 foot gap

- Maximum speed of vehicle on bridge is EIGHT (8) miles per hour.
- Upper connecting pins (4 each) must be installed
- Approach the bridge at no greater than maximum crossing speed
- Vehicle must be centered on bridge.
- Vehicle operator should restrict steering adjustments to the minimum.
- No stopping, accelerating, or shifting gears while on the bridge.
- No more than one vehicle on bridge at one time.

WARNING

DO NOT cross the AVLB with a M1 series tank that has the Mine Clearing Blade installed. Doing so will result in damage to the bridge and could cause death or serious injury to personnel.

RISK CROSSING - for total vehicle classification over 60 but not exceeding 70 MLC for 60 foot gap
Risk crossings can be made in emergencies when excessive combat losses would otherwise result.

- Maximum speed of vehicle on bridge is THREE (3) miles per hour (MPH)
- Upper connecting pins (4 each) must be installed.
- Approach the bridge at no greater than maximum crossing speed.
- Vehicles must be centered on bridge.
- Vehicle should properly align down the center line of the bridge so steering adjustments are not required while on the bridge.
- No stopping, accelerating, or shifting gears while on the bridge.
- No more than one vehicle on bridge at one time.
- Gross weight on the bridge shall not exceed 70 MLC.
- A senior crewman must inspect the bridge for signs of structural failure after each risk crossing Damaged parts must be replaced or repaired before traffic can resume.

1-9. SAFETY, CARE AND HANDLING.

General safety precautions, care, and handling instructions are included in this paragraph.

a. Safety. Put safety first in all operations. Take care when working with the bridge to avoid injuries or damage to equipment. Read and follow all safety cautions and warnings. Do not try to perform an unsafe or questionable act. Follow procedures as written. Do not try to save time. These procedures were written with your safety in mind. Remove any unneeded material or equipment from the immediate working area. Keep all equipment in a good, usable condition. Check all lifting devices, chains, hooks, pins, cables, etc., prior to use. Do not use any equipment if the serviceability is in doubt. Replace any bad component. Wipe up all oil and hydraulic spills. Ensure the serviceability by doing the checks yourself.

b. Care. The bridge is well made and properly engineered. It requires care to make sure it will be ready for use when needed. Follow the directions in this Technical Manual (TM) to properly lubricate, inspect, repair, and use the bridge. With proper care, the bridge will be a valued asset to your unit,

c. Handling. Handling the bridge safely requires the use of proper procedures and equipment. This TM covers the use and handling of the bridge. Procedures and equipment required for the safe operation are called out when and where needed. Perform the procedures as written. Use only the equipment called out or its equivalent. Never use a lifting device, chain, cable, or hook, whose rated strength is not known. Maintenance of the handling equipment, launcher, crane, etc., is required to ensure safe operation.

Section III. PRINCIPLES OF OPERATION

1-10. DESCRIPTION OF OPERATION.

NOTE

There are two configurations of bridge sections
- MLC 60 supports M48 and M60 family of vehicles
- MLC 70 supports M1 family of vehicles

The operations surrounding the bridge and problems that may occur are found in Chapter 2. The different operations of the bridge are listed in the order of frequency they generally occur.

CHAPTER 2

OPERATING INSTRUCTIONS

Section I. DESCRIPTION AND USE OF OPERATOR'S CONTROLS AND INDICATORS

2-1. CONTROLS AND INDICATORS.

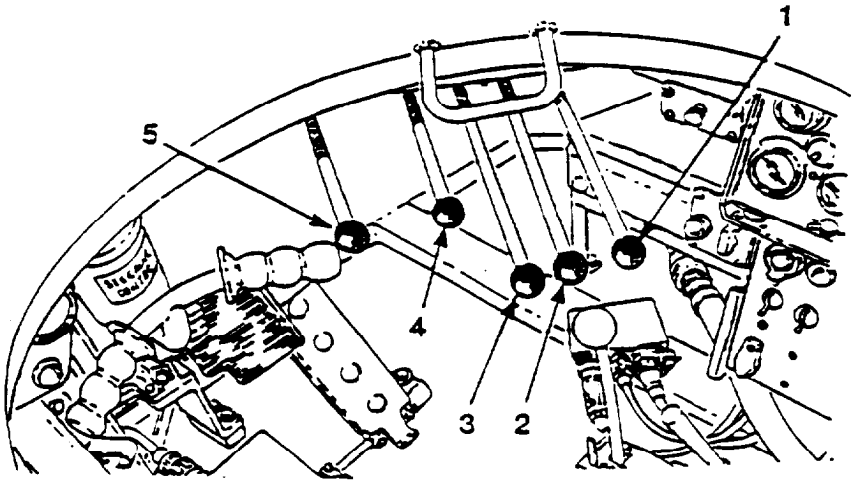

Table 2-1. Use of Controls and Indicators

KEY	CONTROL or INDICATOR	FUNCTION
1	OVERHEAD CYLINDER LEVER	LIFTING UP ON THIS LEVER RETRACTS PIN OF HOLDDOWN CYLINDER AND RAISES BRIDGE FROM BRIDGE SEAT. HOLDING DOWN ON THIS LEVER LOWERS BRIDGE TO BRIDGE SEAT AND EXTENDS HOLDDOWN CYLINDER PIN LOCKING TIEDOWN CHAINS.
2	TONGUE CYLINDER LEVER	LIFTING UP ON THIS LEVER LOWERS BRIDGE TO THE GROUND FROM VERTICAL POSITION. HOLDING DOWN ON THIS LEVER RAISES BRIDGE BACK TO VERTICAL POSITION. USED WITH SCISSOR BRIDGE CYLINDER.
3	SCISSOR CYLINDER LEVER	LIFTING UP ON THIS LEVER EXTENDS (UNFOLDS) BRIDGE DURING LAUNCH. HOLDING DOWN ON THIS LEVER RETRACTS (FOLDS) BRIDGE. USED WITH TONGUE CYLINDER.
4	LOCKING CYLINDER LEVER	LIFTING UP ON THIS LEVER RETRACTS LOCKING PLUGS. HOLDING DOWN EXTENDS LOCKING PLUGS.
5	EJECTION CYLINDER LEVER	LIFTING UP ON THIS LEVER WHILE LIFTING UP ON LEVER (KEY 4) PUSHES BRIDGE AWAY FROM TONGUE. HOLDING DOWN RETRACTS EXTENDED CYLINDER PINS.

2-1. CONTROLS AND INDICATORS - CONT

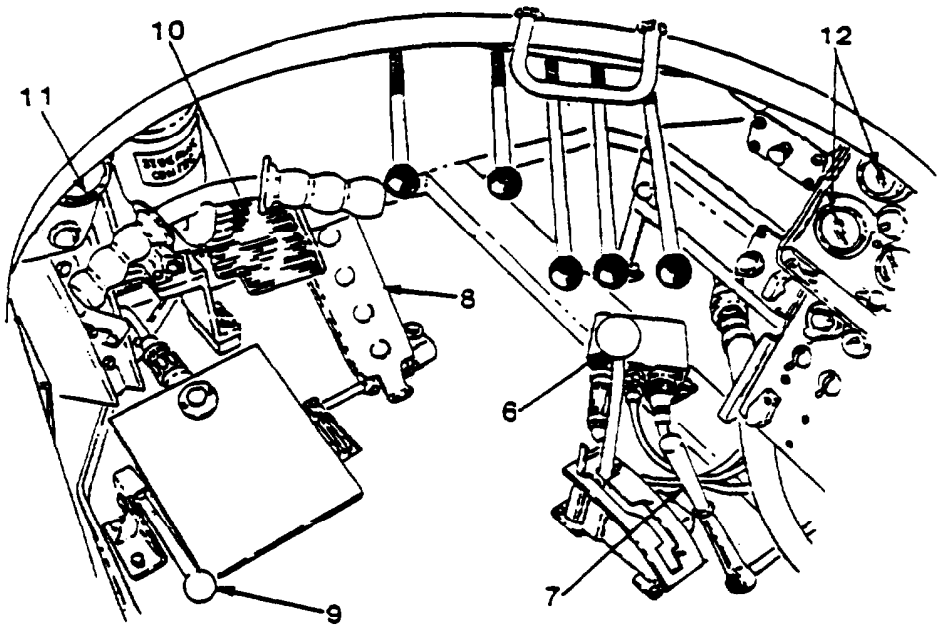

Table 2-1. Use of Controls and Indicators - CONT

KEY	CONTROL or INDICATOR	FUNCTION
6	TRANSMISSION SHIFT LEVER	SELECT THE GEAR RANGE AND NEUTRAL AND PARK TRANSMISSION POSITIONS.
7	HYDRAULIC CLUTCH PUMP LEVER	LIFTING Up ON THIS LEVER ENGAGES HYDRAULIC PUMP. PUSHING DOWN DISENGAGES HYDRAULIC PUMP.
8	ACCELERATOR PEDAL	PUSHING DOWN ON THIS PEDAL INCREASES ENGINE RPM. RELEASING PRESSURE DECREASES ENGINE RPM.
9	ACCELERATOR LOCKING LEVER	USED TO LOCK THROTTLE PEDAL AT SET RPM.
10	BRAKE PEDAL	PUSHING DOWN ON THIS PEDAL WILL CAUSE VEHICLE TO SLOW OR STOP. REDUCING PRESSURE WILL REDUCE BRAKING EFFECT ON VEHICLE.
11	RPM GAUGE	INDICATES RPM OF ENGINE.
12	ENGINE GAUGES	INDICATES VARIOUS PRESSURES AND CONDITIONS OF DRIVE TRAIN AND BRIDGE COMPONENTS

Section II. PREVENTIVE MAINTENANCE CHECKS AND SERVICES (PMCS)

2-2. GENERAL.

a. Introduction. Your Preventive Maintenance Checks and Services (PMCS), Table 2-2, lists the inspection and care of your equipment required to keep it in good operating condition. FIGURE 2-1 (AVLB 60), FIGURE 2-2 (AVLB 70), and FIGURE 2-3 (Details) show the layout of each bridge with its unique terminology used in Table 2-2 and is the walk-around inspection pattern to be used with your PMCS. Hard use, severe weather, and rough field conditions will result in increased levels of maintenance and more frequent inspections will be required.

b. PMCS Columnar Entries. The five columns used to direct PMCS are:

(1) Item Number Column. The specific item or items requiring PMCS are identified in this column.

(2) Interval Column. The interval column of your PMCS table tells you when to do a certain check or service. The service intervals as follows:

Before you operate. Always keep in mind the CAUTIONS and WARNINGS. Perform your "Before" PMCS.

While you operate. Always keep in mind the CAUTIONS and WARNINGS. Perform your "During" PMCS.

After you operate. Be sure to perform your "After" PMCS

Weekly. Always perform your "Weekly" PMCS.

Monthly. Always perform your "Monthly" PMCS

(3) Item To Check/Service Column. This column will identity the item by its common name and direct what action to take.

(4) Procedure Column. This column informs or directs the inspection, service, or check. If your equipment fails to operate, troubleshoot with proper equipment using troubleshooting procedures in this TM as your guide. Report any deficiencies using the proper forms. See TM 38-750.

(5) Not Mission Capable if Column. This column gives the criteria for determining mission capability. Refer to paragraph 2-2c and 2-2d for classification and definition of leaks and corrosion.

NOTE

Any item or situation in question which may cause an unsafe situation that is not covered by the PMCS shall be reported to the unit commander before the bridge is used. The unit commander will determine the Not Mission Capable (NMC) status for the bridge for those items or situations not covered by the PMCS list.

Table 2-2. Preventive Maintenance Checks and Services (PMCS)

Item No.	Interval (B, D, A, W, M)	Location Item to Check/Service	Procedure	Not Mission Capable if:
1	BEFORE	Tie Rod Assemblies	Check for missing, loose, or damaged tie rods, tie rod spacer, tie rod nuts/ washers, and housing. Replace any missing or damaged parts (tie rod is a non-structural member).	
2	BEFORE	Deck Extrusions/ Curbing	Inspect for missing, cracked, deformed, or split decking/curbing. Replace as necessary (decking and curbing are non-structural members).	One or more deck plates in a row missing for wheeled vehicles; three or more in a row for tracked vehicles.
3	BEFORE	Hydraulic Fluid Leaks	Inspect for any hydraulic fluid leaks (hydraulic components are non-structural members)	Class III leak exists.
4***	BEFORE	Rivets, either pin-rivet or hot-rivet - Button Head (BH) or Countersunk (CSK)	Inspect for missing, loose, broken heads and collars (in the case of pin-rivets), also any evidence of corrosion (white dust or powder around the hot rivet head). Also check the ground where a bridge has been stored for any rivet heads that may have fallen off due to corrosion. Report this immediately through channels. (Rivets/pin-rivets are considered secondary structural members except where they exist in the hinge, connector areas, spliced areas, or at locations along the bottom cord where they connect cross bracing. Rivets in these areas are considered of primary concern.	One or more CSK vertical rivets missing or loose in the hinge, connector area, or spliced area in ramp. Two or more BH horizontal rivets in top or bottom and any rivet heads that had fallen off from either the hinge connector, or spliced area of AVLB.

Table 2-2. Preventive Maintenance Checks and Services (PMCS) - CONT

Item No.	Interval (B, D, A, W, M)	Location Item to Check/Service	Procedure	Not Mission Capable if:
5	BEFORE	Attaching hardware, nuts/bolts washer used to secure the braces, hold the treadways and hydraulic components together	Inspect for missing, loose, or broken items (include any retainer clips).	One or more attaching items missing from any brace or cross member that interconnect the two treadways
6	BEFORE	Top center connector pins (AVLB 60 & 70)	Check to ensure that these pins are available, but not necessarily installed (Bridges are designed to be crossed without these pins in place).	
7	BEFORE	Top & bottom (end to center panels) connector pins (AVLB 60)	Inspect for the presence of pins and retainer clips.	Any one pin or retainer clip missing.
8**	BEFORE	Center hinges (bottom chord) with hinge pin & retainer clip	Inspect for completeness and any cracking or damage of the hinge.	Any one hinge missing, cracked (regardless of length), damaged. Any missing hinge pins/retainer clips.
9**	BEFORE	Main alum. angles along both top & bottom chords	Inspect leading edges of angle flanges for any cracks and gouging or nicks.	Any one angle that shows a crack (regardless of length) or has a deep (1/4 in. or greater) gouge or nick.

Table 2-2. Preventive Maintenance Checks and Services (PMCS) - CONT

Item No.	Interval (B, D, A, W,M)	Location Item to Check/Service	Procedure	Not Mission Capable if:
10**	BEFORE	Connector area along the bottom chord (connectors for AVLB 60 splice bars & spacers for AVLB 70)	Inspect for missing, cracked or broken connectors/splice bars & spacers.	Any missing cracked (regardless of length) or broken items.
11**	BEFORE	Press fit pins along the top chord (AVLB 70)	Inspect for missing, loose, cracked, or broken press fit pins.	Any missing, cracked (regardless of length) or broken press fit pins.
12**	BEFORE	Splice doubler angles in bottom chord	Inspect for missing, cracked, broken, or damaged angles. If the angles in the AVLB 60 have the 45° notch along the outer leading edge (both sides of each web girder plate), cracks will typically initiate at the notch.	Any missing or broken angles. Any two angles on same girder that are cracked. Any one angle that has a crack more than one inch in length or extends through a rivet hole.
13**	BEFORE	Splice plate along bottom of each girder	Inspect for missing, bent, warped, or tom plates.	Any missing. cracked, or tom plates.
14**	BEFORE	Main alum. angle exten-sions (behind the web of the splice doubler angles)	Inspect for any cracks along the top leading edge of the aluminum angle extension.	Any two angle extensions cracked on same girder.

Table 2-2. Preventive Maintenance Checks and Services (PMCS) - CONT

Item No.	Interval (B, D, A, M, W)	Location Item to Check/Service	Procedure	Not Mission Capable if:
15***	BEFORE	Cross bracing under the treadways of center/end panels (AVLB 60) or bridge selections (AVLB 70)	Check to make sure that all angles are the structural type i.e., there is a curved radius of material along the apex of the angle. Inspect for any cracks or separations especially along the vertical members.	Two or more angles missing, not of structural design, or are broken due to cracks forming along the apex or through rivet holes in the same cross brace (if cracks exist in these members, the cracks should be monitored for propagation), (if cracks exist and the panel leans or sags, stop operation and replace the panel).
16**	BEFORE	Launching diaphragm	Inspect for any cracks, damage, bent or missing item.	Missing, cracked, or bent (if cracked or bent, do not launch or retrieve bridge)
17**	BEFORE	Hose assem-blies and quick disconnects	Inspect for cracked or split hoses and any missing hoses or quick-disconnects, plus attaching hardware. Check to see that quick disconnects function properly and no “O” rings (seals) are exposed.	Any class III leaks.
18***	BEFORE	Hydraulic piping/fittings/ connections	Inspect for missing, cracked, leaking, bent, or damaged items.	Any class III leaks

Table 2-2. Preventive Maintenance Checks and Services (PMCS) - CONT

Item No.	Interval (B, D, A, W, M)	Location Item to Check/Service	Procedure	Not Mission Capable if:
19**	BEFORE	Cylinder beam and cable beam	Inspect for missing, cracked, or broken beams and bolts.	Any missing, cracked, or broken beams and bolts.
20***	BEFORE	Scissoring cylinder & cylinder seat brackets	Inspect for missing, cracked, bent, or damaged items.	Missing or cracked/damaged cylinder, or any class III leaks.
21***	BEFORE	Scissoring/ launching cables and equalizer plates and pins	Inspect for any missing items, frayed or broken cables, and cracked, damaged or bent plates/pins. Ensure correct assembly of cables. Also ensure that cables are mounted correctly around quadrant.	Any missing, frayed, or broken items.
22**	BEFORE	quadrant and quadrant struts	Inspect for missing, cracked, or broken items.	Any missing, cracked, or broken items.
23	BEFORE	Cross pin socket on the inboard side of the ramps (four places two at each end of bridge)	Inspect for excessive wear of socket and pin. Also check for any obstruction that may prevent the mating of the cross pin to the cross pin socket.	Cross pin socket is sufficiently worn (enlarged) to prevent a proper seating. (If there is a problem with the seating, the bridge should not be retrieved or launched.
24***	BEFORE	Lateral cross braces (two places, one at each end of bridge)	Inspect for missing, cracked, bent, or broken braces.	Any missing or broken brace.

Table 2-2. Preventive Maintenance Checks and Services (PMCS) - CONT

Item No.	Interval (B, D, A, W, W)	Location Item to Check/Service	Procedure	Not Mission Capable if:
25***	BEFORE	Transverse braces between center and end panels (AVLB 60), or between sections (AVLB 70)	Inspect for missing, cracked, bent, or broken braces.	Any missing or broken brace.
26**	BEFORE	Webb girder plate	Inspect for any holes or tears, cracking or damage.	Any holes greater than approximately three inches in diameter, or tears of length greater than six inches in the web girder plate. Any, cracking thru the entire length or height of web girder plate.
27	DURING	Hydraulic fluid leaks	Check for any leakage of fluid.	Any class III leaks.
28**	DURING	Noise such as loud snapping or popping when vehicles are crossing or when bridge is being launched or retrieved	Check bottom main angles, hinges, top and bottom connector areas, splice joint areas, and web girder plate for any cracks, or breaks. (Primary structural members or areas)	Any, cracked (regardless of length) or broken items. If cracks are found in any other areas (secondary structural members), note and monitor.

Table 2-2. Preventive Maintenance Checks and Services (PMCS) - CONT

Item No.	Interval (B, D, A, W, M)	Location Item to Check/Service	Procedure	Not Mission Capable if:
29*****	DURING	With bridge positioned over the gap, look for any unusual dissemetry, i.e. sagging or leaning	Check for cracked or broken parts in the vicinity of the sag or lean. (Be careful not to get under the bridge in case it falls. Use props or crane/forklift/wrecker, if possible, to support the bridge.)	Any cracked or broken primary structural members or areas. (If cracks in secondary structural members, monitor for propagation. Only deadline bridge if following conditions apply: see note *** at end of this table.)
30	DURING	Deck plating/ curbing	Check for wear and tear, warping or bending of these items. Note and replace or repair as necessary.	
31	DURING	Attaching hardware (nuts and bolts)	Check for missing or loose items. Replace or tighten as necessary.	
32	DURING	Mating the launcher's tongue pintles to the launch-ing diaphragm and mating of the launcher's cross pin into the sockets	Check to ensure smooth fitting of the pintles into the holes on the diaphragm, and the cross pins into the cross pin sockets on the inboard ramp ends of the bridge.	
33	DURING	Bridge launching/ retrieval	Check to ensure that the bridge functions smoothly and that it fully lays out and retracts without any binding at the hinges or connector areas.	

Table 2-2. Preventive Maintenance Checks and Services (PMCS) - CONT

Item No.	Interval (B, D, A, W, M)	Location Item to Check/Service	Procedure	Not Mission Capable if:
34	DURING	Transport of bridge on launcher (travel mode)	During transport check for lateral (horizontal) motion of the bridge (top half sliding over bottom half while bridge rests in its travel lock seats) (this motion is most likely to be caused while traveling cross country).	Any excessive motion, e.g., 2-3 inches of slide in either direction (this will cause undue stress on the center hinges) (if experienced, tie or clamp bridge ends together).
35	DURING	Pivotal markers located along longitudinal centerline of the bridge (for AVLB 70 only)	Check to ensure that they are free to rotate and that they remain up-right when the bridge is laid over the gap. Keep free of mud, snow, and ice. Repair or replace bent or damaged markers.	Both markers missing or damaged beyond repair.
36	DURING	Painted circle (AVLB 70) painted on outsides of bridge panels/ sections	Check to see that they are visible and readable. Replace by repainting, as necessary.	All side markings missing or unreadable.
37	DURING	Obstructions on treadway of bridge	Check for accumulation of mud, snow, or ice. Keep bridge cleared off for safe travel.	Any unsafe condition that cannot be immediately corrected.
38	DURING	Vehicle crossing	Vehicles should slow down to a near stop when entering the bridge, then move across bridge, one at a time, at safe, steady speeds, not to exceed 8 MPH. Avoid any “stop braking on bridge”.	Any unsafe act that cannot be immediately corrected.

Table 2-2. Preventive Maintenance Checks and Services (PMCS) - CONT

Item No.	Interval (B, D, A, W, M)	Location Item to Check/Service	Procedure	Not Mission Capable if:
39	DURING	Complete bridge	Check for any binding of parts, namely the center hinges when the bridge is retrieved (scissored) onto the launcher.	Bridge does not fully close into its travel position on the launcher, or if the bridge does not lock into its folded travel position.
40	AFTER	Hydraulic piping/fittings/ connections	Inspect for missing, leaking, bent, or damaged items.	Any class III leaks.
41	AFTER	Hydraulic fluid leaks	Inspect for any leaks at hoses, piping, fittings, quick disconnects, and bridge cylinder.	Any class III leaks.
42	AFTER	Cross bracing under the treadways	Check the cross brace angles for correct type, i.e., American Standard or structural type (having a curved radius of material along the apex of the angle). Inspect for any cracks or separation	Two or more angles missing, not of structural design, or are broken. If cracks exist in these members, the cracks, regardless of length, should be monitored (if panel or section leans or sags, stop operation and replace panel or section).
43	AFTER	Deck plating	Inspect for any unusual wear, cracking, or damage.	One or more missing for wheeled vehicles; three or more missing for tracked vehicles.

Table 2-2. Preventive Maintenance Checks and Services (PMCS) - CONT

Item No.	Interval (B, D, A, W, M)	Location Item to Check/Service	Procedure	Not Mission Capable if:
44**	AFTER	Center and end panels for AVLB 60; Sections for AVLB 70	Inspect for any unusual sagging, leaning, or bending.	Any cracks or breaks in primary structural members, e.g., hinges, main angles, connector areas, spliced areas and web girder plates.
45**	AFTER	Complete bridge	Inspect for an unusual sagging, leaning, or bending.	Same as for item 44 above.
46	AFTER	Attaching hardware	Check for any missing attaching hardware and rivets. Replace as necessary. As a field expedient, use 3/4” steel bolts/nut/lock washers to replace missing or broken rivets/pin-rivets.	
47	AFTER	Piston rod of the bridge scissoring cylinder	Check for excessive fluid leakage along the piston rod.	Fluid loss exceeds one pint per hour of operation.

Table 2-2. Preventive Maintenance Checks and Services (PMCS) - CONT

Item No.	Interval (B, D, A, W, M)	Location Item to Check/Service	Procedure	Not Mission Capable if:
48	WEEKLY	Complete bridge	Check for any damage or missing parts	Any missing/ broken panels or sections or cracked primary structural members e.g., hinges, main angles, connector areas, spliced areas, & web girder plates. Any cracks found in secondary structural members are not considered a NMC condition, but should be monitored for any propagation.
49	MONTHLY	Complete bridge	Inspect for evidence of corrosion along primary structural members to include the rivets. Look for white or gray dusting or powder buildup. Look for missing rivet heads. If rivet heads are missing or found laying on the ground beside a bridge, tap on some more rivet heads in that area of the bridge to see if they fall off.	Stage III or IV corrosion conditions; one or more rivet heads or collars missing in area of hinge, connector, or splice joint; and two or more rivet heads missing in a row along either top or bottom chords.

NOTES: * If the leading edge of the main angle is damaged by a gouge or nick, do not try to smooth the rough places out by filing the area against the grain of the metal, e.g., filing 90° to the flange of the angle. This will only cause stress risers which will result in a cracked or broken main angle when placed under the load of tanks.

** A crack of any length or width which exists in a primary structural member, e.g., hinge, main angle, connector, splice bar, splice doubler angle, splice plate, web girder plate, quadrant, launching diaphragm, or the cable and cylinder beams, is considered a serious condition which warrants the immediate "deadlining" of the end item (bridge) until the item is repaired or replaced. Until then the bridge should be carried an NMC.

*** Cracks of a less serious nature are those found in secondary members, namely the angular and plate members of cross-bracing located both underneath the treadways and the transverse and lateral braces located between the treadways. If small cracks (1-2 inches long) are found in a secondary member, such as cross bracing, they are considered minor but should be monitored for further propagation. A bridge with minor cracks in secondary members should only be "deadlined" if any of the following conditions apply: 1) Cracks propagate through the two adjoining rivets holes in either the top or bottom of the two vertical angle members of the cross bracing; 2) Cracks propagate eight inches in either of the two vertical angle members starting from either the top or bottom of the angle; or 3) Cracks propagate completely through either of the two pieces of angle that make up the cross bracing

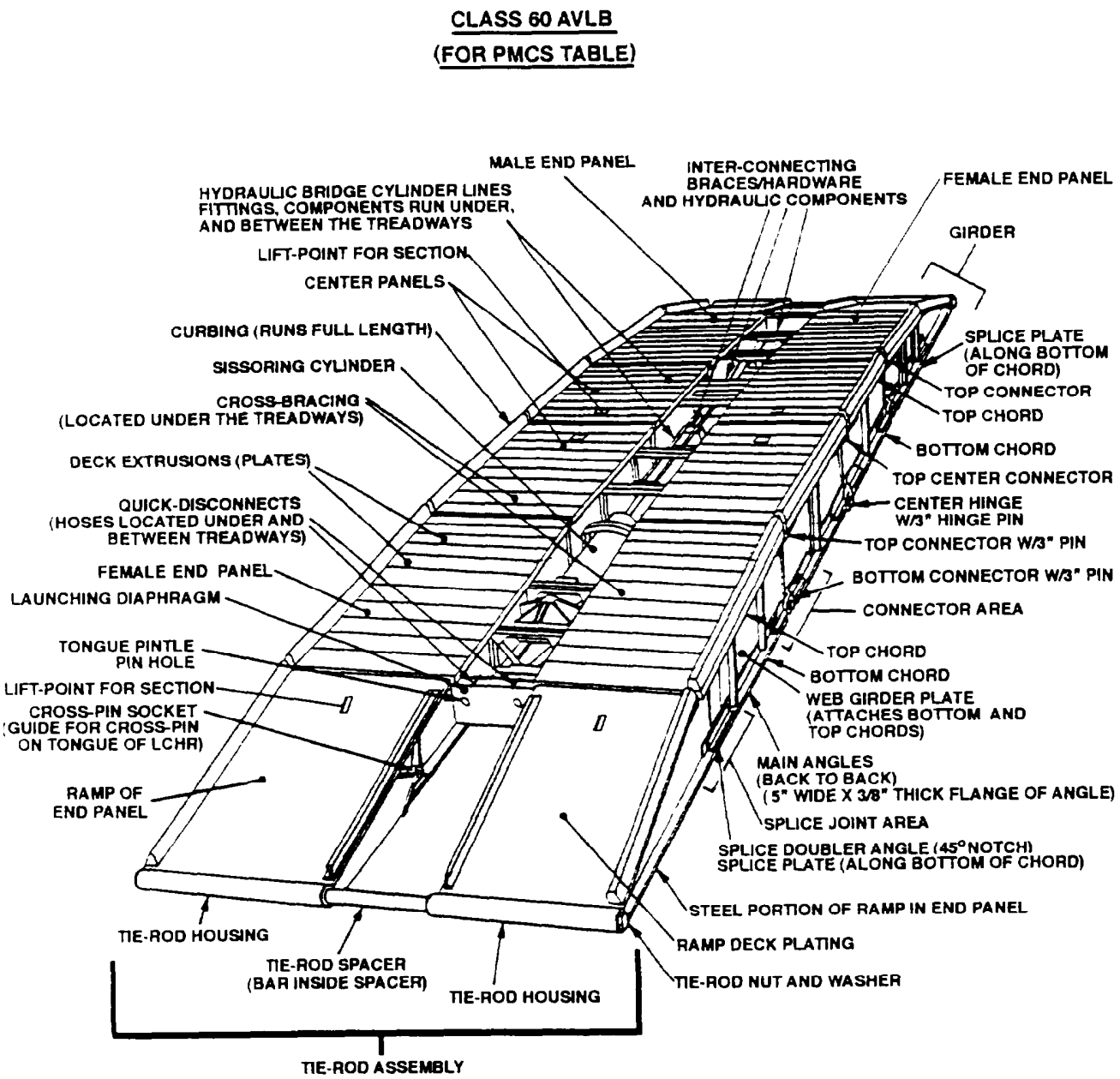

FIGURE 2-1 Nomenclature of Structural Components (MLC 60)

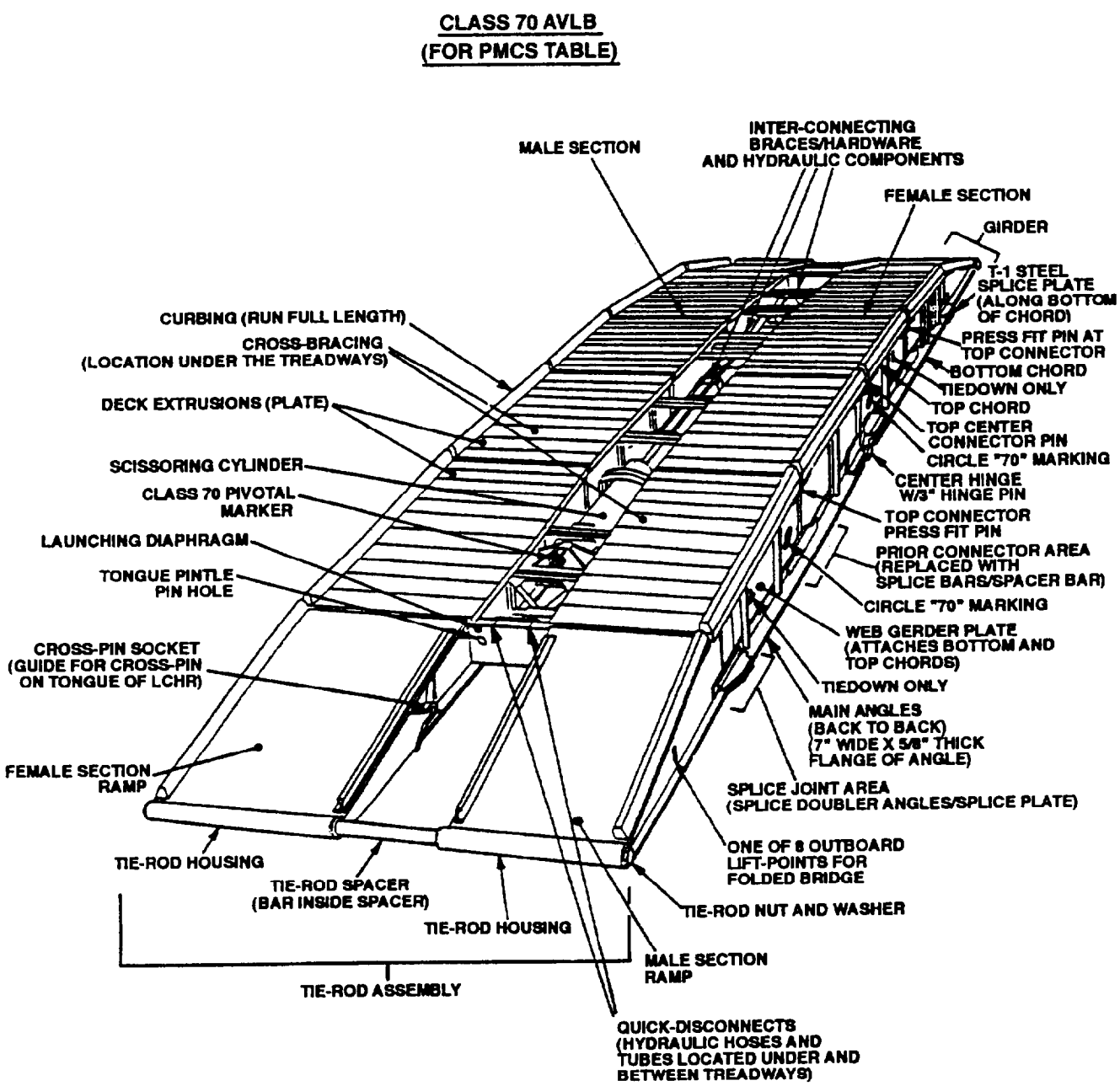

FIGURE 2-2 Nomenclature of Structural Components (MLC 70).

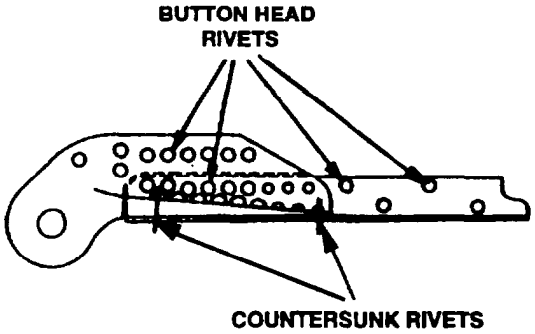

RIVET HEADS

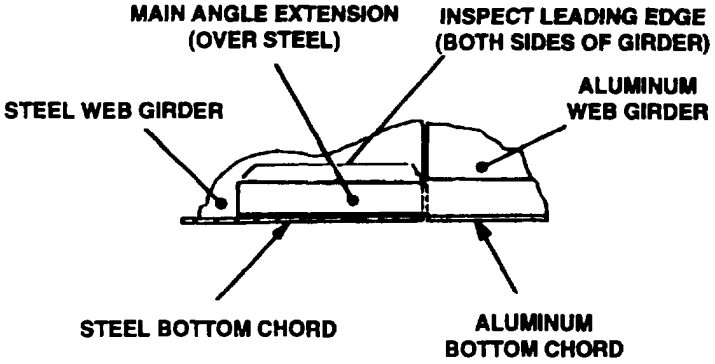

MAIN ANGLE EXTENSION
IN SPLICE AREA

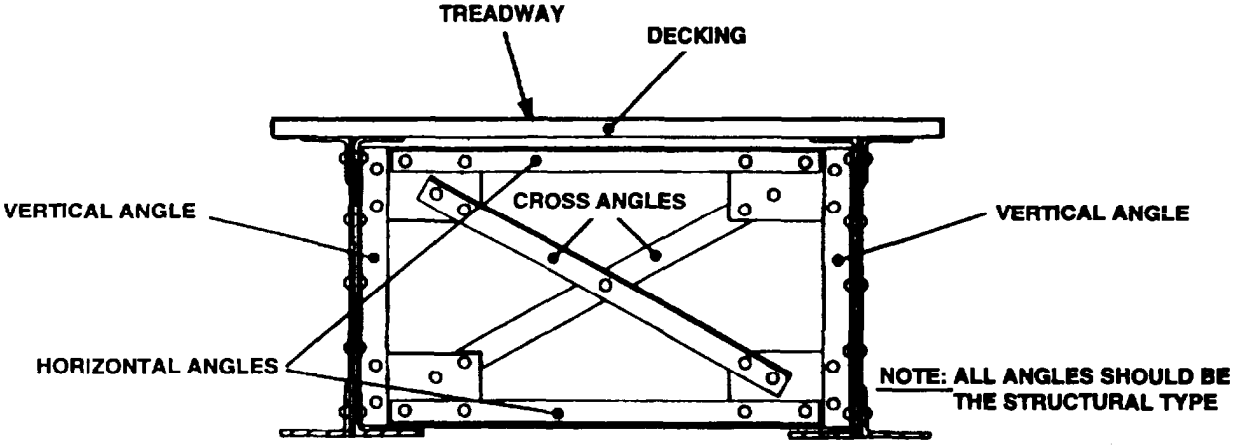

CROSS BRACING UNDER TREADWAY

FIGURE 2-3 Details.

2-2. GENERAL - CONT

c. Classifications and Definitions of Leaks for Operator/Crew PMCS:

CLASS I: Seepage of fluid (as indicated by wetness or discoloration) not great enough to form drops.

CLASS II: Leakage of fluid great enough to form drops but not enough to cause drops to drip from item being checked or inspected.

Equipment operation is allowable with minor leakage (Class I or II). Consider the fluid capacity in the system being checked or inspected. When in doubt, notify your supervisor.

When operating with a Class I or II leak, continue to check fluid levels as required in your PMCS.

CLASS III: Leakage of fluid great enough to form drops that fall from the item being checked or inspected.

Class III leaks shall be reported to your supervisor or organizational maintenance

d. Classifications and Definitions of Stage I, II, III, and IV Corrosion.

STAGE I CORROSION: Discoloration or staining. This stage of corrosion appears as a thinly gray, black, or reddish film on ferrous metals; as a white or gray film on aluminum, magnesium, zinc, and their alloys; and in varied colors (green, blue-green, brown, or black) on copper and copper alloys. This is the initial stage of corrosion; it does not extend beyond the surface of the metal and is easily removable.

STAGE II CORROSION: Etching. When rust or corrosion is removed, the surface of the metal is roughened, but no holes in the surface are distinguishable.

STAGE III CORROSION: Pitting. With this type of corrosion, holes in the surface of the metal are visible to the naked eye after corrosive coating is removed from the metal.

Material showing signs of Stage III Corrosion is generally unacceptable, but may be upgraded to Stage II or fully repaired using approved procedures for repair of corroded material. Refer to MIL-C-11080, Corrosion Resistant Coating.

STAGE IV CORROSION: Scales, pitting, and powdering. Corrosion in this stage has progressed to the point where fit, wear, function, or life of the part has been affected. Powdery or scaly conditions accompanied by deep pitting and/or irregular flaking of metal is encountered in this stage of corrosion.

Material containing Stage IV Corrosion is generally unacceptable, except in the case of castings or heavy plate. This material is acceptable after corrosion removal and repair if the function is not affected and surface roughness requirements are met.

Section III. OPERATIONS UNDER USUAL CONDITIONS

2-3. ASSEMBLY AND PREPARATION FOR USE OF MLC 60.

The bridge may be received assembled, partially assembled, or in sections. Standby modes are addressed in Chapter 5.

In case complete assembly is required (bridge was received disassembled in 8 sections), one method is to assemble the bridge by sections starting with the near-shore end. This means joining the near-shore ramp sections together with the diaphragm, braces, and cylinder beam. Pin the near-shore center sections to the completed end section, add the center section braces, install the scissor cylinder, and connect the hydraulics. Then, the far-shore center sections will be pinned to the near-shore center sections at the hinge. The far-shore center section braces will be installed. The far-shore end section is connected to the far-shore center sections to complete the bridge. This method of assembly allows the lifting device to work with small sections of bridge, and will be described in detail in paragraph 2-3c. Refer to paragraph 2-3d for assembly of a bridge separated at center hinges.

a. Instructions for Using Sling. The sling, multiple leg is made up of two lengths of chain attached on one end to one master link. On the opposite ends of the two chains are two hooks used to lift the ramps and center sections of the bridge. Refer to page 2-12.

WARNING

Deck extrusions may be slippery You could fall. Take care when walking on deck. The lifting sling could strike you. Maintain eye contact with lifting sling at all times.

(1) Connect the master link (1) of the sling (2) to the lifting device being used.

(2) Insert hook end (3) of sling through the deck extrusions (4) at the lifting brackets (5) located on ramp section (6) or center section (7). Ensure hook is securely connected.

(3) Repeat steps (1) and (2) for opposite length of chain and hook (3) at second lifting bracket (5).

WARNING

Keep hands and feet clear of sections when attempting to position. The sections are heavy and can cause injury to personnel if care is not used.

(4) Using lifting device, lift ramp section (6) or center section (7) and place where needed.

(5) Reduce strain on lifting device, disconnect master link (1) and two hooks (3) from two lifting brackets (5).

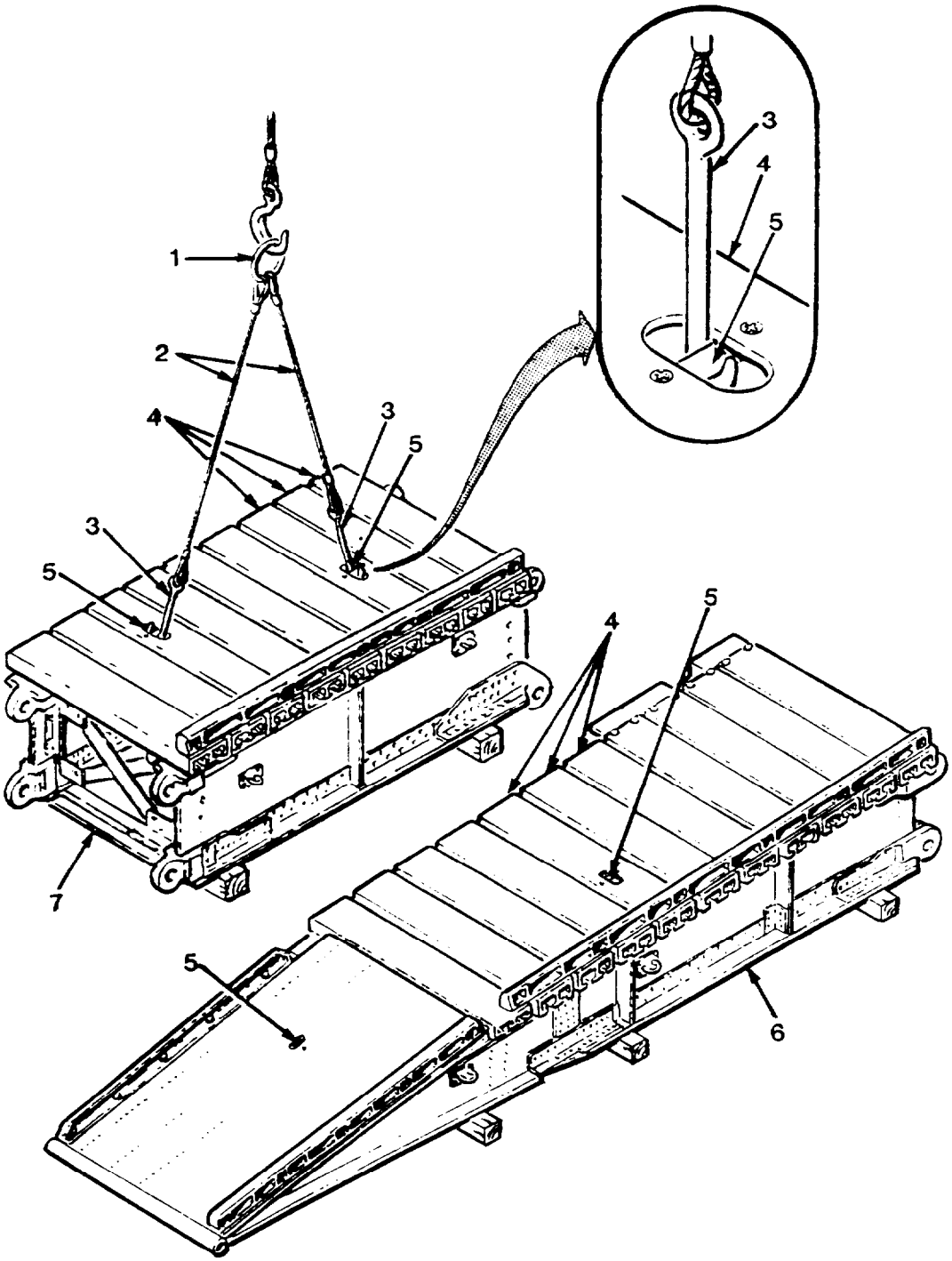
1
2
3
4
5
3
5
3
4
5
5
7
6

2-3. ASSEMBLY AND PREPARATION FOR USE OF MLC 60 - CONT

b. Preparation for Assembly. Refer to subparagraph (1) below if complete assembly of the bridge is required. Refer to subparagraph (2) if assembling a bridge separated at center hinges.

NOTE

The bridge may be assembled from either end. The following procedures are for assembling the near-shore end first.

(1) Preparation for Complete Assembly

(a) Locate an assembly site large enough for transporting vehicles and the lifting device. Allow enough room to unload and position the bridge components without additional shifting. The lifting device should be setup toward the middle of the bridge assembly site After a transporting vehicle has been unloaded, remove it from the assembly area to give more room.

(b) Place six pieces of cribbing (1) on the ground as shown

(c) Place a female ramp section on the left pair of crib timbers and a male ramp section on the right pair as shown.

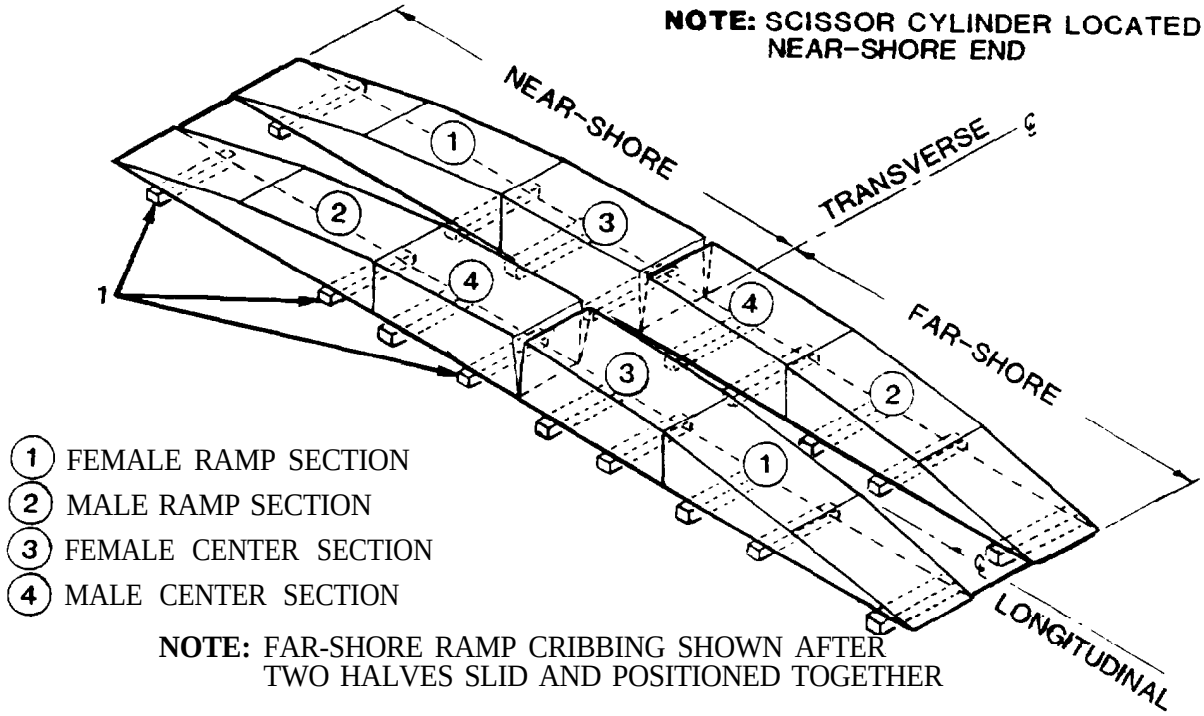

NOTE: FAR-SHORE RAMP CRIBBING SHOWN AFTER TWO HALVES SLID AND POSITIONED TOGETHER

2-3. ASSEMBLY AND PREPARATION FOR USE OF MLC 60 - CONT

(2) Preparation for Assembly of Bridge Separated at Center Hinges. Refer to page 2-34.

c. Assembly of the Bridge Separated into Eight Sections.

EQUIPMENT CONDITIONS:	Bridge separated into eight sections
TOOLS/EQUIPMENT:	General Mechanic's Tool Box, SC 5180-90-N26 Sledge Hammers (8-10 lb) (two required) Pry Bars (5-6 ft) (three required) Wrench, Adjustable, (item 3, Appendix B) (two required) Lifting Device, 15,000 lb Minimum Lift Capacity Sling, Multiple Leg
SUPPLIES:	Cribbing, 4 x 4 x 6 ft
PERSONNEL:	Ten

NOTE

When possible, assemble the bridge on a hard surface, within a unit compound, on an old road bed, etc.

(1) Installation of Holder Bracket (Near-Shore and Far-Shore).

(a) Install holder bracket (1) on diaphragm (2). Align with holes on either side of top of diaphragm. Place flat washer (3) on bolt (4) and install through bracket (1). Install lock washer (5) and nut (6) on bolt (4). Tighten nut/boltassembly. Repeat for remaining bolt (4).

(b) Repeat step (a) for remaining holder bracket (1) on diaphragm (2).

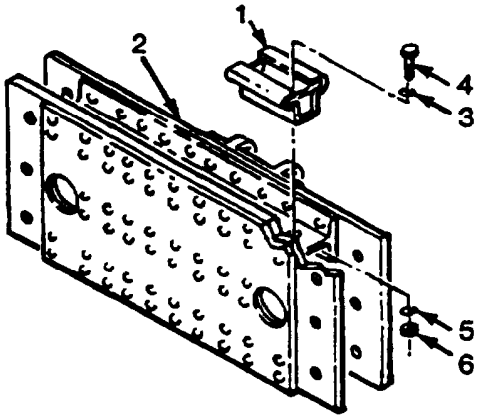

c. Assembly of the Bridge Separated into Eight Sections - CONT

(2) Installation of Near Shore Diaphragm.

(a) Using three bolts (1). attach one end of diaphragm (2) (pintle hole facing toward ramp end) to clip angle of bridge section (3). Thread three nuts (4) on bolts (1). Position nuts (4) midway between holes on bolts (1). Install three retainers (5) (one each) in hole in threaded end of each bolt (1).

(b) Position the clip angle of second ramp section (6) to align with diaphragm (2).

(c) Using three bolts (1), attach other end of diaphragm (2) to clip angle of second ramp section (6). Thread three nuts (4) on bolts (1). Position nuts (4) midway between holes on bolts (1). Install three retainers (5) (one each) in hole in threaded end of each bolt (1).

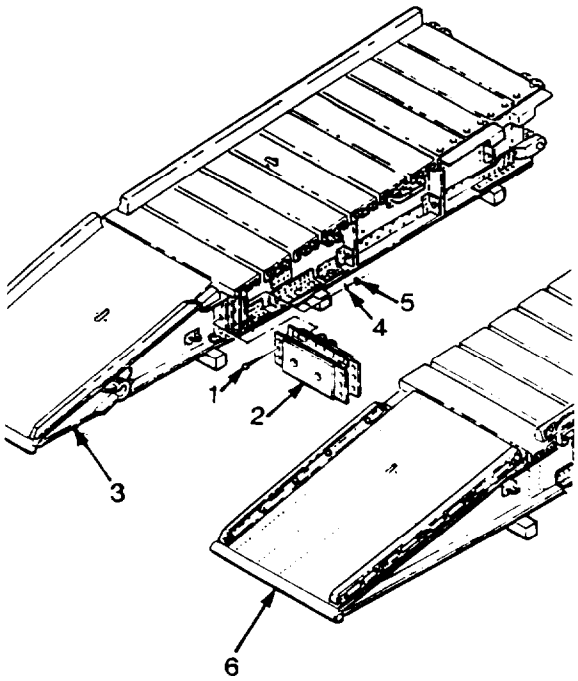

(3) Installation of Cylinder Beam.

NOTE

The cylinder beam pivot mount must point toward the center sections of the bridge.

(a) Position cylinder beam (1) on clip angles of ramp section (2). Install three bolts (3) through clip angle and cylinder beam. Secure one end of cylinder beam by threading three nuts (4) on three bolts (3). Position nuts (4) midway between holes on bolts (3). Install three retainers (5) (one each) in hole in threaded end of each bolt (3).

(b) Position the clip angle of second ramp section (6) to align with the cylinder beam (1).

(c) Install three bolts (3) through clip angle and cylinder beam. Thread three nuts (4) on three bolts (3). Position nuts (4) midway between holes on bolts (3). Install three retainers (5) (one each) in hole in threaded end of each bolt (3).

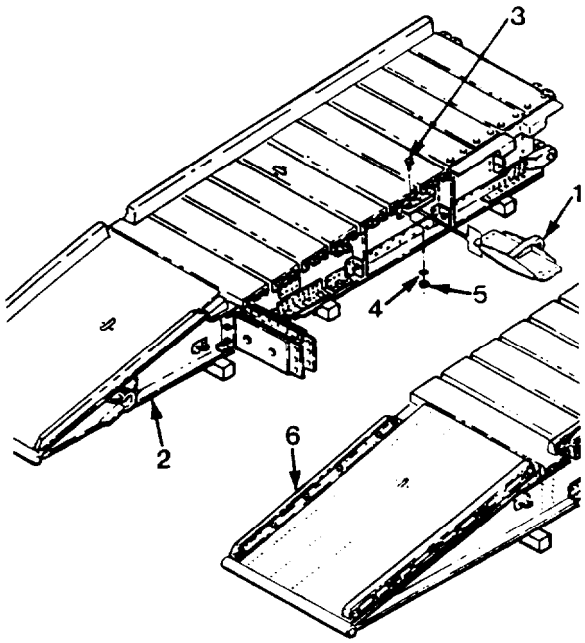

c. Assembly of the Bridge Separated into Eight Sections - CONT

(4) Installation of Lateral Brace.

NOTE

Be sure previously attached components line up on same side of clip angles as opposite ramp.

(a) Align the two ramp sections so an equal separation distance is on each end.

(b) Align the lateral brace (1) with holes on the bottom flange of the inside girders of ramp sections (2) and (3). Place four bolts (4) through holes with heads of bolts to the top.

(c) Tighten bolts (4).

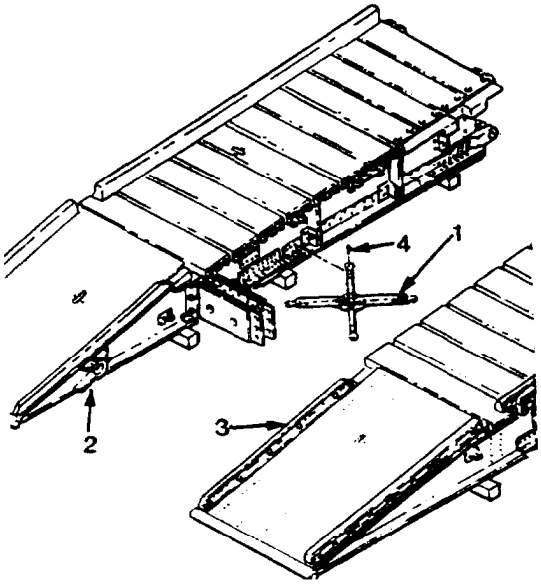

(5) Installation of Ramp Section Transverse Braces.

NOTE

The pintles of the transverse braces are threaded. The brace can be installed on either side of the clip angles. Brace (1) is the shorter of two transverse braces.

(a) Position first transverse brace (1) so holes align with clip angles on ramp sections.

(b) Insert four bolts (2) through clip angles and thread into transverse brace (1), Tighten four bolts (2).

Position second transverse brace (3) so holes align with clip angles on ramp sections. Insert four bolts (2) in transverse brace (3). Do not tighten. Brace (3) will be secured after the scissor cylinder has been installed.

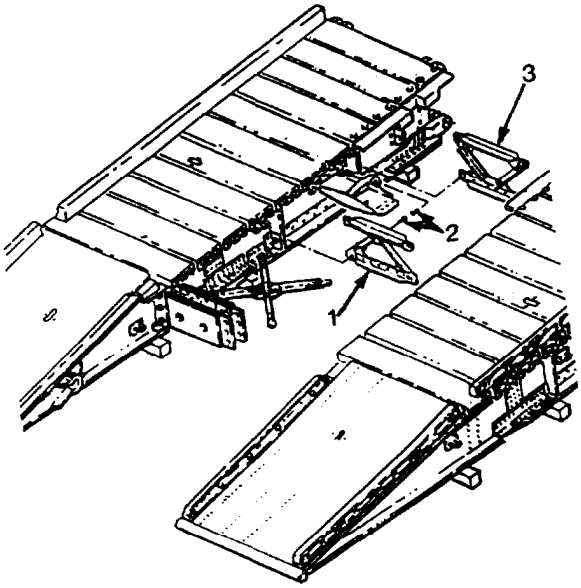

c. Assembly of the Bridge Separated into Eight Sections - CONT

(6) Flexible Hydraulic Hose Connections.

(a) Place additional crib timbers about 3 ft in front of and in line with each of the assembled ramp sections.

(b) Attach one 2 ft 8 in. flexible hydraulic hose (1) to the hydraulic line (2) located at the hinge end of the assembled ramp section. Tighten the flexible hydraulic hose.

(c) Position a female center section on the left timbers with about 1 ft distance between the ends of the ramp and center sections.

(d) Attach remaining end of flexible hose (1) to hydraulic line (3) located on center section. Tighten the flexible hydraulic hose.

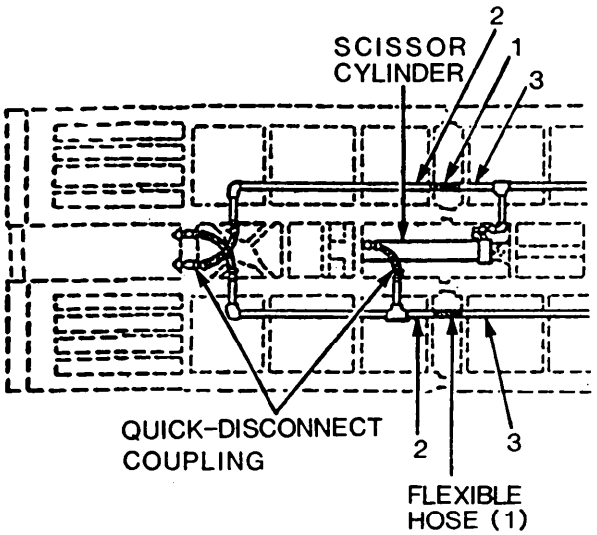

(7) Pinning Ramp and Center Sections.

(a) Position center section (1) with connecting points (2) mating with connecting points (3) of ramp section (4). Install two locking and connecting pins (5) in lower connecting points. Install two retainers (6) in pin (5). Install second two section locking and connecting pins (7) in mated upper connecting points (8) and (9). Install two retainers (10) in pins (7).

(b) Repeat steps (6)(a) thru (d) and step (a) above for second near-shore center section.

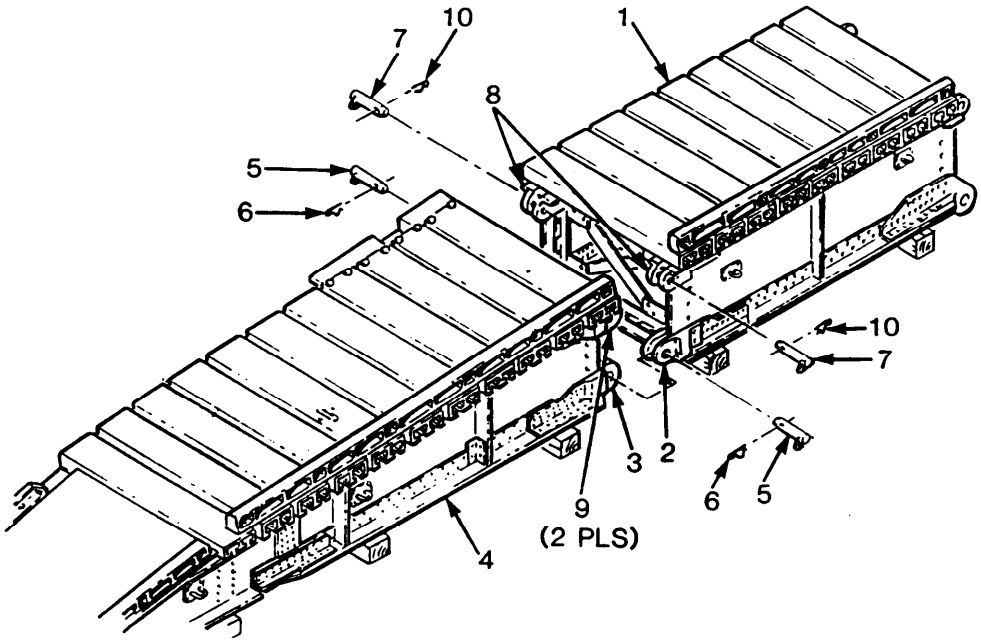

c. Assembly of the Bridge Separated into Eight Sections - CONT

(8) Installation of Scissor Cylinder Supports,

(a) Using two threaded bolts (l), secure lower cylinder support (2) in position between the two center sections (3) and (4) as shown

(b) The second scissor cylinder support (5) will be installed after scissor cylinder by attaching to sections (3) and (4) and securing with two bolts (6).

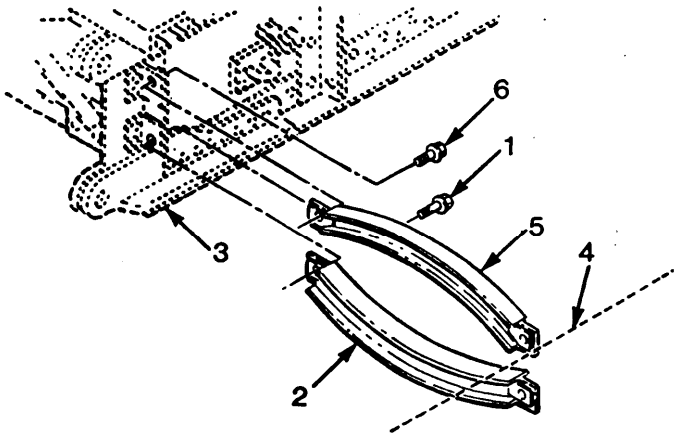

(9) Installation of Scissor Cylinder.

WARNING

The scissor cylinder is heavy. Use care when lifting to prevent injury. Stay out from under the scissor cylinder at all times.

(a) Remove protective cup (if used) from threads of rod end (1) of scissor cylinder (2). Thread clevis (3) on threads of rod end (l).

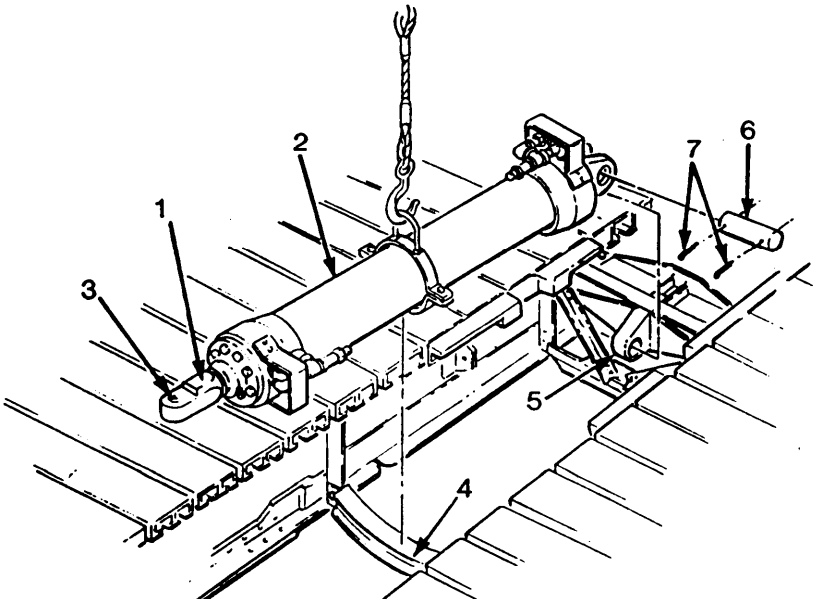

(b) Lift scissor cylinder (2) using a lifting device and center over lower cylinder support (4).

(c) Lower scissor cylinder (2) on lower cylinder support (4) while working into position for mating. Slide unbolted transverse brace (see step (5)(c), reference item (3)) from clip angles over pin end of scissor cylinder. Pin scissor cylinder (2) to cylinder beam (5) using pin (6) and secure with two cotter pins (7).

(d) Refer to paragraph 2-3c(5)(c) and secure transverse brace.

(e) Refer to paragraph 2-3c(8)(b) and install upper scissor cylinder support.

c. Assembly of the Bridge Separated into Eight Sections - CONT

(10) Installation of Center Section Traverse Braces

NOTE

The pintles of the transverse braces are threaded. The brace maybe installed on either side of the clip angles.

(a) Using four bolts (l), install first center transverse brace (2) to male and female center sections (3) and (4). Tighten bolts (l).

(b) Using four bolts (5), install second center transverse brace (6) to male and female center sections (3) and (4). Tighten bolts (5).

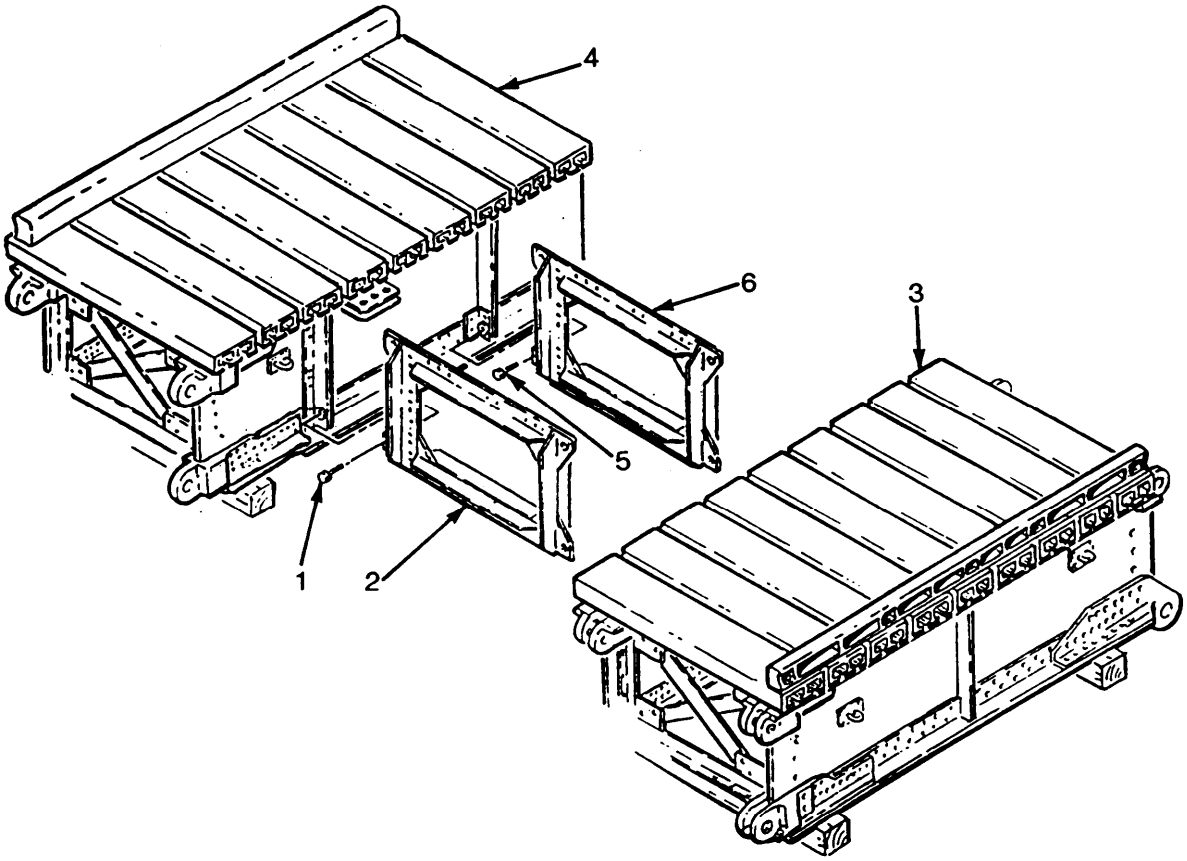

(11) Assembly of Far-Shore Center Sections.

(a) Place crib timbers in front of the completed half of the bridge.

(b) Place a male center section on the left timbers and a female center section on the right timbers. Aline the two center sections with the assembled near-shore half of the bridge. Allow 1 ft of separation between the assembled half of the bridge and the center sections.

c. Assembly of the Bridge Separated into Eight Sections - CONT

(12) Installation of Far-Shore Center Sections Flexible Hydraulic Hoses.

WARNING

Do not raise sections off the ground to hookup hydraulic connections. The section could fall causing serious injury or death.

(a) Install one 10 ft flexible hydraulic hose (1) through the hose guides (2) located on center section (3). Connect the flexible hose as shown. Be sure hose is tight.

(b) Connect the other end of the flexible hydraulic hose (1) to the assembled near-shore half of the bridge (4).

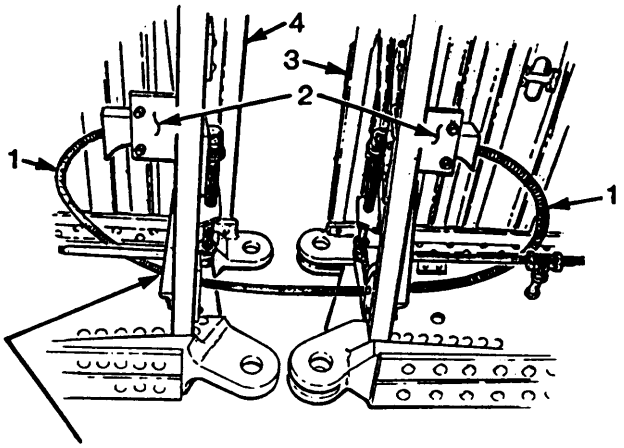

NOTE: View is from underneath looking up.

(c) Repeat steps (a) and (b) for other center section (not shown).

(13) Installation of Locking Pins, Lubricated Center Section, and Quadrant Hinge Pins.

SECTION LOCKING AND CONNECTING PIN

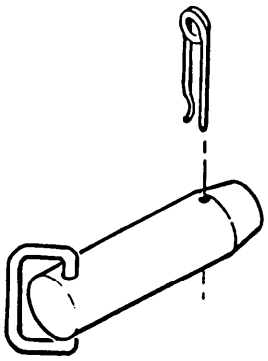

QUADRANT HINGE PIN

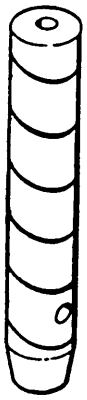

QUADRANT LOCKING PIN

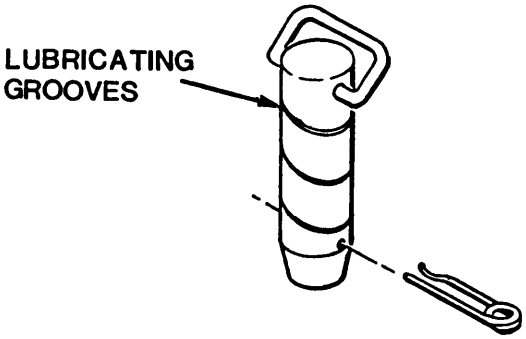

WARNING

Use care when pinning sections. Sections are heavy and can cause injury to personnel.

(a) Position the two far-shore center sections next to the assembled near-shore half. Aline the male and female hinges.

c. Assembly of the Bridge Separated into Eight Sections - CONT

NOTE

Some side to side and up and down movement maybe required to aline hinge points for pinning.

(b) The two center section locking pins have lubrication fittings and are used on the outside end connectors at the bottom of the hinge joint Install two center section hinge pins (1) through connecting points (2) (Outside View).

(c) Install two retainers (3) in pins (l). Install top center section pin connector (4) through connecting points (5). Install retainer(6) in connector (4).

(d) Install two quadrant hinge pins (7) in the inside connectors (8) of center sections (9) and (10) so that the hole for the quadrant locking pin retraining hole (11) is located toward the middle area between the two sections (Inside View). For ease of installation of quadrant, retaining hole (11) must run from the 10:30 to the 4:30 position (45° in reference to the ground). Retaining hole (11) must be 4 1/2 ± 1/2 in. from the surface (8) of center section hinges.

(e) Insert pin connector (12) in connector points (13). Install retainer (14) in connector (12).

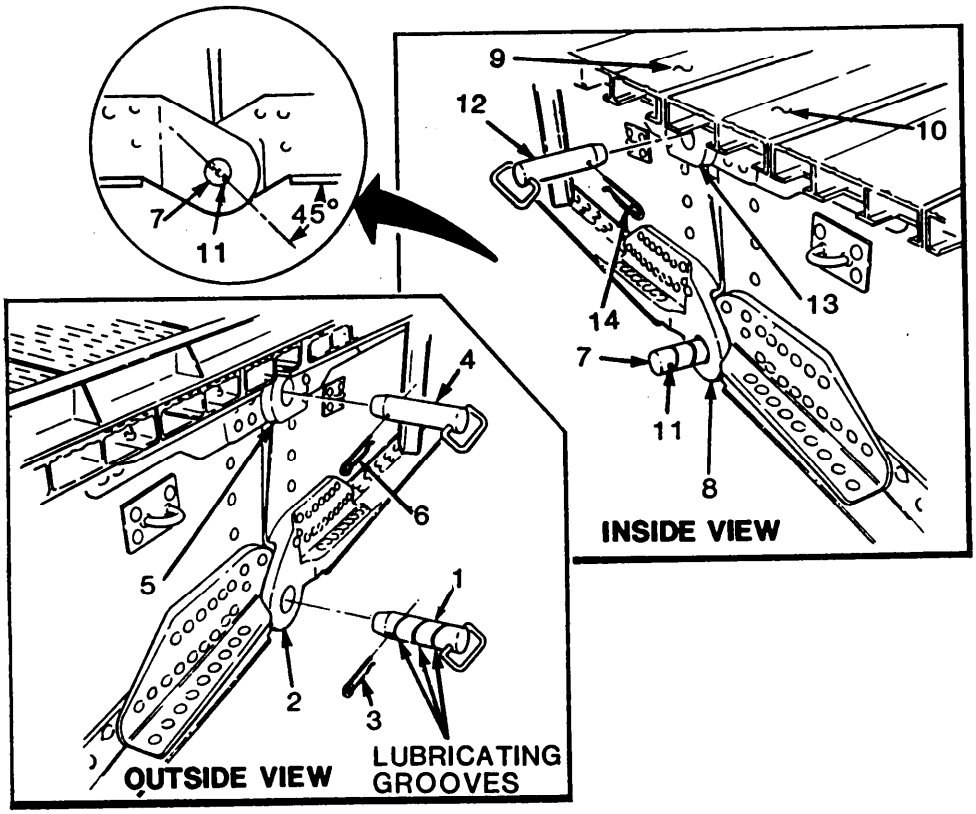

c. Assembly of the Bridge Separated into Eight Sections - CONT

(14) Installation of Far-Shore Center Section Transverse Braces.

NOTE

The pintles of the transverse braces are threaded. The brace maybe installed on either side of the clip angles.

(a) Position first transverse brace (1) so holes aline with clip angles on center sections (2) and (3).

(b) Insert four bolts (4) through clip angles and thread into transverse brace (l). Tighten four bolts (4).

(c) Position second transverse brace (5) so holes aline with clip angles on center sections (2) and (3).

(d) Insert four bolts (6) through clip angles and thread into transverse brace (5). Tighten four bolts (6).

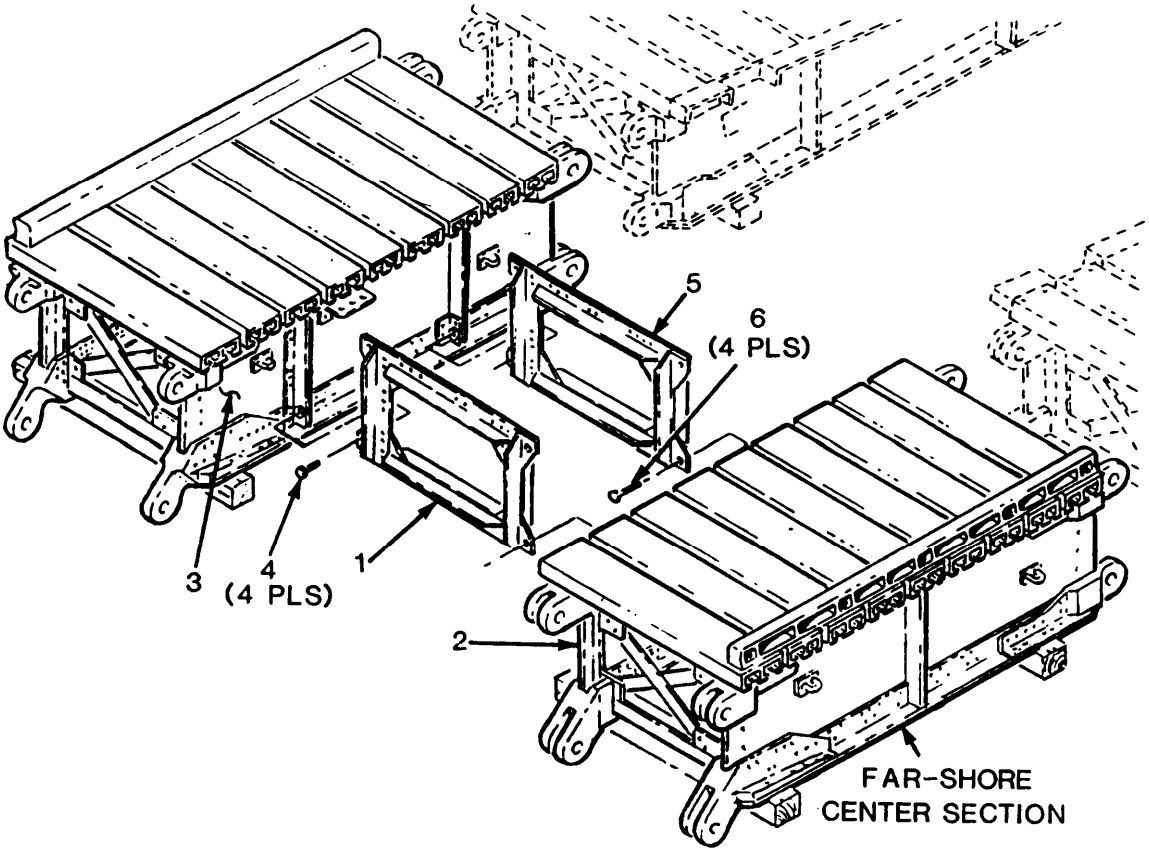

c. Assembly of the Bridge Separated into Eight Sections - CONT

(15) Positioning of Far-Shore Ramp Sections.

(a) Place four crib timbers in line with the assembled portion of the bridge to support the far-shore ramp sections.

(b) Position a male ramp section and a female ramp section on the timbers. Leave about 1 ft separation between the ramp sections and the center sections to connect the hydraulic hoses.

(16) Installation of Far-Shore Ramp Section Flexible Hydraulic Hoses.

(a) Connect 2 ft 8 in. hydraulic hose (1) to center section and ramp section.

(b) Position second ramp section and aline so an equal distance exists between both ramp sections, leaving about 1 ft separation between ramp section and adjoining center section.

(c) Position and aline the two ramp sections so an equal separation distance is on each end.

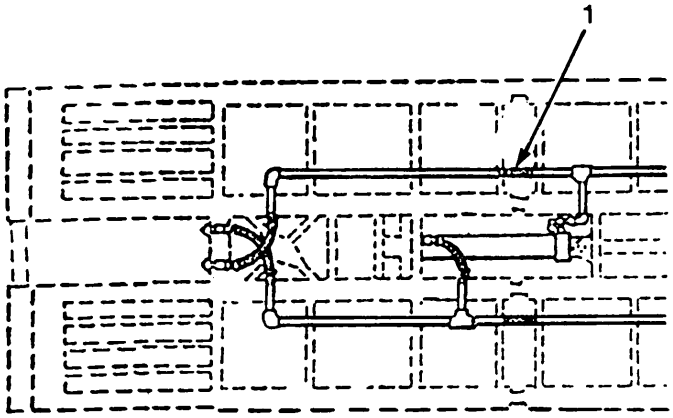

(17) Installation of Far-Shore Diaphragm, Lateral, and Transverse Braces. Refer to page 2-24.

(a) Using three bolts (3), attach one end of diaphragm (4) (pintle holes facing toward ramp end) to clip angle of ramp section (1). Thread three nuts (5) on bolts (3). Tighten bolt/nut assemblies. Place three retainers (6) in outside holes located on threaded end of three bolts (3).

(b) Position the clip angle of second ramp section (2) to aline with the diaphragm (4).

(c) Using three bolts (7), attach other end of diaphragm (4) to clip angle of second ramp section (2). Thread three nuts (8) on bolts (7). Tighten bolt/nut assemblies. Place three retainers (9) in holes located on threaded end of three bolts (7).

(d) Aline the lateral brace (10) with holes on the bottom flange of the inside girders of ramp sections (1) and (2). Place four bolts (11) through holes with heads to the top as shown.

(e) Tighten bolts (11).

NOTE

The pintles of the transverse braces are threaded. The brace maybe installed on either side of the clip angles.

(f') Position first transverse brace (12) so holes aline with clip angles on ramp sections (1) arid (2).

c. Assembly of the Bridge Separated into Eight Sections - CONT

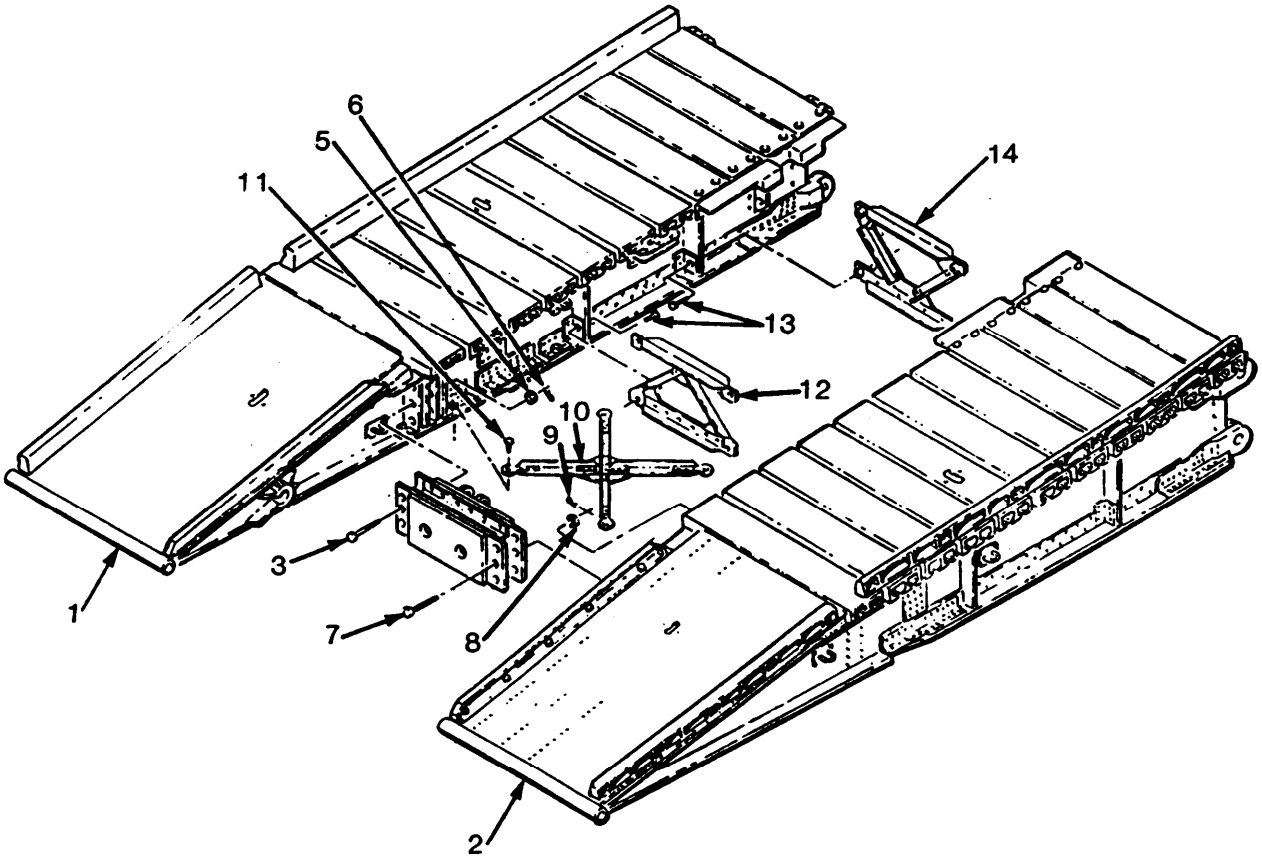

(g) Insert four bolts (13)through clip angles and thread into transverse brace (12). Tighten four bolts (13).

(h) Position second transverse brace (14) wholes aline with clip angles on ramp sections(l) and (2).

(i) Inter second four bolts (13) through clip angles and thread into transverse brace (l4). Tighten four bolts (13).

c. Assembly of the Bridge Separated into Eight Sections - CONT

(18) Installation of Far-Shore Hydraulic Hoses.

(a) Thread 2 ft 8 in. flexible hydraulic hose (1) to hydraulic connection point (2) on far-shore center section (3).

(b) Thread other end of hose (1) to connecting point (4) on far-shore ramp section (5). Ensure hose connections are tight.

(c) Thread second 2 ft 8 in. flexible hydraulic hose (6) to hydraulic connection point (7) on second far-shore center section (8).

(d) Thread other end of hose (6) to connecting point (9) on other far-shore ramp section (10). Ensure hose connections are tight..

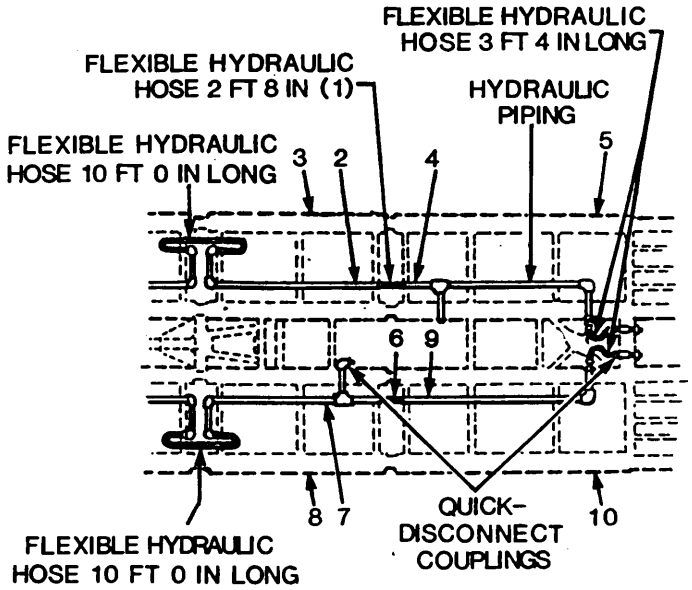

(19) Pinning Far-Shore Ramp and Center Sections.

(a) Using a lifting device and sling, position the assembled far-shore ramp sections so the top four end connectors (1) can be pinned.

(b) Insert one locking pin (2) through each of the four end connectors of the assembled far-shore center and ramp sections as shown. It may be necessary to lightly tap the locking pins in with a hammer.

(c) Remove cribbing (3) from under ramp sections.

(d) lower the assembled and attached ramp sections to a point which allows the lower four end connectors (4) to be pinned.

(e) Insert one locking pin (5) through each of the four lower end connectors as shown. It may be necessary to lightly tap the locking pins in with a hammer. Insert four retainers (6) in pins (2) and (5).

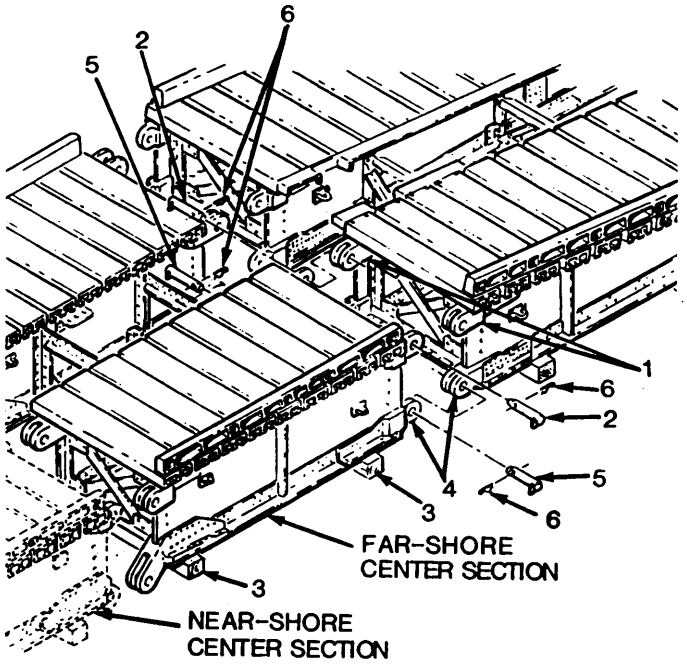

c. Assembly of the Bridge Separated into Eight Sections - CONT

(20) Installation of Cable Beam.

(a) Slide cable beam (1) on seats (2) and (3) located on the inside girders of far-shore center sections (4) and (5).

(b) Place one bolt (6) in each side to stop cable beam from sliding. Do not secure cable beam at this time.

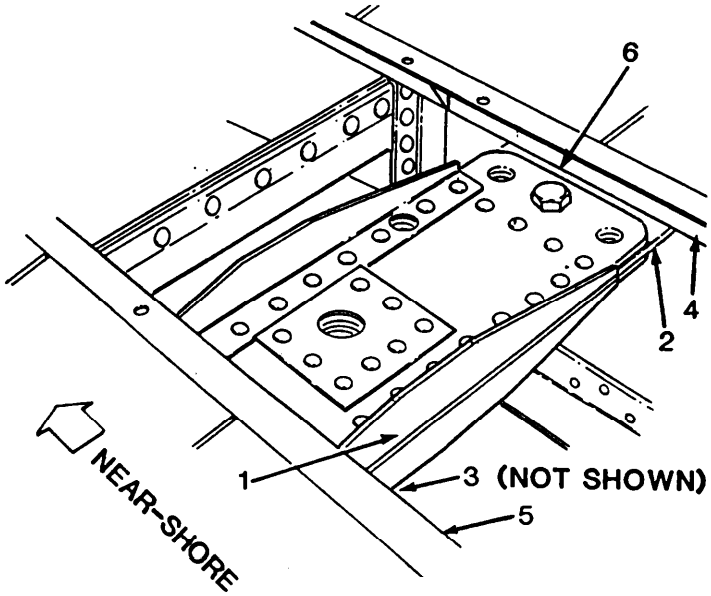

(21) Installation of Quadrant.

NOTE

Ensure quadrant retaining holes are 4 1/2* 1/2 in. from the surface of center section hinges.

(a) Using a lifting device and sling, position the quadrant (1) facing the near-shore end of the bridge.

c. Assembly of the Bridge Separated into Eight Sections - CONT

(b) Place the quadrant (1) in position so that it rests on the installed quadrant hinge pins (2) and (3).

(c) Close the two coupling hinges (4) and (5). Insert one quadrant hinge pin (6) through each hinge from the center of the bridge outward. Install pin retainer (7) through quadrant hinge pin.

(d) Insert a second quadrant locking pin (8) from the rear, passing through the center pin (2) and out between the hinges (4) and (5). Install second retainer (9) in quadrant locking pin (8).

(e) Repeat steps (c) and (d) for opposite side.

(f) Install a third quadrant locking pin (10) through the two angular plates (11) passing over installed pin (8). Install retainer (12) in pin (10). Repeat for opposite side.

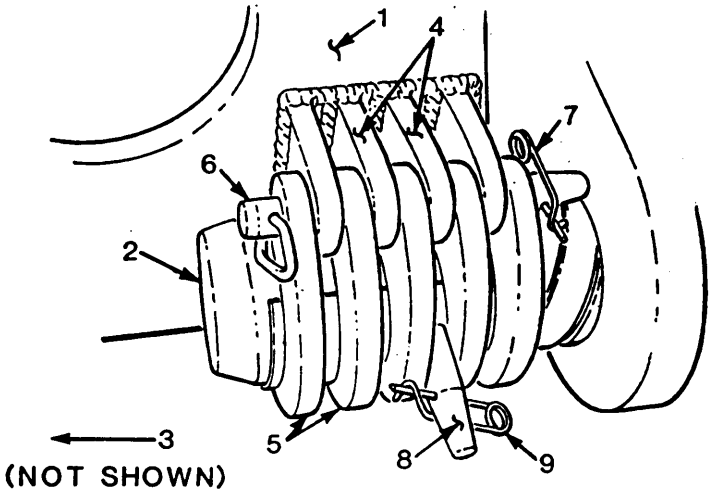

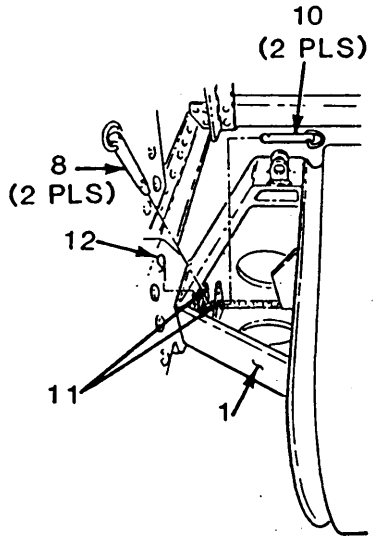

(22) Quadrant Struts and Securing Hardware.

(a) Install first of two quadrant struts (1) into strut mount (2) located at the top of quadrant (3).

(b) Position pin retainer of cable retainer to not get in the way of bolt (4).

(c) Insert bolt (4) through hole in strut mount (2), through slot in strut (l), and extend out through bottom of strut mount.

(d) Thread nut (5) on bolt (4) until snug. Place locking retainer pin (6) through hole in bolt (4). Ensure retainer is secure in bolt.

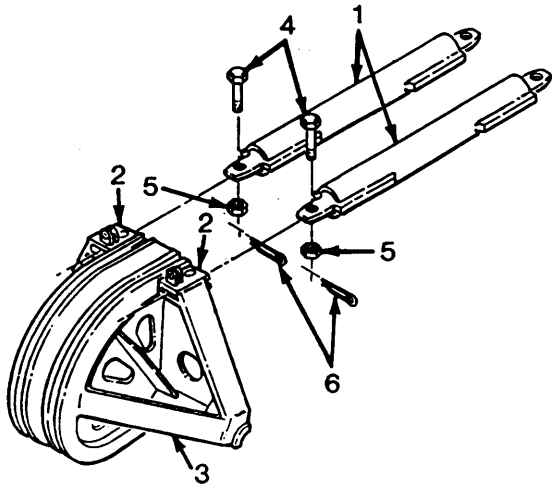

c. Assembly of the Bridge Separated into Eight Sections - CONT

(e) Repeat steps (a) thru (d) for second quadrant strut(l).

(23) Attaching Quadrant Struts to Cable Beam.

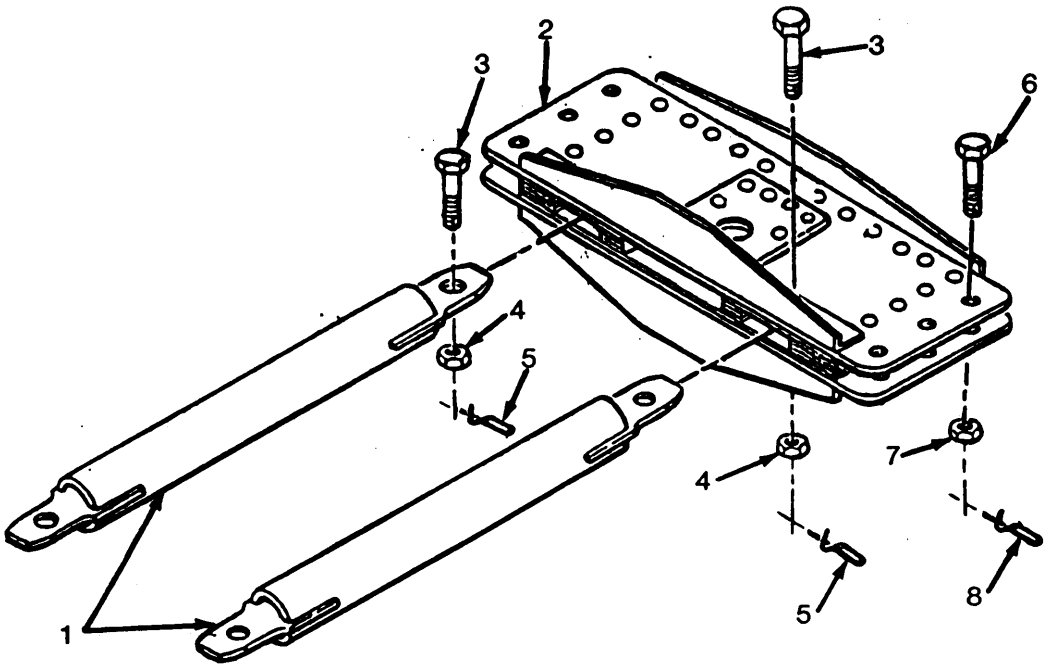

WARNING

The cable beam was not bolted when placed in position. It is very heavy and bulky. It could shift and fall causing injury to personnel. Have one crew member hold the cable beam in position while a second crew member attaches the components or hardware.

(a) Remove two bolts (previously installed in step (20)(b)) used to hold cable beam in place. Insert two quadrant struts (1) in cable beam (2). Insert two bolts (3) through cable beam (2) and struts (l).

(b) Thread two nuts (4) on two bolts (3) until snug. Place two locking retainer pins (5) through holes in two bolts (3). Ensure retainers are secure.

(c) Using six bolts (6), secure cable beam (2) to the seats provided on the inside girder of the far-shore center sections.

(d) Thread six nuts (7) on six bolts (6) until snug. Place six bolt retainers (8) through holes in six bolts (6). Ensure retainers are secure.

c. Assembly of the Bridge Separated into Eight Sections - CONT

(24) Ramp Sections Flexible Hydraulic Hose Connections and Brackets.

NOTE

The two hoses mounted on the diaphragm of the near-shore end must cross. Hoses for the far-shore do not cross.

(a) Install one 3 ft 4 in. flexible hydraulic hose (1) to the fitting located on the near-shore female ramp section (2).

(b) Remove the quick-release plug end (3) from pipe nipple (4).

(c) Insert the quick-release plug end (3) of the flexible hydraulic hose (1) through the opposite quick-disconnect bracket (5) located on the diaphragm (6). Thread quick-release plug end (3) on pipe nipple (4). Place protective dust cap (7) in holder (8).

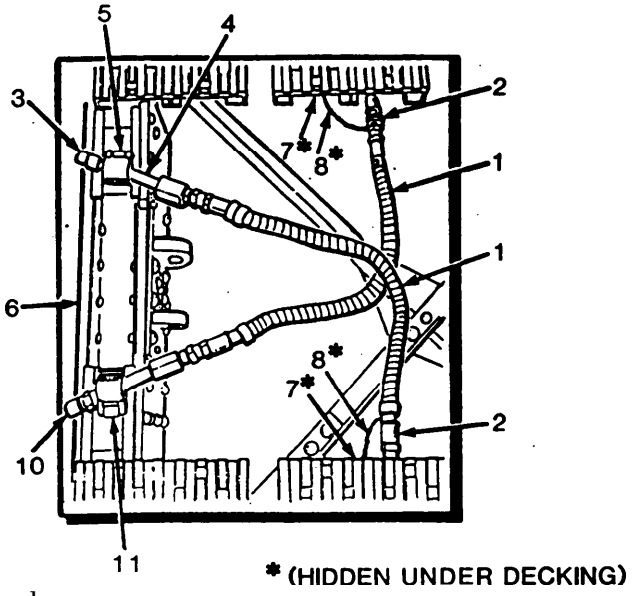

(d) Repeat steps (a) thru (c) for remaining hoses.

(25) Scissor Cylinder Flexible Hydraulic Connections.

(a) Connect one end of 4 ft 6 in. flexible hydraulic hose (1) to fitting (2) located on near-shore male ramp section (3).

(b) Connect other end to cap end (end connected to beam cylinder) fitting (4) located on scissor cylinder (5).

(c) Connect one end of second 4 ft 6 in. flexible hydraulic hose (6) to fitting (7) located on near-shore female ramp section (8).

(d) Connect other end to the scissor cylinder at the rod end fitting (9). Ensure all hydraulics are secure.

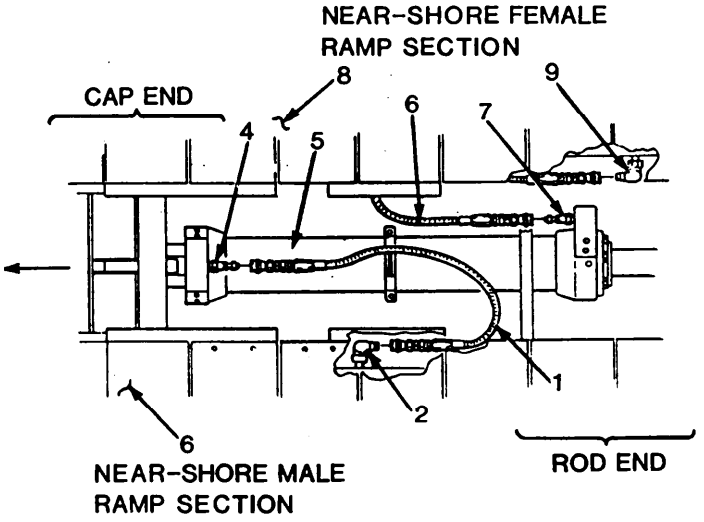

c. Assembly of the Bridge Separated into Eight Sections - CONT

(26) Hydraulic Quick-Release Connectors.

WARNING

FRH hydraulic fluid may contain Tricresyl Phosphate which, if taken internally, can cause paralysis. Hydraulic fluid may be absorbed through the skin. If hydraulic fluid gets on skin, thoroughly wash with soap and water as soon as possible.

(a) Pull a launcher forward to connect the hydraulic lines between the launcher and the 3 ft 4 in. flexible hydraulic quick-disconnect lines.

(b) Connect the hydraulic connection by guiding the male connector (1) to the socket (2). Pull forward on the locking handles (3) on top of the tongue (4) and insert the coupling plug (5) into the quick-release coupling socket (6). Push locking handle back, locking the connector. A visual inspection of the quick-release coupling plugs will ensure the plugs are engaged.

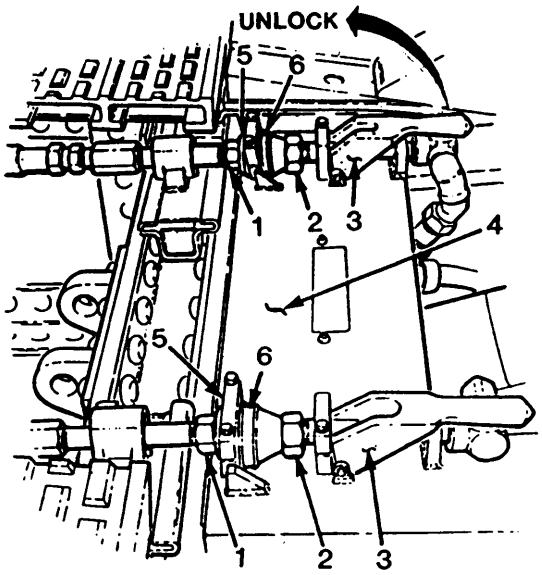

(27) Scissor Cylinder Manual Hydraulic Bleed Valves.

(a) If one or both of the quick-release couplings cannot be engaged, then the scissor cylinder must be bled. There are manual hand bleeding valves (1) on each end of the cylinder (2) for this purpose. The valves (1) are left open just long enough to relieve the pressure.

(b) Refer to Table 2-1. Engage the launcher hydraulics by pulling upon the hydraulic clutch pump lever #7. Lift upon the scissor cylinder lever #3 to extend the cylinder rod.

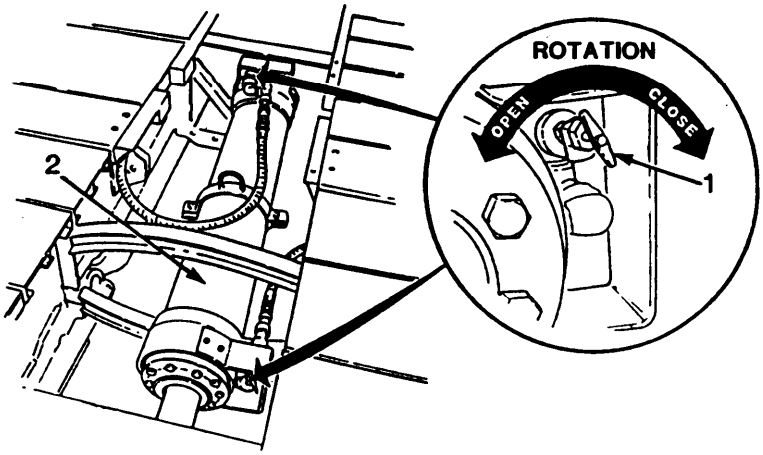

c. Assembly of the Bridge Separated into Eight Sections - CONT

(c) Cease launcher operation. Leave hydraulic connections attached

(28) Equalizer Plate, Scissoring Cables, and Attaching Hardware.

WARNING

Working with the cables, equalizer plate, scissor cylinder, and attaching hardware provides the chance of injury by crushing. Personnel may be injured if a component slips or is dropped. Keep fingers, hands, arms, and legs clear when possible.

CAUTION

It is critical that attention be paid to the rotation of the cable strands. (see Details A and B). Ensure the cables are connected as shown. Failure to do so can result in the cables riding up on the grooved rims of the cable lays of the quadrant damaging the quadrant and possibly dropping the bridge.

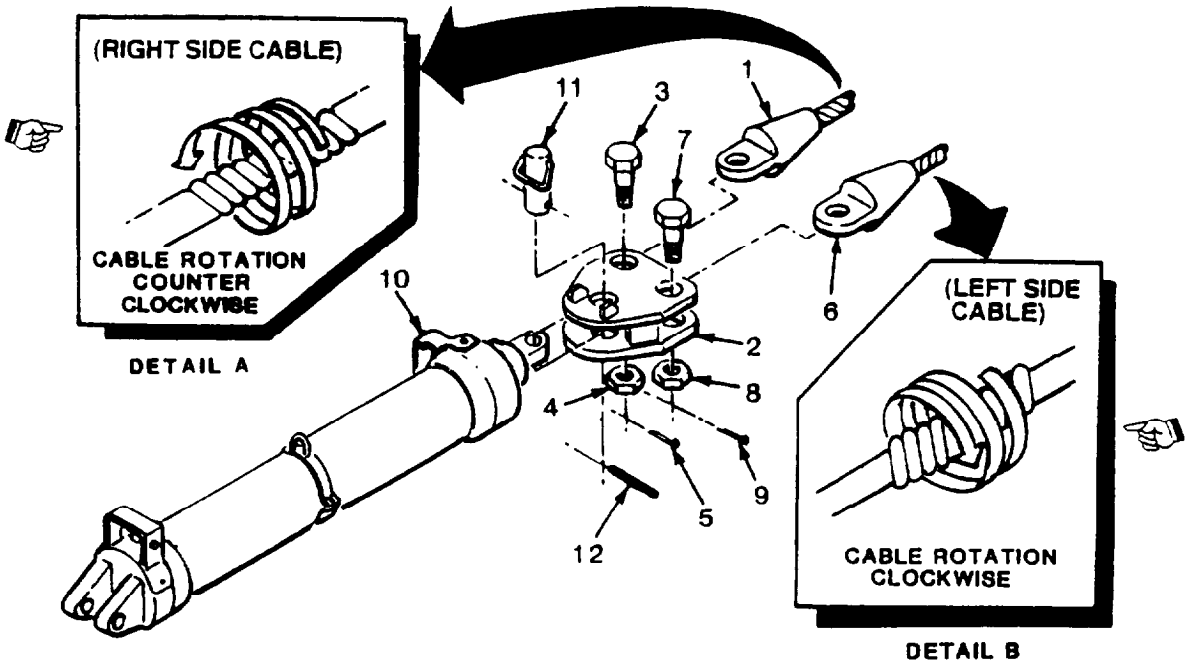

(a) Mate assembled equalizer plate (2) to the rod end of scissor cylinder (10). Pin in position with equalizer plate pin (11).

(b) Insert right scissoring cable (1) (note strand rotations) between the separated plates of equalizer plate (2). Secure in position by placing socket bolt (3) through the top half of the equalizer plate, through the eyelet of scissoring cable (1) and out through the base of the plate (2).

c. Assembly of the Bridge Separated into Eight Sections - CONT

(c) Thread nut (4) on bolt (3) until snug.

(d) Secure bolt/nut in equalizer plate (2) with cotter pin (5) inserted through hole in bolt (3).

(e) Insert left scissoring cable (6) (note strand rotations) between the separated plates of equalizer plate (2). Secure in position by placing socket bolt (7) through the top half of the equalizer plate, through the eyelet of scissoring cable (6) and out through the base of the plate (2).

(f) Thread nut (8) on bolt (7) until snug.

(g) Secure bolt/nut in equalizer plate (2) with cotter pin (9) inserted through hole in bolt (7).

(h) Secure pm (11) using retaining pin (12).

WARNING

Broken cable strands can cause injury. Wear protective gloves when handling cables.

(29) Installation of Cable Retainer.

(a) Lay scissoring cables (1) in grooves (2) of quadrant (3). Ensure cable strands twist as previously instructed.

(b) Position cable retainer (4) between slots (5) located on top of quadrant (3).

(c) Insert locking retainer pins (6) pinning cable retainer (4) in position.

(d) Insert one retainer (7) in each locking retainer pin (6) as shown. Retainers (7) are placed through both ends of retainer pins (6). Flare ends of retainer, if necessary, to reduce the chance of loss.

(e) Insert two pin retainers (8) in opposite ends of two locking retainer pins (6) if previously removed.

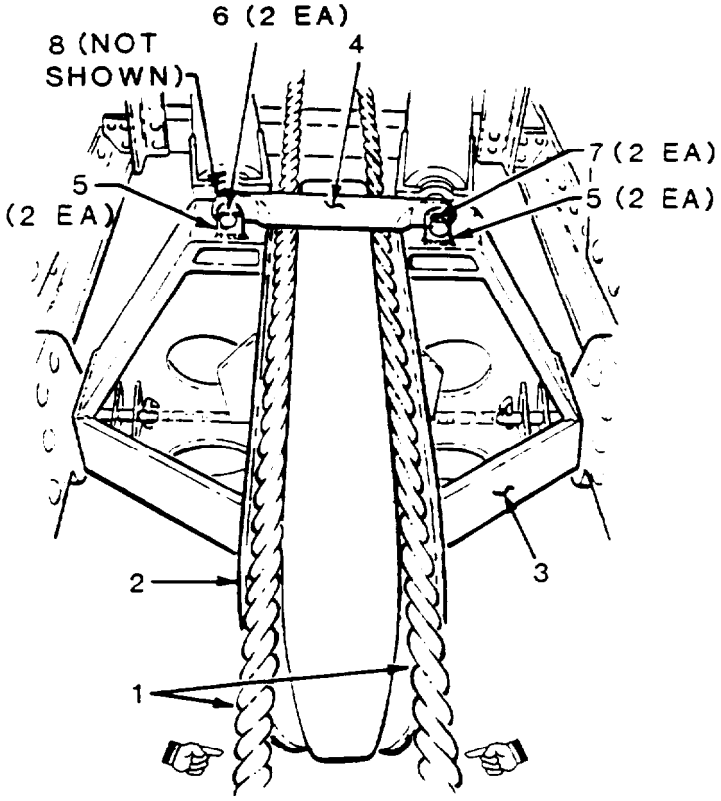

c. Assembly of the Bridge Separated into Eight Sections - CONT

(30) Cables, Cable Beam, and Hardware Connections.

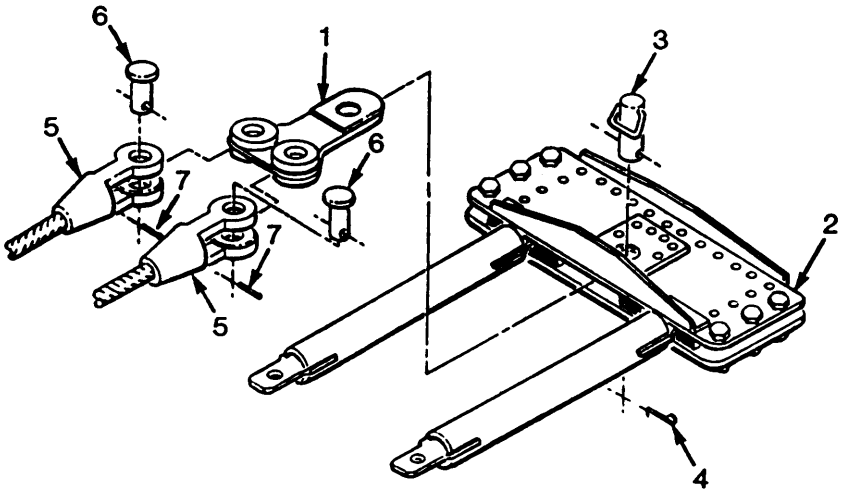

(a) Aline equalizer plate (1) with center hole of cable beam (2). Insert pin (3) through equalizer plate and cable beam with handle to top as shown. Insert cotter key (4) through pin (3). Place equalizer plate (1) between flanges of scissoring cable connectors (5). Aline the holes in both.

(b) Install two quadrant cable retaining pins (6) through scissoring cables (5) and equalizer plate (l).

(c) Install two cotter keys (7) through retaining pins (6) securing assembly. Flare ends of cotter keys (7) to reduce the chance of loss.

(31) Tie Rods, Nuts, Washers, and Ramp Spacers.

(a) Install one flat washer (2) and one nut (1) on end of threaded rod (3). Slide threaded rod (3) through either end of tie rod housings (4) or (5).

(b) Install ramp spacer (6) before installing end of threaded rod (3) through center area of housing as shown.

(c) Install second flat washer (2) and nut (1) on exposed end of threaded rod (3).

Tighten two nuts (l).

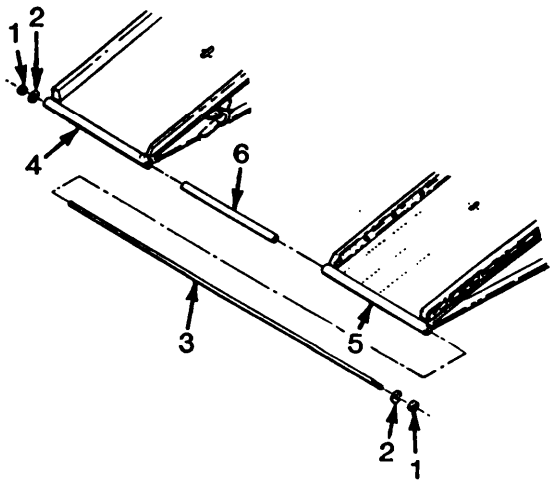

NOTE

Prior to exercising bridge, check FRH fluid levels in launcher.

d. Assembly of Bridge Separated at Center Hinges. These procedures address connecting two separated halves of the bridge (far-shore and near-shore), including the hydraulics, quadrant cables, and connecting hardware. Refer to paragraph 2-3a and 2-3b, Preparation for Assembly, before beginning assembly.

This Task Covers:	Assembly of Two Bridge Halves and Hydraulics Assembly of Bridge Scissoring Components, Cables, and Beams
EQUIPMENT CONDITIONS:	Bridge Separated at Center Hinges
TOOLS/EQUIPMENT:	General Mechanics Tool Box SC 5180-90-N26 Sledge Hammers (8-10 lb) (two required) Lifting Device (15,000 lbs capacity) Sling, Multiple Leg
SUPPLIES:	Four 6 x 6 in. x 12 ft timbers.
PERSONNEL:	Four

(1) Installation of Far-Shore Center Section Flexible Hydraulic Hoses. Refer to paragraph 2-3c(12) steps (a) thru (c).

(2) Installation of Locking Pins, Lubricated Center Section, and Quadrant Hinge Pins.

(a) Using lifting device, position the two center sections next to the assembled half. Aline the male and female hinges.

(b) Refer to paragraph 2-3c(13) steps (b) thru (e).

(3) Installation of Cable Beam. Refer to paragraph 2-3c(20).

(4) Installation of Quadrant. Refer to paragraph 2-3c(21).

(5) Quadrant Struts and Securing Hardware. Refer to paragraph 2-3c(22).

(6) Attaching Quadrant Struts to Cable Beam. Refer to paragraph 2-3c(23).

(7) Hydraulic Quick-Release Connectors. Refer to paragraph 2-3c(26).

(8) Scissor Cylinder Manual Hydraulic Bleed Valves, Refer to paragraph 2-3c(27).

(9) Cables, Cable Beam, and Hardware Connections. Refer to paragraph 2-3c(30).

(10) Installation of Cable Retainer. Refer to paragraph 2-3c(29).

(11) Equalizer Plate, Scissoring Cables, and Attaching Hardware.

(a) Refer to paragraph 2-3c(28) steps (b) thru (g).

(b) Refer to paragraph 2-3c(28) steps (a) and (h).

2-4. DISASSEMBLY OF MLC 60. Disassembly of the MLC 60 will be done in the reverse order of assembly. (Paragraph 2-3).

2-5. ASSEMBLY AND PREPARATION FOR USE OF MLC 70.

The bridge may be received assembled, partially assembled, or in sections. Standby modes are addressed in Chapter 5.

In case complete assembly is required (bridge was received disassembled in 4 sections), one method is to assemble the bridge by sections starting with the near-shore end. This means joining the near-shore male and female sections together by installing the diaphragm, braces, cylinder beam, cylinder supports, and the scissor cylinder and by connecting the hydraulics. Join the far-shore male and female sections together by installing a diaphragm, braces, and cable beam and by connecting the hydraulics. Refer to paragraph 2-5,c, (18) for assembling the two bridge halves together.

a. Instructions for Using Sling. The sling, multiple leg, is made up of two lengths of chain attached on one end to one master link. On the opposite ends of the two chains are two hooks used to lift the male and female sections of the bridge. Refer to page 2-36.

WARNING

Deck extrusions may be slippery. You could fall. Take care when walking on deck.
The lifting sling could strike you. Maintain eye contact with lifting sling at all times.

(1) Connect the master link (1) of the sling (2) to the lifting device being used.

(2) Insert hook end (3) of sling through lifting eye (4) located on bridge section (5). Ensure hook is securely connected.

(3) Repeat step (2) for second lifting eye (4).

(4) When moving operation is complete, reduce pressure on sling by lowering lifting device, disconnect master link (1) and two hooks (3) from two lifting eyes (4).

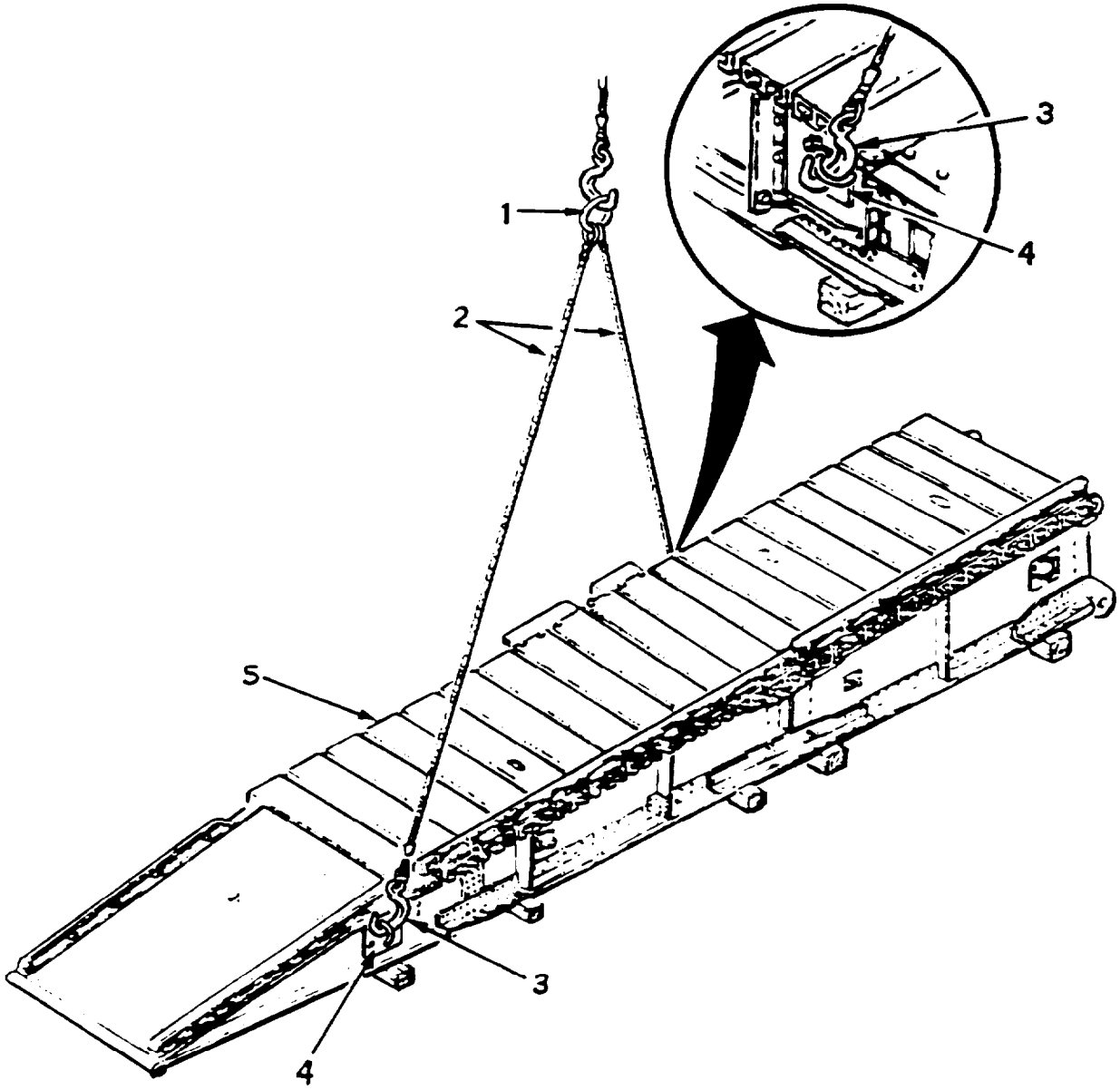
1
2
3
4
5
3
4

2-5. ASSEMBLY AND PREPARATION FOR USE OF MLC 70 - CONT

b. Preparation for Assembly.

NOTE

The bridge may be assembled from either end. The following procedures are for assembling the near-shore end first.

(1) Preparation for Assembly.

(a) Locate an assembly site large enough for transporting vehicles and the lifting device. Allow enough room to unload and position the bridge components without additional shifting. The lifting device should be set up toward the middle of the bridge assembly site. After a transporting vehicle has been unloaded, remove it from the assembly area to give more room

(b) Place six pieces of cribbing (1) on the ground as shown.

(c) Place a female bridge section on the left set of crib timbers and a male section on the right set as shown.

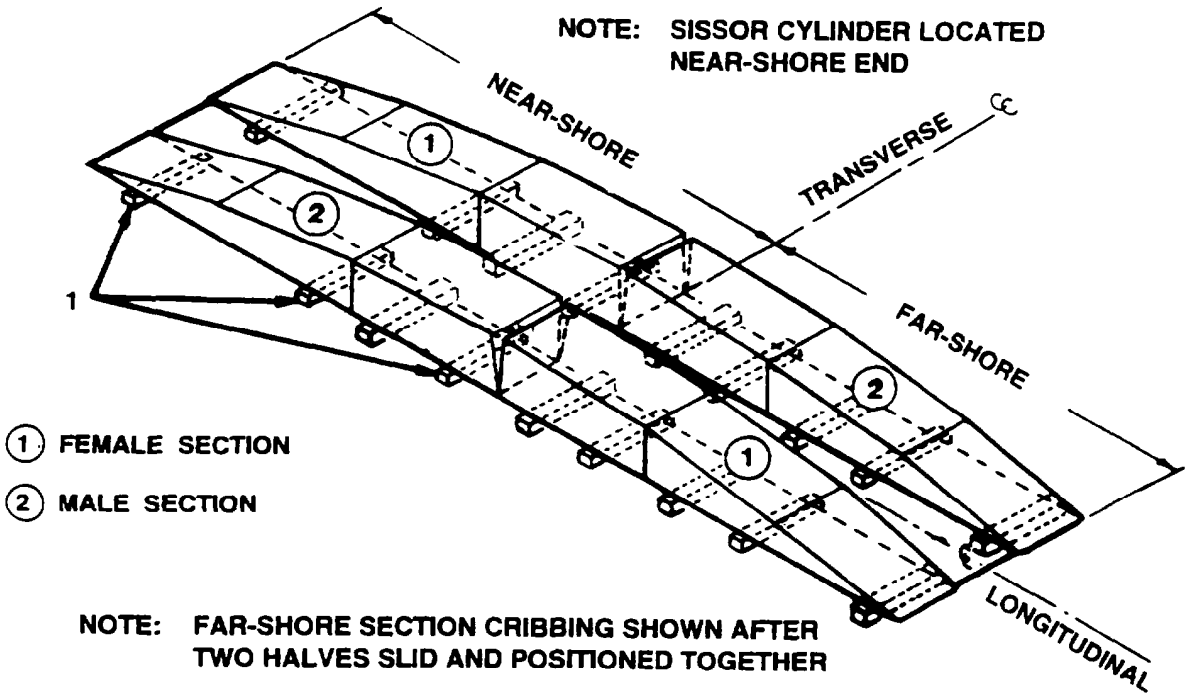

2-5. ASSEMBLY AND PREPARATION FOR USE OF MLC 70 - CONT

c. Assembly of the MLC 70 Bridge.

EQUIPMENT CONDITIONS : Bridge separated into four sections.

TOOLS/EQUIPMENT: General Mechanic's tool Box, SC 5180-90-N26
Sledge Hammer (8-10 lb)
Pry Bars (5-6 A) (three required)
Wrench, Adjustable, (Item 3, Appendix B) (two required)
Lifting Device, 15,000 lb Minimum Lift Capability
Sling, Two leg (NSN TBD)

SUPPLIES: Cribbing, 4x4x6 ft

PERSONNEL: Ten

NOTE

When possible, assemble the bridge on a hard surface, within a unit compound, on an old road bed, etc.

(1) Installation of Holder Bracket (Near-Shore and Far-Shore)

(a) Install holder bracket (1) on diaphragm (2). Align with holes on either side of top of diaphragm. Place flat washer (3) on bolt (4) and install through bracket (1). Install lock washer (5) and nut (6) on bolt (4). Tighten nut/bolt assembly. Repeat for remaining bolt (4).

(b) Repeat step (a) for remaining holder bracket (1) on opposite diaphragm (2).

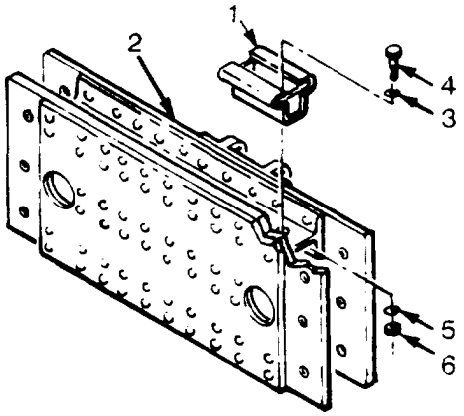

c. Assembly of the MLC 70 Bridge - CONT

(1) Installation of Near Shore Diaphragm

(a) Align the two bridge sections so an equal separation distance is on each end.

(b) Using three bolts (1) attach one end of diaphragm (2) (pintle hole facing toward ramp end) to clip angle of bridge section (3). Thread three nuts (4) on bolts (1). Position nuts (4) midway between holes on bolts (1). Install three retainers (5) (one each) in each bolt (1).

(c) Position the clip angle of second bridge section (6) to align with diaphragm (2)

(d) Using three bolts (1), attach other end of diaphragm (2) to clip angle of second bridge section (6). Thread three nuts (4) on bolts (1). Position nuts (4) midway between holes on bolts (1). Install three retainers (5) (one each) in each bolt (1).

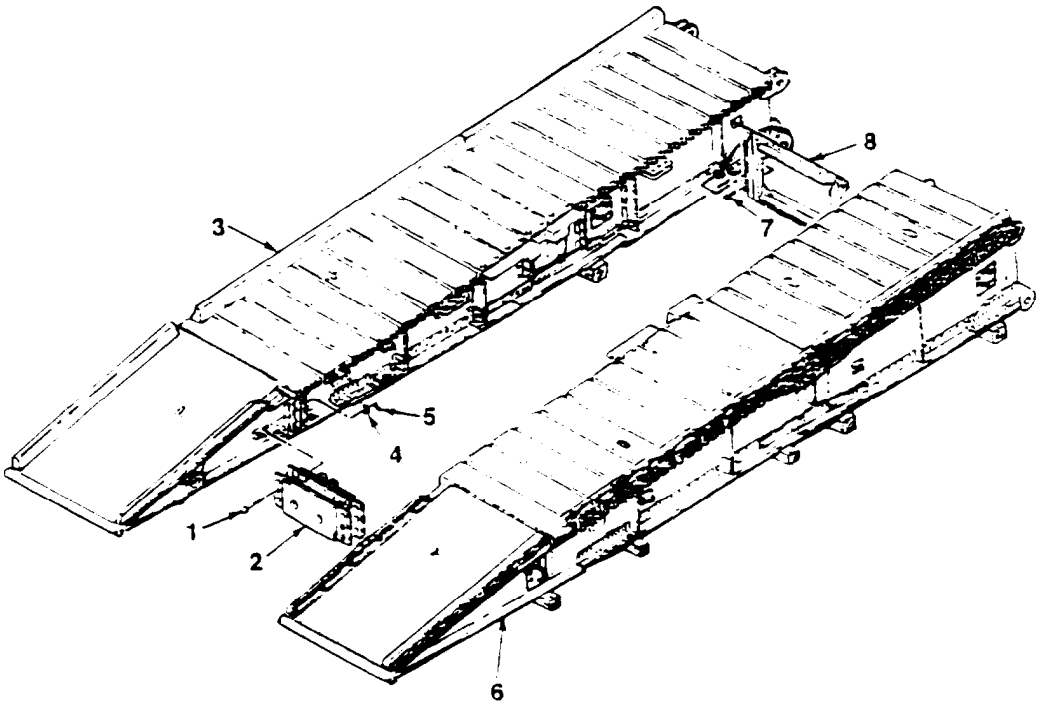

(3) Installation of Near Shore Forward Transverse Brace

NOTE

When installing transverse brace make sure groves in the brace are at the bottom.

(a) Using four bolts (7), install forward transverse brace (8) to female and male bridge sections (3) and (6).

(b) Tighten bolts (7)

c. Assembly of the MLC 70 Bridge - CONT

(4) Installation of Near Shore Lateral Brace.

NOTE

Be sure previously attached components line up on same side of clip angles as opposite section.

(a) Align the lateral brace (1) with holes on the bottom flange of the inside girders of bridge sections (2) and (3). Place four bolts (4) through holes with heads of bolts to the top.

(b) Tighten bolts (4).

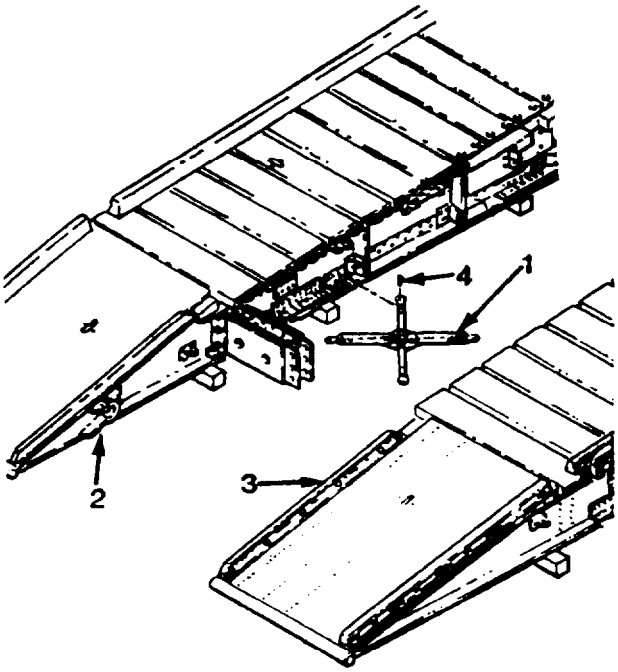

NOTE

The pintles of the transverse braces are threaded.. Transverse brace must be oriented so flag assembly bolt holes are located as shown in inset.

(5) Installation of Near Shore Rear Transverse Brace.

(a) Position the rear transverse brace (5) so holes align with clip angles on sections.

(b) Insert four bolts (6) through clip angles and thread into transverse brace (5).

(c) Tighten four bolts (6).

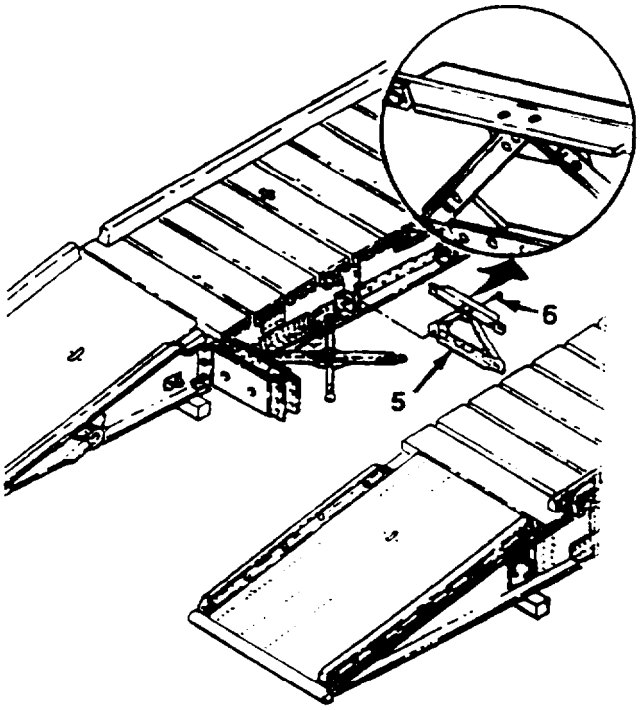

c. Assembly of the MLC 70 Bridge - CONT

(6) Installation of Cylinder Beam.

NOTE

The cylinder beam pivot mount must point toward the center sections of the bridge

(a) Position cylinder beam (1) on clip angles of bridge section (2). Install three bolts (3) through clip angle and cylinder beam. Secure one end of cylinder beam by threading three nuts (4) on three bolts (3). Position nuts (4) midway between holes on bolts (3) Install three retainers (5) (one each) in each bolt (3).

(b) Install remaining three bolts (3) through clip angle and cylinder beam. Secure other end of cylinder beam by threading three nuts (4) on three bolts (3). Position nuts (4) midway between holes on bolts (3). Install three retainers (5) (one each) in each bolt (3).

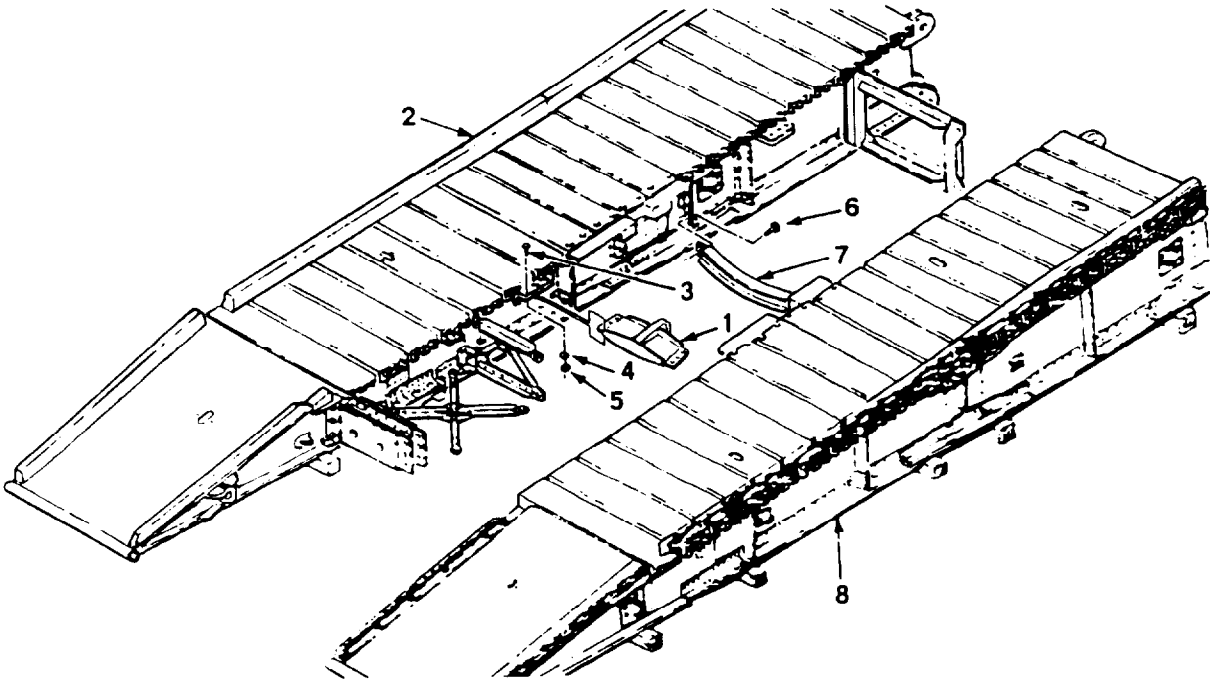

(7) Installation of Lower Cylinder Support.

(a) Using two threaded bolts (6), secure lower cylinder support (7) in position between the two bridge sections (2) and (8). Tighten bolts (6).

(b) The second scissor cylinder support will be installed after the scissor cylinder is installed.

c. Assembly of the MLC 70 Bridge - CONT

(8) Installation of Scissor Cylinder.

WARNING

The scissor cylinder is heavy. Use care when lifting to prevent injury. Stay out from under the scissor cylinder at all times.

NOTE

The transverse brace is installed with the slots in the brace on the bottom.

(a) Slide the near shore second rear transverse brace (1) into position prior to installing the scissor cylinder. DO NOT INSTALL.

(b) Remove protective cup, if used, from threads of rod end (2) of scissor cylinder (3). Thread clevis (4) on threads of rod end (2).

(c) Lift scissor cylinder (3) using a lifting device and center over lower cylinder support (5).

(d) Lower scissor cylinder (3) on lower cylinder support (5) while working into position for mating. Slide unbolted transverse brace (1) from clip angle over pin end of scissor cylinder. Pin scissor cylinder (3) to cylinder beam (6) using pin (7) and secure with two cotter pins (8).

(e) Refer to paragraph 2-5,c,(5) and secure second near-shore transverse brace (1).

(f) Refer to paragraph 2-5,c,(7) and install upper scissor cylinder support.

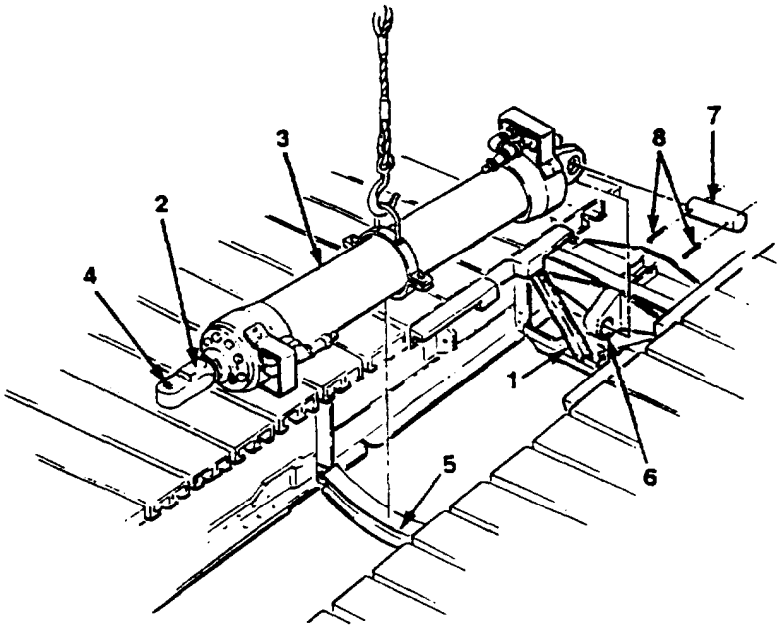

c. Assembly of the MLC 70 Bridge - CONT

(9) Installation of Near Shore Second Forward Transverse Brace.

NOTE

The transverse brace is installed with the slots in the bottom of the brace.

(a) Using four bolts (1) install second forward transverse brace (2) to male and female bridge sections (3) and (4).

(b) Tighten bolts (1)

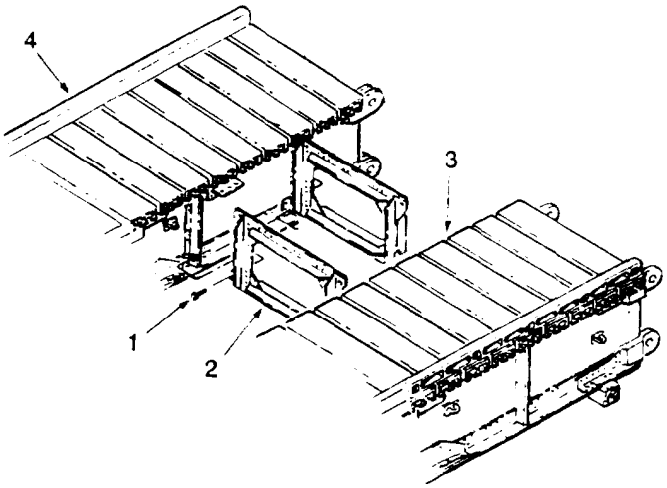

(10) Installation of Far Shore Diaphragm.

(a) Align the two bridge sections so an equal separation distance is on each side.

(b) Using three bolts (1), attach one end of diaphragm (2) (pintle hole facing toward ramp end) to clip angle of bridge section (3). Thread three nuts (4) on bolts (1).). Position nuts (4) midway between holes on bolts (1). Install three retainers (5) (one each) in each bolt (1).

(c) Position the clip angle of second bridge section (6) to align with diaphragm (2).

(d) Using three bolts (I), attach other end of diaphragm (2) to clip angle of second ramp section (6). Thread three nuts (4) on bolts (1). Position nuts half way between hole on bolt. Place three retainers (5) in holes located on threaded end to three bolts (1).

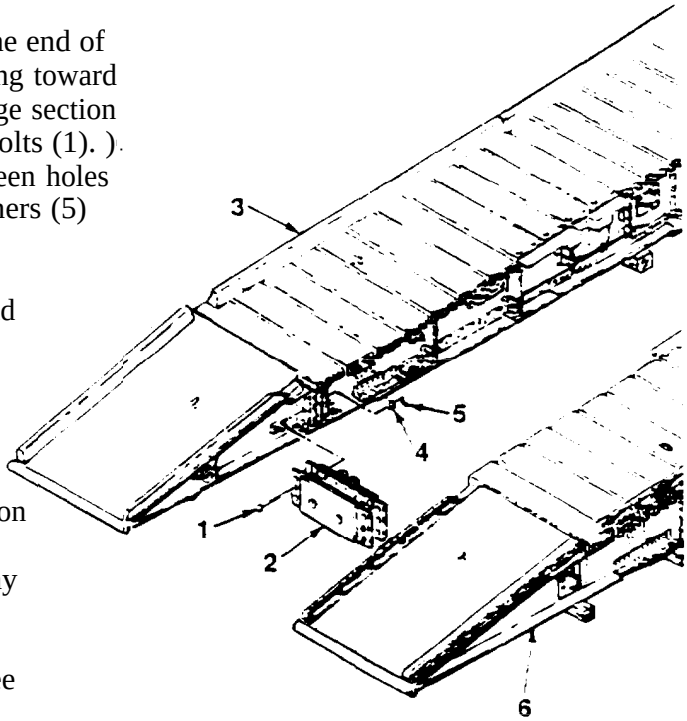

c. Assembly of the MLC 70 Bridge - CONT

(11) Installation of Far Shore Forward Transverse Brace.

NOTE

The transverse brace is installed with the slots in the bottom of the brace.

(a) Using four bolts (1), install forward transverse brace (2) to male and female bridge sections (3) and (4).

(b) Tighten bolts (1).

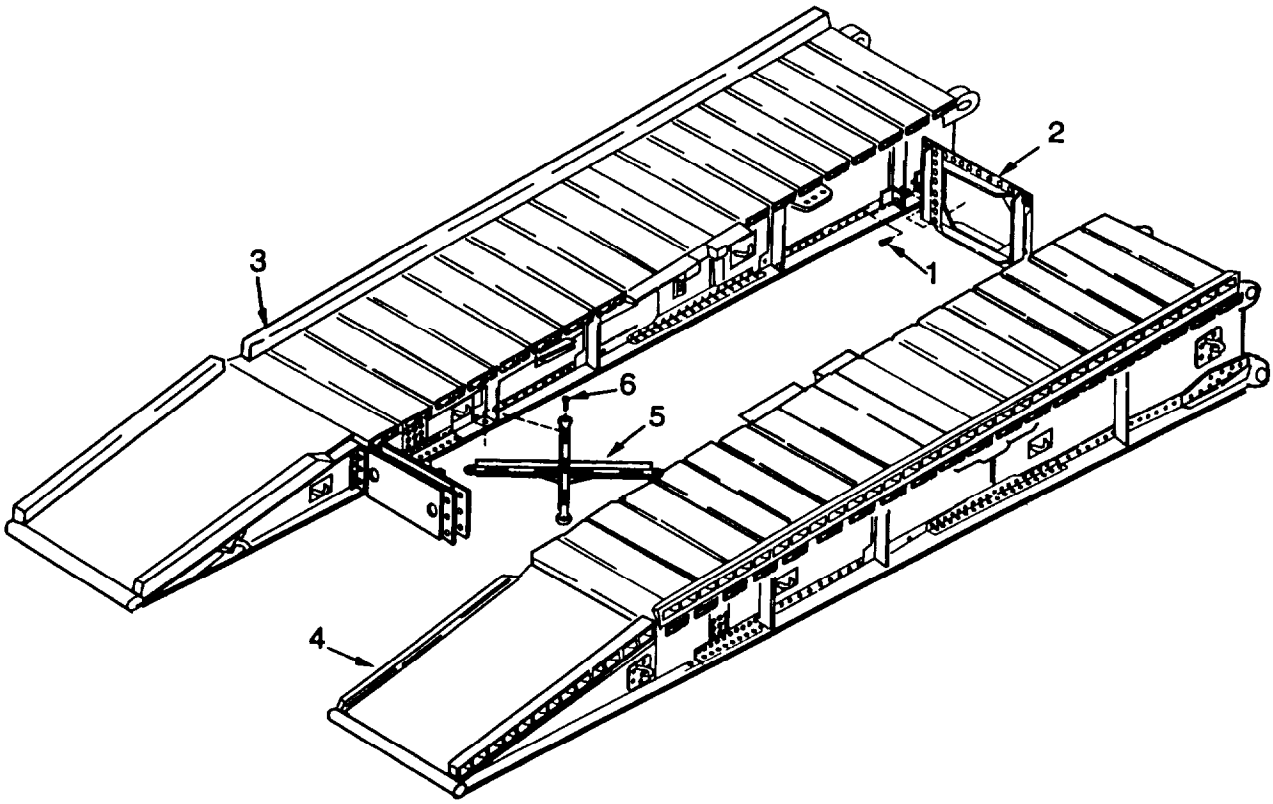

(12) Installation of Far Shore Lateral Brace.

NOTE

Be sure previously attached components line up on same side of clip angles as opposite section.

(a) Align the lateral brace (5) with holes on the bottom flange of the inside girders of bridge sections (3) and (4). Place four bolts (6) through holes with heads of bolts to the top.

(b) Tighten bolts (6).

c. Assembly of the MLC 70 Bridge - CONT

(13) Installation of Far Shore Rear Transverse Brace

NOTE

The pintles of the transverse braces are threaded. Transverse brace must be oriented so flag assembly bolt holes are located as show in inset.

(a) Position the rear transverse brace (1) so holes align with clip angles on bridge sections

(b) Insert four bolts (2) through clip angles and thread into transverse brace (1).

(c) Tighten four bolts (2).

(14) Installation of Far Shore Second Rear Transverse Brace.

NOTE

The transverse brace is installed with the slots in the brace on the bottom.

(a) Position the second rear transverse brace (3) so holes align with clip angles on bridge sections.

(b) Insert four bolts (2) through clip angles and thread into transverse brace (3).

(c)Tighten four bolts

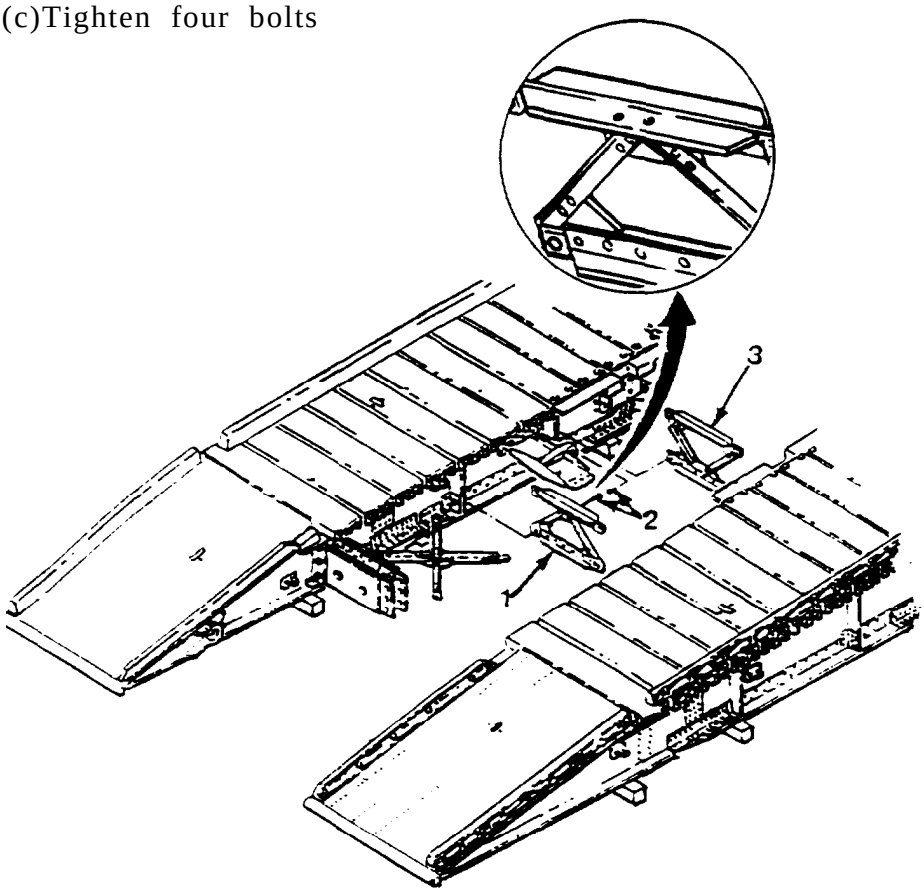

c. Assembly of the MLC 70 Bridge - CONT

(15) Installation of Cable Beam.

(a) Slide cable beam (1) on seat (2) and (3) located on the inside girders of far-shore bridge sections (4) and (5).

(b) Install three bolts (6) in each side of cable beam (1). Position nuts (7) between two holes on bolts (6). Install retaining clip (8) through outer holes of six bolts (6).

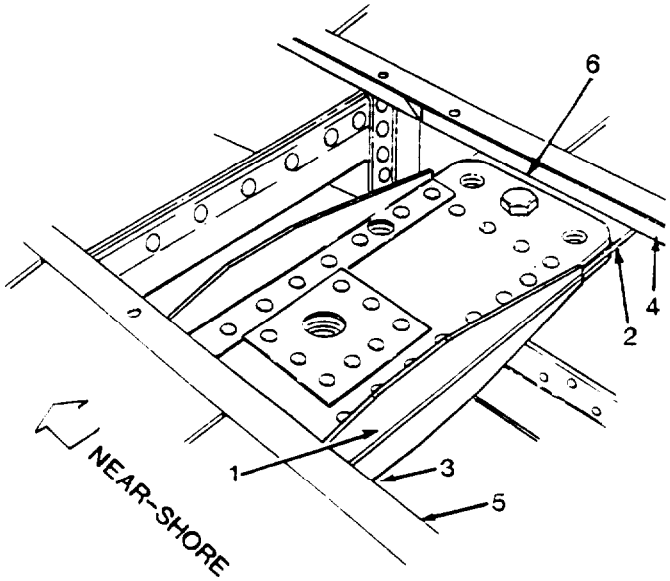

(16) Installation of the Far Shore Second Forward Transverse Brace.

(a) Using four bolts (l), install second forward transverse brace (2) to male and female bridge sections (3) and (4).

(b) Tighten bolts (1).

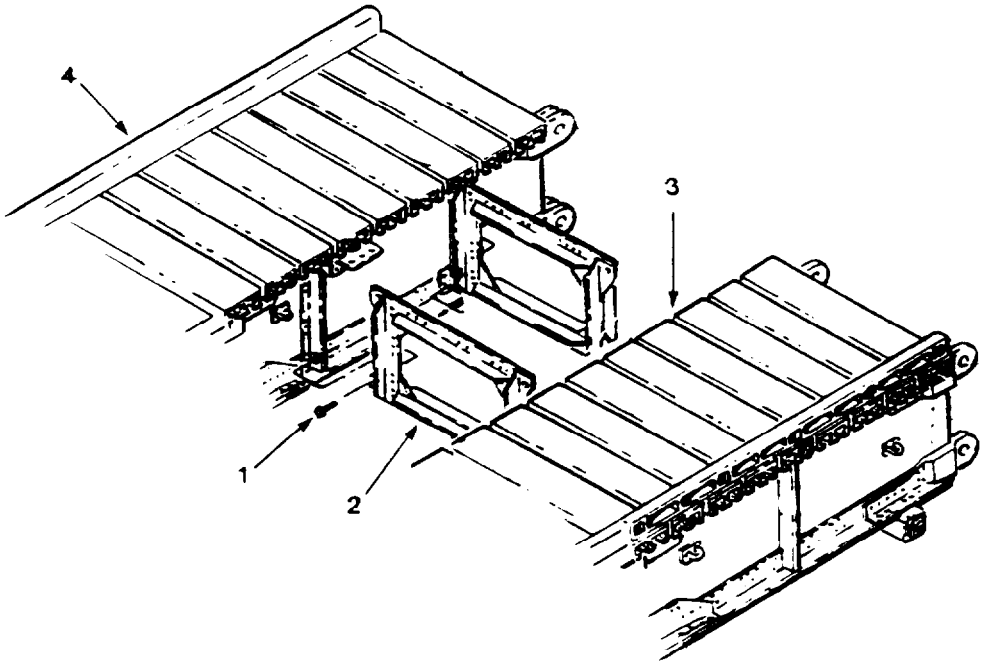

c . Assembly of the MLC 70 Bridge - CONT

(17) Installation of Near-Shore and Far-Shore Hydraulic Lines.

(a) Position the assembled far-shore half next to the near-shore assembly. Align the male and female hinges.

(b) Thread 10 ft 0 in. flexible hydraulic hose (1) to hydraulic connection (2) on far-shore bridge section (3). Tighten hose connection.

(c) Thread other end of hose (1) to hydraulic connection (4) on near-shore bridge section (5). Tighten hose connection.

(d) Repeat steps (a) thru (c) for installing second hydraulic hose

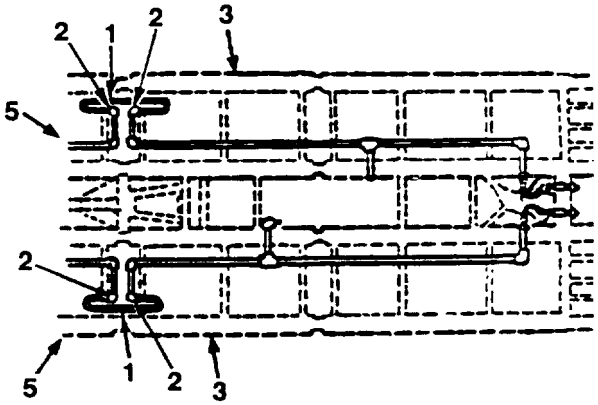

(18) Installation of Bridge Sections, Locking Pins, and Quadrant Hinge Pins.

QUADRANT HINGE PIN

QUADRANT LOCKING PIN

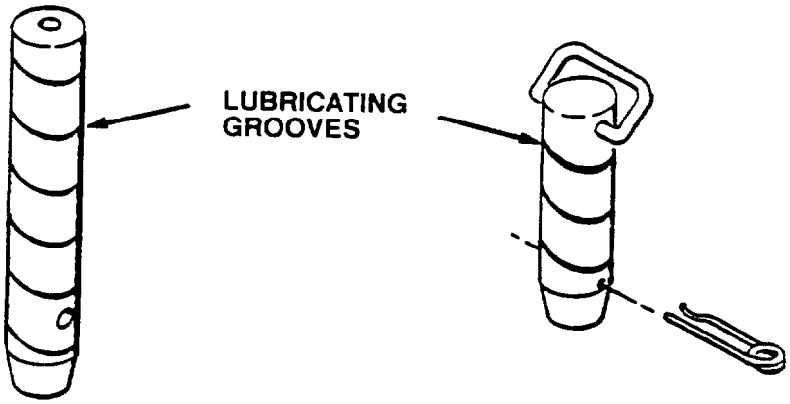

c. Assembly of the MLC 70 Bridge - CONT

WARNING

Use care when pinning sections. Sections are heavy and can cause injury to personnel.

NOTE

Some side to side and up and down movement may be required to align hinge points for pinning.

(a) Install bridge section hinge pin (1) through connecting point (2) (outside view).

(b) Install retainer (3) in pin (1).

(c) Install quadrant hinge pin (4) in the inside connector (5) of bridge sections (6) and (7) so that the hole for the quadrant locking pin retaining hole (8) is located toward the middle area between the two sections (inside view). For ease of installation of quadrant, retaining hole (8) must run from the 10:30 to the 4:30 position (45" in reference to the ground). Retaining hole (8) must be 4 1/2 ± 1/2 in. from the surface of bridge section hinges.

(d) Repeat steps (a) thru (c) for opposite side of bridge section.

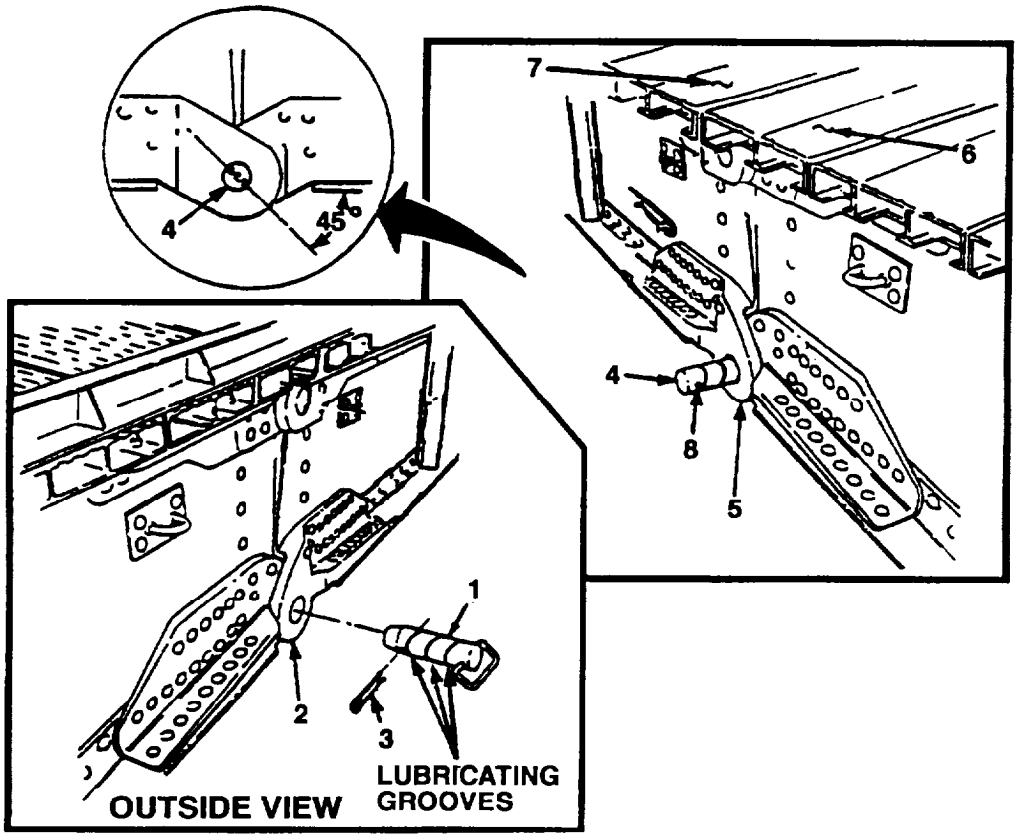

c. Assembly of the MLC 70 Bridge - CONT

(19) Installation of Quadrant

NOTE

Ensure quadrant retaining holes are 4 1/2±1/2 in. from the surface of center section hinges

(a) Using a lifting device and sling, position the quadrant (1) facing the near-shore end of bridge.

(b) Place the quadrant (1) in position so that it rests on the installed quadrant hinge pins (2).

(c) Close the two coupling hinges (3) and (4). Insert one quadrant coupling hinge pin (5) through each hinge from the center of the bridge outward. Install pin retainer (6) through quadrant hinge pin.

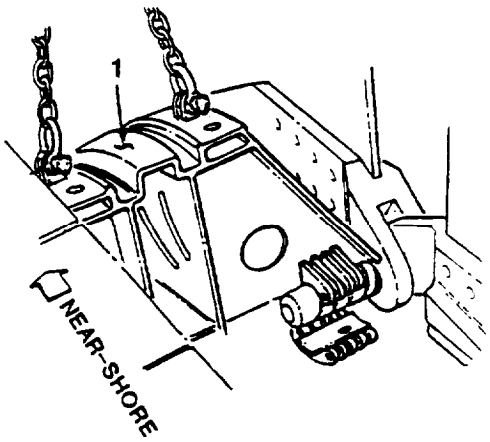

(d) Insert a second quadrant locking pin (7) from the rear, passing through the center pin (2) and out between the hinges (3) and (4). Install second retainer (8) in quadrant locking pin (7).

(e) Repeat steps (c) and (d) for opposite side

(f) Install a third quadrant locking pin (9) through the two angular plates (10) passing over installed pin (7). Install retainer (11) in pin (9). Repeat for opposite side.

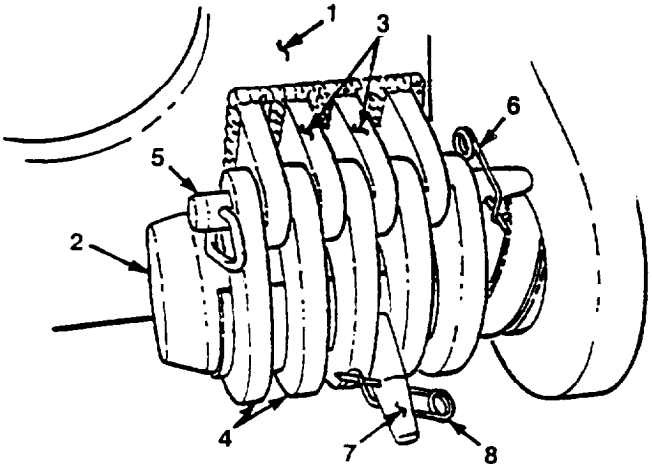

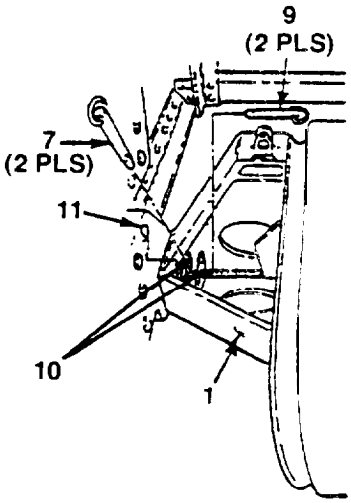

c. Assembly of the MLC 70 Bridge - CONT

(20) Installation of Quadrant Struts and Securing Hardware.

(a) Install first of two quadrant struts (1) into strut mount (2) located at the top of quadrant (3).

(b) Position pin retainer of cable retainer to not get in the way of bolt (4).

(c) Insert bolt (4) through hole in strut mount (2) through slot in strut (1) and extend out through bottom of strut mount.

(d) Thread nut (5) on bolt (4) until snug. Place locking retainer pin (6) through hole in bolt (4). Ensure retainer is secure in bolt.

(e) Repeat steps (a) thru (d) for second quadrant strut (1).

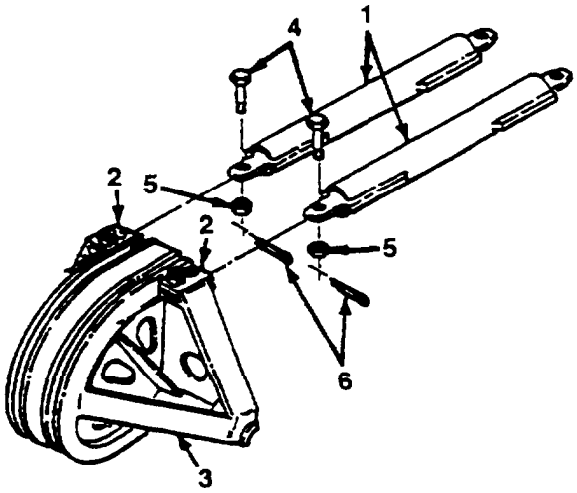

(21) Attaching Quadrant Struts to Cable Beam.

(a) Insert two quadrant struts (1) in cable beam (2). Insert two bolts (3) through cable beam (2) and struts (1).

(b) Thread two nuts (4) on two bolts (3) until snug. Place two locking retainer pins (5) through holes in two bolts (3). Ensure retainers are secure.

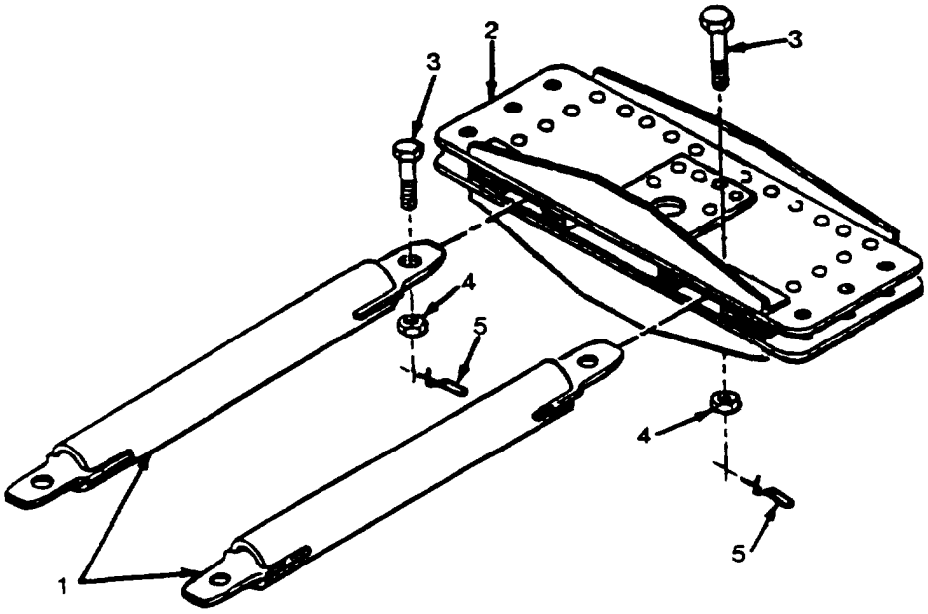

c. Assembly of the MLC 70 Bridge - CONT

(22) Bridge Sections Flexible Hydraulic Hose Connections and Brackets.

NOTE

The two hoses mounted on the diaphragm of the near-shore end must cross. Hoses for the far-shore do not cross.

(a) Install one 3 ft. 4 in. flexible hydraulic hose (1) to the fitting located on the near-shore female section (2).

(b) Remove the quick-release plug end (3) from pipe nipple (4).

(c) Insert the quick-release plug end (3) of the flexible hydraulic hose (1) through the opposite quick-disconnect bracket (5) located on the diaphragm (6). Thread quick-release plug end (3) on pipe nipple (4). Place protective dust cap (7) in holder (8).

(d) Install one 3 ft. 4 in. flexible hydraulic hose (1) to the fitting located on the far-shore female ramp section (2).

(e) Remove the quick-release plug end (3) from pipe nipple (4).

(f) Insert the quick-release plug end (3) of the flexible hydraulic hose (1) through the quick-disconnect bracket (5) located on the diaphragm (6). Thread quick-release plug end (3) on pipe nipple (4). Place protective dust cap (7) in holder (8).

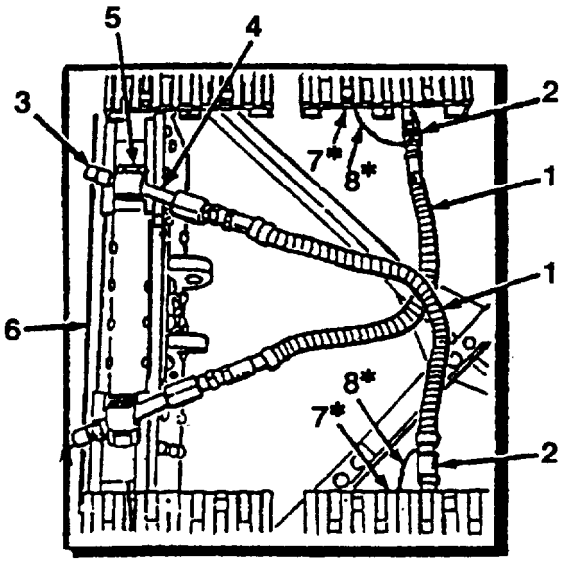

*(HIDDEN UNDER DECKING)

c. Assembly of the MLC 70 Bridge - CONT

(23) Scissor Cylinder Flexible Hydraulic Connections.

(a) Connect one end of 4 ft. 6 in. flexible hydraulic hose (1) to fitting (2) located on near-shore male bridge section (3).

(b) Connect other end to cap end (end connected to beam cylinder) fitting (4) located on scissor cylinder (5).

(c) Connect one end of second 4 ft. 6 in. flexible hydraulic hose (6) to fitting (7) located on near-shore female ramp section (8).

(d) Connect other end to the scissor cylinder at the rod end fitting (9). Ensure all hydraulics are secure.

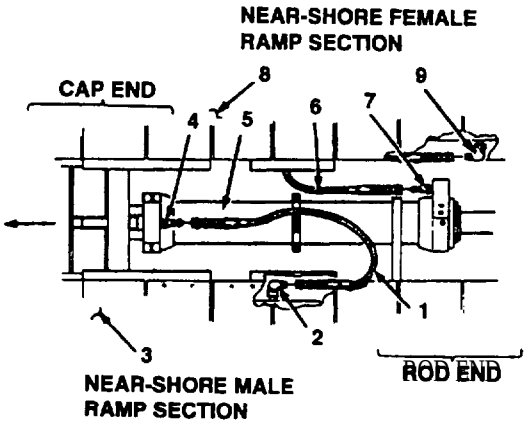

(24) Equalizer Plate, Scissoring Cables, and Attaching Hardware. Refer to page 2-53.

WARNING

Working with the cables, equalizer plate, scissor cylinder, and attaching hardware provides the chance of injury by crushing. Personnel may be injured if a component slips or is dropped. Keep fingers, hands, arms, and legs clear when possible.

CAUTION

It is critical that attention be paid to the rotation of the cable strands. (see Details A and B, 2-53). Ensure the cables are connected as shown. Failure to do so can result in the cables riding up on the grooved rims of the cable lays of the quadrant damaging the quadrant and possibly dropping the bridge.

(a) Insert right scissoring cable (1) (note strand rotations) between the separated plates of equalizer plate (2). Secure in position by placing socket bolt (3) through the top half of the equalizer plate, through the eyelet of scissoring cable (1) and out through the base of the plate (2).

(b) Thread nut (4) on bolt (3) until snug.

(c) Secure bolt/nut in equalizer plate (2) with cotter pin (5) inserted through hole in bolt (3).

(d) Insert left scissoring cable (6) (note strand rotations) between the separated plates of equalizer plate (2). Secure in position by placing socket bolt (7) through the top half of the equalizer plate, through the eyelet of scissoring cable (6) and out through the base of the plate (2).

c. Assembly of the MLC 70 Bridge - CONT

(e) Thread nut (8) on bolt (7) until snug.

(f) Secure bolt/nut in equalizer plate (2) with cotter pin (9) inserted through hole in bolt (7).

(g) Mate assembled equalizer plate (2) to the rod end of scissor cylinder (IO). Pin in position with equalizer plate pin (11).

(h) Secure pin (11) using retaining pin (12).

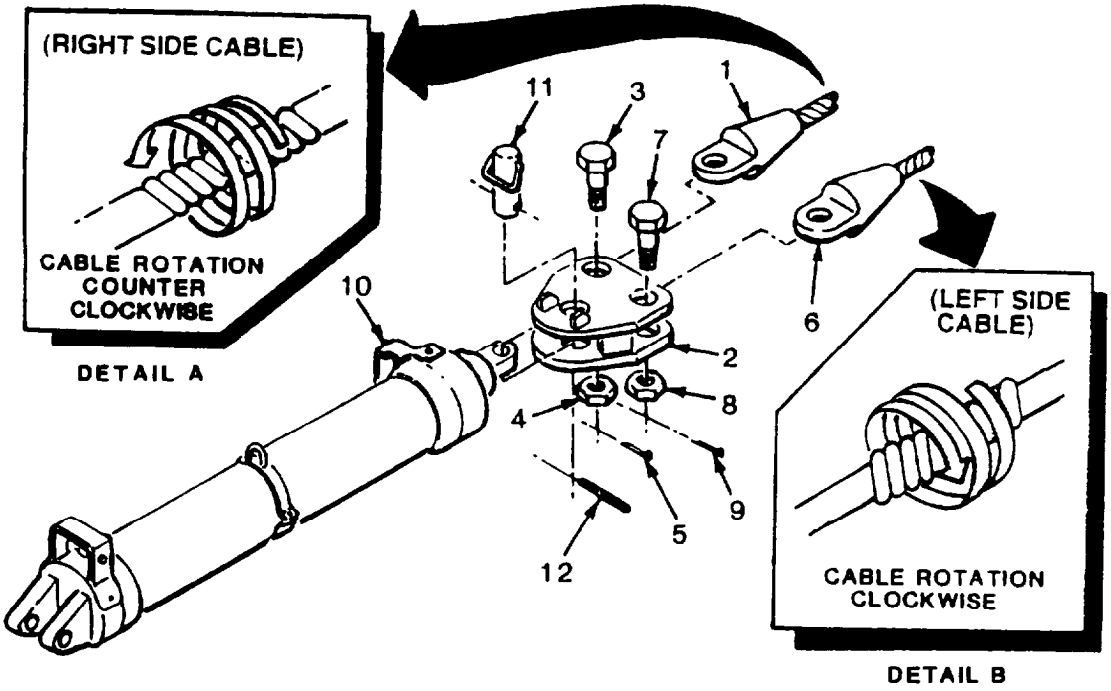

c. Assembly of the MLC 70 Bridge - CONT

(25) Installation of Cable Retainer.

WARNING

Broken cable strands can cause injury. Wear protective gloves when handling cables.

(a) Lay scissoring cables (1) in grooves (2) of quadrant (3). Ensure cable strands twist as previously instructed.

(b) Position cable retainer (4) between slots (5) located on top of quadrant (3).

(c) Insert locking retainer pins (6) pinning cable retainer (4) in position.

(d) Insert one retainer (7) in each locking retainer pin (6) as shown. Retainers (7) are placed through both ends of retainer pins (6). Flare ends of retainer, if necessary, to reduce the chance of loss.

(e) Insert two pin retainers (8) in opposite ends of two locking retainer pins (6) if previously removed.

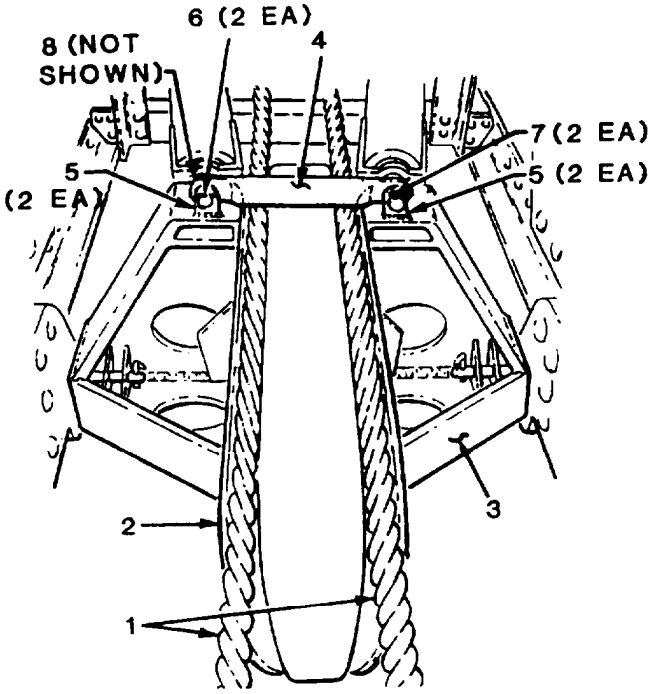

c. **Assembly of the MLC 70 Bridge** - CONT

(26) Cables, Cable Beam, and Hardware Connections.

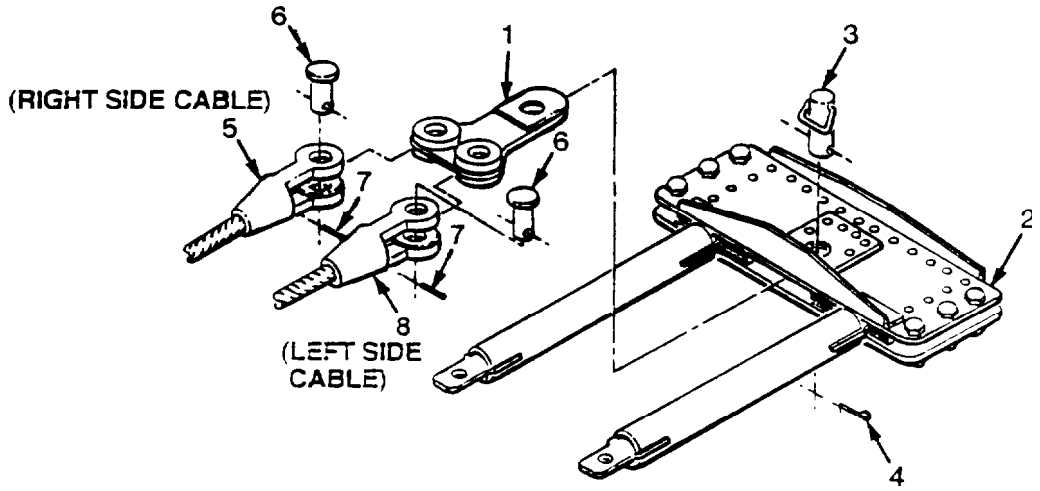

(a) Align equalizer plate (1) with center hole of cable beam (2). Insert pin (3) through equalizer plate and cable beam with handle to top as shown. Insert cotter key (4) through pin (3). Place equalizer plate (1) between flanges of scissoring cable connectors (5). Align holes in both.

(b) Install two quadrant cable retaining pins (6) through scissoring cables (5) and equalizer plate (1).

(c) Install two cotter keys (7) through retaining pins (6) securing assembly. Flare ends of cotter keys (7) to reduce the chance of loss.

(27) Tie Rods, Nuts, Washers, and Ramp Spacers.

(a) Install one flat washer (2) and one nut (1) on end of threaded rod (3). Slide threaded rod (3) through either end of tie rod housing (4) or (5).

(b) Install ramp spacer (6) before installing end of threaded rod (3) through center area of housing as shown.

(c) Install second flat washer (2) and nut (1) on exposed end of threaded rod (3).

(d) Tighten two nuts (1).

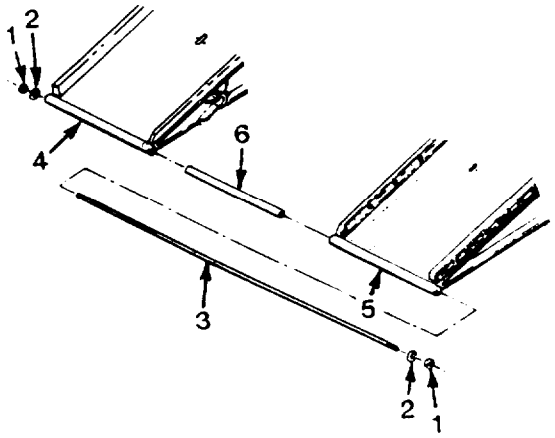

c. Assembly of the MLC 70 Bridge - CONT

(28) Installation of Flag Assembly.

(a) Install the flag assembly (1) on the rear transverse brace (2) using four bolts (3) and four nuts (4).

(b) Tighten nuts (4).

(c) Repeat steps (a) and (b) for the flag assembly (1) located on opposite side rear transverse brace.

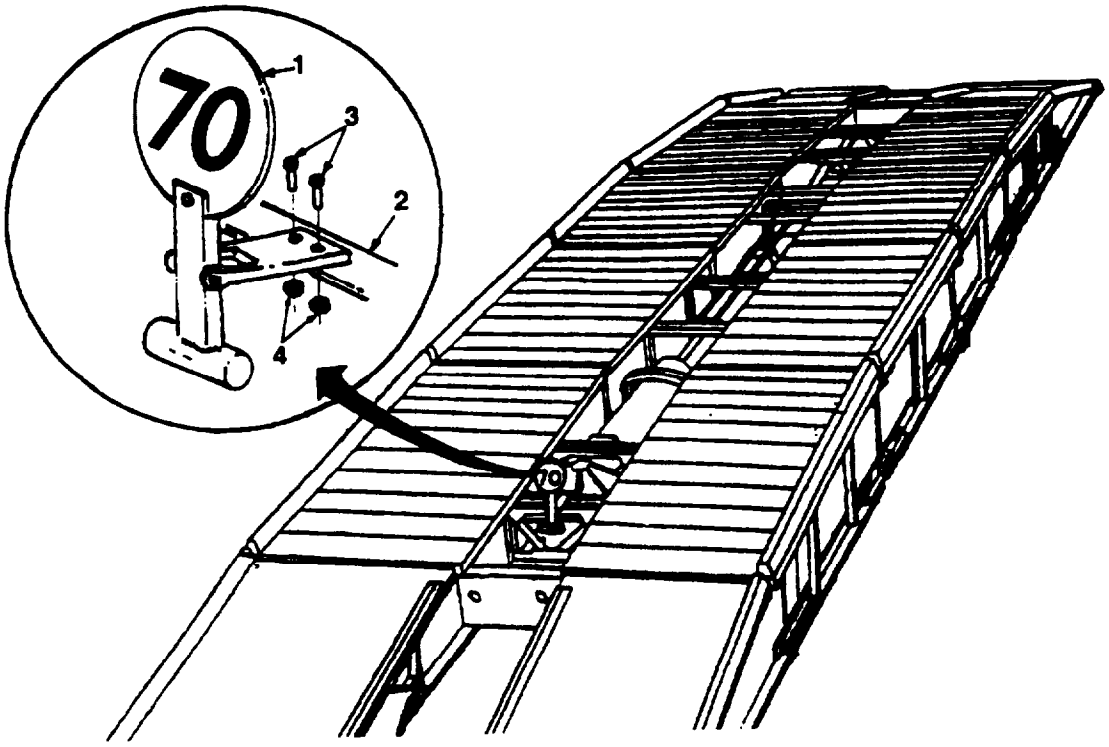

2-6. DISASSEMBLY OF MLC 70. Disassembly of the MLC 70 will be done in the reverse order of assembly (Paragraph 2-5).

2-7. INITIAL ADJUSTMENTS, DAILY CHECKS, AND SELF TEST. Daily checks are listed in PMCS (Table 2-2).

2-8. OPERATING PROCEDURES.

NOTE

The following launch and retrieval procedures are for use by maintenance personnel only when testing newly assembled or repaired bridge assemblies. Refer to Operator's Manual, TM 5-5420-226-10 for operating instructions for the M48A5, or TM 5-5420-202-10 for the M60.

a. Launching.

(1) Checks and Preparations. Prior to launching perform the following:

(a) Perform PMCS "Daily" and "Before" checks.

(b) Ensure all hydraulic bleed valves are closed.

(c) Ensure locking pins (located on outrigger) are fully extended.

(d) Remove any dirt or debris that could affect the hydraulic connections.

(e) Ensure no foreign matter has collected or lodged in the bridge structure.

(f) Survey the launching site. Ensure firm supportive base exists for launching.

(g) Ensure uphill, downhill angle does not exceed 15% and side slope (cant) does not exceed 8%.

(h) Ensure enough clearance exists for lifting and extension. Far-shore placement site is at same angle as near-shore launching site to avoid twisting and damage to the bridge.

(i) Avoid launching on stumps, large rocks, or other irregular shore (dips, etc.).

(j) Survey area for overhead power lines or other aerial obstacles.

(k) If launching in low or marshy areas, give consideration to other launching sites.

(1) Contact engineering personnel if fill or site improvement is required.

(2) Transporting and Positioning. The bridge is transported to the selected launching site in the folded position on top of the transporting launcher. Perform the following procedures for launching setup.

(a) Start the launcher.

(b) Position the launcher so the outrigger will touch the ground about 5 ft from the gap to be crossed.

a. Launching - CONT

(c) Lock the vehicle brakes, place launcher in neutral, lift up on "clutch" lever as far as it will travel to engage the power take-off. Engine RPM shall be at no more than 1000 RPM.

(d) Set the launcher engine at 1800 RPM to develop required operating fluid flow.

NOTE

Refer to paragraph 2-1, Use of Controls and Indicators, for the operation of levers.

The launcher has an open center type directional control valve, no pressure will be in the hydraulic control system until an operating valve is opened.

(3) With the engine set at operating RPM, lift up on the overhead cylinder lever #l. The holddown cylinder pins will retract and the tiedown chains will be released. The bridge will begin to rise off the bridge seat.

(4) Maintain pressure on lever #l until the bridge has raised to the upright position and rotated slightly past vertical. The outrigger should reach the ground at this point.

(5) Release the launcher brakes slowly while keeping pressure on the brake pedal. Let the launcher slowly crawl forward until the outrigger boom pads firmly contact the launcher. Return lever #1 to the neutral position.

(6) Depress the brake pedal and move the shifting lever to "P" to engage the parking brake.

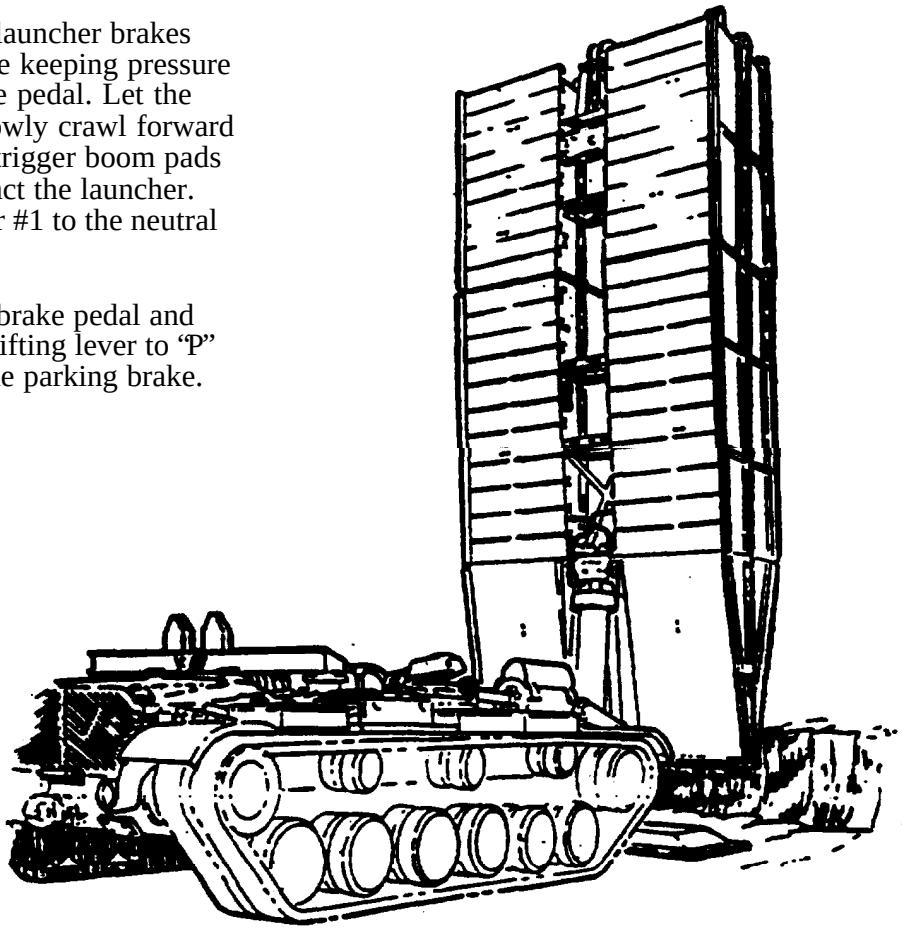

a. Launching - CONT

NOTE

The tongue cylinder lever #2 and the scissor cylinder lever #3 must be operated at the same time in order to launch the bridge.

(7) Lift up on lever #2. Bridge will begin to lower to the ground. At the same time, lift up on lever #3 and the bridge will begin to open (expand).

(8) Operate lever #3 along with lever #2. It may be necessary for the scissor cylinder to be operated intermittently rather than steadily, in order to keep the far end of the bridge as low as possible and fully open at the end of the tongue cylinder operation. While it is being extended, the far-shore end of the bridge should be kept about 2 ft off the ground When bridge is fully extended, release lever #3.

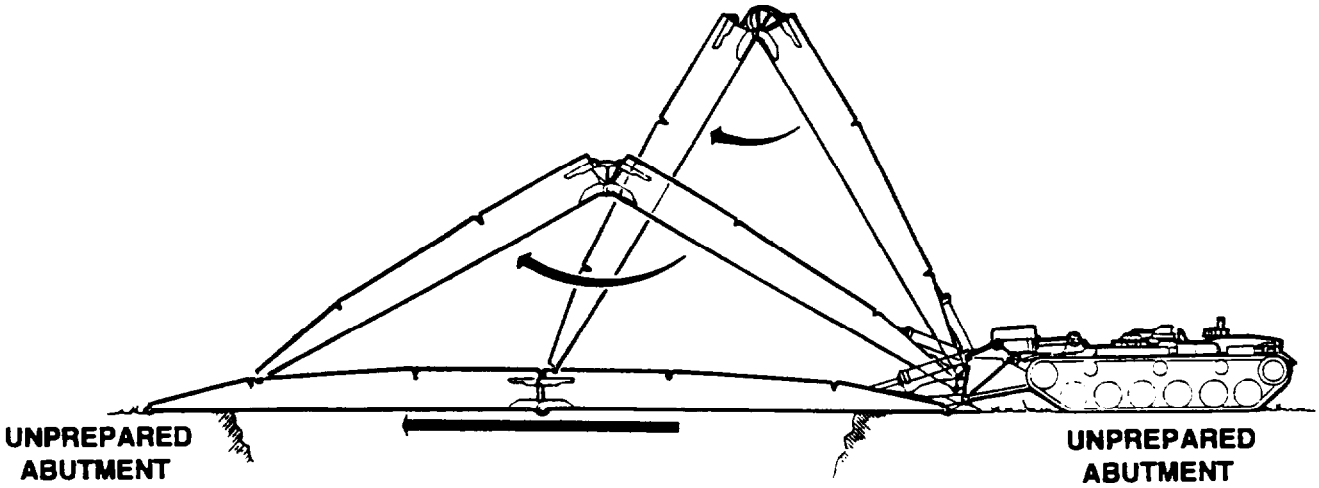

(9) After the bridge has made contact on both sides of the launch site, release the tongue cylinder lever #2. Push down on lever #3 until scissor cylinder is released. Be sure that at least 18 in overhang is present with prepared abutments or at least 36 in. overhang on each end is present without prepared abutments.

(10) Lift up on the locking cylinder lever #4 to retract the locking plugs. Return lever #4 to the neutral position. Return engine RPM to idle. Disengage clutch.

(11) Return engine RPM to idle. Push hydraulic pump clutch lever all the way down to disengage the pump.

(12) Cycle levers #2 and #3 to reduce hydraulic pressure in the system. Allow the bridge to relax and settle firmly on the ground or abutments. Cycling the controls equalizes pressure within the hydraulic system reducing the possibility the system will have to be bled before hooking up the quick-disconnects for retrieving.

a. Launching - CONT

NOTE

If problems exist performing step (13) below, go to step (14).

(13) Cycle all five hydraulic control levers #1 thru #5 to reduce all existing hydraulic system pressure. Bridge hydraulic fluid supply line quick-disconnects will automatically disconnect from bridge. Back launcher away from bridge no farther than 18 in. Bridge is now laid. Refer to step (19).

CAUTION

Caution must be used to avoid the release of the bridge when in other than a laid position. The ejection cylinder pushes the tongue from the bridge releasing the bridge. As a safety measure, the bridge ejection cylinder will not operate independently, but must be operated in conjunction with the locking cylinder control.

(14) If the launcher does not release from the bridge easily, the ejection cylinder will have to be used. Engage the hydraulic clutch pump lever. Lift up on lever #4 and hold in position.

(15) With the locking control lever still in the launching (up) position, lift the ejection cylinder lever #5 to the launching position and hold there until the launcher is pushed free of the bridge.

(16) To retract the ejection cylinder pins, lift the lever #4 and hold in the launching (up) position. At the same time, hold lever #5 in the down position until the ejection cylinder pins are retracted.

(17) After the launcher has been disengaged from the bridge, disengage clutch and perform step (15).

(18) Place launcher in neutral. Apply and lock brakes. Engage clutch. Raise RPM to 1800. Push down on levers #1 and #2. Outrigger will return to traveling position.

(19) Reduce RPM to idle. Disengage clutch, cycle levers #1 and #2 to reduce pressure. Back launcher away to allow traffic to proceed across bridge.

a. Launching - CONT

NOTE

The following launch and retrieval procedures are for use by maintenance personnel only when testing newly assembled or repaired bridge assemblies. Refer to Operator's Manual, TM 5-5420-226-10 for operating instructions for the M48A5, or TM 5-5420-202-10 for the M60.

b. Retrieval by Launcher. The launcher can retrieve the bridge from either the near-shore end (the end with the scissor cylinder) or the far-shore end.

Prior to retrieval, the following checks and preparations shall be performed:

- Ensure the tongue pintles (1) line up with the holes in the launching diaphragm (2). See illustration below.

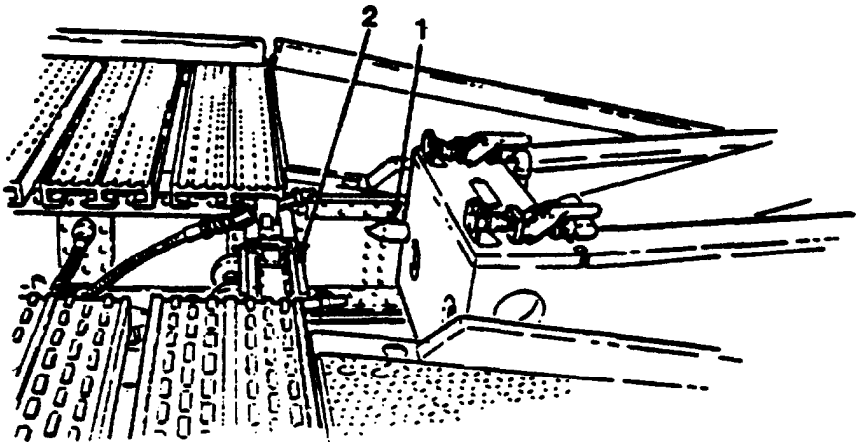

- Check the bridge for impacting (pushed into the terrain by user traffic). If impacted, refer to paragraph 2-9e.
- Ensure the quick-disconnects are cleared of any foreign matter.
- Ensure no foreign matter has collected or lodged in the bridge structure.
- Ensure uphill, downhill angle does not exceed 15% and side slope (cant) does not exceed 8%. If either parameter is exceeded, contact engineering personnel for aid.
- Ensure enough clearance exists for lifting and retraction.
- Survey area for overhead power lines or other aerial obstacles.
- Inspect the bridge for damage and make necessary repairs to allow retrieval. If further repairs are required, perform those repairs prior to re-use. Perform repairs in accordance with Chapter 3.
- If bridge was crossed under "risk conditions" as defined in paragraph 1-8, bridge shall be inspected by a bridge engineering officer prior to bridge being returned to a serviceable condition.

b. Retrieval by Launcher - CONT

(1) Move the launcher into position by following hand signals from a dismounted crew member.

WARNING

Bridge may shift during connecting procedure. Do not stand on ground, stand on the bridge deck when launcher is mating to diaphragm.

NOTE

Refer to paragraph 2-1, Controls and Indicators, for the operation of levers.

(2) When the launcher is aligned with the bridge, engage the power takeoff clutch. Raise RPM to 1800. Use lever #1 to lower outrigger. Use lever #2 to raise or lower the tongue to match holes in the diaphragm. Seat the pintles (1) fully in the diaphragm (2) of the bridge.

(3) Hold down lever #4 and extend the locking pins. Make a visual inspection to ensure that the locking pins are fully extended.

WARNING

FRH hydraulic fluid may contain Tricresyl Phosphate which, if taken internally, can cause paralysis. Hydraulic fluid may be absorbed through the skin. If hydraulic fluid gets on skin, thoroughly wash with soap and water as soon as possible.

(4) Disengage the clutch lever. Relieve the pressure in the hydraulic system by cycling (moving levers #1, #2, and #4 up and down).

NOTE

While connecting the scissor cylinder hydraulic system, make a visual inspection of the locking pins to ensure that they did not retract during step (4), when system pressure was relieved. If retraction of locking pins did occur, hold down on lever #4 during step (8) to relock locking pins before lifting bridge.

(5) Ensure the manual hydraulic bleed valves are closed by rotating counter-clockwise until hand-tight. Refer to paragraph 2-3c(27)(a).

(6) Connect the hydraulic connection by guiding the male connector (1) to the socket (2). Pull forward on the control handle (3) on top of the tongue (4) and insert the coupling plug (male connector) (5) into the quick-release coupling socket (6). Visually inspect the quick-release coupling to be sure the connectors (1) are completely engaged.

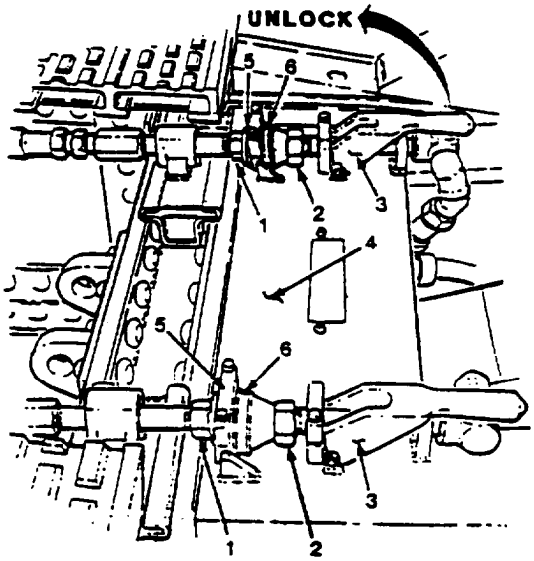

b. Retrieval by Launcher - CONT

(7) If the quick-release couplings cannot be engaged, the scissor cylinder must be bled. Manual bleeding valves are located on each end of the scissor cylinder for this purpose. Open the valves just long enough to relieve the pressure. Close the valves and be sure they are tight.

(8) Engage clutch. Raise RPM to 1800. Lift up on lever #3 to tighten scissor cylinder and cables. Hold down lever #2 to the retrieving position. The bridge will begin to rise from the far-shore.

(9) When the far-shore ramp is about 2 ft off the far-shore, hold down lever #3 and begin retrieving the bridge.

(10) Operate lever #3 intermittently to keep the far-shore end as low as possible (no higher than 6 ft). When the scissor cylinder is fully closed, release lever #3.

(11) When the bridge is in its full vertical position, release lever #2.

(12) Apply the launcher brakes and hold the vehicle in position, Hold down on lever #1 . The bridge will begin to lower to the bridge seat.

(13) Slightly release the brakes during the time the bridge is being tilted back from the vertical position until the outrigger leaves the ground. Lower the bridge to the bridge seat.

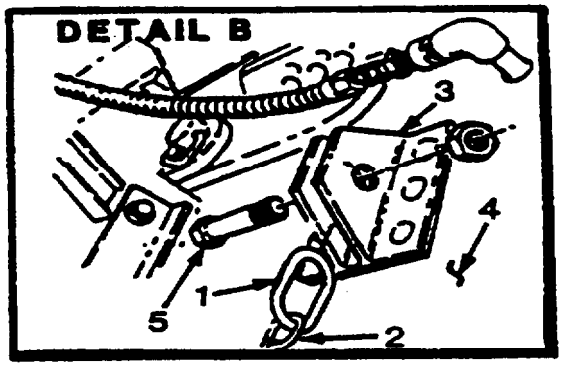

(14) Place the chain end (1) of the tiedown chains (2) in the slot of the clip angle (3) located on the bridge (4). Insert bolt (5) through the clip angle (3) securing the end of the chain (1).

(15) Thread nut (6) on bolt (5) and hand-tighten until snug.

(16) Insert retainer (7) through hole in bolt (5).

(17) Repeat procedure for second tiedown chain (1).

(17.1) Cross the tiedown chains in an “X” pattern when installing to the launcher.

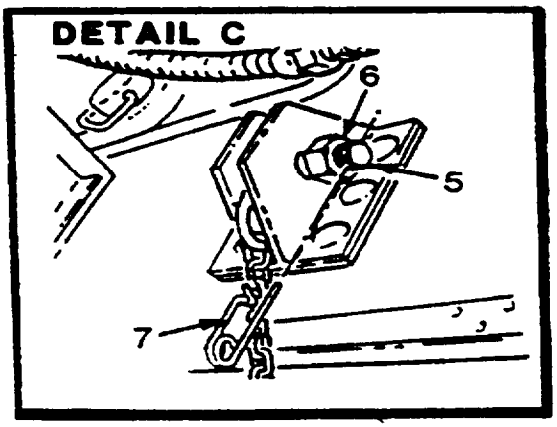

b. Retrieval by Launcher - CONT

(18) Retract the holdown pin (8) by lifting up on overhead cylinder lever #1 for about 30 seconds.

WARNING

Due to the noise of the engine, communication between the dismounted crew member and the operator will be strained. Ensure that a visible hand signal is used and the meaning of such hand signal is understood. Early operation of the holddown cylinder could result in the hands or fingers of the crew member being severely injured or severed. Take all necessary precautions to avoid injury.

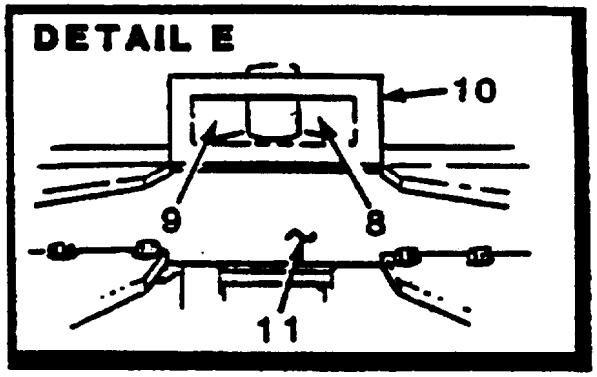

(19) Place both tiedown chain turnbuckle eyes in the socket (9) of the holddown cylinder bracket (10) located on the bridge seat (11).

(20) Extend the holddown pin (8) by holding down on lever #1 until the tumbuckle eyes are securely pinned in the holddown cylinder socket (9).

(21) Reduce engine RPM to idle. Disengage the power takeoff clutch and cycle the control levers up and down to the launching and retrieving positions two or three times to relieve the pressure in all hydraulic lines.

(22) Tighten the tumbuckles one or two turns more than hand-tight. The bridge is now ready to be transported.

Section IV. OPERATIONS UNDER UNUSUAL CONDITIONS

2-9. LAUNCH, RETRIEVAL, AND RECOVERY OPERATIONS.

This paragraph Covers:

a. Launching on a Slope
b. Retrieving on a Slope
c. Launching in Wetlands or Marshy Areas
d. Retrieving in Wetlands or Marshy Areas
e. Recovery/Retrieval of an Impacted Bridge
f. Recovery by Other than a Launcher

a. Launching on a Slope.

This Task Covers: Launching

EQUIPMENT CONDITIONS: Serviceable

PERSONNEL: Two

(1) Precautions must be taken when launching on slope. The following precautions shall be adhered to:

(a) The bridge, when lifted from the launcher, exerts leveraged forces on the launcher. The higher the lift, the greater the forces. When the bridge is raised to the vertical position, the forces are at the maximum point. If the bridge and launcher maximum launching angles are not within the guidelines (see FIGURE 1-3) the bridge may cause the launcher to turn over resulting in serious damage to the bridge, the launcher, and serious injury or death to the crew.

(b) When launching on a slope, either up or down a hill or on the side of a hill, make sure the launching will occur within the range specified in Chapter 1 and shown in FIGURE 1-3. Do not, under any circumstances, attempt to launch a bridge on the side of a hill with greater than an 8% side slope on an uphill or downhill grade of greater than 15%.

(2) If an attempt to launch on an uphill or downhill grade or a side slope has resulted in other than normal launch position (launcher and bridge appear to tilt more than allowed due to soft footing, slippage, etc.), immediately stop operations.

(3) If bridge is past highest vertical position and is on its way down, make a decision whether to continue the launching operation. If bridge has not yet reached its highest point, stop the current operation and return the bridge either to the ground or the bridge seat on the launcher.

a. Launching on a Slope - CONT

(4) If it has been determined that the continued operation to launch will result in the launcher turning over, sliding in a ravine, etc., immediately shut down the engine and leave the launcher. Stay clear of the launcher and bridge. Seek engineering assistance.

WARNING

The bridge and the launcher are very heavy. You can be crushed by the weight. Always wear your helmet when operating the bridge. If the bridge starts to turn over, DO NOT TRY TO LEAVE THE VEHICLE. Stay inside and brace your position with your hands and feet. Do not have fingers or hands in the area of the turret cover. If the bridge tilts to the extent the launcher turns over, immediately kill the engine, abandon the launcher, and remove injured personnel to a safe distance.

(5) Refer to paragraph 2-8a for procedures to launch the bridge.

h. Retrieving on a slope.

This Task Covers:	Retrieving
EQUIPMENT CONDITIONS:	Serviceable
PERSONNEL:	Two

(1) Precautions must be taken when retrieving on a slope. The following precautions shall be adhered to:

(a) The bridge, when lifted from the ground, exerts leveraged forces on the launcher. The higher the lift, the greater the forces. When the bridge is raised to the vertical position, the forces are at the maximum point. If the bridge and launcher maximum retrieving angle are not within the guidelines (see FIGURE 1-3), the bridge may cause the launcher to turn over resulting in serious damage to the bridge, the launcher, and serious injury or death to the crew.

(b) When retrieving on a slope, either up or down a hill or on the side of a hill, make sure the retrieving will occur within the range specified in Chapter 1 and shown in FIGURE 1-3. Do not, at any time, try to retrieve a bridge on the side of a hill with greater than an 8% side slope or a 15% or greater uphill or downhill grade.

(2) If an attempt to retrieve on an uphill or downhill grade or a side slope has resulted in other than a normal retrieve position (launcher and bridge appear to tilt more than allowed due to soft footing, slippage, etc.), immediately cease operations.

(3) If bridge is past highest vertical position and is on its way down, consider continuing the retrieval operation. If bridge has not yet reached its highest point, cease the current operation and return the bridge either to the ground or the bridge seat on the launcher.

(4) If it has been determined that the continued operation to retrieve will result in the launcher turning over, sliding in a ravine, etc., immediately shut down the engine and abandon the launcher. Stay clear of the launcher and bridge. Request engineering assistance.

b. Retrieving on a slope - CONT

(5) Do not, at any time, continue an operation if any possibility exists of the launcher turning over or there is evidence of continued tilting, slippage, or other hazardous actions.

WARNING

The bridge and the launcher are very heavy. You can be crushed by the weight. Always wear your helmet when operating the bridge. If the bridge begins to turn over, DO NOT TRY TO LEAVE THE VEHICLE. Stay inside and brace your position with your hands and feet. Do not have fingers or hands in the area of the turret cover. If the bridge tilts to the extent the launcher turns over, immediately kill the engine, leave the launcher, and remove injured personnel to a safe distance.

(6) Refer to paragraph 2-8b for procedures to retrieve the bridge.

c. Launching in Wetlands or Marshy Areas.

This Task Covers:	Launching
EQUIPMENT CONDITIONS:	Serviceable
PERSONNEL:	Two

(1) Launching in wetlands or low marshy areas presents many problems. First, consideration should be given to a second site selection that offers higher, dryer ground. If this is not possible, then locate the best possible launching site in the area. The following criteria shall be met:

(a) A firm, supportive base must exist for the launcher to safely launch the bridge.

(b) A firm, supportive base must exist for both ends of the bridge. If this is not present at the selected launching site, then site preparation must be done. This may require hauling in dryer, more supportive dirt, metal grid supports, rock, sand, or any other material that will improve the site's ability to handle traffic.

(c) The near shore and far shore touchdown areas must be able to support the continuing weight of user traffic. The amount of traffic, the weight, and the length of use of the site must be considered and properly planned for.

(d) When suitable firm, supportive base does not exist on either the near-shore or far-shore bank, then the banks will require bulkheads. Attempt to locate a new site (if possible) rather than spend considerable time upgrading this site.

(e) The approach to the bridge should be on the higher ground, when possible. Low areas should be filled with any available fill that will serve the purpose.

(f) The departure route must be capable of supporting the user traffic. Some fill may be required.

c. Launching in Wetlands or Marshy Areas - CONT

NOTE

The maximum usable span of the bridge is 60 ft. This takes into account the overall length of the bridge (63 ft with a minimum of 1-1/2 ft overhang on each bank if bank conditions permit and abutments are present. If a suitable firm bank is not present, then a minimum of 3 ft overhang on each bank is required, reducing the overall usable span to 57 ft).

(2) After the above considerations have been made, prepare the site. Contact engineers (if required) for site preparation. The illustration below shows a properly prepared launching site.

WARNING

If the bridge tilts to the extent that the launcher turns over, immediately abandon the launcher and move injured personnel to a safe area.

(3) If an attempt to launch on an uphill or downhill grade or a side slope has resulted in other than a normal launch position (launcher and bridge appear to tilt more than allowed due to soft footing, slippage, etc.) immediately stop operations.

(4) If bridge is past highest vertical position and is on its way down, make a decision whether to continue the launching operation. If bridge has not reached its highest point, stop the current operation and return the bridge either to the ground or the bridge seat on the launcher.

(5) Do not, at any time, continue an operation if any chance exists of the launcher turning over or if there is evidence of continued tilting, slippage, or other hazardous actions.

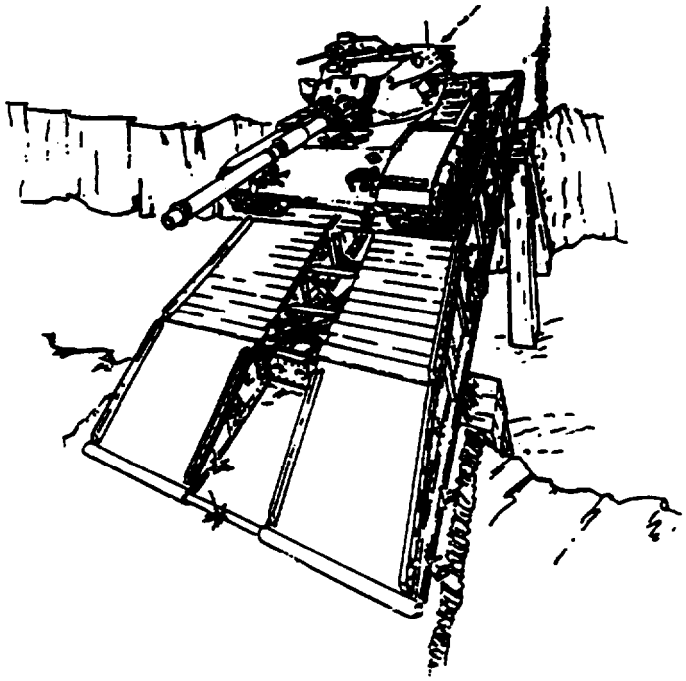

c. Launching in Wetlands or Marshy Areas - CONT

(6) If it has been determined that the continued operation either to launch or retrieve will result in the launcher turning over, sliding in a ravine, etc., immediately shut down the engine and leave the launcher and bridge. Stay clear of the launcher and bridge. Request engineering aid.

(7) Refer to paragraph 2-8a for launching procedures.

d. Retrieving in Wetlands or Marshy Areas.

This Task Covers:	Retrieving
EQUIPMENT CONDITIONS:	Serviceable
PERSONNEL:	Two

(1) Prior to starting retrieval operations, inspect the launch site and assess what is required to remove the bridge.

(a) If bridge is impacted in the mud due to user traffic, refer to paragraph 2-9e.

(b) Inspect for damage using the Operator Preventative Maintenance Checks and Services (PMCS) as a guide.

(c) Request engineering assistance, if required.

(d) Request additional equipment, if required.

(2) Ensure all necessary work has been performed before attempting to recover/retrieve the bridge. If bridge cannot be recovered with a launcher, refer to paragraph 2-9f.

(3) After required site work has been done, retrieve the bridge in accordance with procedures in paragraph 2-9b.

e. Recovery/ Retrieval of Impacted Bridge.

This Task Covers:	Recovery and Retrieval
EQUIPMENT CONDITIONS:	Serviceable
TOOLS/EQUIPMENT:	General Mechanics Tool Box SC 5180-90-N26 Hand Tools (shovels, picks, mattocks) Hydraulic Jack, 12 Ton Minimum Lift Wire rope, Stranded of Sufficient Lengths Wire Rope Connectors and Hardware Launcher Lifting Device, 15 Ton Minimum Lift Towing Vehicle as Required for Task
MATERIALS/PARTS:	Bracing Cribbing Metal support Panels Shoring
PERSONNEL:	Four

(1) Remove the dirt, mud, or debris from each end of the impacted bridge.

(2) Assemble materials/parts for support of bridge after it is elevated.

(3) Remove enough dirt to place a hydraulic jack under the bottom support beam of the bridge. Be sure the base of the jack is resting on a secure, firm base.

(4) Place a small piece of wood (1) between the jack (2) and the support beam (3) to aid in distributing the lifting force and to reduce the chance of the jack slipping.

(5) If only one jack is available, assemble enough blocking (4) to block one side, then the other, as the bridge is lifted.

e. Recovery/ Retrieval of Impacted Bridge - CONT

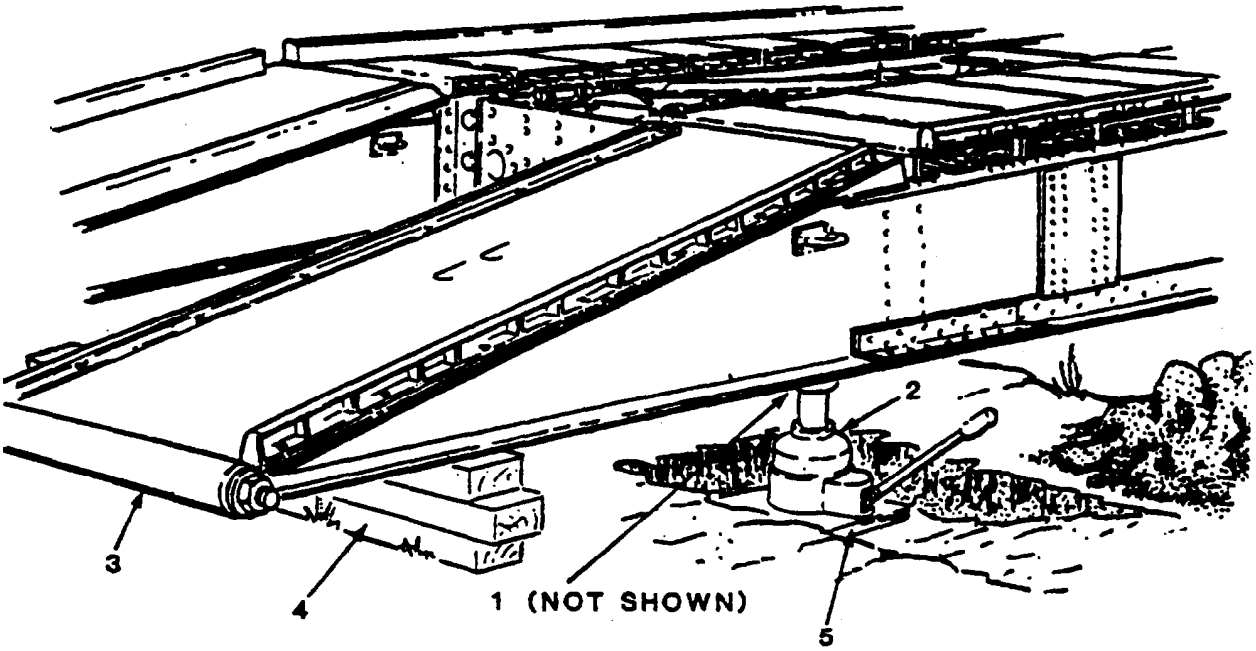

WARNING

Working with a jack is dangerous. The jack could slip and exit the work area with enough force to cause injury or death to personnel. The bridge could sideslip and fall. Personnel should stay clear and out from under the lifted area of the bridge at all times.

(6) Slowly lift the bridge while taking care to watch the position of the jack (2).

(7) When working with one jack, shore up the lifted side with blocking before moving the jack to lift the opposite side.

(8) Place the jack (2) in the same position on the opposite side of the bridge. Be sure that the base of the jack is resting on a secure, firm base such as blocking.

(9) Slowly lift the opposite side of the bridge. Lift the bridge no higher than required for the launcher to make connection.

(10) Secure the bridge at this height with blocking (4).

(11) If bridge is serviceable and is to be loaded on a launcher, refer to paragraph 2-8b.

(12) If bridge is not serviceable and cannot be repaired at site, recover using procedures outlined in paragraph 2-9f.

f. Recovery by Other Than a Launcher.

CAUTION

When recovering the bridge using other than a launcher, damage to the bridge could occur. Care must be taken at all times to ensure that damage is kept to a minimum. Prior to taking any action, study the situation and think through some of the recovery choices. Avoid attaching cables or hooks to components that may not withstand the forces exerted on them. Have a Bridge Officer inspect the situation and decide the best method of recovery. Place wood or other absorbing materials between cables and the components of the bridge to reduce damage. Brief all personnel on the recovery method chosen and inform each one as to his job in the effort.

This Task Covers:	Recovery Using Towing Vehicle and Lifting Device.
EQUIPMENT CONDITIONS:	Serviceable
TOOLS/EQUIPMENT:	General Mechanics Tool Box SC 5180-90-N26 Hand Tools (shovels, picks, mattocks) Hydraulic Jack, 12 Ton Minimum Lift Wire rope, Stranded of Sufficient Lengths Wire Rope Connectors and Hardware Launcher Lifting Device, 15 Ton Minimum Lift Towing Vehicle as Required for Task
MATERIALS/PARTS:	Bracing Cribbing Metal support Panels Shoring Timbers for Blocking
PERSONNEL:	Four

f. Recovery by Other Than a Launcher - CONT

NOTE

These procedures should be used only when it is necessary to recover a bridge using a lifting device and towing vehicle from a gap with high vertical sides or one with missing or blown-out spans. After recovery method has been determined, refer to the appropriate procedures.

(1) Recovery Using a Towing Vehicle.

(a) If bridge is impacted, refer to paragraph 2-9e.

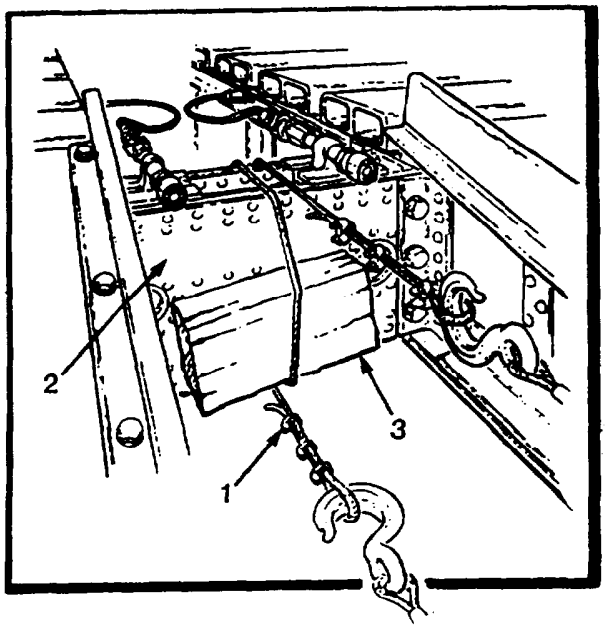

Near-Shore

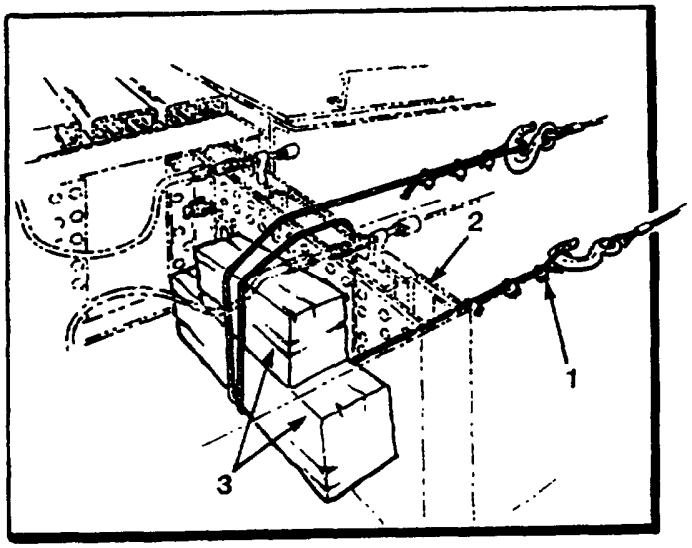

Far-Shore

(b) After bridge has been raised to a suitable working height, attach cables (1) to the diaphragm (2). Ensure the cables are at least 1/2 in. stranded steel with a rated strength of no less than 23,000 pounds. Loop at least two times for additional strength.

(c) Place protective wood blocking (3) as shown to reduce metal to metal contact of the cables on the diaphragm. Remove the hydraulic quick disconnect hoses so they are not damaged.

f. Recovery by Other Than a Launcher - CONT

(d) Place skids (1) and/or timbers (2) under bridge (3).

(e) Ensure all connections are secure.

(f) Clear personnel from task area. The bridge prior to recovery is shown below.

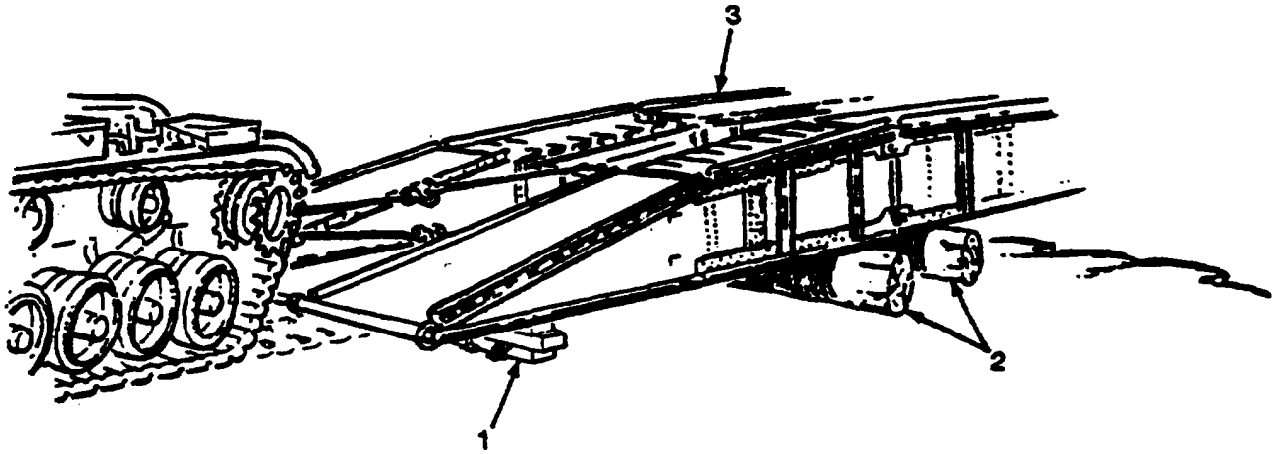

WARNING

Cables under stain may break. The bridge may shift and fall from its supports or a component may fail causing the release of the towing cable. Either of these can cause injury or death. Stay clear of the immediate area when the bridge is being towed.

(g) Remove all large rocks or other items that may slow down the recovery process and damage the undercarriage of the bridge. Cease operations any time something goes wrong.

(h) The bridge will rise on the near-bank (1) when the far-bank (2) begins to drop off the bank or abutments as shown. This is to be expected. Pull the bridge slowly.

(i) Watch the far-bank (2) and expect the near-bank (1) end of the bridge (3) to rise rapidly.

(j) At this point, place another timber or skid (4) under the bridge, if needed. During recovery, the far end of the bridge (5) will drop until the slack in the scissoring cables (not shown) is taken up.

(k) Be sure the bridge will drop on the timbers (4) after the center of the bridge reaches the near bank. Stop the recovery at any time and reposition the timbers or skids if required.

f. Recovery by Other Than a Launcher - CONT

(1) Tow the bridge to a distance that will allow access to both ends of the bridge for inspection and repair. Perform any repairs needed IAW repair procedures found in Chapter 3. Load the bridge on a launcher or transport IAW procedures in paragraph 2-10a(1).

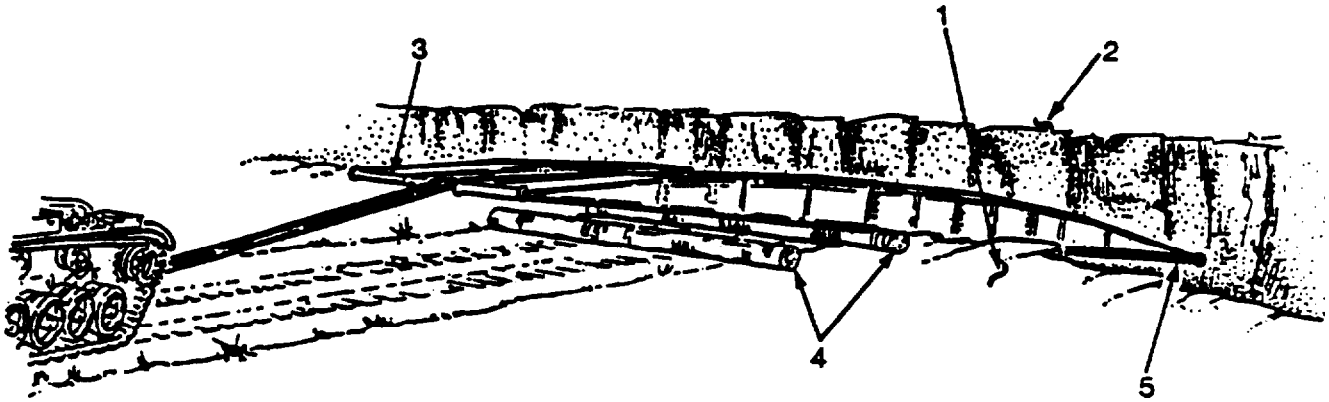

(2) Recovery With a Crane and Towing Vehicle.

WARNING

The following recovery technique is dangerous and should only be attempted when time is a factor and engineering support is not available. The lifting device could tilt resulting in the bridge being dropped into the gully, ravine, or stream. This could pull the towing vehicle or the lifting device to the edge and possibly into the gully, ravine, or stream. Personnel operating the equipment will be in danger. CEASE OPERATIONS IMMEDIATELY.

CAUTION

These procedures should be used as a last resort and only when the bridge has been launched over a deep gully, stream, or river, and recovery by other means is not feasible. Damage to the bridge could result.

(a) Inspect all cables, connectors, bolts, etc., for suitability for the task. Replace all components that appear defective or show signs of wear, strain, or damage.

(b) Use 1/2 in. diameter wire rope or larger with no less than 23,000 pounds lifting capacity. Place a cable around the launching diaphragm with protective timbers between the wire rope and diaphragm as shown in paragraph 2-9f(1). Attach to the towing vehicle. Secure all connections.

f. Recovery by Other Than a Launcher - CONT

(c) Distribute the load to protect the cable (1) and the diaphragm (2).

NOTE

Be sure lifting device exceeds the lifting requirements of the task. Refer to operational data plate of the lifting device for lifting limitations and angles. Do not exceed these specifications. It will be necessary for the lifting device to increase the boom angle during the recovery operation. This will reduce the lifting capacity of the lifting device. Check the lifting device performance chart to ensure the lifting device remains within its area of operation at all times.

(d) Position the lifting device on the far-shore for recovery procedures as shown.

(e) Attach lifting sling (3) to the diaphragm (2) of bridge (4). Place protective timbers, or wood blocks (5) between the cables and the diaphragm. Avoid metal to metal contact, if at all possible. Inspect all lifting components for damage, evidence of stress and strain, and breaks that would reduce their lifting strength

CAUTION

If a master link is used, it must be rated at a capacity greater than the weight of the bridge PLUS allowances must be made for the increased forces present during the recovery.

(f) Position the lifting device facing, centered with the boom pointed directly toward the bridge and pointing down the recovery path.

WARNING

Stop operations any time is appears something is going wrong. Abandon any vehicle or equipment that shows indications of turning over or slipping down a bank. Return to that equipment and task only after the situation has been stabilized.

CAUTION

Consult the operational data plate and lifting capacity schedules displayed on the lifting device or in its operation manuals. Ensure the boom angle and the cable arrangement (single, double, or triple strand) is accurately figured into the lifting capacity of the lifting device. The boom height when combined with the extended lifting device cables must be able to offer lift to the end of the bridge no less than half the distance across the ravine, stream. etc.

NOTE

The force of towing vehicle will be felt as additional weight on the boom of the lifting device. No one piece of equipment must overpower the other. All equipment must work together for the successful completion of this task.

(g) Take up the slack in the cable on the near bank with the towing vehicle (6). Take up the slack on the lifting device cable (1).

f. Recovery by Other Than a Launcher - CONT

(h) Slowly begin to tow the bridge (4) forward and at the same time, maintain the height of the bridge. Release cable from the lifting device as the towing vehicle moves forward and away from the lifting device. Keep both cables taut at all times.

(i) Stop towing just prior to far bank end of bridge dropping off far bank. Study the situation, recheck all equipment for loose components, etc.

(j) Slowly pull the bridge forward with the towing vehicle. The near end of the bridge will rise off the ground when the far end slips off the supporting bank. Lengthen the lifting device cable and at the same time, decrease and/or extend the boom as required to keep the bridge in a level recovery posture.

(k) Continue to lengthen the lifting device cable (1) (as required) and decrease the boom angle (8) as need be.

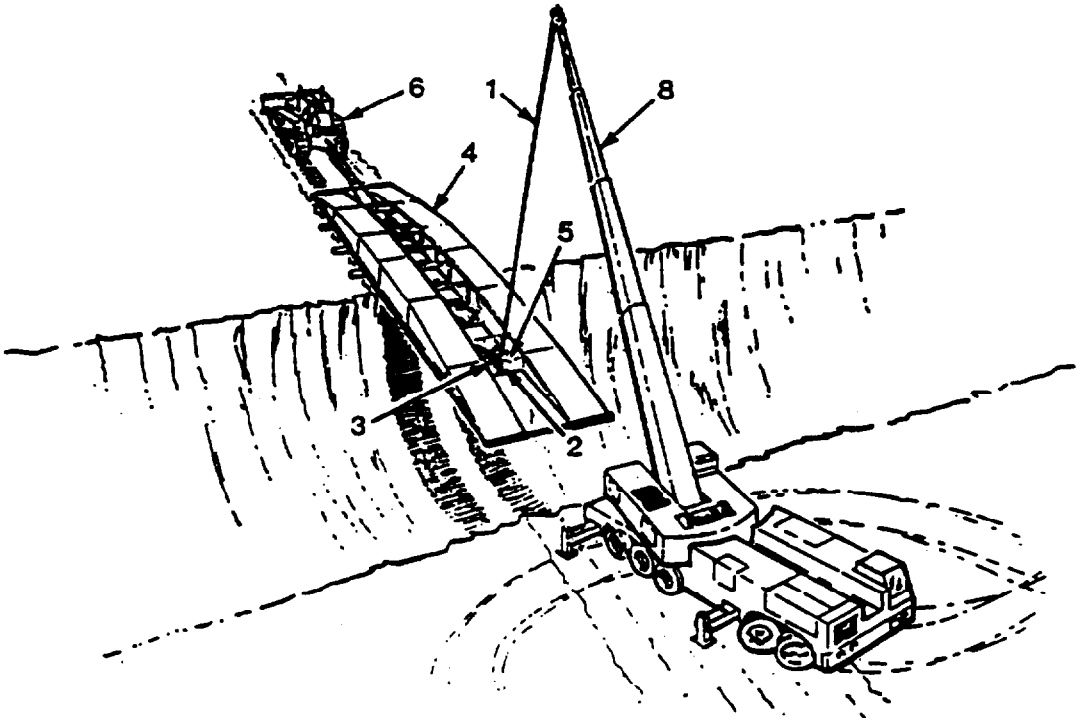

f. Recovery by Other Than a Launcher - CONT

(l) When the centerline of the bridge has reached the edge of the near bank, the weight of the bridge will drop on the timbers and skids (1). Maintain a tight pull on the bridge by the towing vehicle. Leave lifting device cable (2) connected to the bridge as a safety precaution. Allow sufficient cable slack in case bridge shifts or slides.

(m) Continue to pull the bridge forward on the timbers and skids until there is enough room to perform repairs.

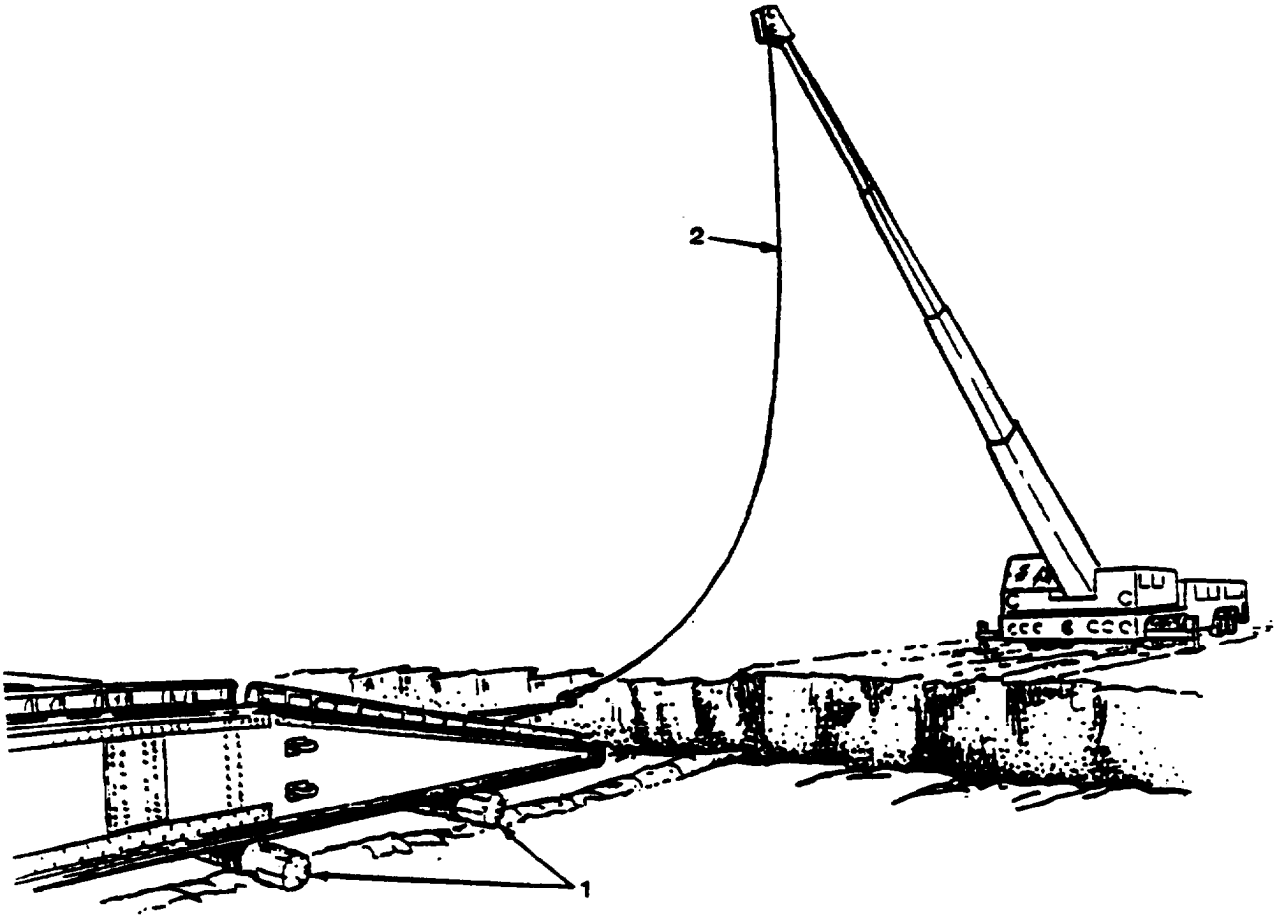

(n) Disconnect the tow cables from the diaphragm. Disconnect the lifting cables used by the lifting device.

(o) Inspect the bridge for damage IAW the PMCS.

(p) Make repairs as needed in accordance with Chapter 3. Determine mode of transportation and refer to paragraph 2-10 for loading and unloading procedures. Bridge must be inspected and repaired prior to bridge being placed in a serviceable condition.

2-10. LOADING AND UNLOADING OPERATIONS.

Both the Class 60 and Class 70 bridges have been equipped with proper side lifting points for the lift of the folded bridge by the attachment of a standard four-legged sling.

In addition, the individual quarter-sections of the Class 70 bridge can be lifted by attachment of a two-legged sling. The quarter-sections can be lifted either by the two outboard lift points or diagonally by attaching the sling to the outboard ramp-end lift point and the single inboard lift point (located where the second tiedown from the center hinge used to be).

- The Class 60 bridge's individual panels will continue to be lifted by the deck lift points. The Class 70 bridge will NOT be lifted at the deck points (the lift bars, will be removed).

- The lift points and sling attachments for the folded bridge (Class 60 and Class 70) and the individual sections (Class 70) are shown below.

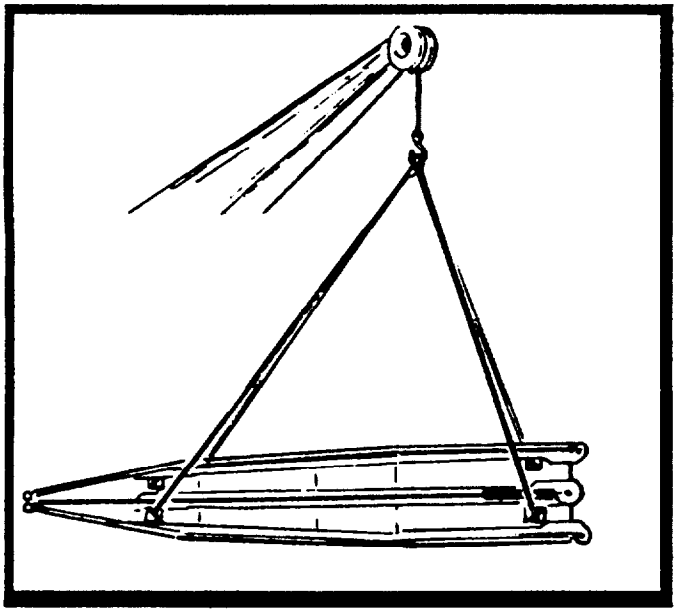

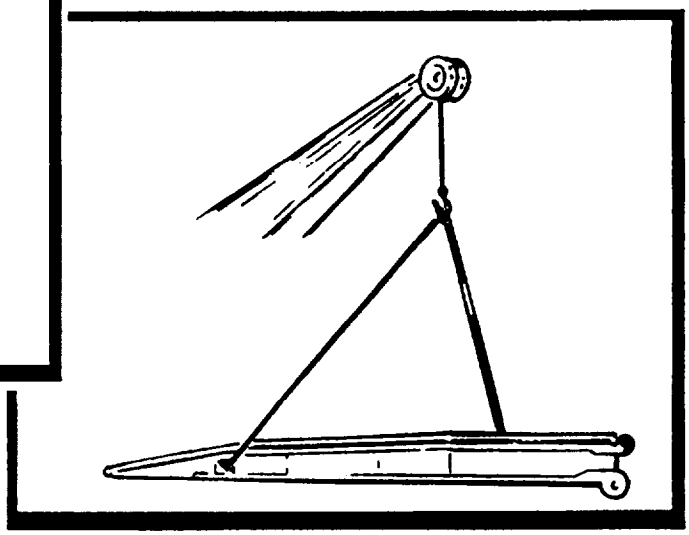

2-10. LOADING AND UNLOADING OPERATIONS - CONT

This Paragraph Covers:

a. Loading/unloading a launched bridge onto a Launcher.
b. Loading/unloading a scissored (folded) bridge onto a lowbed semitrailer (M172 or M172A1) with launcher using a dugout pit and bank arrangement.
c. Loading/unloading a scissored bridge onto a flatbed semitrailar (M871 or M872) with launcher using a dugout pit and bank arrangement.
d. Loading/unloading a scissored bridge onto a lowbed semitrailer (M172 or M172A1) with a launcher from an already launched bridge positioned on the ground as a base.
e. Loading/unloading a scissored bridge to/from a lowbed or flatbed semitrailer using forklifts (15-20 ton lift capacity).
f. Loading/unloading a scissored bridge to/from a lowbed or flatbed semitrailer using a crane (20-ton or higher capacity).
g. Transport of the AVLB bridge system (Class 60 or Class 70 bridges) for the purpose of air, rail, sea, and highway modes.

a. Loading/Unloading a Bridge to/from a Launcher.

This Task Covers:	(1) Loading (2) Unloading
EQUIPMENT CONDITIONS:	Serviceable
PERSONNEL	Two

a. Loading/Unloading a Bridge to/from a Launcher - CONT

NOTE

Refer to paragraph 2-1, Use of Controls and Indicators, for the operation of levers.

- The following launch and retrieval procedures are for use by maintenance personnel only when testing newly assembled or repaired bridge assemblies. Refer to Operator's Manual, TM 55420-226-10 for operating instructions for the M48A5, or TM 5-420-202-10 for the M60Al.

(1) Loading. (Refer to the illustration below).

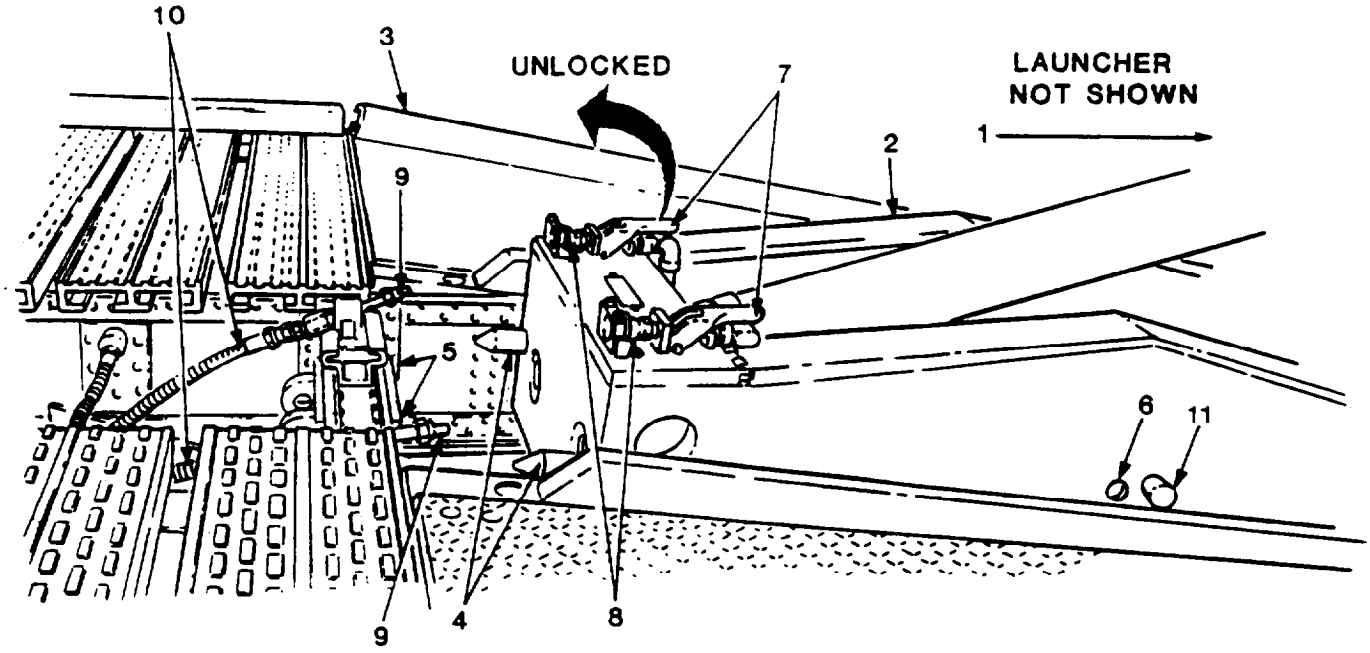

(a) Drive the launcher (1) to a point so the tongue (2) will align with the bridge (3).

(b) Align the tongue pintles (4) with the holes in the bridge's lifting diaphragm (5). Obtain this alignment by operating the tongue cylinder lever (lever #2) and the overhead cylinder lever (lever #1) on the hydraulic control panel (valve bank) in the launcher as required.

(c) Place the transmission shifter (lever #6) in first gear, "L" position. Move the launcher forward. Keep the pintles (4) in line until they are seated in the lifting diaphragm (5).

a. Loading/Unloading a Bridge to/from a Launcher - CONT

(d) Lock the locking plugs (6) by pushing down on locking cylinder lever (lever #4) on the valve bank. This secures the tongue cross pins (11) in the cross pin sockets (located on the inner surface of the ramps).

(e) Lift quick-disconnect locking lever (7) to the unlocked position. Inspect two female receptacles (8) and two male connectors (9) for dirt, sand, pebbles, etc., that would hamper the hydraulic connection. Clear if necessary.

NOTE

Near-shore hydraulic quick-disconnect lines must be crossed at the near-shore end. Near-shore is determined by the presence of the scissor cylinder in that half of the bridge.

(f) Connect two bridge hydraulic lines (10) to female tongue receptacles (8).

(g) Lower the outrigger pad to the ground. To retrieve the bridge, lift up on the tongue 6 to 8 inches by pushing down on the tongue cylinder control lever #2 while lowering the overhead cylinder by pushing down on the overhead cylinder lever #1 the same approximate distance. Repeat this operation until the base plate of the outrigger is fully seated on the ground.

(h) Push down on the scissor cylinder lever #3 at the same time while pushing down on the tongue cylinder lever #2. The bridge will lift from the surface (retract) and begin to scissor (close).

(i) Maintain pressure on levers #2 and #3 until the bridge is in a vertical position.

(j) Push down on the overhead cylinder lever #1 and lay the scissored bridge on the bridge seat of the launcher. Be sure the bridge is properly seated.

(k) Connect the holddown chains IAW paragraph 2-8b, steps (14) thru (22).

(1) Bridge is now ready for transport.

(2) Unloading. The bridge may be unloaded in two different configurations: extended flat (launched), or scissored. Paragraph (a) below covers an extended (flat) launch. Paragraph (b) covers launching in a scissored configuration.

(a) Extended Flat (launched).

1 Ensure that the “Before” PMCS has been completed (see Table 2-2, page 2-4).

2 Perform the launching procedures IAW paragraph 2-8a.

a. Loading/Unloading a Bridge to/from a Launcher - CONT

(b) Scissored (folded).

1 Ensure that the "Before" PMCS has been completed.

2 Raise the bridge to a near-vertical position, keeping the bridge less than 90° to the launcher.

3 Wrap ten feet of size 3/8 inch chain (1) around the tie-rods (2) at the ramp ends (3) of the bridge as shown below.

NOTE

Make five wraps of the chain around the tie-rods and place the hooks onto the loops of the chain in opposing direction so the chain will tighten keeping the ramp ends together as the bridge is lowered into position.

4 As an alternative method, use cable (wire rope) (1) and wrap around the tie-rod (2) of ramp ends (3).

5 Assemble the "U" bolt (4), ruddle (5) and the two nuts (6) as shown below.

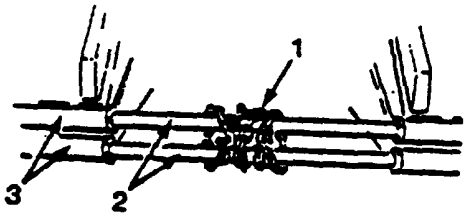

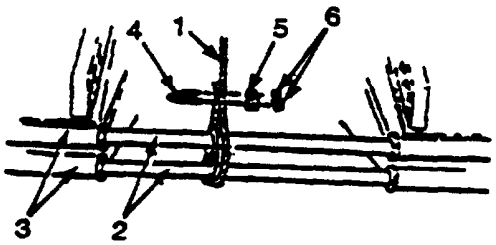

(c) Perform the launching sequence IAW paragraph 2-8a.

b. Loading/Unloading Scissored Bridge to/from a Lowbed Semitrailer (M172 or M172A1).

This Task Covers:	(1) Loading (2) Unloading
EQUIPMENT CONDITIONS:	Serviceable
TOOLS/EQUIPMENT:	General Mechanics Tool Box, SC 5180-90-N26
MATERIALS:	Timbers, one 4 x 4 in. x 10 ft. (between rear duals), one 4 x 4 in. x 5 ft. (across gooseneck) Chain, 3/8 in x 10 ft (tie-rod ends) Chain binders, 12 ea (tiedowns) Chock blocks (rear duals) Earthmoving equipment as needed
PERSONNEL:	Three to five (minimum)

(1) Loading.

WARNING

The loading/unloading operation of the bridge is extremely dangerous. Essential personnel should always take precautions when working around the bridge and associated equipment. Non-essential personnel should always stay clear of the loading unloading operation. Be aware of what is going on around you at all times and have a route of escape.

(a) Select a level area with a bank that has enough room to negotiate a tractor-trailer from the roadway and the launcher with bridge on top of the bank, behind the tractor-trailer.

(b) Construct a dugout area at the base of the bank for the trailer's rear set of duals.

(c) Build up the bank to a height of at least three to four feet above the bottom of the dugout area. The build up should extend back behind the face of the bank for at least twenty feet.

(d) Back the trailer so that the rear set of duals are in the dugout and the back of trailer is up against the bank.

b. Loading/Unloading Scissored Bridge to/from a Lowbed Semitrailer (M172 or M172A) - CONT

WARNING

The bridge can crush you. Unessential personnel should stay clear at all times. Be aware of what is going on around you at all times. Survey a route for escape in the event of a problem.

(e) Ensure that the trailer has the proper size tires and that the tire pressure is correct before loading the bridge.

(f) Chock block the rear duals.

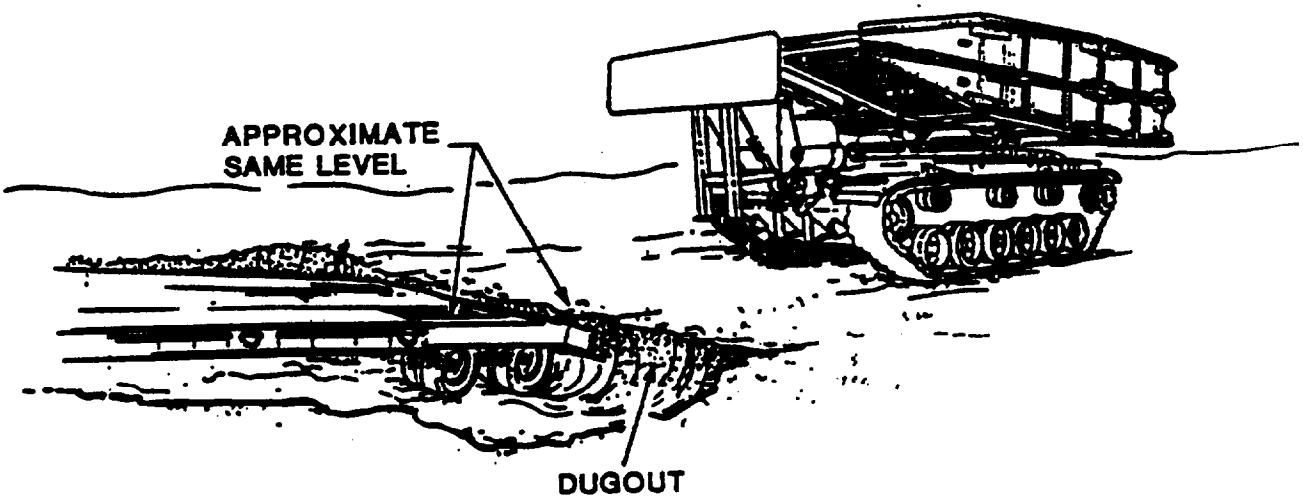

(g) With trailer positioned at bank, place the 4 x 4 in. x 10 ft timber across the bed between the rear duals and place the 4 x 4 in. x 5 ft timber across the top of the trailer's gooseneck 1 ft. 4 in. from the rear curve on the gooseneck.

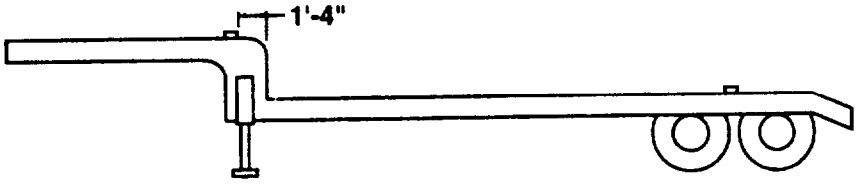

NOTE

The bed of the trailer and lower length of track of the launcher should be close to parallel.

(h) Drive the launcher up on top of the bank and center it on the trailer.

b. Loading/Unloading Scissored Bridge to/from a Lowbed Semitrailer (M172 or M172A1) - CONT

(i) Place a marking stake on top of the bank 6 feet from the end of the trailer. Locate the stake off to one side so it won't be accidentally knocked down by the launcher.

(j) Position launcher so that the launchers pad (foot) comes down on top of the bank so that its leading edge is at the 6 foot marker. See sketch below.

NOTE

The pad (foot) under the weight of the raised bridge should pack the soil on top of the bank so that it is 6-8 inches below the level of the bed of the trailer.

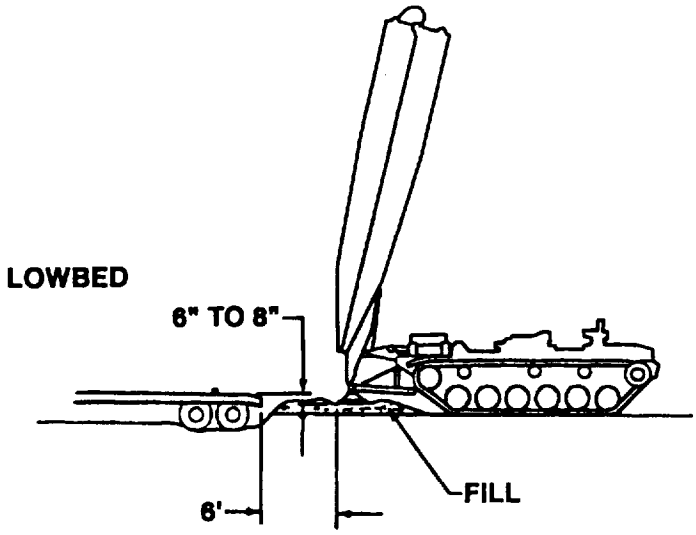

(k) Proceed to launch the folded bridge onto the trailer, ensuring that the centerline of the bridge is over the centerline of the trailer.

(1) As the center of the folded bridge approaches the trailer's gooseneck area, ensure that the inboard deck panels fall in-line with the timber placed across the gooseneck.

NOTE

The folded bridge should be placed on the trailer so that the forward edge of the quadrant lies 4 ft. 5 in. from the rear curve in the gooseneck and that the bridge ends overhang the rear of the trailer by 6 ft. 4 in. The sides of the bridge should overhang the sides of the trailer by 2 ft. 6 in. on each side. See sketch at top of page 2-87.

b. Loading/Unloading Scissored Bridge to/from a Lowbed Semitrailer (M172 or M172A1) - CONT

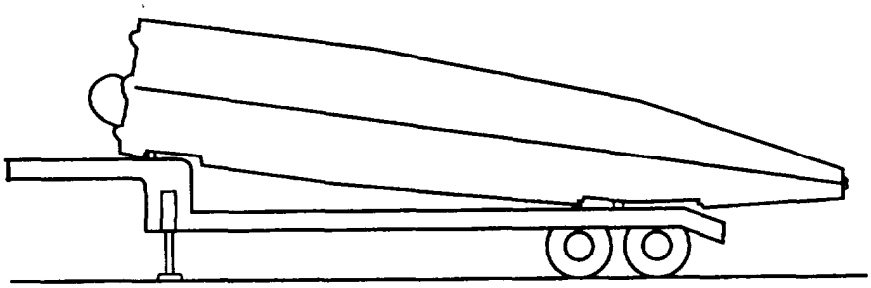

(m) After the bridge is in position on the trailer, disengage the tongue from the lifting diaphragm of the bridge.

(n) Back the launcher away from the bridge using a ground guide.

NOTE

The bridge should be secured to avoid any shifting or sliding during transport, thereby causing damage to the bridge. The maximum height of the bridge (Class 60 or Class 70) on the trailer from the ground is approximately 13 feet. Since the bridge is wider than the eight-foot wide trailer bed, this load is classified as an OVERSIZE WIDE LOAD. To transport this load will require escort vehicles both front and rear for the transport of the folded bridge.

(o) Secure bridge in position on the trailer as shown below.

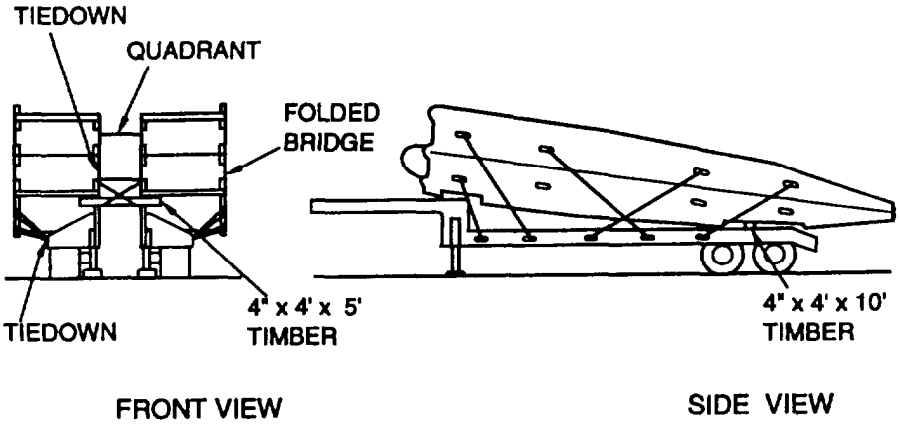

b. Loading/Unloading Scissored Bridge to/from a Lowbed Semitrailer (M12 or M172A1 - CONT

CAUTION

When securing the bridge to the trailer, DO NOT pass the steel chains through the aluminum pin holes of the center hinges or connectors. If this is done, damage to the aluminum pin holes will result, rendering the bridge inoperable.

(2) Unloading. Unloading the bridge from the lowbed semitrailer is essentially the reverse procedure of loading.

WARNING

Prior to releasing and removing the tiedown chains from the bridge/trailer, the launcher should be engaged to the bridge on the trailer to prevent the bridge from slipping or shifting its position.

- Use extreme care when releasing the binder handles to avoid backlash.
- The launcher operator should wear protective headgear or close the hatch when recovering the bridge onto the carrier to prevent injury from falling rocks and debris as the bridge is brought back into the travel position on the launcher.

(a) Move the vehicle forward, lower and position the tongue for engaging the launching diaphragm of the bridge.

(b) Ensure that the pintles of the tongue are fully seated into the launching diaphragm.

NOTE

The assistance of a crewman is needed for directing the engagement of the pintles into the launching diaphragm, and making the two hydraulic line connections on top of the diaphragm.

(c) With the launcher connected to the bridge on the trailer, remove the tiedowns and chain the tie-rod ends of the bridge.

(d) Proceed to retrieve (lift) the bridge off the trailer, by working both launcher cylinder levers (#l, the overhead cylinder, and #2, the tongue cylinder) in unison.

b. Loading/Unloading Scissored Bridge to/from a Lowbed Semitrailer (M172 or M172A1) - CONT

NOTE

Coordinating the movement of these two cylinders lessens the pressure on the trailer and reduces the chance for blowing out the trailer tires.

(e) Ensure that the bridge is properly stowed on the launcher and locked in position on its transport seat.

(f) Remove and stow the chain holding the bridge's tie-rod ends together.

(g) Remove and stow the timbers from the trailer bed, the wheel chock blocks, and the chain binders prior to moving the trailer.

(h) Refer to paragraph 2-10a(2)(b) thru 2-10a(2)(c) for unloading procedures.

c. Loading/Unloading of the Scissored Bridge to/from a Flatbed Semitrailer (MS71 or MS72).

This Task Covers:	(1) Loading (2) Unloading
EQUIPMENT CONDITIONS:	Serviceable
TOOLS/EQUIPMENT:	General Mechanics Tool Box, SC 5180-90-26N
MATERIALS:	Timbers, two 8 x 8 in. x 3-4 ft. Chain, 3/8 in. min., ten ea. Chain binders, ten ea. Chock blocks, two ea.
PERSONNEL:	Three to five (min)

(1) Loading.

WARNING

The loading/unloading operation of the bridge is extremely dangerous. Essential personnel should always take precautions when working around the bridge and associated equipment. Non-essential personnel should always stay clear of the loading/unloading operation. Be aware of what is going on around you at all times and have a route of escape.

c. Loading/Unloading of the Scissored Bridge to/from a Flatbed Semitrailer (MS71 or MS72) - CONT

(a) Select a level area with a bank that has enough room to negotiate a tractor-trailer from the roadway and the launcher with bridge on top of the bank, behind the tractor-trailer.

(b) Construct a dugout area at the base of the bank for the trailer's rear set of rear duals.

(c) Build up the bank to a height of at least four to five feet above the bottom of the dugout area. The build up should extend back behind the face of the bank for at least twenty feet.

(4) Back the trailer so that the rear set of duals are in the dugout and the back of trailer is up against the bank.

(e) Ensure that the trailer has the proper size tires and that the tire pressure is correct before loading the bridge.

(f) Chock block the rear duals.

(g) With trailer positioned at bank, build the top of the bank a foot or two above the trailer bed and extend it back at least twenty feet to include the fourth road wheel of the launcher when it is in position behind the trailer. See sketch at top of page 2-91.

(h) Drive the launcher up on top of the bank and center it on the trailer.

NOTE

The bed of the trailer and lower length of track of the launcher should be close to parallel and at approximately the same level. The pad (foot) under the weight of the raised bridge should pack the soil on top of the bank down so that it is approximately the same level as the bed of the trailer.

(i) Place a marking stake on top of the bank 6 feet from the end of the trailer. Locate the stake off to one side so it won't be accidentally knocked down by the launcher.

(j) Position launcher so that the launcher's pad (foot) comes down on top of the bank so that its leading edge is at the 6 foot marker.

(k) Proceed to launch the folded bridge onto the trailer, ensuring that the centerline of the bridge is over the centerline of the trailer.

c. Loading/Unloading of the Scissored Bridge to/from a Flatbed Semitrailer (M871 or M872) - CONT

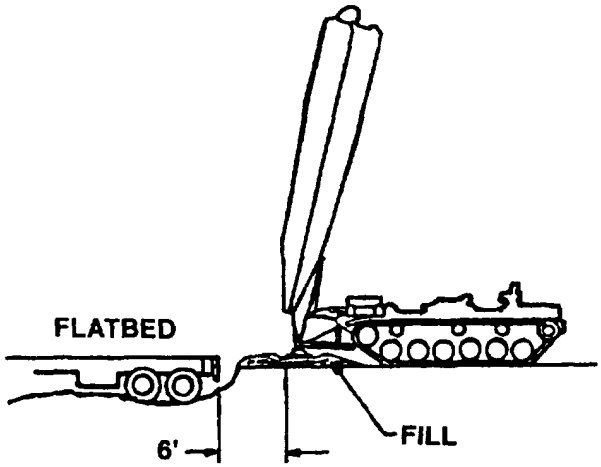

(l) Lower the folded bridge in place onto the trailer so that it is positioned laying flat on the bed.

NOTE

No timber is required for the final disposition of the loaded bridge on the flatbed trailer, as is the case for the lowbed trailer. Initially, a couple of wooden blocks, 8 x 8 in. x 3-4 ft. may be required to temporarily lay the bridge on the trailer while the launcher is raised up on the bank so that the folded bridge can be laid flat on the trailer's bed.

(m) Place the folded mid-span of the bridge (leading edge of the quadrant) approximately 2-3 feet from the front (headboard) of the trailer. See sketch below.

NOTE

With the quadrant located correctly on the trailer, the ramp ends of the bridge should not overhang the rear of the trailer. Further, the folded bridge should be positioned so that the center of gravity lies midway between the rear duals of the tractor and the forward set of rear duals of the trailer. There should be an even overhang of the bridge with respect to the sides of the trailer approximately 2-1/2 feet (on each side).

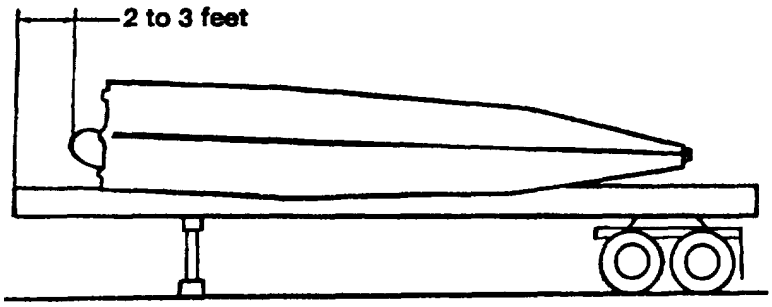

c. Loading/Unloading of the Scissored Bridge to/from a Flatbed Semitrailer (M871 or MS72) - CONT

(n) After the bridge is in position on the trailer, disengage the tongue from lifting diaphragm of the bridge.

(o) Back the launcher away from the bridge using a ground guide.

(p) Secure (tiedown) bridge in position on the trailer as shown below.

NOTE

The bridge should be secured to avoid any shifting or sliding during transport, thereby creating damage to the bridge. The maximum height of the bridge (Class 60 or Class 70) on the trailer from the ground is approximately 12 feet.

NOTE

Since the bridge is wider than the trailer, this load is classified as an **OVERSIZE WIDE** LOAD. To transport this load will require escort vehicle both front and rear for the transport of the folded bridge.

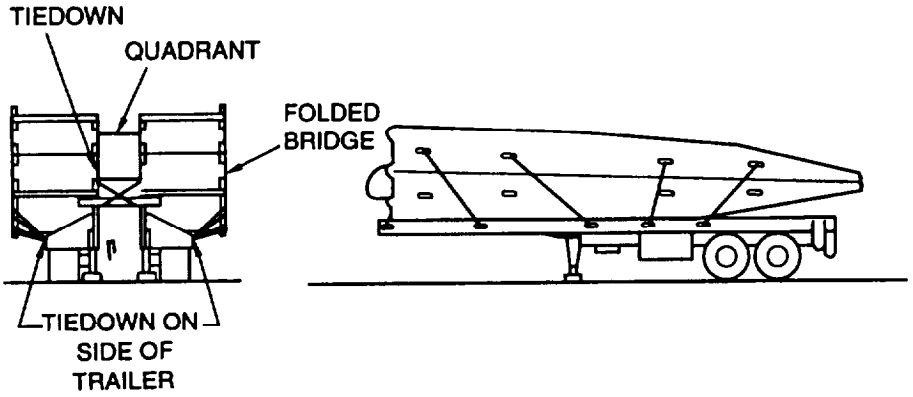

c. Loading/Unloading of the Scissored Bridge to/from a Flatbed Semitrailer (MS71 or M872) - CONT

CAUTION

When securing the bridge to the trailer, **DO NOT** pass the steel chains through the aluminum pin holes of the center hinges or connectors. If this is done, damage to the aluminum pin holes will result, rendering the bridge inoperable.

(2) Unloading. Unloading the bridge from the flatbed semitrailer is essentially the reverse procedure of loading.

WARNING

Prior to releasing and removing the tiedown chains from the bridge/trailer, the launcher should be engaged to the bridge on the trailer to prevent the bridge from slipping or shifting its position.

- When releasing the tiedown chain binders use extreme caution to avoid binder handle backlash.

- The vehicle operator should wear protective headgear or close the hatch when recovering the bridge onto the carrier to prevent injury from falling rocks and debris as the bridge is brought back into the travel position on the launcher.

(a) Move the vehicle forward, lower and position the tongue for engaging the launching diaphragm of the bridge.

(b) Ensure that the pintles of the tongue are fully seated into the launching diaphragm.

NOTE

The assistance of a crewman is needed for directing the engagement of the pintles into the launching diaphragm, and making the two hydraulic line connections on top of the diaphragm.

(c) With the launcher connected to the bridge on the trailer, remove the tiedowns and chain the tie-rod ends of the bridge.

NOTE

Coordinating the movement of these two cylinders lessons the pressure on the trailer and reduces the chance for blowing out trailer tires.

(d) Proceed to retrieve (lift) the bridge off the trailer, by working both launcher levers (#1, the overhead cylinder, and #2, the tongue cylinder) in unison.

c. Loading/Unloading of the Scissored Bridge to/from a Flatbed Semitrailer (MS71 or M872) - CONT

(e) Lift and retrieve the folded bridge onto the launcher.

(f) Ensure that the bridge is properly stowed on the launcher and locked in position on its transport seat.

(g) Remove and stow the chain holding the bridge's tierod ends together.

NOTE

The chain holding the bridge's tie-rod ends together is removed and stowed on the launcher.

(h) Remove and stow the timbers from the trailer bed, the wheel chock blocks, and the chain binders prior to moving the trailer.

d. Loading/Unloading the Scissored Bridge to/from a Lowbed Semitrailer using a Second Launched Bridge as a Ramp.

This Task Covers:	(1) Loading (2) Unloading
Initial Setup	Second launched bridge used as a ramp
EQUIPMENT CONDITIONS:	Serviceable
TOOLS/EQUIPMENT:	General Mechanics Tool Box, SC 5180-90-26N
MATERIALS:	Timbers, two 8 x 8 in. x 8 ft. (placed on treadways for launcher tracks), Two 4 x 4 in. x5 ft. (placed on treadways for launcher pad or foot), One 4 x 4 in. x 10 ft. (placed on bed between rear duals of trailer), One 4 x 4 in. x 5 ft. (placed across gooseneck of trailer) Chock blocks, two each (for rear duals) Chain binders, ten each (four on each side and two at the center front of folded bridge) Chain, 3/8 in. minimum, ten each
PERSONNEL:	Three to five (minimum)

d. Loading/Unloading the Scissored Bridge to/from a Lowbed Semitrailer using a Second Launched Bridge as a Ramp - CONT

(1) Loading.

(a) Launch the first bridge flat on the surface in open area. Refer to paragraph 2-8a for launching procedures. Ensure there is enough room for the approach and departure of a truck with a flatbed trailer.

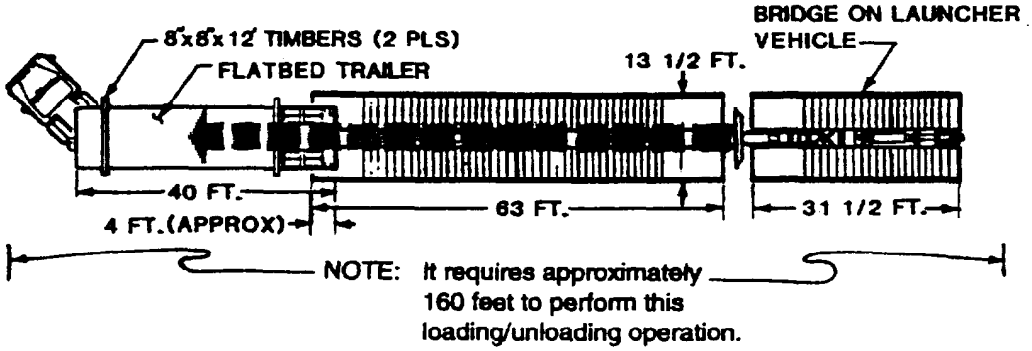

(b) Line up the truck and the flatbed trailer with the approach ramp of the launched bridge and drive the truck and flatbed trailer over the bridge as shown below.

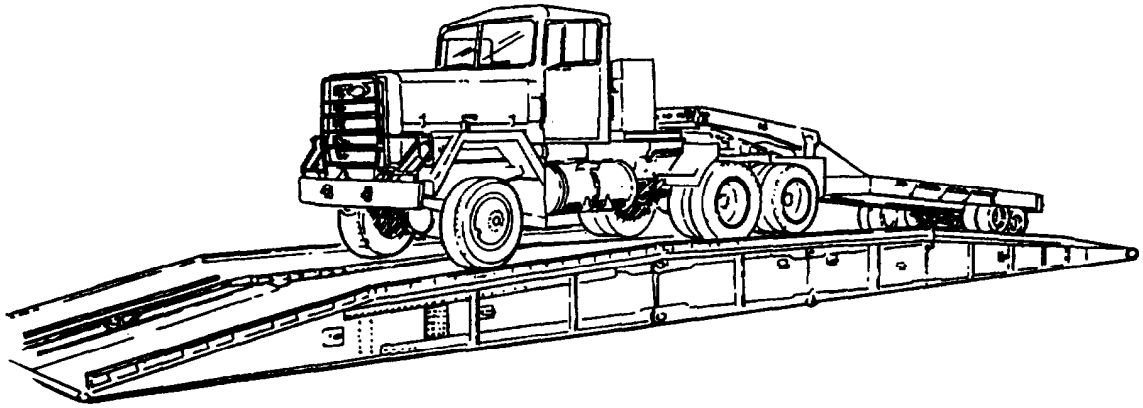

d. Loading/Unloading the Scissored Bridge to/from a Lowbed Semitrailer using a Second Launched Bridge as a Ramp - CONT

(c) Position the flatbed trailer (l), as shown. The rear of flatbed trailer should be as low as possible with at least the forward wheels (2) off the launched bridge as shown. Place two 8 x 8 in. x 12 ft timbers (3) on the bed of the flatbed trailer (1) as shown. Secure timbers using chains or cables routed over the top of the timbers and secured to the staging on the edge of the flatbed trailer (1).

(d) Apply the parking brakes to the truck and flatbed trailer (1). Place chocks (4) under the rear wheels.

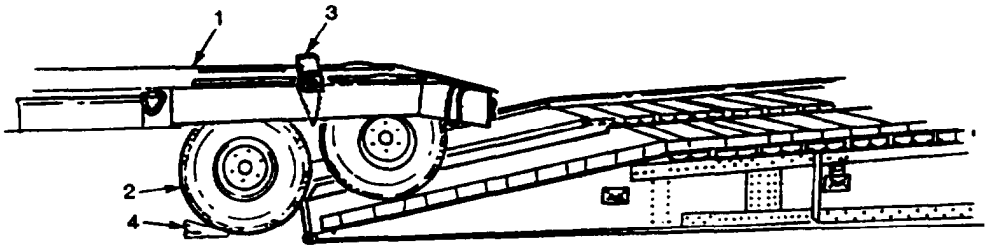

(e) Ensure truck is lined up straight with launched bridge.

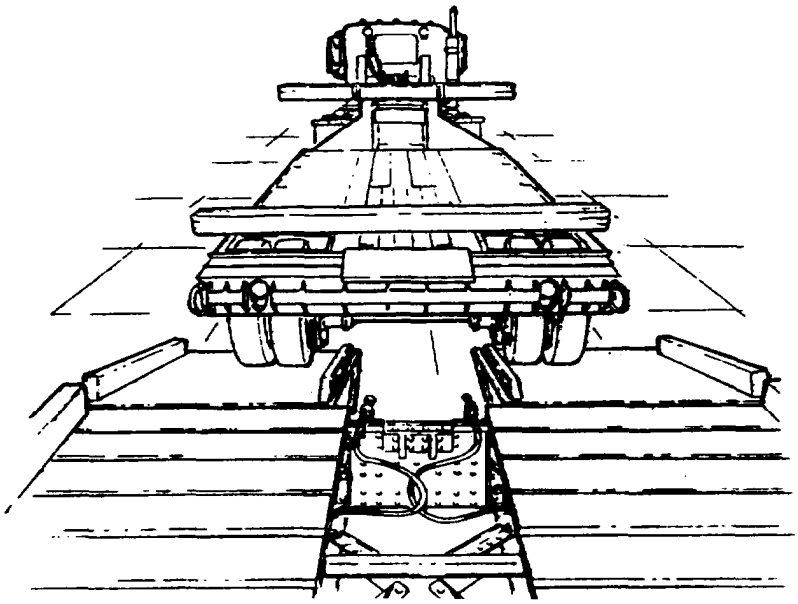

d. Loading/Unloading the Scissored Bridge to/from a Lowbed Semitrailer using a Second Launched Bridge as a Ramp - CONT

(f) Maneuver the launcher with the bridge mounted onto the approach ramp of the launched bridge.

(g) Secure both ends of the ramps together using either cables with shackles or chains with shackles, refer to paragraph 2-10a (2) (b). The chains and cables will keep the bridge scissored while being launched. If ramp ends cannot be secured at this time, secure when bridge is raised in vertical position.

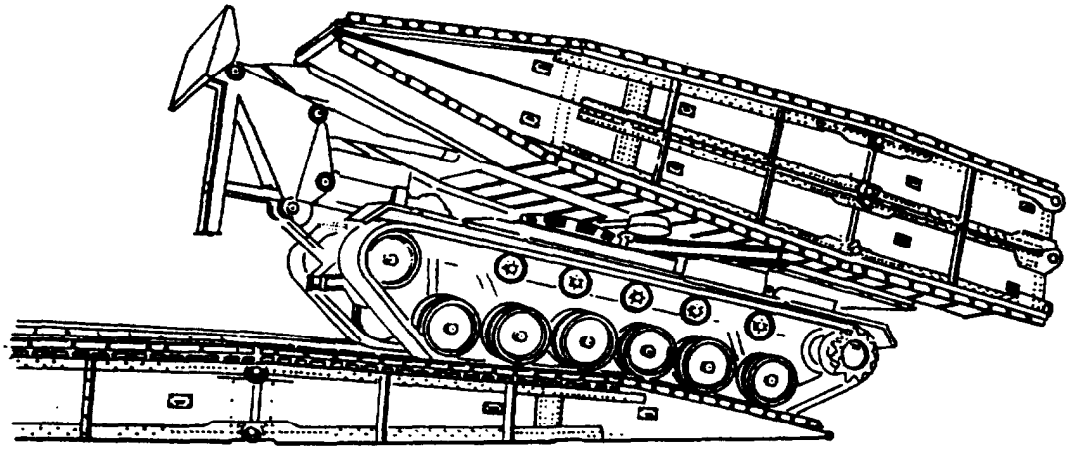

NOTE

Problems may be encountered trying to remove tie-rod nuts from tie-rods with damaged threads. If so, tie rods must be tightly secured by chain or cable.

d. Loading/Unloading the Scissored Bridge to/from a Lowbed Semitrailer using a Second Launched Bridge as a Ramp - CONT

NOTE

The 6 X 6 in. X 3 ft timbers are used to raise the launcher slightly (if needed). Thicker timber may be required. If the base of the launcher is at, or near the height of the flatbed, the timbers may not be required.

(h) Place two 6 x 6 in. x 3 ft timbers (1) and (2) as shown resting on the outside edge of the inside bridge girders.

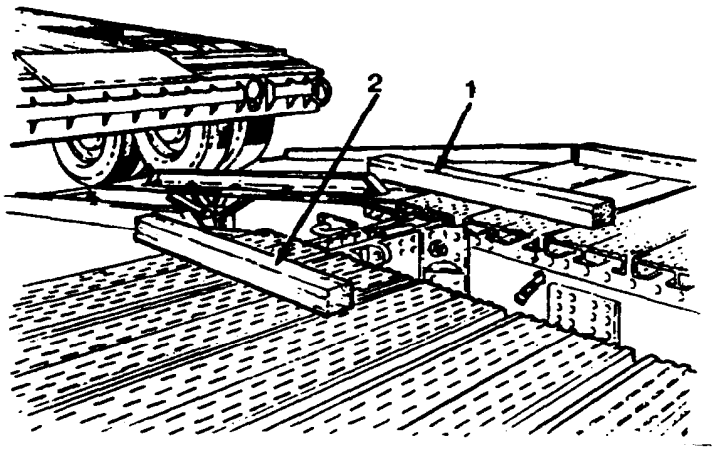

(i) Drive the launcher (1) with the mounted bridge onto the launched bridge and stop short of the timbers (2).

(j) Ensure that the tracks of the launcher vehicle (1) will contact the timbers (2) as shown. The front of the outrigger should be about 6 feet from the rear of the flatbed and about 2 ft from the ramp of the launched bridge.

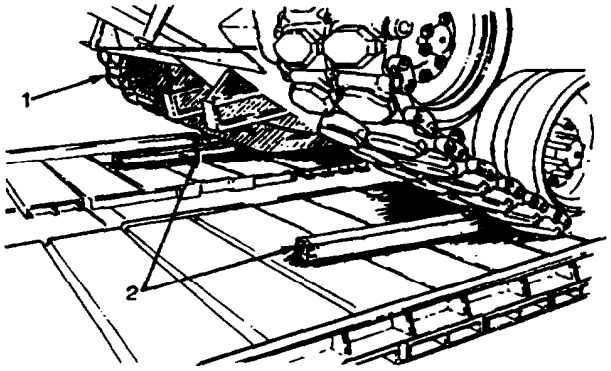

(k) Slowly pull the launcher forward until the tracks have climbed up on the timbers (2).

d. Loading/Unloading the Scissored Bridge to/from a Lowbed Semitrailer using a Second Launched Bridge as a Ramp - CONT

(1) Ensure the launcher is aligned as shown.

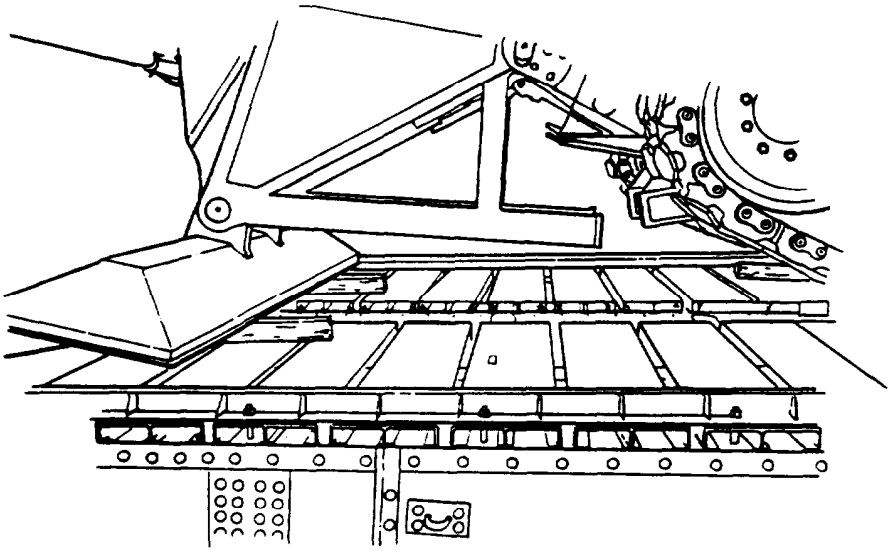

CAUTION

Care must be taken to avoid damage to the bridge when performing the following procedures

(m) Launching Sequence.

1 Engage the clutch. Set the launcher engine at 1800 RPM to develop required operating fluid flow.

2 Refer to paragraph 2-8a for an illustration of the launching sequence. With the engine set at operating RPM, lift up on lever. #1 The holdout cylinder pins will retract and the tie-down chains will be released. The bridge will begin to rise off the bridge seat.

3 Lower the base of the outrigger to where it almost contacts the 6 x 6 in. x 3 ft timbers placed on the launched bridge. Check the position of the timbers to be sure that the metal base of the outrigger will not contact the metal deck extractions of the launched bridge.

d. Loading/Unloading the Scissored Bridge to/from a Lowbed Semitrailer using a Second Launched Bridge as a Ramp - CONT

4 Lower the base of the outrigger firmly on the timbers. Be sure that the bridge, when laid, will align with the bed of the trailer.

WARNING

Working on, around, or under a suspended bridge is dangerous. Bridge may fall due to a failure in the hydraulics or a mechanical break. Never turn your back on a suspended bridge. Keep an orderly work area and stay free of tangled cables, chains, etc. In case of a failure, immediately exit the work area opposite the direction of the falling bridge.

5 Continue to maintain lifting pressure on lever #1 until the bridge has raised to the upright position and rotated slightly past vertical. The outrigger should be resting on the wood blocks at this point.

6 Release the launcher brakes slowly while keeping pressure on the brake pedal. Allow the launcher to slowly crawl forward until the out-rigger boom pads firmly contact the launcher. Return lever #1 to the neutral position.

7 Depress the brake pedal and move the transmission shift lever #6 to “P” to engage the parking brake.

8 Secure tie rods IAW step (g) if not previously accomplished.

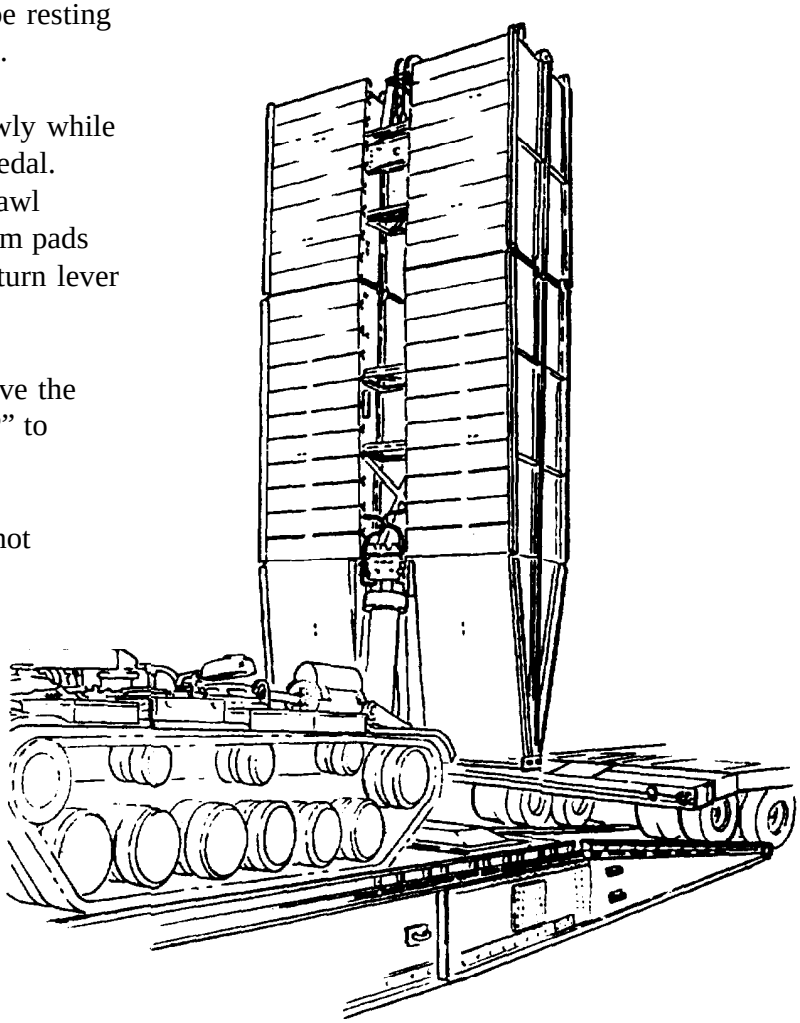

d. Loading/Unloading the Scissored Bridge to/from a Lowbed Semitrailer using a Second Launched Bridge as a Ramp - CONT

9 Lower the scissored bridge onto the bed of the trailer.

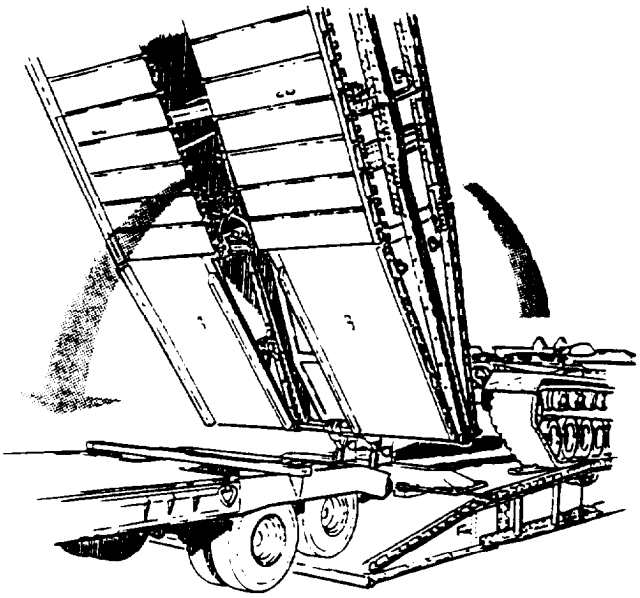

10 Work the tongue and overhead cylinders as required so the tongue will not contact the rods or spacers of the bridge.

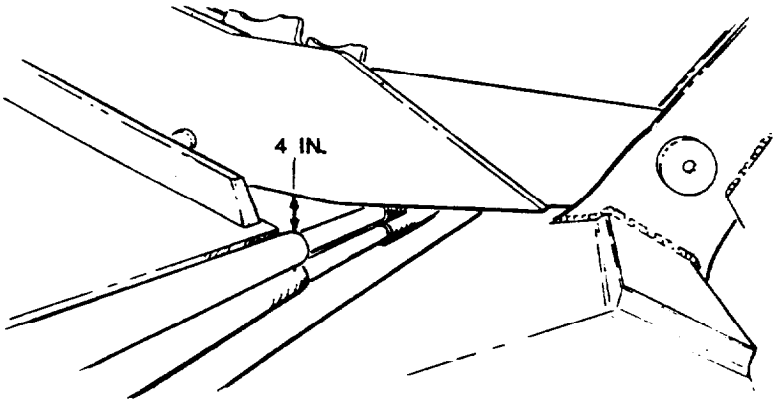

11 Be sure that the bridge being loaded will seat firmly on the 8 x 8 in. x 12 A. timber secured to the flatbed. If bridge seating is not acceptable, repeat positioning.

d. Loading/Unloading the Scissored Bridge to/from a Lowbed Semitrailer using a Second Launched Bridge as a Ramp - CONT

NOTE

- The bridge should be laid on the trailer so that the leading edge of the quadrant is centered over the gooseneck and positioned 4 ft. 5 in. from the rear curve in the gooseneck.

- The inner deck panels should make contact with the length of the 4 x 4 in. x 5 ft. timber laid across the gooseneck. This timber should be positioned 1 ft. 4 in. from the rear curve in the gooseneck.

- The ends of the bridge should overhang the end of the trailer by approximately 6 ft. 4 in., and the side overhang of the bridge should be approximately 2-1/2 ft. on each side. See the sketch below.

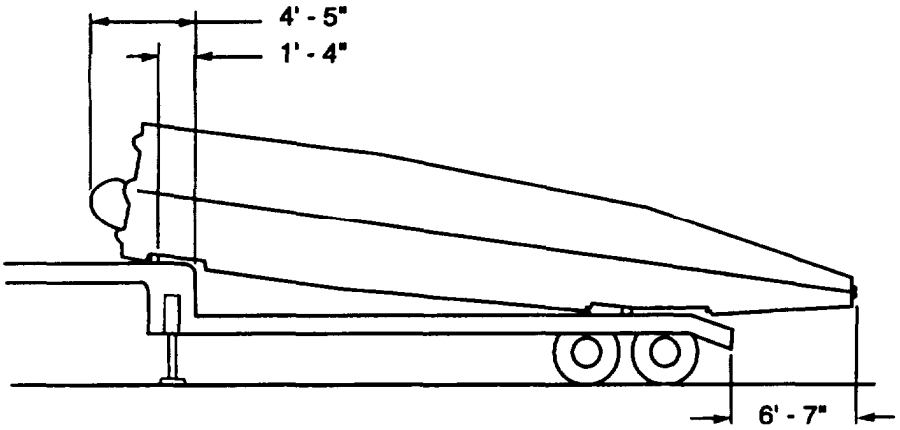

WARNING

Be sure the bridge is secure and stable on the flatbed before disconnecting tongue from bridge. If not properly seated and in a stable state, bridge could shift rapidly and fall. You could be crushed. Stay clear of bridge when the tongue is being removed. Inspect for stability before continuing operation.

(n) Disengagement of Launcher Sequence.

1 Ensure a clearance exists prior to releasing the tongue's hold on bridge. Withdraw the tongue by moving lever #2 slightly up and down, releasing the load from the tongue pintles and cross pins.

2 Engage the hydraulic clutch by lifting up on the hydraulic clutch pump lever #7. Set engine to 1800 RPM.

d. Loading/Unloading the Scissored Bridge to/from a Lowbed Semitrailer using a Second Launched Bridge as a Ramp - CONT

3 Lift up on lever #4 to retract the locking plugs. Return lever #4 to the neutral position, Return engine RPM to idle.

NOTE

If problems exist performing step (4) below, go to step (5).

4 Cycle levers #l thru #5 to reduce all hydraulic system pressure. Bridge hydraulic fluid supply line quick-disconnects should disconnect from bridge. Back launcher away from bridge. Bridge is now laid.

CAUTION

The ejection cylinder pushes the tongue from the bridge releasing the bridge. Caution must be used to avoid the premature release of the bridge when in other than a laid position. As a safety measure, the bridge ejection cylinder will not operate alone, but must be operated with the locking cylinder control,

5 If the launcher does not release from the bridge easily, the ejection cylinder will have to be used. Engage the hydraulic clutch pump lever #7. Lift up on lever #4 and hold in position

6 With the locking control lever still in the launching (up) position, lift lever #5 to the launching position and hold there until the launcher is pushed free of the bridge.

7 To retract the ejection cylinder pins, lift lever #4, and hold in the launching (up) position. At the same time, hold lever #5 in the down position until the ejection cylinder pins are retracted

8 After the launcher has been disengaged from the bridge, cycle levers #1 through #5 to reduce hydraulic line pressure. Raise the tongue by holding down on the tongue cylinder lever #2 and back the launcher away.

(o) Remove the chain holding the loaded bridge's tierod ends together and stow on the launcher

(p) Remove all wood timbers from second bridge and stow as appropriate

(q) Tiedown the loaded bridge to the trailer for transport as shown below paragraph 2-10b(2)(o)

(2) Unloading. Unloading the bridge from the lowbed semitrailer is essentially the reverse procedure of loading.

d. Loading/Unloading the Scissored Bridge to/from a Lowbed Semitrailer using a Second Launched Bridge as a Ramp - CONT

WARNING

Prior to releasing and removing the tiedown chains from the bridge/trailer, the launcher should be engaged to the bridge on the trailer to prevent the bridge from slipping or shifting its position.

- When releasing the tiedown chain binders use extreme caution to avoid binder handle backlash which may likely occur.
- The vehicle operator should wear protective headgear or close the hatch when recovering the bridge onto the carrier to prevent injury from falling rocks and debris as the bridge is brought back into the travel position on the launcher.

(a) With trailer and folded bridge in position at the second (laid) bridge, chock block the rear duals and apply the tractor parking brakes.

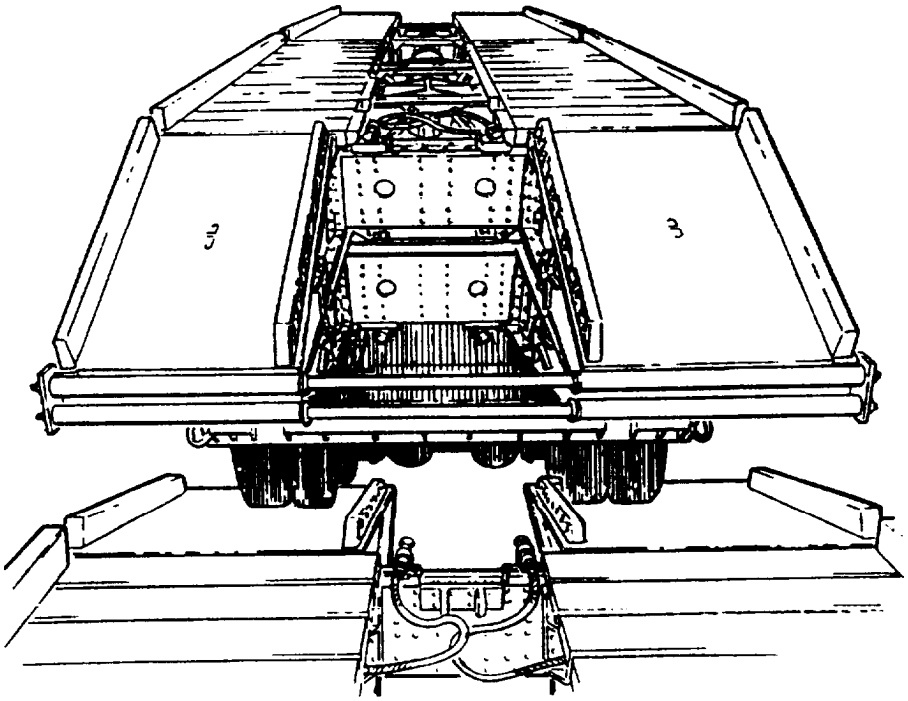

d. Loading/Unloading the Scissored Bridge to/from a Lowbed Semitrailer using a Second Launched Bridge as a Ramp - CONT

(b) Drive the launcher up onto the second bridge and position it in the same location as for the loading operation.

(c) Raise the tongue into position for engaging the lifting diaphragm of the bridge.

(d) Mate the tongue to the launching diaphragm on the bridge, ensuring that the pintles of the tongue are fully seated.

NOTE

A crewman will need to assist in lining up the pintle pins for engagement of the launching diaphragm. Once engaged, the crewman will need to connect the two hydraulic lines located on top of the diaphragm plate.

(e) With the bridge hooked up to the launcher, proceed to retrieve (unload) the bridge from the trailer.

(f) Remove and stow the tiedown holding the bridge to the trailer.

(g) Manipulate both launcher cylinder levers (#l, the overhead cylinder, and #2, the tongue cylinder) in unison during the lift operation, to equalize the bridge load on the trailer.

NOTE

Coordinating the movement of these two cylinders lessens the pressure on the trailer and reduces the chance for blowing out trailer tires.

(h) Continue to retrieve the folded bridge folded back onto the launcher into its travel position.

(i) With the bridge seated on the launcher, ensure that it is secured in position with the hold down chains for transport.

(j) Remove and stow the chain holding the bridge's tierods together with the BII on the launcher

(k) Remove and stow the two timbers from the trailer bed and the wheel chock blocks prior to moving the trailer.

e. Loading/Unloading a Scissored Bridge to/from a Lowbed or Flatbed Semitrailer using forklifts.

This Task Covers:	(1) Loading (2) Unloading
Initial Setup:	Two 15-20 ton capacity forklifts
EQUIPMENT CONDITIONS:	Serviceable
TOOLS/EQUIPMENT:	General Mechanics Tool Box, SC 5180-90-N26
MATERIALS:	Wooden blocks, 8 x 8 in. x 3-4 ft., four each (to rest folded bridge on ground)

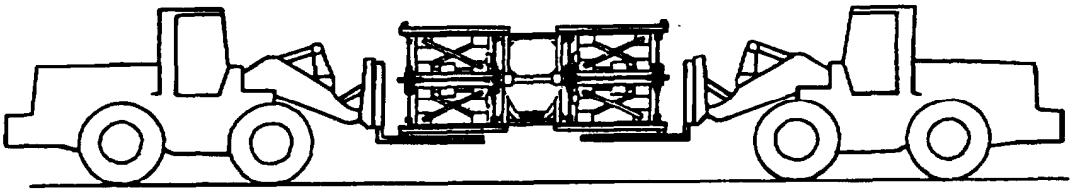

(1) Loading.

WARNING

The loading/unloading operation of the bridge is dangerous. If the hydraulic system fails during the operation and the bridge breaks loose, property can be damaged and personnel seriously hurt, if not killed. Essential personnel should always take extra precautions when working around the bridge and equipment; **NEVER** place yourself under or in the path of the bridge, if it were to fall. Non-essential personnel should stay clear of the loading/unloading operation at all times, remaining at least 50 feet away. Always be aware of what actions are going on around you at all times. Be sure to know your route of escape in event of an emergency.

e. Loading/Unloading a Scissored Bridge to/from a Lowbed or Flatbed Semitrailer using forklifts - CONT

CAUTION

The forklift operators should always use extreme caution when operating the forklifts, so as not to impart damage to the bridge or semitrailer during a loading or unloading operation. If in doubt about a certain procedure of the operation, the operators should stop the process until they can resolve the problem. The bridge should always be handled cautiously and safely. Avoid puncturing the sides of the bridge with a fork of the forklift when engaging the equipment.

NOTE

A lowbed semitrailer is preferred over the flatbed semitrailer for this operation because of its lower trailer bed (3'3" vs. 4'4") which results in a lower lift of the bridge for clearing the trailer bed.

(a) Use two forklifts, one on each side of the folded bridge. A third person is needed to lead and coordinate the lifting and loading effort. With the forks spread wide apart, position the forklifts so they are centered on the black vertical marks (lines) painted on each side of the bridge (this marks the location of the center of gravity or point of balance). It is important that the black vertical lines be kept centered between the forks of the forklifts. Slowly and cautiously move the forklifts towards the bridge, working the forks underneath the bridge in a cradling fashion If the bridge is located on the ground, it should be positioned off the ground by use of wooden blocks. The blocks should be high enough so that the forks of a forklift can. easily be slipped underneath the bridge. This will also help the operator; when they pickup the bridge. The operators should ensure that their forks are fully located underneath the bridge before starting the lift operation. Prior to lifting the bridge chain the tie-rod ends together to prevent the bridge ends from spreading apart during the lift.

(b) On command of the third party (the NCOIC or appointed soldier), both forklift operators slowly raise the bridge off the ground to a suitable height, approximately 4-5 feet, that would clear the bed of the semitrailer when it is backed in underneath the raised bridge.

e. Loading/Unloading a Scissored Bridge to/from a Lowbed or Flatbed Semitrailer using forklifts - CONT

(c) With the folded bridge raised off the ground, back the trailer slowly underneath the folded bridge so that the bridge may be laid flat and centered on the trailer. Position two timbers fore and aft on the bed of the trailer, so that the bridge will be raised off the trailer bed only enough to allow the forks to be retracted from underneath. The size of the timbers should be approximately 8” x 8” x 8’ long and placed across the trailer bed, 3-4 feet in from each end of the bridge. The timber needs to be 8” wide x 8” high because the decking of the bridge will rest on it and there needs to be ample room underneath for the forks to be inserted and/or retracted easily. If necessary, carefully jockey the bridge so that it is centered on the trailer. The tractor should be kept hooked-up to the trailer to prevent any movement of the trailer from occurring. There is no need to chock the rear duels of the trailer, unless the tractor is removed. When loading onto the lowed/flatbed semitrailer, care should be taken to keep the quadrant clear of the gooseneck of the lowed or the vertical head board of the flatbed trailer to avoid any damage.

(d) Once the bridge is in position aboard the trailer, it should be secured IAW applicable illustration above, i.e., either the lowbed or flatbed semitrailers. See paragraphs 2-10b(1)(o) or 2-10c(1)(p) for method of tiedown.

CAUTION

When securing the bridge to the trailer, **DO NOT** pass the steel chains through the aluminum pin holes of the center hinges or connectors. If this is done, damage to the aluminum pin holes will result, rendering the bridge inoperable.

(2) Unloading. This operation is essentially the reverse of the loading operation, above.

WARNING

Prior to releasing and removing the tiedown chains from the bridge/trailer, the forklifts should be in position along each side of the bridge with forks cradled underneath the bridge to prevent the bridge from slipping or shifting its position.

When releasing the tie down chain binders use extreme caution to avoid binder handle backlash which may likely occur.

(a) Position two forklifts on each side of the folded bridge on the semitrailer, spread and center the forks on the black vertical lines painted on the sides of the sections (Class 70) or bridge (Class 60).

e. Loading/Unloading a Scissored Bridge to/from a Lowbed or Flatbed Semitrailer using forklifts - CONT

(b) Both operators, under the direction of a third party (their supervisor or chosen individual to coordinate the unloading operation), move their vehicles towards both sides of the bridge keeping the black vertical line between the forks until the bridge is resting fully on all four forks. The forks should be parallel to each other and perpendicular to the longitudinal centerline of the folded bridge.

(c) At the command "LIFT", both operators slowly raise the bridge off the trailer, high enough so that the trailer can be driven out from under the bridge.

(d) Once the trailer has cleared the suspended bridge, the forklift operators will lower the folded bridge, using the third party as their guide, slowly down to the ground. Wooden blocks are then placed in position to rest the bridge on. The bridge should be approximately 4 inches off the ground so that it can be easily picked up by forklifts. The ground location for stowage of the bridge should be fairly level and accessible.

(e) With the bridge in its position on the ground, the forklift operators may disengage the forks from under the bridge by slowly backing out and away from the bridge. When backing out, ground guides will be used and caution should be taken.

f. Loading/Unloading a Scissored Bridge to/from a Lowbed or Flatbed Semitrailer using a crane (20 ton capacity or higher).

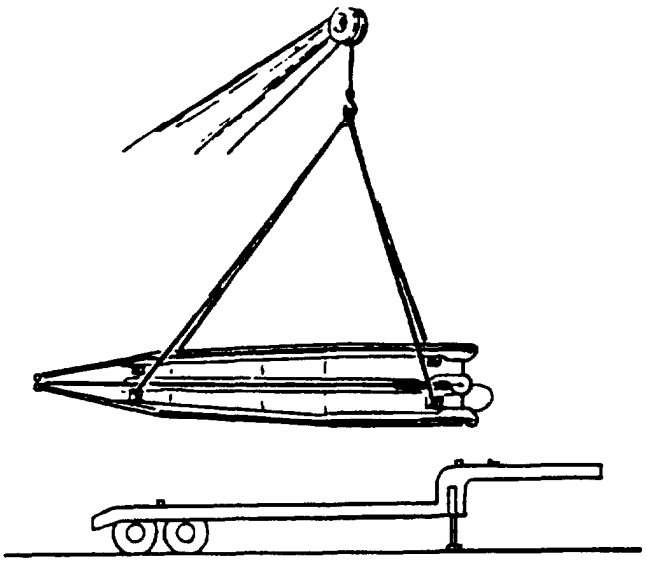

f. Loading/Unloading a Scissored Bridge to/from a Lowbed or Flatbed Semitrailer using a crane (20 ton capacity or higher) - CONT

(1) Loading.

WARNING

The loading/unloading operation of the bridge is dangerous. If the hydraulic system fails during the operation and the bridge breaks loose, property can be damaged and personnel seriously hurt, if not killed. Essential personnel should always take extreme precautions when working around the bridge and equipment, never place yourself under or in the path of the bridge, if it were to fall. Non-essential personnel should stay clear of the loading/unloading operation at all times, remaining at least 50 feet away. Always be aware of what actions are going on around you at all time. Be sure to know your route of escape in event of an emergency.

CAUTION

The crane operator should always use extreme caution when operating the crane, so as not to impart damage to the bridge or semitrailer during a loading or unloading operation. If in doubt about a certain procedure of the operation, the operators should stop the process until they can resolve the problem. The bridge should always be handled cautiously and safely.

NOTE

A lowbed semitrailer is preferred over the flatbed semitrailer for this operation because of its lower trailer bed (3’3” vs. 4’4”) which results in a lower lift of the bridge for clearing the trailer bed.

(a) Use a 20-ton or higher lifting capacity crane to lift the whole scissored bridge (Class 60 or Class 70) onto a semitrailer (lowbed or flatbed).

(b) Position the crane to one side and centered between the bridge (to be lifted) and the trailer (to be loaded on). Stabilize the crane platform by jacking up the crane.

(c) The crane operator should use a standard 4-legged chain sling with lifting hooks. Length of the legs should be approximately 20 feet long and each leg being of equal length. Prior to lifting the bridge, the tie-rod ends should be chained together to prevent the bridge ends from opening during the operation.

(d) Attach the sling to the four lower lifting points (two nearest the center of the bridge and two nearest the bridge ends), located along the outboard sides of the bridge. Always hook up to the lower half of bridge. The upper half will merely rest on its lower half during the lift operation. This lift method will lift the folded bridge straight upwards for loading onto a semitrailer. The transport of this configuration is considered to be an “Oversized Wide Load” and will require proper vehicle escort from point of origination to point of destination.

f. Loading/Unloading a Scissored Bridge to/from a Lowbed or Flatbed Semitrailer using a crane (20 ton capacity or higher) - CONT

(e) Once the lifting hooks are in place at the four side lifting points on bridge, the crane operator should lift slowly, taking the slack out of the sling lines, plus ensuring that binding of the cable or hooks.

(f) Proceed to lift and swing the bridge into position onto the semitrailer. A guide line (rope) should be attached to one comer of the folded bridge so it can be guided by a ground crewman when positioning and centering the bridge longitudinally on the semitrailer.

(g) Once the bridge is in place, properly secure it to the semitrailer as specified in paragraphs 2-l0b(l)(o) or 2-10c(l)(p) as appropriate.

(2) Unloading. This procedure is the reverse of the loading operation

WARNING

Prior to releasing and removing the tie down chains from the bridge/trailer, the crane should be in position with the 4 legged sling attached to the folded bridge along the lower half at the four side lift points of the bridge to prevent the bridge from slipping or shifting its position.

When releasing the tiedown chain binders use extreme caution to avoid binder handle backlash which may likely occur.

(a) Position the crane on center and between the semitrailer with bridge, and the area on the ground where it is desired to place the folded bridge for the off-loading operation.

(b) Attach guide line (rope) to one corner of the bridge so it can be swung or rotated into position as desired on the ground.

(c) Attach the lifting hooks from the sling to the appropriate four side lift points along the outboard lower half of the bridge. Chain the bridge's tie-rods together before lifting the bridge Begin the lift by slowly taking up the slack and checking for any binding of sling.

(d) Continue the lifting of the bridge so that it clears the bed of the trailer, move the trailer out from under the bridge, and swing the bridge to its intended position on the ground. Orient the bridge by use of the attached guide line and lower it in place, setting it down on prepositioned wooden blocks keeping the bridge approximately 4 inches off the ground.

(e) Detach the sling and guide line and stow with the other BII on the launcher.

g. Transport of the AVLB system (Class 60/Class 70 Bridges) for Air, Rail, Sea and Highway Mode of Transportation.

(1) Introduction. The Class 60 and Class 70 bridges look almost the same, but there are some differences that change their physical configuration. The Class 70 differences include the overall weight, overall width, the redesign of the center hinges, the wider and thicker flange of the main aluminum angles, in the bottom chords, and the creation of quarter-sections (fixing the center and end panels together as one unit) instead of having separate panels (center and end or ramp) as with the Class 60 bridge. These changes have resulted in a slightly heavier and wider Class 70 bridge, i.e., the weight is approximately 30,000 lbs (15 tons) or about 700 lbs heavier than the Class 60 bridge, and the width at the bottom flange of the main aluminum angles; is 3.5 inches wider (the Class 60 bridge being 13.2 feet wide.

(2) Since the Class 60 bridge has never been provided with proper lifting point; for the lift of the whole scissored (folded) bridge, the Class 70 bridge will have lift points so that the folded bridge can be safely lifted for easy loading aboard transport means at the loading dock using a standard equal-length four-legged sling. Lifting points for the lift of the folded bridge will also be provided for the Class 60 bridges when they are turned in to the depot for repair or overhaul. Both bridges will use the same type lifting points designed to replace the eight side tiedowns located at the ends along the outboard girders of the bridge.

(3) In the past, the folded Class 60 bridge has been lifted using the tiedowns and many were broken requiring replacement at the depot. Lift points have been designed for use on both the Class 60 and Class 70 bridges so the folded bridge can be properly and safely lifted aboard appropriate means of transport.

(4) In addition, since the Class 70 bridge sections have been formed from the individual center and end panels, a two-legged sling of unequal legs will be used for moving the Class 70 bridge's quarter-sections. These sections weigh approximately 6000 lbs each and will have the capability of being lifted individually from the outboard side. When using this method, the two lifting points located at the farthest ends of the section are used, NOT the middle two lift points on the side. The Class 60 bridge center and end panels will only be lifted through their deck by use of the 2-legged sling currently in the BII. This sling will not be used to lift these panels from their sides.

(5) The following addresses the four primary modes of transport in relation to deploying the Class 60 or Class 70 bridge components:

g. Transport of the AVLB system (Class 60/Class 70 Bridges) for Air, Rail, Sea and Highway Mode of Transportation - CONT

(a) Air. Normally the AVLB system (Class 60 or Class 70 bridges) will be loaded aboard C-5 aircraft for shipment. The launcher and bridge components are loaded into the aircraft separately (due to height restrictions); the bridge (folded) is placed on a dolly and rolled into the aircraft. The folded bridge will have eight lift points along its outboard sides (four positioned around the upper half of the bridge and four on the lower half), so that the bridge can easily be lifted no matter which bridge half rest on the bottom. Looking at a folded bridge these lift points are located at the same place where the two end tiedowns had been located on each bridge half (both outboard sides). It is important to always use the lower set of four lift points, so that the top half of the bridge will always rest on the lower half Always attach to the lower half of the folded bridge. Lifting of the entire folded bridge will be accomplished by using a standard four-legged, equal- length sling or that which is normally used at the loading dock.

NOTE

The increase in weight or width of the Class 70 bridge over the Class 60 bridge is not a factor Until the Class 60 bridge is outfitted with proper side lifting points, as is the Class 70 bridge, it will be handled as done in the past, but the tiedowns are not to be used to lift from. **TIEDOWNS ARE NOT LIFT POINTS.** As a reminder, the only lifting points currently designed for the AVLB bridge are located in the aluminum deck plates of both the center and end (ramp) panels, but these were only to lift individual panels NOT the whole bridge, and NOT a combined center-to-end panel or section as in the case of the Class 70 bridge. The current Class 60 bridge has only tiedowns along the outboard and inboard sides of each panel are only tiedowns along the outboard and inboard sides of each individual panel, and these tiedowns should NOT be used for lifting purposes.

(b) Rail. For rail transport of the AVLB system;

NOTE

The class 60 bridge will be disassembled into its eight individual panels and components parts, such as hydraulic components and the cross-bracing and tie-rods that hold the treadways together and shipped in a gondola car to its final destination.

The class 70 bridge will be disassembled into its four individual quarter-sections, hydraulic components and intertreadway connecting bracing and shipped on a flat car to its final destination.

g. Transport of the AVLB system (Class 60/Class 70 Bridges) for Air, Rail, Sea and Highway Mode of Transportation - CONT

(c) Sea For sea or waterway transport (cargo, roll on/roll-off, barge, float bridge, etc.) of the AVLB system, it is desirable that the AVLB system (launcher and bridge) be shipped as one unit (bridge in transport mode on the launcher). With respect to the bridge envelope, the Class 70 bridge is approximately 700 lbs heavier and 3.5 inches wider than the Class 60 bridge; their physical configurations appear to be nearly the same, only that the class 70 bridge is made of four quarter-sections, while the class 60 bridge is made of eight panels. Both bridges fold the same at the center hinges into their scissored transport mode aboard the launcher.

NOTE

With the bridge mounted in the transport mode on its launcher, there is a height restriction problem (approximately 13 feet), which would obstruct crew visibility when navigating a barge (landing craft) from its bridge. In this case, it would be desirable to ship the launcher and bridge in two separate units. Both the Class 60 and Class 70 bridges will have a total of eight lift points mounted along the outboard side; of the bridge girders that can be easily attached to for lift of the folded bridge by a crane at dockside. The crane could lift the bridge from the hold of a ship, set it on the ground in folded configuration, and the launcher could roll out and proceed to retrieve the bridge for transport by the unit.

(d) Highway. For highway transport, it is preferred that the whole scissored bridge (Class 60 or Class 70) be shipped as an (OVERSIZE WIDE LOAD) by either commercial or military vehicles. The overall maximum heights of the scissored bridge loaded on a semitrailer (lowbed or flatbed) are approximately 13 feet and 12 feet, respectively. Shipping the whole bridge intact saves on disassembly and re-assembly time and work. The bridge can be launched onto these trailers by its launcher or lifted onto the trailers by use of a crane or two forklifts as explained above. The transport of the wide load requires escort vehicles and the appropriate state highway permits

2-11. PREPARATION FOR MOVEMENT.

Before moving the bridge, routine PMCS shall be performed. If the bridge is destined for a combat zone (and time permits) all checks and services should be performed. The bridge can be moved many ways. The primary mode of transporting the bridge is by launcher.

CAUTION

Make sure hydraulic clutch pump lever #7 is disengaged before movement. Failure to disengage can cause blown hydraulic lines or seals and other damage.

NOTE

Refer to paragraph 2-1, Use of Controls and Indicators, for the operation of levers.

a. Movement of AVLB by Launcher Vehicle. The bridge can be moved to it's site by the launcher vehicle. See FIGURE 1-1. Prior to movement, ensure a PMCS has been performed. Ensure the bridge is properly sedated on the bridge seat by making a visual inspection. Make a visual check of the locking plugs to ensure they are properly seated and secure. Ensure the hydraulic clutch pump lever #7 is disengaged. Ensure tiedown chains are secure and the pins of the holddown cylinder are extended. Perform an overall visual check of the bridge for any problem that may have not been addressed in PMCS. The bridge is now ready to be transported.

b. Movement of AVLB by Flatbed Trailer. An assembled AVLB cannot be moved easily over commercial routes. Loading the AVLB on the transport vehicle is addressed in paragraph 2-10, Loading and Unloading Procedures.

CHAPTER 3

MAINTENANCE PROCEDURES

Section I. LUBRICATION INSTRUCTIONS

3-1. GENERAL.

Lubrication will:
- Reduce wear to the mating areas of the bridge.
- Extend the life of the bridge.

Lubricate:
- More often during periods of training and severe weather.
- Prior to use, when possible.
- During extended periods of use.
- After washing and fording.

MATERIAL: Grease, Automotive and Artillery (item 1, Appendix D)

Lubricate using application methods as illustrated below.

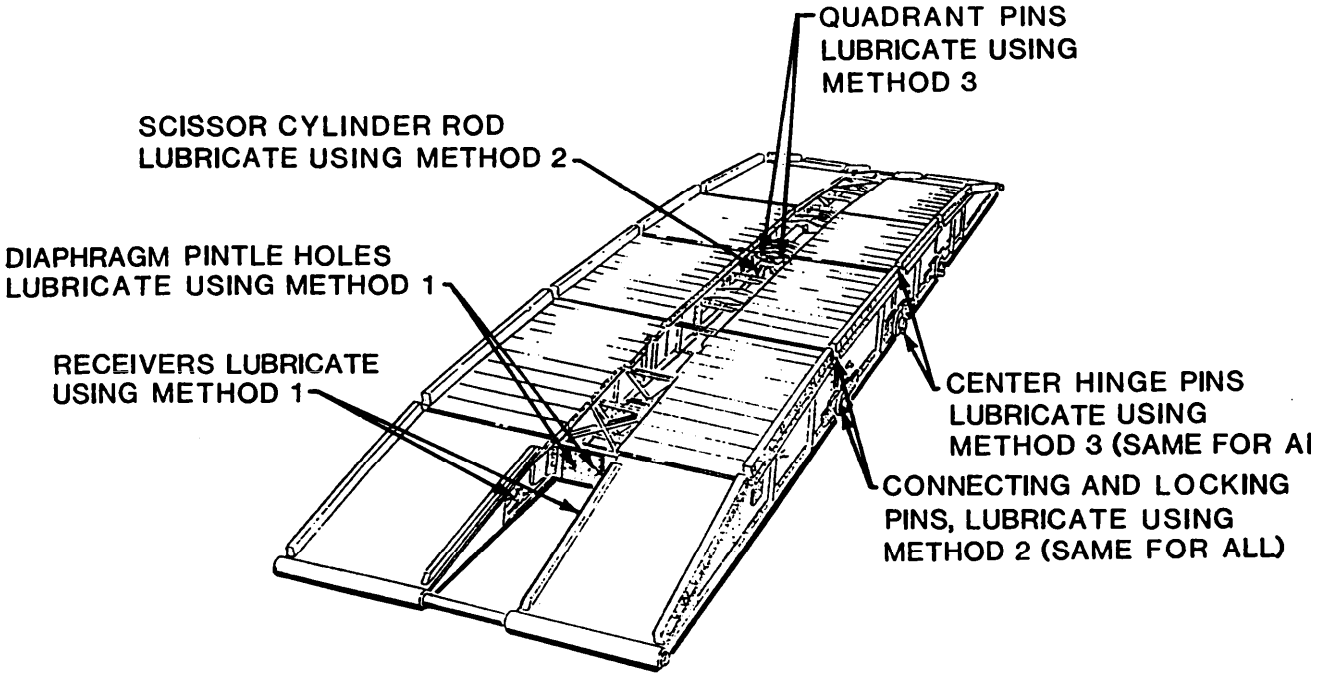

NOTE LUBRICATE ALL CABLE CONNECTING POINTS, HARDWARE PINS, ETC., AT TIME OF ASSEMBLY OR BI-YEARLY. LUBRICATE PRIOR TO STORAGE.

LUBRICATION METHODS:
1. Heavy application 1/16 to 1/8 in. deep.
2. Light application (film) to retard corrosion.
3. Mechanical application using grease gun.

Section II. REPAIR PARTS; SPECIAL TOOLS; TEST, MEASUREMENT, AND DIAGNOSTIC EQUIPMENT (TMDE); AND SUPPORT EQUIPMENT

3-2. **COMMON TOOLS AND EQUIPMENT.**

For authorized common tools and equipment, refer to Modified Table of Organization and Equipment (MTOE) applicable to your unit.

3-3. **SPECIAL TOOLS, TMDE, AND SUPPORT EQUIPMENT.** Refer to the Maintenance Allocation Chart, Appendix B, of this manual and TM 5-5420-203-24P.

3-4. **REPAIR PARTS.** Repair parts are listed and illustrated in TM 5-5420-203-24P.

Section 111. SERVICE UPON RECEIPT

Perform the following functions to determine serviceability of the bridge,

- Check bridge paperwork for previous use and repair history.
- Complete and return receipt forms.
- Perform Preventive Maintenance Checks and Services (PMCS) (see paragraph 2-3).
- Report failures on DA Form 2404, Equipment Maintenance and Inspection Worksheet.
- Perform repairs, if required.
- Lubricate bridge in accordance with lubrication instructions and chart, paragraph 3-1.

Section IV. TROUBLESHOOTING

3-5. **INTRODUCTION.**

a. Table 3-1 lists the common malfunctions that can occur during operation or maintenance of the Armored Vehicle Launched Bridge (AVLB) or its components. You should perform the tests/inspections and corrective actions in the order listed.

b. This manual cannot list all malfunctions that may occur or all tests or inspections and corrective actions. If a malfunction is not listed or not corrected by listed corrective actions, notify your supervisor

3-6. TROUBLESHOOTING.

SYMPTOM INDEX

Malfunction	Launching	Page
1.	Hydraulic fluid under pressure is observed	3-3
2.	Bridge will not lift from bridge seat	3-4
3.	Bridge reacts rapidly to controls (jerks, jumps)	3-4
4.	Bridge reacts slowly to controls	3-4
5.	Bridge reacts well to controls, then fails to move	3-4
6.	Bridge lifts from bridge seat slowly or stops	3-5
7.	Bridge is slow to raise to vertical position	3-5
8.	Bridge raises to vertical position, then stops	3-5
9.	Bridge begins to lower, then stops	3-6
10.	Bridge will not fully extend flat prior to laying	3-6
11.	Bridge assumes an unusual position during launch/retrieval	3-6

Malfunction	Retrieval	Page
1.	Hydraulic fluid under pressure is observed	3-3
3.	Bridge reacts rapidly to controls (jerks, jumps)	3-4
4.	Bridge reacts slowly to controls	3-4
11.	Bridge assumes an unusual position during launch/retrieval	3-6
12.	Bridge will not lift from launched position	3-7
13.	Bridge raises from ground, but stops	3-7
14.	Bridge will not raise to full vertical position	3-7
15.	Bridge will not lower to bridge seat	3-7

Table 3-1. Troubleshooting

MALFUNCTION TEST OR INSPECTION CORRECTIVE ACTION

1. HYDRAULIC FLUID UNDER PRESSURE IS OBSERVED.

Step 1. Check hydraulic connections at leak.
Tighten loose connections.

Step 2. Check hydraulic quick-disconnects.
Reconnect hydraulic quick-disconnects.

Step 3. Check threads of hoses and lines at leak.
Replace defective component if threads, etc. are damaged.

Table 3-1. Troubleshooting - CONT

MALFUCTION
TEST OR INSPECTION
CORRECTIVE ACTION

2. **BRIDGE WILL NOT LIFT FROM BRIDGE SEAT.**

Step 1. Check hydraulic fluid level of launcher.
Fill fluid level as required.

Step 2. Check hydraulic lines, connections on launcher.
Replace defective lines.
Tighten loose connections.
Check hydraulic filter for obstruction.

Step **3.** Check quick-disconnect ends for obstructions.
Clean as required

3. **BRIDGE REACTS RAPIDLY TO CONTROLS, (JERKS, JUMPS).**

Step 1. Check engine RPM.
Set RPM no higher than 1800.

Step 2. Check hydraulic system for air bubbles.
Bleed air from system using bleed valves located on scissor cylinder, and cycle launcher controls.

4. **BRIDGE REACTS SLOWLY TO CONTROLS.**

Step 1. Check hydraulic fluid level.
Add fluid as required.

Step 2. Check hydraulic line/hose connections.
Repair, attach, tighten, or connect as necessary.

5. **BRIDGE REACTS WELL TO CONTROLS, THEN FAILS TO MOVE.**

Step 1. Check for loose or leaking hydraulic connections.
Reconnect hydraulic connections.
Tighten loose connections.
Replace defective lines or hoses.

Step 2. Check hydraulic fluid level.
Add hydraulic fluid as required.

Step 3. Check output of hydraulic pump on launcher.
Perform repairs as required.

Table 3-1. Troubleshooting - CONT

MALFUNCTION TEST OR INSPECTION CORRECTIVE ACTION
6. BRIDGE LIFTS FROM BRIDGE SEAT SLOWLY, OR STOPS.
Step 1. Check for loose or leaking hydraulic connections. Reconnect hydraulic connections. Tighten loose connections. Replace defective lines or hoses.
Step 2. Check hydraulic fluid level. Add hydraulic fluid as required.
Step 3. Check output of hydraulic pump on launcher. Perform repairs as required.
7. **BRIDGE IS SLOW TO RAISE TO VERTICAL POSITION.**
Step 1. Check for loose or leaking hydraulic connections. Reconnect hydraulic connections. Tighten loose connections. Replace defective lines or hoses.
Step 2. Check hydraulic fluid level. Add hydraulic fluid as required.
Step 3. Check output of hydraulic pump on launcher. Perform repairs as required.
8. BRIDGE RAISES TO VERTICAL POSITION, THEN STOPS.
Step 1. Check for loose or leaking hydraulic connections. Reconnect hydraulic connections. Tighten loose connections. Replace defective lines or hoses.
Step 2. Check hydraulic fluid level. Add hydraulic fluid as required.
Step **3.** Check output of hydraulic pump on launcher. Perform repairs as required.

Table 3-1. Troubleshooting - CONT

MALFUNCTION TEST OR INSPECTION CORRECTIVE ACTION
9. BRIDGE BEGINS TO LOWER, THEN STOPS.
Step 1. Check for loose or leaking hydraulic connections. Reconnect hydraulic connections. Tighten loose connections. Replace defective lines or hoses.
Step 2. Check hydraulic fluid level. Add hydraulic fluid as required.
Step 3. Check output of hydraulic pump on launcher. Perform repairs as required.
10. BRIDGE WILL NOT EXTEND FLAT PRIOR TO LAYING.
Step 1. Check hydraulic fluid level. Add hydraulic fluid as required.
Step 2. Check engine RPM. Set engine RPM at no less than 1800.
Step 3. Check hydraulic filter for obstruction. Remove obstruction.
11. BRIDGE ASSUMES AN UNUSUAL POSITION DURING LAUNCH/ RETRIEVAL.
Step 1. Check tongue connections at pinnacles. Ensure fit is tight. Cease operations and perform necessary repairs.
Step **2.** Check for proper mating of locking plugs to bridge. Disconnect and reseat tongue to diaphragm. Ensure locking plugs are properly seated.
Step **3.** Check for excessive wear or worn components. Cease operations and make necessary repairs.

Table 3-1. Troubleshooting - CONT

MALFUNCTION TEST OR INSPECTION CORRECTIVE ACTION
12. BRIDGE WILL NOT LIFT FROM LAUNCHED POSITION.
Step 1. Check all hydraulic quick-disconnects for obstructions. Disconnect, clean, and reconnect quick-disconnects.
Step 2. Check hydraulic lines/hoses for loose connections and/or leaks. Tighten as required. Repair leaks or replace defective part.
Step 3. Check hydraulic levels of launcher. Add hydraulic fluid as necessary.
13. BRIDGE RAISES FROM THE GROUND, BUT STOPS.
Step 1. Check for loose or leaking hydraulic connections. Reconnect hydraulic connections. Tighten loose connections. Replace defective lines or hoses.
Step 2. Check hydraulic fluid level. Add hydraulic fluid as required.
Step 3. Check output of hydraulic pump on launcher. Perform repairs as required.
14. BRIDGE WILL NOT RAISE TO FULL VERTICAL POSITION.
Step 1. Check for loose or leaking hydraulic connections. Reconnect hydraulic connections. Tighten loose connections. Replace defective lines or hoses.
Step 2. Check hydraulic fluid level. Add hydraulic fluid as required.
Step 3. Check output of hydraulic pump on launcher. Perform repairs as required.
15. BRIDGE WILL NOT LOWER TO BRIDGE SEAT.
Step 1. Check outrigger arms, cylinders, etc for obstruction. Remove obstruction.
Step 2. Check alignment of bridge to bridge seat. Reposition bridge on bridge seat.

Section V. MAINTENANCE PROCEDURES

3-7. INTRODUCTION. This section contains maintenance procedures for the bridge authorized by the Maintenance allocation Chart (Appendix B). Inspection, welding, rivet and bolt substitution, and repair instructions which are common to several repair procedures are included here to avoid repetition. Special or additional instructions applicable to a repair procedure are given with the particular repair procedure.

3-8. INSPECTION.

Inspect the bridge in accordance with the Preventive Maintenance Checks and Services (PMCS) listed in Section II of Chapter 2. Signs of stress, hairline cracks, or other damage may be hidden. A close inspection of sections, braces, couplings, and connecting hardware is required. Replace any item, part, or component whose structure or strength is in question.

3-9. CHECKS, ADJUSTMENTS, AND ALIGNMENTS. Follow the inspection procedures called out in the PMCS. Additional checks shall be made as necessary. There are no adjustments or alignments for the bridge.

3-10. RIVET AND BOLT SUBSTITUTION AND REPAIR.

a. General. The following procedures are the only authorized method for the removal of damaged rivets and the substitution of bolts, washers and nuts on the bridge. Repairs dealing with the removal and replacement of rivets and bolts on the bridge shall be IAW the paragraph. Rivets will not be replaced by operator/unit personnel. Damaged rivets will be replaced with bolts as defined in Table 3-2. Never use a bolt or piece of attaching hardware if the strength and hardness of that item does not meet the minimum requirements as set forth in this paragraph and these procedures.

WARNING

Use of nuts, bolts, and washers is only a temporary repair for damaged rivets. The bridge should be sent to Depot for re-riveting. Bolts will not provide the high strength connection required for extended normal operation. Structural failure and injury to personnel can result from the use of unauthorized hardware.

b. Rivet Replacement With Bolts.

(1) Carefully center-punch head of buttonhead and countersunk rivets. When removing pin rivets go to step (4).

(2) Carefully drill out the center of the rivet. For 3/4 in. rivet, use a 5/8 in. bit; for a 1/2 in. rivet, use a 3/8 in bit.

3-10. RIVET AND BOLT SUBSTITUTION AND REPAIR - CONT

WARNING

When using a hammer and a chisel, always wear gloves, goggles, and face protection equipment Chisels will shatter and the fragments may hit you in the eye, face or hand. Clear immediate work area of other personnel during procedure. In the event of a fragment striking the eye, do not rub the eye or attempt to remove the foreign particle. Seek immediate first aid.

(3) After drilling is complete, cut off the produced (or squeezed) head using a chisel.

NOTE

Step (4) is for removal of collars on pin rivets only.

(4) Remove collar from pin rivet by cutting the collar using a chisel.

(5) Punch out the remainder of the rivet.

(6) Install bolt, with plain washer, lock washer between the hex nut and the aluminum or steel material being held together.

(7) Torque nut (dry) to between 50 and 75 ft-lbs. A minimum of 1/3 in. of the bolt should protrude through the nut to allow for staking.

(8) Using center-punch or suitable means, stake the nut.

Table 3-2. Suitable Replacement Bolts, Nuts, and Washers for Temporary Replacement of Rivets.

RIVET	REPLACEMENT
NOTE	
All fasteners zinc plated. Diameters are after coating.	
1/2 in. Solid Flat-Top Countersunk Head (78), Type 7.	1/2 in. Flat Washer, MS21306-2, NSN: 5310-00-828-8946.
	1/2 in. Countersunk Bolt, Cross Recessed, Grade 8, UNC, Class 2A, ANSI-B-18.5, Zinc Coated, (length as required).
	1/2 in. Extra Duty Helical Spring-Lock Washer, MS35340-48, NSN: 5310-00-834-7606
	1/2 in. Hex Plain Nut, Grade 8, UNC, Class 2B, ANSI-B18.2.2, Zinc Coated.
3/4 in. Solid Flat-Top Countersunk Head (78), Type 7.	3/4 in. Flat Washer, FF-W-92, MS27183-24, NSN: 5310-00-809-8536

Table 3-2. Suitable Replacement Bolts, Nuts, and Washers for Temporary Replacement of Rivets - CONT

RIVET	REPLACEMENT
	3/4 in. Countersunk Bolt, Cross Recessed, Grade 8, UNC. Class 2A, ANSI-B-18.5, Zinc Coated, (length as required).
	3/4 in. Extra Duty Helical Spring-Lock Washer, MS35340-51, NSN: 5310-00-052-6454
	3/4 in. Hex Plain Nut, Grade 8, UNC, Class 2B, ANSI-B18.2.2, Zinc Coated.
3/4 in. Solid Buttonhead, Type 6.	3/4 in. Flat Washer, FF-W-92.
	3/4 in. Hex Screw, Grade 8, UNC, Class 2a, FF-B-575, Zinc Coated (length as required).
	3/4 in. Extra Duty Helical Spring-Lock Washer, MS35340-51, NSN: 5310-00-052-6454.
	3/4 in. Hex Plain Nut, Grade 8, UNC, Class 2B, ANSI-B18.2.2, Zinc Coated.

3-11. WELDING PROCEDURES.

a. General. Welding on the bridge is limited to the tie rod housings located on the extreme ends of the ramp sections. No other welding is authorized on the bridge. The bridge is constructed of a special alloy aluminum (ASTM 2014-T6) which, when heated, loses its structural strength. Unauthorized welding in specific areas and on certain components can result in the failure of the bridge, causing severe damage and injury to personnel. Follow the procedures given, deviations are not authorized.

WARNING

Welding produces fumes and gases that are hazardous and can cause injury. Avoid breathing fumes and gases. Ensure adequate ventilation. Arc rays can injure eyes and burn skin. Do not touch hot surfaces or heated components, serious burns may occur. Use protective clothing, welding helmet, and eye filter lens, Electrical shock can kill. Do not touch live electrical parts. (Refer to American National Standard 249.1, Safety in Welding and Cutting.)

CAUTION

The welding of 2014-T6 aluminum, torch cutting of rivet heads, or the use of any procedure that involves the application of heat to this alloy in prohibited as the structural integrity will be jeopardized.

3-11. WELDING PROCEDURES - CONT

b. Procedures.

(1) Remove damaged pipe by cutting it off with a torch or ARC cutting process,

(2) After cutting, clean up steel surfaces that new pipe is to be welded to by grinding, or otherwise, remove flash or spatter.

(3) Weld new pipe in place as illustrated. The pipe used should be 60 5/8 in. long x 2 1/2 in. nominal diameter, extra strong, ASTM A 120 steel (or steel of equivalent or greater strength). The welding electrode should be AWS A5.1, Class E 7018 electrode.

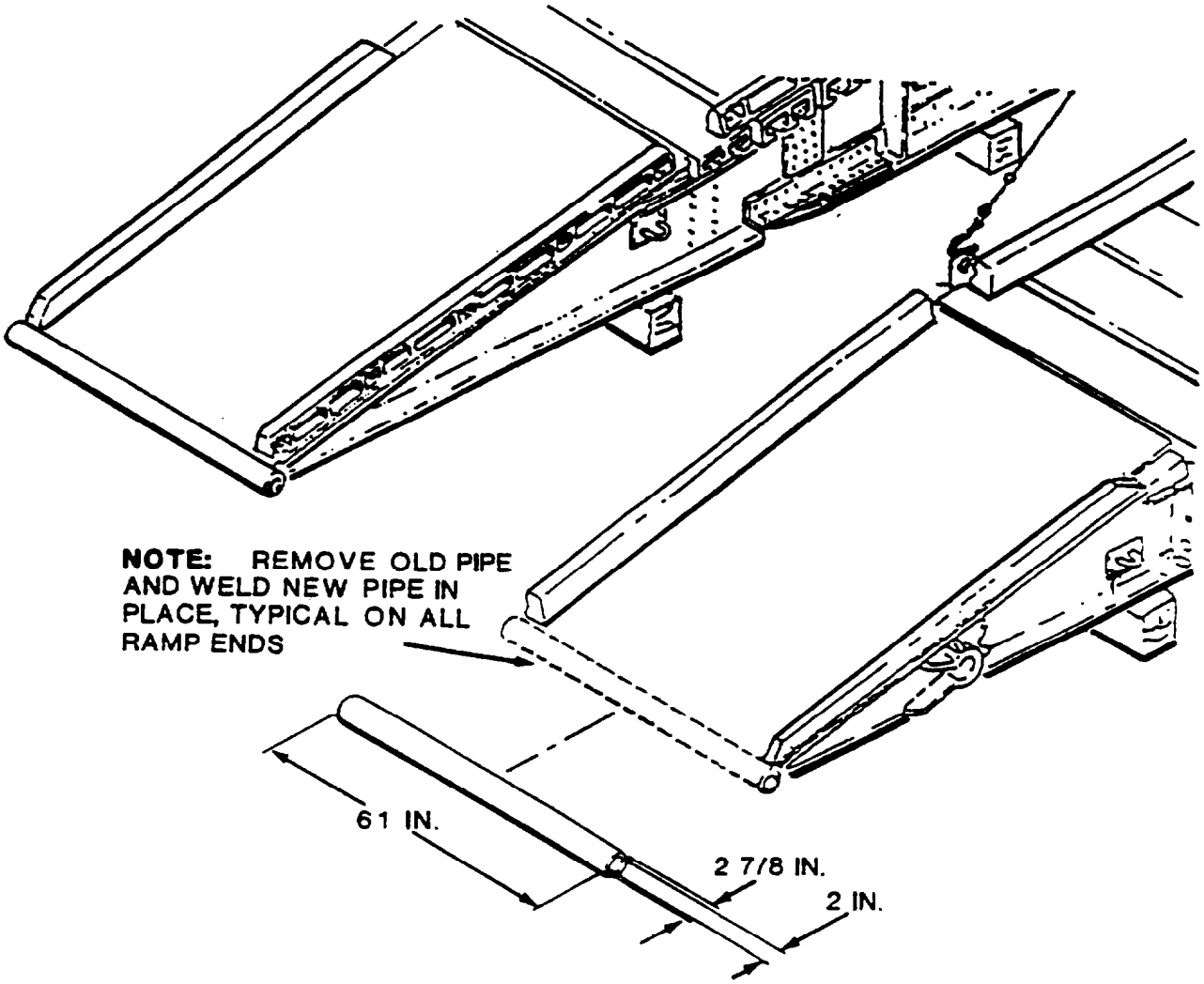

Welded Pipe Replacement

3-12. MAINTENANCE INSTRUCTIONS FOR MLC60.

SECTION INDEX

PROCEDURE	PAGE
Tie Rod Replacement..	3-13
Cable Beam Replacement..	3-14
Deck Curb Replacement	3-16
End Panel Curb Replacement	3-17
Ramp Curb Replacement	3-18
Inside Curb Replacement	3-19
Scissoring Cables and Attaching Hardware Replacement..	3-20
Hydraulic Cylinder Replacement..	3-23
Miscellaneous Hydraulic Cylinder Components Replacement	3-26
Hydraulic Cylinder Hydraulic Lines and Fittings Replacement..	3-28
Cylinder Beam Replacement	3-31
Flexible Hydraulic Lines Replacement (Diaphragm & Hydraulic Cylinder)	3-32
Ramp Section Lateral Brace (Near-Shore and/or Far-Shore) Replacement	3-34
Near-Shore Ramp Section Transverse Brace Replacement..	3-35
Far-Shore Ramp Section Transverse Brace Replacement	3-36
Near-Shore Center Section Transverse Brace Replacement..	3-37
Far-Shore Center Section Transverse Brace Replacement	3-39
Quadrant Replacement..	3-43
Near-Shore Ramp Section Replacement	3-46
Far-Shore Ramp Section Replacement	3-48
Near-Shore Diaphragm Replacement	3-50
Far-Shore Diaphragm Replacement	3-51
Ramp Section Deck Extrusion Replacement	3-52
Ramp Section Hard Hydraulic Line Replacement..	3-56
Ramp Section Miscellaneous Components Replacement..	3-58
Near-Shore Center Section Replacement	3-60
Far-Shore Center Section Replacement	3-64
Center Section Deck Extrusion Replacement	3-68
Center Section Hard Hydraulic Piping Replacement	3-71
Center Section Miscellaneous Components Replacement..	3-74

TIE ROD REPLACEMENT

TOOLS/EQUIPMENT: General Mechanics Tool Box SC5180-90-N26

SUPPLIES: None.

EQUIPMENT CONDITIONS: None.

PERSONNEL: Two

REMOVAL

CAUTION

Damaged threaded rods and nuts may require heat to free nuts for removal or may require cutting in order to remove. Apply heat only to the steel portion of the tie rod housing as the application of heat to the special alloy aluminum of the bridge will weaken the structure.

REMOVE TIE ROD (3).

NOTE

Tie rod (3) may be removed from either side.

a. Remove nut (1) and flat washer (2) from end of threaded tie rod (3).

b. Slide threaded tie rod (3) out tie rod housing (4) from opposite tie rod housing (5) freeing ramp spacer (6).

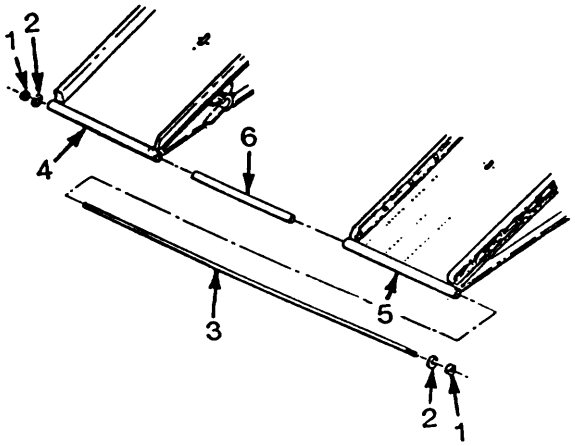

INSTALLATION

INSTALL TIE ROD (3).

a. Install one flat washer (2) and one nut (1) on end of threaded tie rod (3). Slide threaded tie rod (3) through either end of tie rod housings (4) or (5).

b. Install ramp spacer (6) before installing end of threaded tie rod (3) through center area of housings as shown.

c. Install second flat washer (2) and nut (1) on exposed end of threaded tie rod (3).

d. Tighten two nuts (l).

END OF TASK

CABLE BEAM REPLACEMENT (Sheet 1 of 2)

TOOLS/EQUIPMENT General Mechanics Tool Box SC 5180-90-N26

SUPPLIES: None.

EQUIPMENT CONDITIONS: None.

PERSONNEL: Two

REMOVAL

REMOVE CABLE BEAM (4).

WARNING

The scissoring cables, equalizer plate, and pin are heavy. They could slip and fall and crush hands or feet. Stay clear of cables and equalizer plate.

NOTE

Block or brace quadrant to preclude shifting during procedure.

a. Remove equalizer plate retainer pin (1) holding equalizer plate pin (2) and equalizer plate (3) in position in cable beam (4).

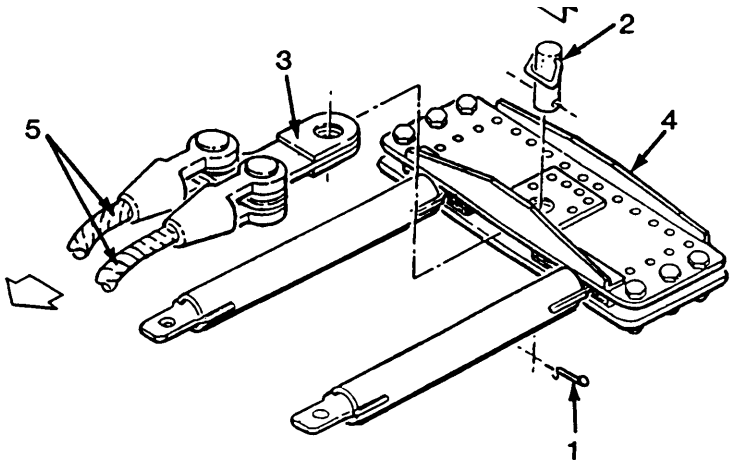

NOTE

Have a second crew member steady the cables/equalizer plate for the following step

b. Remove equalizer plate pin (2) from cable beam (4) releasing equalizer plate (3).

c. Pull cables (5) and equalizer plate (3) clear of cable beam (4).

d. Remove retainer (6) securing nut (7) to bolt (8). Remove nut (7) from bolt (8) securing quadrant strut (9) to cable beam (4). Remove bolt (8). Remove quadrant strut (9).

e. Repeat step d. for second strut (9).

f. Remove three retainers (10), three nuts (11), and three bolts (12) securing cable beam (4) to far-shore center section clip angles.

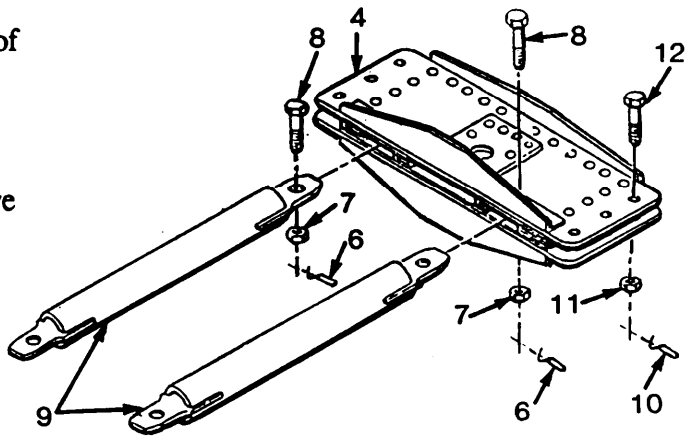

CABLE BEAM REPLACEMENT (Sheet 2 of 2)

g. Repeat step f. for opposite side of cable beam (4). Slide beam (4) clear of clip angles and quadrant struts (9). Set beam (4) aside.

INSTALLATION

INSTALL CABLE BEAM (4).

a. Position cable beam (4) on clip angles of center sections. Aline struts (9) to fit into slots located on cable beam (4). Slide cable beam (4) forward to aline holes in clip angles and **Struts (9).**

b. Install two bolts **(8) thru** cable beam (4) passing thru struts (9).

c. Install six bolts (12) thru clip angles of center section securing cable beam (4) in position.

d. Thread two nuts (7) on two bolts (8). Tighten nuts (7). Install two retainers (6) in two bolts (8).

e. Thread six nuts (11) on six bolts (12). Tighten nuts (11). Install six retainers (10) in six bolts (12).

f. Place equalizer plate (3) so hole alines in equalizer plate and cable beam (4). Install equalizer plate (3) to cable beam (4). Install equalizer plate retainer pin (1) in equalizer plate pin (2).

END OF TASK

DECK CURB REPLACEMENT

TOOLS/EQUIPMENT General Mechanics Tool Box SC 5180-90-N26

SUPPLIES: Lock Washer (item 5, Appendix E) (5 required)

EQUIPMENT CONDITIONS: None.

PERSONNEL: Two

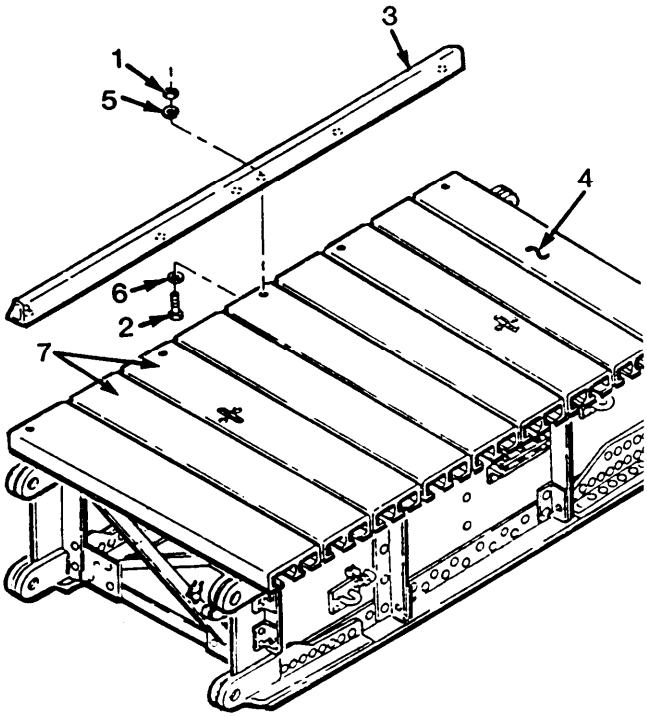

REMOVAL

REMOVE DECK CURB (3).

NOTE

Bolts securing center section deck curbs are installed from-the bottom side up and will fall out if not held. The two bolts located on either end of curb are shorter in length than those in the middle.

a. Remove five nuts (1) from five bolts (2) securing deck curb (3) to center, section (4).

b. Remove five lock washers (5) from five bolts (2). Remove five bolts (2) with five flat washers (6) installed from center section (4). Remove deck curb (3) from center section (4). Discard lock washers.

INSTALLATION

INSTALL DECK CURB (3).

NOTE

Deck curbs (7) have extra mounting holes located in base for use in allowing mounting on either side of center sections.

a. Position deck curb (3) so holes aline in curb and center section (4).

b. Install five flat washers (6) on five bolts (2). Insert bolts from the bottom of the deck extrusions up as shown. ”

c. Install five new lock washers (5) on bolts (2). Thread five nuts (1) on bolts (2).

d. Tighten five nuts (1) on bolts (2).

END OF TASK

END PANEL CURB REPLACEMENT

TOOLS/EQUIPMENT General Mechanics Tool Box SC 5 180-90-N26

SUPPLIES: Lock Washer (item 5, Appendix E) (5 required)

EQUIPMENT CONDITIONS: None.

PERSONNEL: Two

REMOVAL

REMOVE END PANEL CURB (3).

NOTE

End panel curbs have extra mounting holes located in base for use in allowing mounting on either side of end panels.

a. Remove four nuts (1) from four bolts (2) securing end panel curb (3) to end panel (4).

b. Remove four lock washers (5) from four bolts (2). Remove four bolts (2) with four flat washers (6) installed from end panel (4). Remove end panel curb (3) from end panel (4). Discard lock washers (5).

c. Remove nut (7) and lock washer (8) from short bolt (9). Remove bolt (9). Discard lock washer.

d. Remove flat washer (10) from bolt (9).

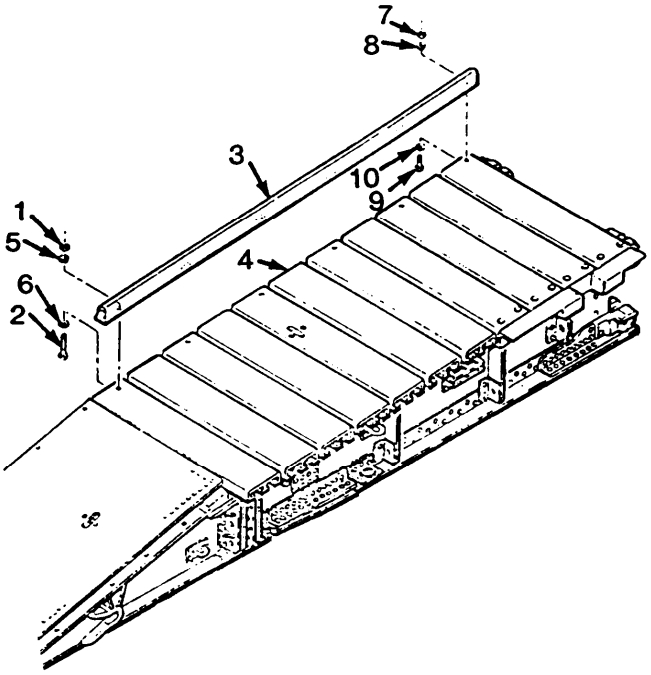

INSTALLATION

INSTALL END PANEL CURB (3).

a. Position end panel curb (3) so holes aline in curb and end panel (4).

b. Install four flat washers (6) on four bolts (2). Insert bolts from the bottom of the deck extrusions up as shown.

c. Install four new lock washers (5) on bolts (2). Thread four nuts (1) on bolts (2).

d. Tighten four nuts (1) on bolts (2). Tighten four nuts (l).

e. Place flat washer (10) on bolt (9). Install bolt (9) in end panel and curb (3) from bottom up.

f. Install new lock washer (8) on bolt (9). Thread nut (7) on bolt (9). Tighten nut/bolt assembly.

END OF TASK

RAMP CURB REPLACEMENT

TOOLS/EQUIPMENT General Mechanics Tool Box SC 5180-90-N26

SUPPLIES: Lock Washer (item 5, Appendix E) (6 required)

EQUIPMENT CONDITIONS: None.

PERSONNEL: Two

REMOVAL

REMOVE RAMP CURB (4).

a. Remove four nuts (1) and four bolts (2). from ramp curb (3). Remove four lock washers (4) from bolts (2). Discard lock washers (4).

b. Remove bolt (5) with attached lock washer (4) from curb (3). Remove ramp curb (3). Discard lock washer (4).

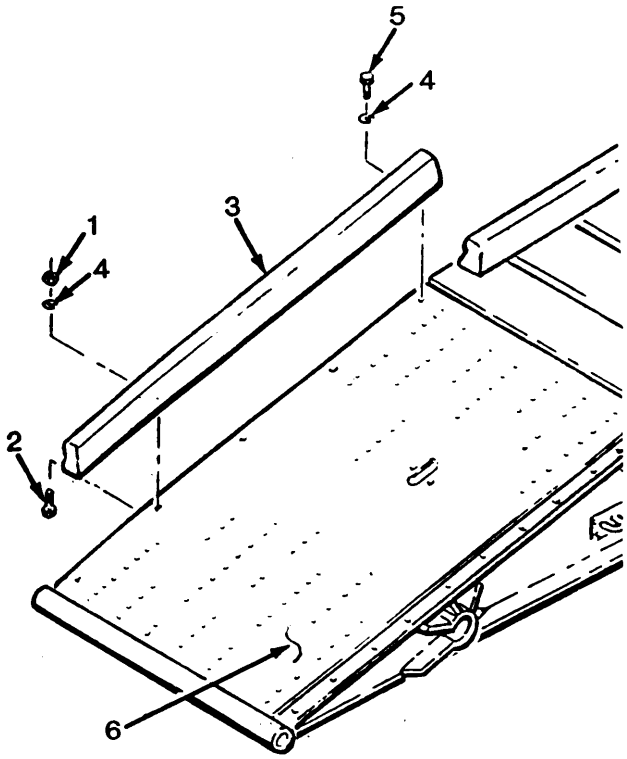

INSTALLATION

INSTALL RAMP CURB (4).

a. Place ramp curb (3) on end ramp (6). Aline holes in ramp curb with those in end ramp.

b. Thread bolt (5) with attached flat washer into threaded socket in end of curb (3) and end ramp (6) and tighten.

c. Insert four bolts (2) from the bottom side of end ramp (6) Up through end ramp and ramp curb (3).

d. Install four new lock washers (4) on installed four bolts (2).

e. Thread four nuts (1) on four bolts (2) and tighten.

END OF TASK

INSIDE CURB REPLACEMENT

TOOLS/EQUIPMENT: General Mechanics Tool Box SC 5180-90-N26

SUPPLIES: None.

EQUIPMENT CONDITIONS: None.

PERSONNEL: Two

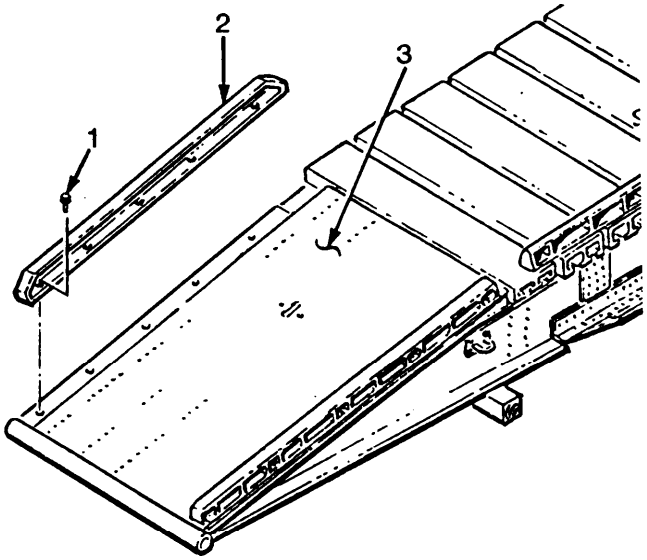

REMOVAL

REMOVE INSIDE CURB (2).

a. Remove five bolts (1) securing inside curb (2) to end ramp (3).

b. Remove inside curb (2).

INSTALLATION

INSTALL INSIDE CURB (2).

a. Place inside curb (2) on end ramp (3). Aline holes in inside curb with those of end ramp.

b. Install five threaded bolts through inside curb and into end ramp securing curb (2) to end ramp (3). Tighten five bolts (l).

END OF TASK

SCISSORING CABLES AND ATTACHING HARDWARE REPLACEMENT (Sheet 1 of 3)

TOOLS/EQUIPMENT: General Mechanics Tool Box SC5180-90-N26
Lifting Device (500 lbs capacity)
Sling, Multiple Leg

SUPPLIES: None.

EQUIPMENT CONDITIONS: None.

PERSONNEL: Two

REMOVAL

REMOVE SCISSORING CABLES AND ATI'ACHING HARDWARE.

a Remove two retainers (1) from one side of two pins (2) holding cable retainer (3) in position on quadrant (4).

b. Remove two pins (2) from flanges (5) of quadrant (4) releasing cable retainer (3).

c. Remove cable retainer (3) holding cables (6) in grooves of quadrant.

WARNING

The scissoring cables are heavy and can crush you. Stay clear of the cables when they are suspended.

d. Attach a lifting sling to about the center of cables (6) and lift until slack is removed.

e. Remove equalizer plate retainer pin (7) holding equalizer plate pin (8) and equalizer plate (9) in position in cable beam (10).

f. Have a second crew member steady the cables/equalizer plate assembly and remove equalizer plate pin (8) from cable beam (10) releasing equalizer plate (9).

g. Move to cylinder end of cables (11).

h. Remove equalizer plate retainer pin (12) from equalizer plate pin (13) holding equalizer plate (14) in position on rod end (15) of hydraulic cylinder (16).

i. Remove equalizer plate pin (13) releasing equalizer plate (14) and cables (11) from rod end (15) of hydraulic cylinder (16).

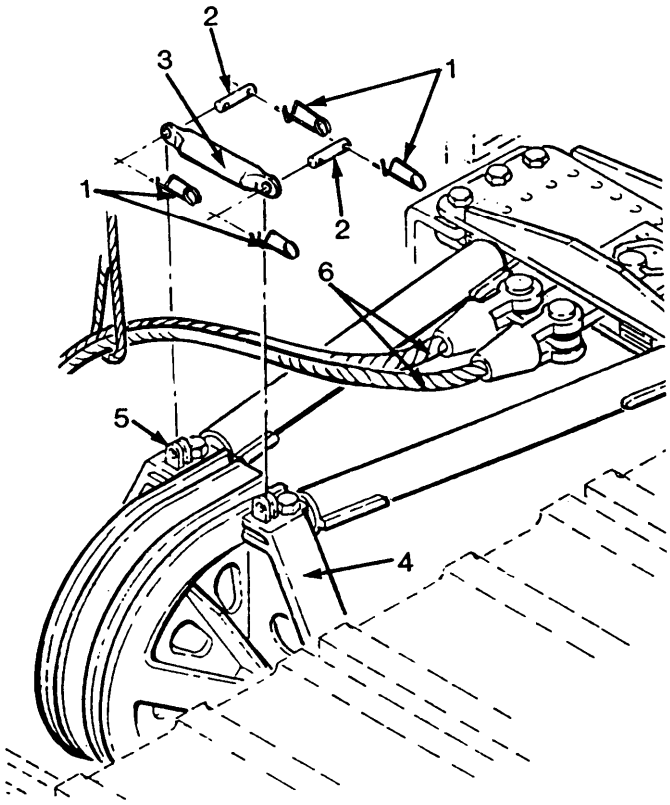

SCISSORING CABLES AND ATTACHING HARDWARE REPLACEMENT (Sheet 2 of 3)

j. Lift cables (11) from bridge and set aside.

INSTALLATION

INSTALL SCISSORING CABLES AND ATTACHING HARDWARE.

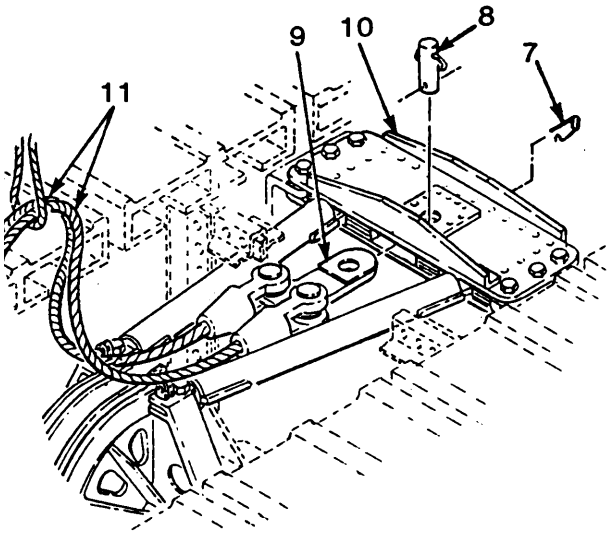

WARNING

The scissoring cables are heavy and can crush you. Stay clear of the cables when they are suspended.

CAUTION

The direction of rotation of the cable strands are critical. The left cable is not designed for use on the right and vice versa. Note rotation of the strands of cable when replacing cables, check the current placement with Detail A and B as shown, and ensure they are installed properly.

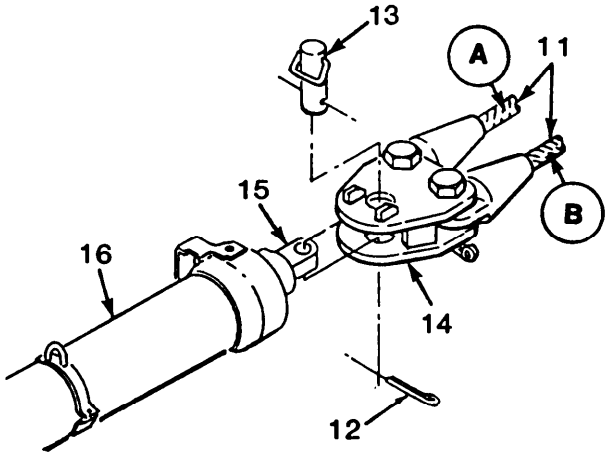

a. Using lifting device and a sling attached to the approximate center of cables, lower cables in position so the equalizer plates will mate. Route cables through transverse braces as necessary for clearance.

b. Insert flat end of equalizer plate (9) into cavity located on cable beam (10). Install equalizer plate pin (8) in cable beam (10) securing equalizer plate and attached cables (11).

c. Install equalizer plate retainer pin (7) in pin (8).

d. Place flanges of equalizer plate (14) over the rod end (15) of hydraulic cylinder (16). Install equalizer plate pin (13) in equalizer plate securing plate (14) with cables (11) to rod end (15).

e. Install equalizer plate retainer pin (12) in pin (13).

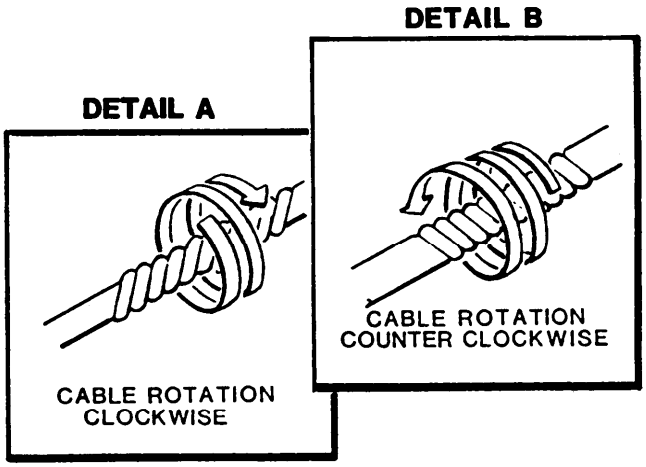

SCISSORING CABLES AND ATTACHING HARDWARE REPLACEMENT (Sheet 3 of 3)

f. Install cable retainer (3) in flanges (5) of quadrant (4) securing cables (6) in position.

g. Install two pins (2) through flanges (5) locking cable retainer (3) in position.

h. Install two pin retainers (1) in two pins (2). If second two pin retainers (1) were removed, install second two pin retainers (1) in opposite ends of pins (2).

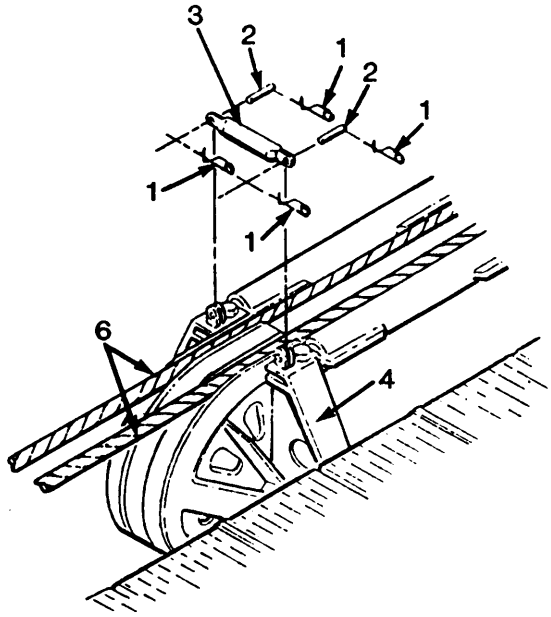

END OF TASK

HYDRAULIC CYLINDER REPLACEMENT (Sheet 1 of 3)

TOOLS/EQUIPMENT	General Mechanics Tool Box SC5180-90-N26 Lifting Device (2000 lb capacity) Sling, Multiple Leg
SUPPLIES	None.
EQUIPMENT CONDITIONS:	None.
PERSONNEL:	Three

REMOVAL

REMOVE HYDRAULIC CYLINDER (5).

a. Support equalizer plate (1) to keep it from falling. Remove cotter key (2) from equalizer plate pin (3). Remove pin (3) securing rod end (4) of cylinder (5) to equalizer plate (1).

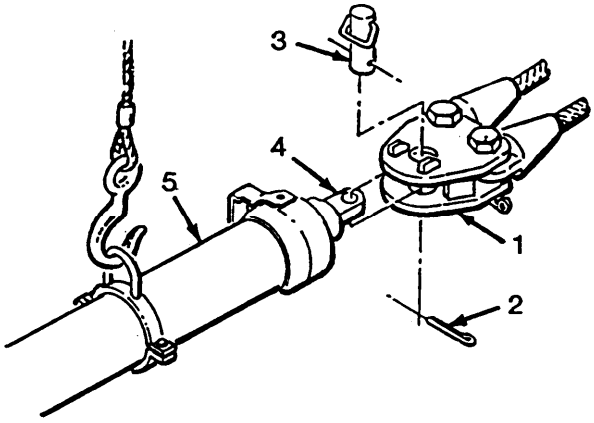

WARNING

FRH hydraulic fluid may contain Tricresyl Phosphate (TCP) which, if taken internally, can cause paralysis.Hydraulic fluid may be absorbed through the skin. If hydraulic fluid gets on skin, wash with soap and water as soon as possible.

b. Release hydraulic pressure by turning manual hydraulic bleed valves (6) and (7) located within the protective housings (8) on both ends of hydraulic cylinder (5).

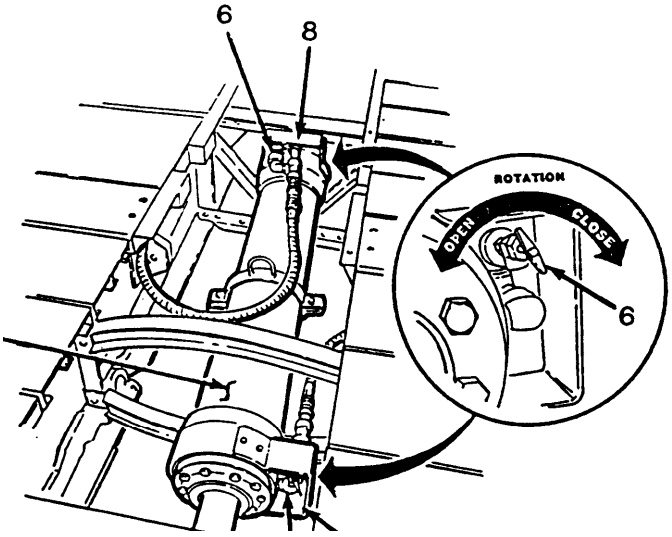

HYDRAULIC CYLINDER REPLACEMENT (Sheet 2 of 3)

c* Disconnect hydraulic cylinder hydraulic line (9) from connecting point (10) located on center section (11). Disconnect other end of line (9) from connecting point (12) located on hydraulic cylinder (5).

d. Disconnect hydraulic cylinder hydraulic line (13) from connecting point (14) located on center section (15). Disconnect other end of line (13) from connecting point (16) located on hydraulic cylinder (5).

e. Remove two bolts (17) securing upper hydraulic cylinder support (18) to center sections (11 and 15). Remove support (18).

f. Remove four bolts and slide transverse brace (19) over cylinder cap end (20). Refer to page 3-36.

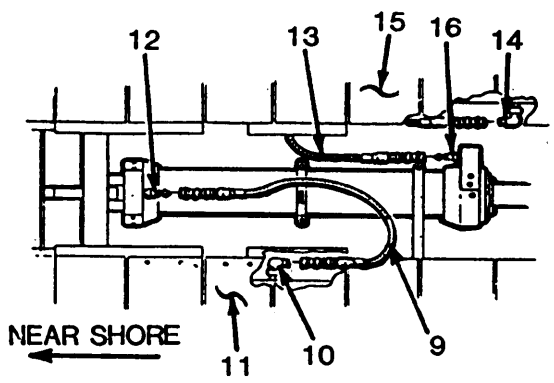

WARNING

The hydraulic cylinder and pins are heavy. They could slip and fall and crush hands or feet. Stay clear of cylinder, pins, etc.

g. Attach a lifting sling (21) to hydraulic cylinder upper bracket assembly (22). Take up the slack in the cable using lifting device.

h. Remove one cotter pin (23) from hydraulic cylinder pin (24). Remove pin (24) releasing hydraulic cylinder (5) from cylinder beam (25).

i. Using lifting device, lift hydraulic cylinder (5) from center sections and set aside.

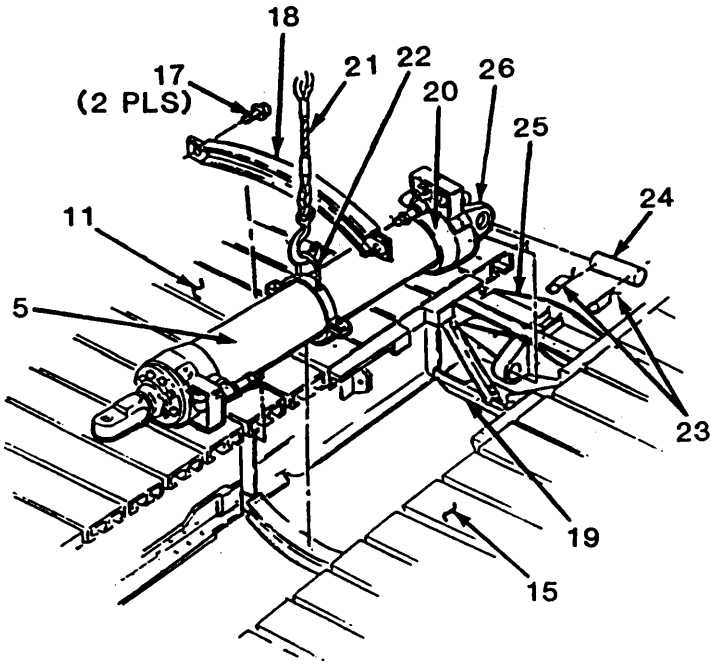

INSTALLATION

INSTALL HYDRAULIC CYLINDER (5).

a. Attach lifting sling (21) to hydraulic cylinder upper bracket assembly (22).

b. Swing hydraulic cylinder into position between center sections (11) and (15) as shown.

HYDRAULIC CYLINDER REPLACEMENT (Sheet 3 of 3)

Aline cap end (20) of hydraulic cylinder (5) with flange (26) of cylinder beam (25). Install hydraulic cylinder pin (24) securing cylinder (5) to cylinder beam (25). Install cotter pin (23) in pin (24).

Position hydraulic cylinder support (18) in position in clip angles of center sections (11) and (15). Install two bolts (17) in support (18). Tighten two bolts (17).

Position bottom and top flanges of equalizer plate (1) over rod end (4) of hydraulic cylinder (5). Aline holes in both.

Insert equalizer plate pin (3) in equalizer plate (1) and through rod end (4).

Install cotter key (2) in pin (3).

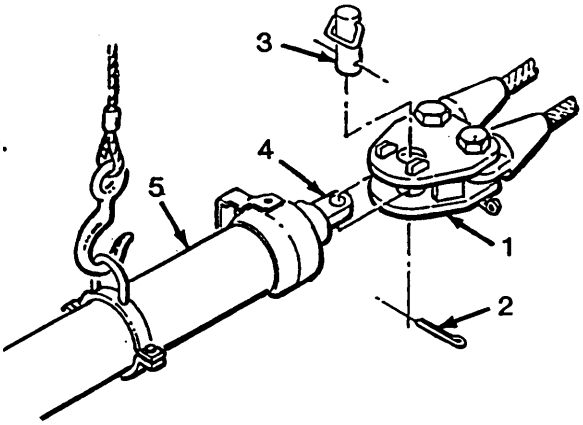

WARNING

FRH hydraulic fluid may contain Tricresyl Phosphate (TCP) which, if taken internally, can cause paralysis. Hydraulic fluid may be absorbed through the skin. If hydraulic fluid gets on skin, wash with soap and water as soon as possible.

Connect hydraulic cylinder hydraulic line (9) to connection point (10) located on center section (11). Connect other end of line (9) to connecting point (12) located on hydraulic cylinder (5).

Connect hydraulic cylinder hydraulic line (13) to connection point (14) located on center section (15). Connect other end of line (13) to connecting point (16) located on hydraulic cylinder (5).

Be sure manual hydraulic bleed valves (6) and (7) located under protective housings (8) on hydraulic cylinder (5) are closed.

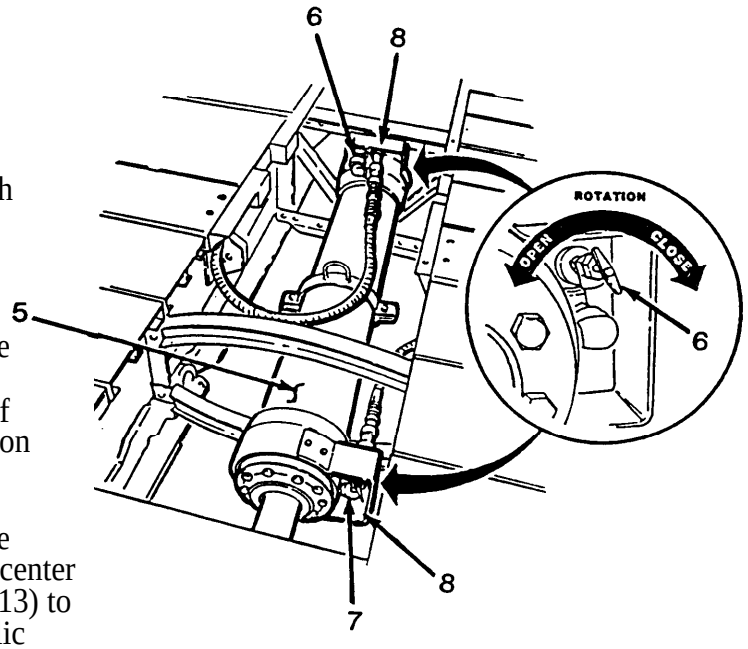

END OF TASK

MISCELLANEOUS HYDRAULIC CYLINDER COMPONENTS REPLACEMENT
(Sheet 1 of 2)

TOOLS/EQUIPMENT	General Mechanics Tool Box SC 5180-90-N26
SUPPLIES:	Lock Washer (item 4, Appendix E) (8 required) Lock Washer (item 5, Appendix E) (2 required) Loctite, Pneumatic/Hydraulic Seal "569" (item 3, Appendix D)
EQUIPMENT CONDITIONS:	Scissoring Cables and attaching hardware removed (pg 3-20). Hydraulic Cylinder removed (pg 3-23).

REMOVAL

REMOVE MISCELLANEOUS HYDRAULIC CYLINDER COMPONENTS.

a. Remove two screws (1) and two lock washers (2) securing one end of shield assembly (3) to rod end (4) of hydraulic cylinder (5). Discard lock washers.

b. Remove remaining two screws (1) and two lock washers (2) securing remaining end of shield assembly (3) to rod end (4) of hydraulic cylinder (5). Discard lock washers.

c. Remove shield assembly (3) from hydraulic cylinder (5).

d. Repeat steps a. thru c. for second shield assembly (6) located on cap end (7) of hydraulic cylinder (5). Discard lock washers (2).

e. Remove nut (8) and lock washer (9) from screw (10) securing one side of lower retaining strap (11) and upper bracket assembly (12) to hydraulic cylinder (5). Discard lock washer.

f. Remove screw (10).

g. Repeat steps e. and f. for opposite side of lower retaining strap (11) and upper bracket assembly (12). Discard lock washer (9).

h. Remove lower retaining strap (11) and upper bracket assembly (12) from hydraulic cylinder (5).

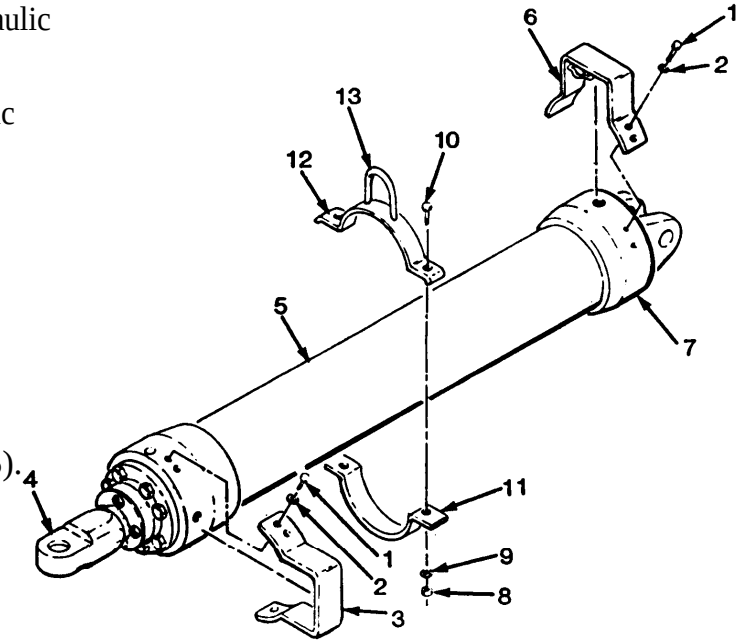

MISCELLANEOUS HYDRAULIC CYLINDER COMPONENTS REPLACEMENT
(Sheet 2 of 2)

INSTALLATION

INSTALL MISCELLANEOUS HYDRAULIC CYLINDER COMPONENTS.

a. Place new lock washer (2) on screw (1). Position shield assembly (3) on rod end (4) of hydraulic cylinder (5).

b. Insert screw (1) through shield assembly (3) and thread screw (1) into hydraulic cylinder (5).

c. Repeat step a. for three remaining screws (1) using new lock washers (2).

d. Repeat steps a. thru c. for second shield assembly (6) on cap end (7) of hydraulic cylinder (5).

e. Position upper bracket assembly (12) centered on top of hydraulic cylinder (5) as shown. Mate lower retaining strap (11) with bracket assembly (12). Aline holes in bracket (12) and strap (11).

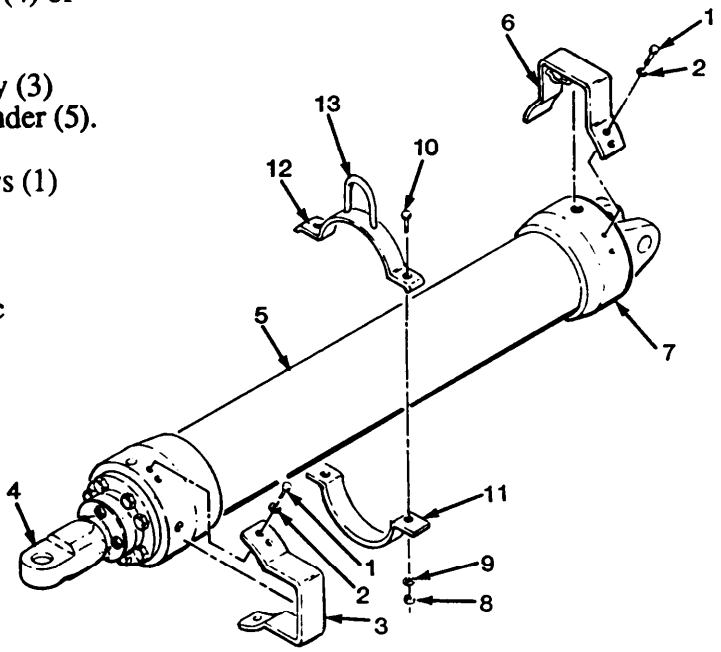

f. Insert screw (10) in mounting holes of upper bracket assembly (12). Place new lock washer (9) on screw (10). Thread nut (8) on screw (10). Repeat for opposite side.

g. Be sure lifting ring (13) of upper bracket assembly (12) is in the top most position as shown, centered equally between each end of hydraulic cylinder (5).

h. Tighten two nuts (8).

END OF TASK

HYDRAULIC CYLINDER HYDRAULIC LINES AND FITTINGS REPLACEMENT
(Sheet 1 of 3)

TOOLS/EQUIPMENT General Mechanics Tool Box SC 5180-90-N26

SUPPLIES: None.

EQUIPMENT CONDITIONS: None.

PERSONNEL: Two

WARNING

FRH hydraulic fluid may contain Tricresyl Phosphate (TCP) which, if taken internally, can cause paralysis. Hydraulic fluid may be absorbed through the skin. If hydraulic fluid gets on skin, wash with soap and water as soon as possible.

CAUTION

It is critical that special care be taken not to flatten, score, or otherwise damage the threads of useable components during the removal and installation procedures.

NOTE

. Due to the large number of fittings and varying lengths of pipe, the following procedures are written in a general manner. Removal of any piping or fitting requires the counterclockwise rotation of the component to be removed. Replacement of that component requires the clockwise rotation. All piping and fittings are National Pipe Thread (NPT). Consideration must be given as to how to reach the defective component and how it is to be removed.

- A fitting, for example, located in the center of several other fittings and piping cannot be removed without the removal of other components that may not be damaged. Removal of hard piping and fittings requires disassembly beginning at the nearest end of the fittings or pipings to the damaged component. After removal of one component in the line, then the next, and the next, until the damaged component is reached and can be removed.

REMOVAL

REMOVE HYDRAULIC CYLINDER HYDRAULIC

a. Remove half quick-disconnect coupling (1) from straight pipe adapter (2). Retain hydraulic cap assembly (3) for reuse.

b. Remove straight pipe adapter (2) from rubber hose assembly (4).

c. Remove rubber hose assembly (4) from straight pipe adapter (5). Retain hydraulic cap assembly (3) for reuse.

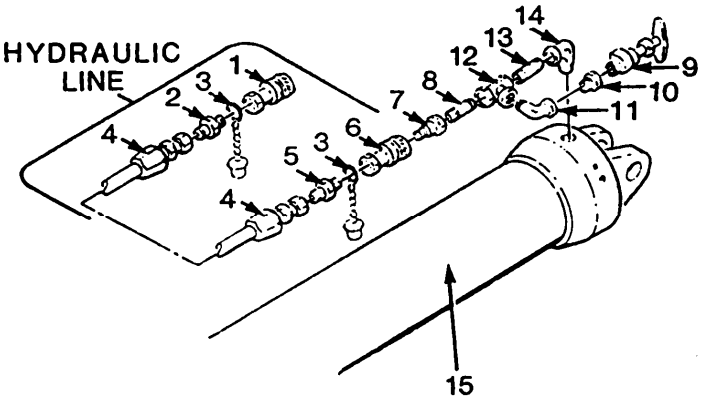

HYDRAULIC CYLINDER HYDRAULIC LINES AND FITTINGS REPLACEMENT
(Sheet 2 of 3)

d. Remove straight pipe adapter (5) from half quick-disconnect coupling (6).

e. Remove half quick-disconnect coupling (6) from second half quick-disconnect coupling (7).

f. Remove second half quick-disconnect coupling (7) from pipe (8).

g. Remove angle valve (9) from pipe fitting (10).

h. Remove pipe fitting (10) from elbow (11).

i. Remove elbow (11) from tee (12).

j. Remove tee (12) from pipe (13).

k. Remove pipe (13) from elbow (14).

l. Remove elbow (14) from hydraulic cylinder (15).

m. Repeat for the opposite end.

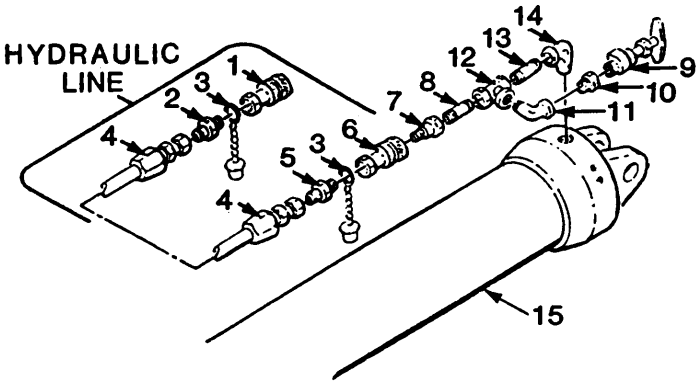

INSTALLATION

INSTALL HYDRAULIC CYLINDER HYDRAULIC LINES AND FITTINGS.

NOTE

It is critical that special care be taken not to flatten, score, or otherwise damage the threads of useable components during the replacement procedures. Apply Loctite Pneumatic/ Hydraulic Seal "569" (or equivalent) to the threads of all pipe and fittings prior to installation.

a. Thread elbow (14) in cap end of hydraulic cylinder (15) as shown.

b. Thread pipe (13) in elbow (14).

c. Thread tee (12) on pipe (13).

d. Thread angle valve (9) in pipe fitting (10).

e. Thread elbow (11) in tee (12).

HYDRAULIC CYLINDER HYDRAULIC LINES AND FITTINGS REPLACEMENT
(Sheet 3 of 3)

WARNING

FRH hydraulic fluid may contain Tricresyl Phosphate (TCP) which, if taken internally, can cause paralysis. Hydraulic fluid may be absorbed through the skin. If hydraulic fluid gets on skin, wash with soap and water as soon as possible.

f. Thread pipe fitting (10), with angle valve (9) installed, in elbow (11).

g. Thread pipe (8) in tee (12). Thread half quick-disconnect coupling (7) on pipe (8).

h. Connect half quick-disconnect coupling (7) to second half quick-disconnect coupling (6).

i. Install hydraulic cap assembly (3) on straight pipe adapter (5).

j. Thread pipe adapter (5) in assembled quick-disconnect couplings (7 and 8).

k. Thread rubber hose assembly (4) on straight pipe adapter (5).

l. Thread straight pipe adapter (2) in other end of rubber hose assembly (4).

m. Install hydraulic cap assembly (3) on installed straight pipe adapter (2).

n. Secure cap assembly (3) by threading half quick-disconnect coupling on straight pipe adapter (2).

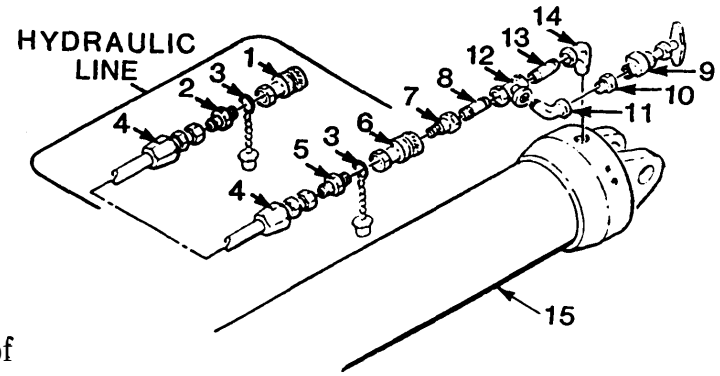

END OF TASK

CYLINDER BEAM REPLACEMENT

TOOLS/EQUIPMENT General Mechanics Tool Box SC 5180-90-N26

SUPPLIES: None

EQUIPMENT CONDITIONS: Scissoring Cables and attaching hardware removed (pg 3-20).
Hydraulic Cylinder removed (pg 3-23).
Ramp Section Lateral Brace removed (pg 3-34).
Near-Shore Ramp Section Transverse Braces removed (pg 3-35).
Quadrant removed (pg 3-43).
Near-Shore Ramp Section removed (pg 3-46).

PERSONNEL: Two

REMOVAL

REMOVE CYLINDER BEAM (4).

a. Remove six bolt retainers (1) from bolts (2)

b. Remove six nuts (3) from bolts (2) securing cylinder beam (4) to clip angles of ramp sections (5 and 6).

c. Remove cylinder beam (4) from ramp sections (5 and 6).

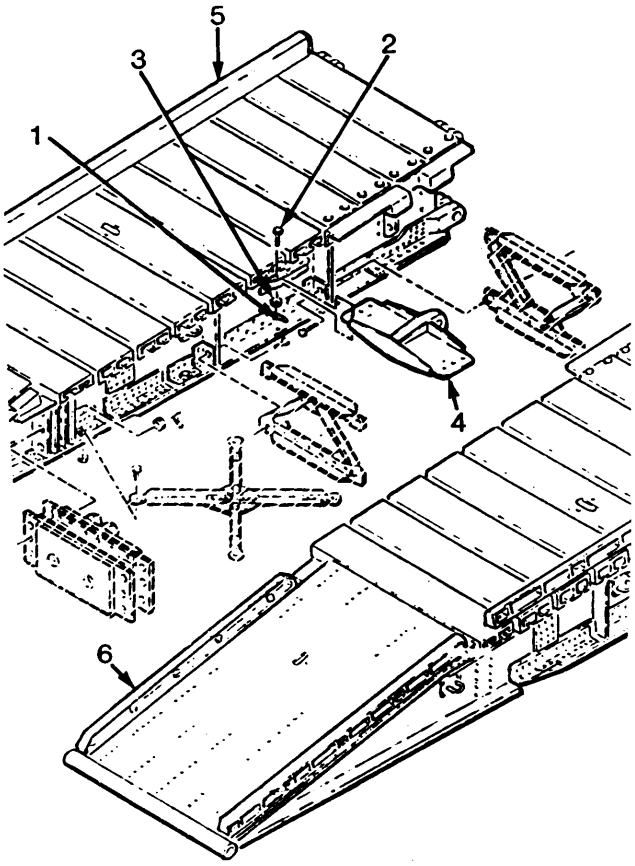

INSTALLATION

INSTALL CYLINDER BEAM (4).

a. Position cylinder beam (4) on clip angles of ramp sections (5 and 6) and aline bolt holes.

b. Install six bolts (2) securing cylinder beam (4) to clip angles of ramp sections (5 and 6).

c. Thread six nuts (3) on bolts (2).

d. Install six retainers (1) on bolts (2).

END OF TASK

FLEXIBLE HYDRAULIC LINES REPLACEMENT
(DIAPHRAGM AND HYDRAULIC CYLINDER) (Sheet 1 of 2)

TOOLS/EQUIPMENT: General Mechanics Tool Box SC 5180-90-N26

SUPPLIES: None.

EQUIPMENT CONDITIONS: None.

PERSONNEL: One

REMOVAL

REMOVE FLEXIBLE HYDRAULIC LINES ON DIAPHRAGM AND HYDRAULIC CYLINDER.

WARNING

FRH hydraulic fluid may contain Tricresyl Phosphate (TCP) which, if taken internally, can cause paralysis. Hydraulic fluid may be absorbed through the skin. If hydraulic fluid gets on skin, wash with soap and water as soon as possible.

a. Grasp the outer ring (1) of the female connector (2) at the end of the hydraulic line (3) and pull the outer ring away from the male connector (4). Outer ring (1) will slide back about 1/2 in. releasing hydraulic line (3).

b. Repeat step a. for opposite end of line (3).

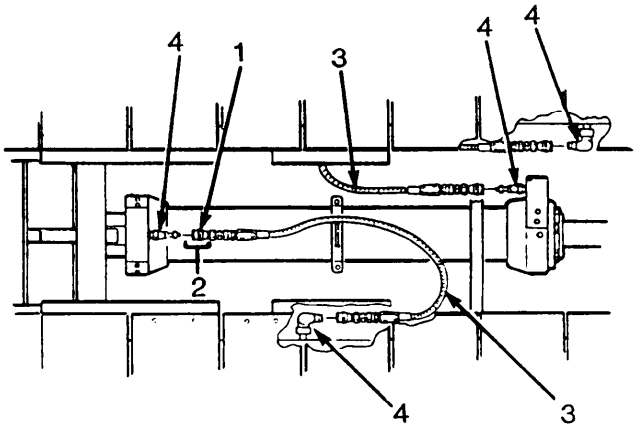

NOTE

Hydraulic line (5) located on diaphragm may require disassembly prior to removal.

c. Remove half quick-disconnect coupling (6) from pipe nipple (7).

d. Remove pipe nipple (7) from quick-discomect bracket (8). Replacement line will require the removal of half quick-discomect coupling (6) from pipe nipple (7) prior to installation.

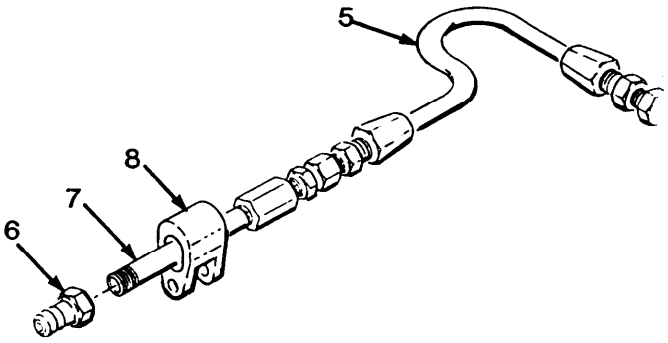

FLEXIBLE HYDRAULIC LINES REPLACEMENT (DIAPHRAGM AND HYDRAULIC CYLINDER) (Sheet **2** of 2)

INSTALLATION

INSTALL FLEXIBLE HYDRAULIC LINES ON DIAPHRAGM AND HYDRAULIC CYLINDER.

WARNING

FRH hydraulic fluid may contain Tricresyl Phosphate (TCP) which, if taken internally, can cause paralysis. Hydraulic fluid may be absorbed through the skin. If hydraulic fluid gets on skin, wash with soap and water as soon as possible.

a. Grasp the outer ring (1) of the female connector (2) at the end of the hydraulic line (3) and pull the outer ring back. Outer ring will slide back approximately 1/2 in.

b. With ring (1) in the retracted position, mate ring with male connector (4) inserting male connector in the female connector (2). Release outer ring (1) locking the two connectors together. Pull slightly on the coupling to be sure the connection is secure.

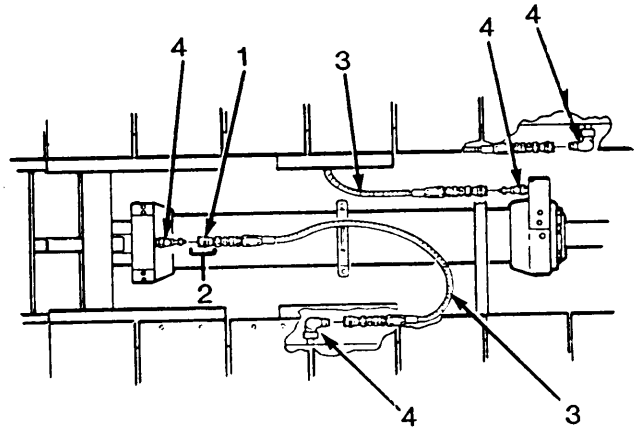

NOTE

Diaphragm hydraulic lines may require disassembly prior to replacement.

c. Hydraulic line (5) must have half quick-disconnect coupling (6) removed from pipe nipple (7) prior to installation.

d. Insert nipple (7) through quick-disconnect bracket (8) located on the diaphragm (not shown). Thread half quick-disconnect coupling (6) on nipple (7) and tighten. Connect opposite end in the same manner as for hydraulic cylinder line above.

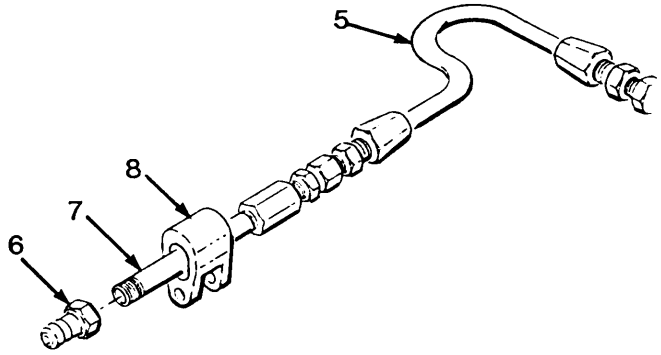

END OF TASK

RAMP SECTION LATERAL BRACE (NEAR-SHORE AND/OR FAR-SHORE) REPLACEMENT

TOOLS/EQUIPMENT: General Mechanics Tool Box SC 5180-90-N26

SUPPLIES: None.

EQUIPMENT CONDITIONS: None.

PERSONNEL: One

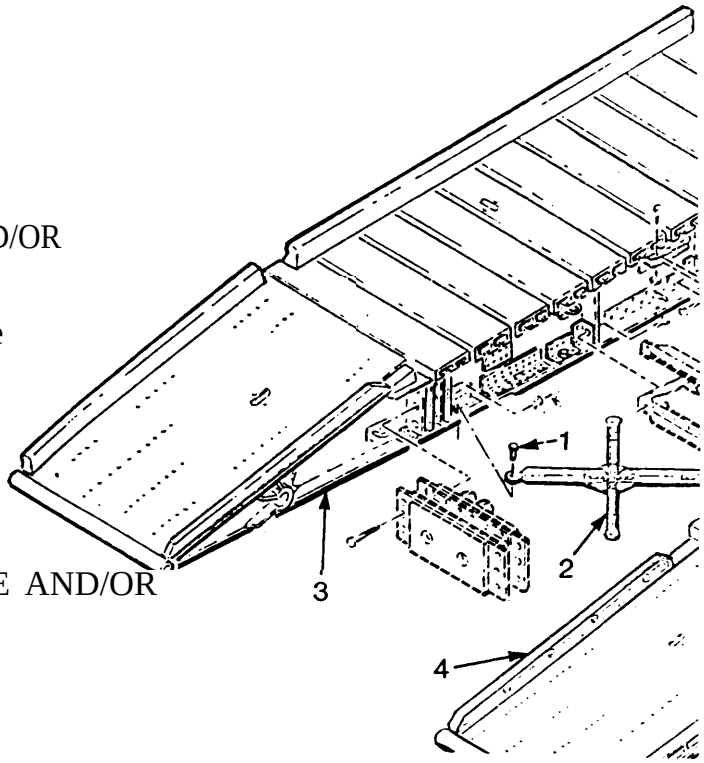

REMOVAL

REMOVE RAMP SECTION (NEAR-SHORE AND/OR FAR-SHORE) LATERAL BRACE (2).

a. Remove four bolts (1) securing lateral brace (2) to ramp sections (3) and (4).

b. Remove lateral brace (2).

INSTALLATION

INSTALL RAMP SECTION (NEAR-SHORE AND/OR FAR-SHORE) LATERAL BRACE (2).

a. Install lateral brace (2) in position on ramp sections (3) and (4).

b. Install four bolts (1) in brace (2). Tighten four bolts (l).

END OF TASK

NEAR-SHORE RAMP SECTION TRANSVERSE BRACE REPLACEMENT

TOOLS/EQUIPMENT:	General Mechanics Tool Box SC 5180-90-N26 Lifting Device (2000 lbs capacity) Sling, Multiple Leg
SUPPLIES:	None.
EQUIPMENT CONDITIONS:	Scissoring Cables and attaching hardware removed (pg 3-20). Hydraulic Cylinder removed (pg 3-23). Cylinder Beam removed (pg 3-31).
PERSONNEL:	Two

REMOVAL

REMOVE NEAR-SHORE RAMP SECTION TRANSVERSE BRACES (2 and 4).

WARNING

The hydraulic cylinder is heavy and can crush you. Stay clear of the cylinder when it is suspended. Only personnel necessary to the task should be in, on, or around the task area.

a. Remove four bolts (1) from transverse brace (2). Remove transverse brace (6).

b. Remove four bolts (3) securing transverse brace (4) to sections (5 and 6). Remove transverse brace (4).

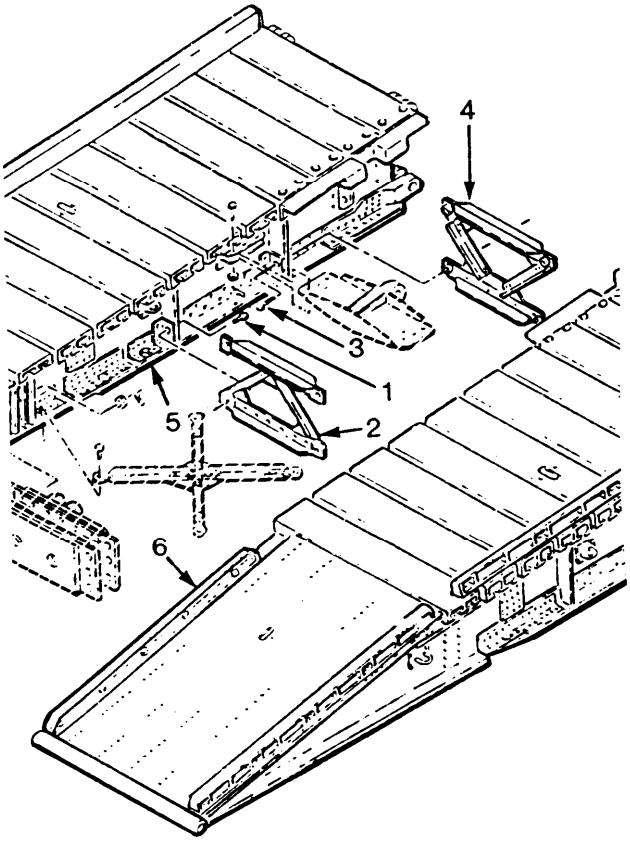

INSTALLATION

INSTALL NEAR-SHORE RAMP SECTION TRANSVERSE BRACES (2 and 4).

a. Install transverse brace (2) in position on sections (5 and 6).

b. Install four bolts (1) securing transverse brace (2). Tighten four bolts (l).

c. Install transverse brace (4) in position on sections (5 and 6).

d. Install four bolts (3) securing transverse brace (4). Tighten four bolts (3).

END OF TASK

FAR-SHORE RAMP SECTION TRANSVERSE BRACE REPLACEMENT

TOOLS/EQUIPMENT: **General Mechanics Tool Box SC5180-90-N26**

SUPPLIES: **None.**

EQUIPMENT CONDITIONS: **None.**

PERSONNEL: **Two**

REMOVAL

REMOVE FAR-SHORE RAMP SECTION TRANSVERSE BRACES (2 and 6).

NOTE

Transverse braces may be mounted on either side of clip angles located on ramp sections.

a. Remove four bolts (1) securing transverse brace (2) to ramp sections (3 and 4).

b. Remove transverse brace (2).

c. Remove four bolts (5) securing transverse brace (6) to ramp sections (3 and 4).

d. Remove transverse brace (6).

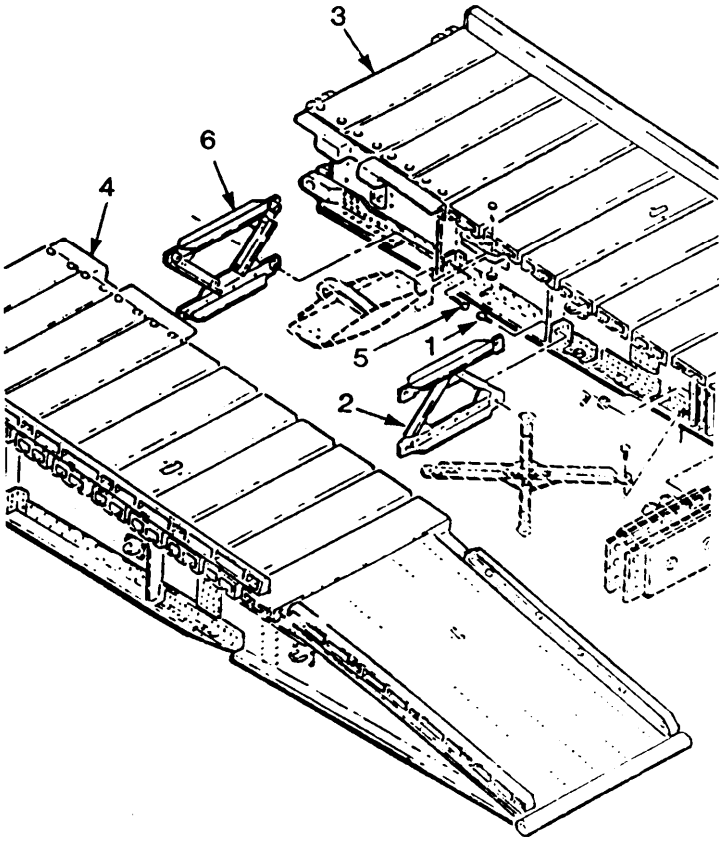

INSTALLATION

INSTALL FAR-SHORE RAMP SECTION TRANSVERSE BRACES (2 and 6).

a. Install transverse brace (2) in position on ramp sections (3 and 4).

b. Install four bolts (1) securing brace (2) in position. Tighten bolts (l).

c. Install transverse brace (6) in position on ramp sections (3 and 4).

d. Install four bolts (5) securing brace (6) in position. Tighten bolts (5).

END OF TASK

NEAR-SHORE CENTER SECTION TRANSVERSE BRACE REPLACEMENT
(Sheet 1 of 2)

TOOLS/EQUIPMENT	General Mechanics Tool Box SC 5180-90-N26 Lifting Device (2000 lbs capacity) Sling, Multiple Leg
SUPPLIES:	None.
EQUIPMENT CONDITIONS:	Scissoring Cables and attaching hardware removed (pg 3-20). Hydraulic Cylinder removed (pg 3-23).
PERSONNEL:	Two

REMOVAL

REMOVE NEAR-SHORE CENTER SECTION TRANSVERSE BRACES (2 and 4).

NOTE

Ramp sections are not shown for clarity.

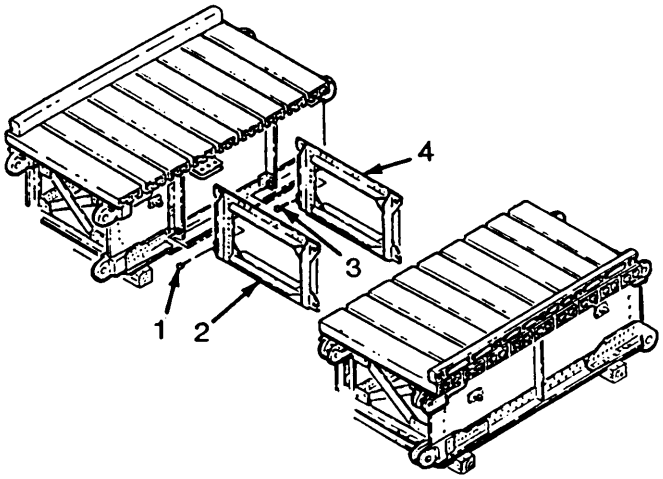

a. Remove four bolts (1) securing transverse brace (2) in position. Remove brace (2).

b. Remove four bolts (3) securing transverse brace (4) in position. Remove brace (4).

INSTALLATION

INSTALL NEAR-SHORE CENTER SECTION TRANSVERSE BRACES (2 and 4).

NOTE

Transverse braces can be mounted on either side of clip angles of center sections.

a. Position transverse brace (2) in position as shown on one side of clip angles.

NEAR-SHORE CENTER SECTION TRANSVERSE BRACE REPLACEMENT
(Sheet 2 of 2)

b. Be sure opposite side of brace (2) falls on the same side of the center section clip angles.

c. Install four bolts (1) securing transverse brace in position. Tighten bolts (l).

d. Position second transverse brace (4) in position as shown on one side of clip angles.

e. Be sure opposite side of brace (4) falls on the same side of the center section clip angles.

f. Install four bolts (3) securing transverse brace in position. Tighten bolts (3).

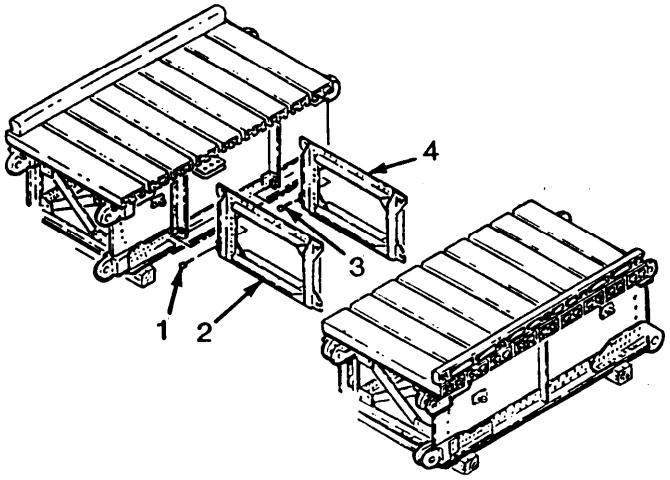

END OF TASK

FAR-SHORE CENTER SECTION TRANSVERSE BRACE REPLACEMENT (Sheet 1 of 4)

TOOLS/EQUIPMENT	**General Mechanics** Tool Box SC 5180-90-N26 Lifting Device (2000 lbs capacity) Sling, Multiple Leg
SUPPLIES:	None.
EQUIPMENT CONDITIONS:	Cable Beam removed (pg 3-14). Far-Shore Ramp Section removed (pg 3-48).
PERSONNEL:	Two

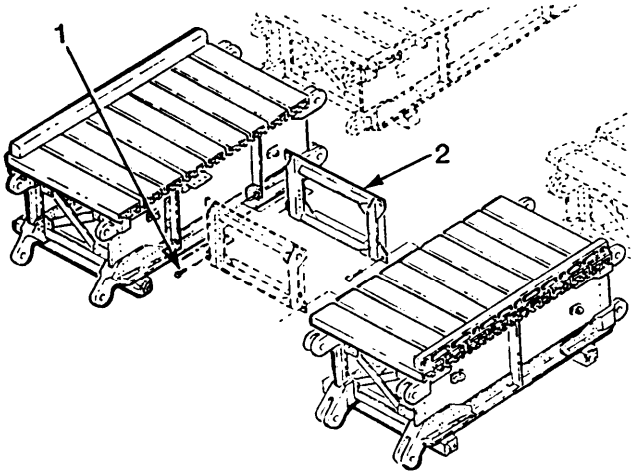

REMOVAL

REMOVE FAR-SHORE CENTER SECTION TRANSVERSE BRACES (2 and 25).

NOTE

Cable beam, cables, struts, etc., not shown for clarity.

a. Remove four bolts (1) securing transverse brace (2) in position.

b. Remove transverse brace (2).

c. Using a lifting device cable (3), place sling (4) around the center and thru holes in the middle of quadrant (5). Take a slight strain on the quadrant with lifting device.

d. Place a wood block (6) under the lower portion of the quadrant to preclude rolling. Leave the sling and lifting device attached.

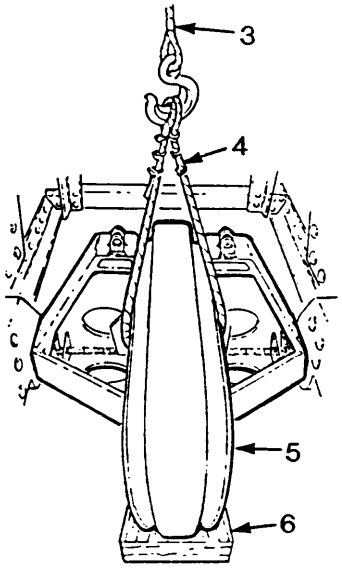

FAR-SHORE CENTER SECTION TRANSVERSE BRACE REPLACEMENT (Sheet 2 of 4)

e. Remove two retainers (7) from one side of two pins (8) holding cable retainer (9) in position on quadrant (5).

f. Remove two pins (8) from flanges (10) of quadrant (5) releasing cable retainer (9).

g. Remove cable retainer (9) holding cables (11) in grooves of quadrant (5).

WARNING

The scissoring cables are heavy and can crush you. Stay clear of the cables when they are suspended.

NOTE

The direction of the rotation of the cable strands are critical. The left cable is not designed for use on the right and vice versa. Note the rotation of the stands of the cable when replacing cables, check the current placement with illustrations given and ensure they are installed properly.

h. Attach a lifting sling to the approximate center of the cables (11) and lift until slack is removed.

i. Remove equalizer plate pin retainer (12)

plate (14) in position in cable beam (15).

NOTE

Have a second crew member steady the cables/equalizer plate for the following step.

j. Remove equalizer plate pin (13) from cable beam (15) releasing equalizer plate (14).

k. Remove retainer (16) securing nut (17) to bolt (18). Remove nut (17) from bolt (18) securing quadrant strut (19) to cable beam (15). Remove bolt (18).

l. Repeat for second strut (20).

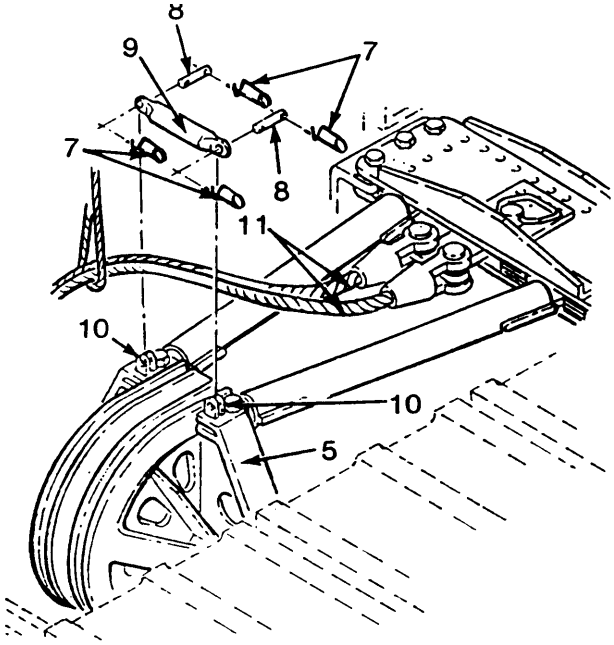

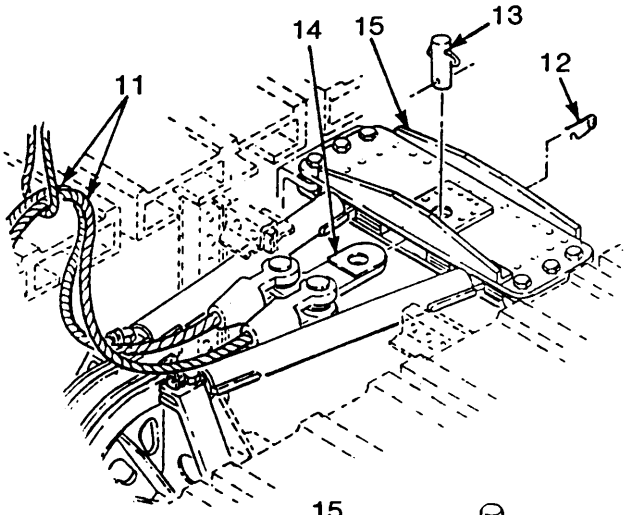

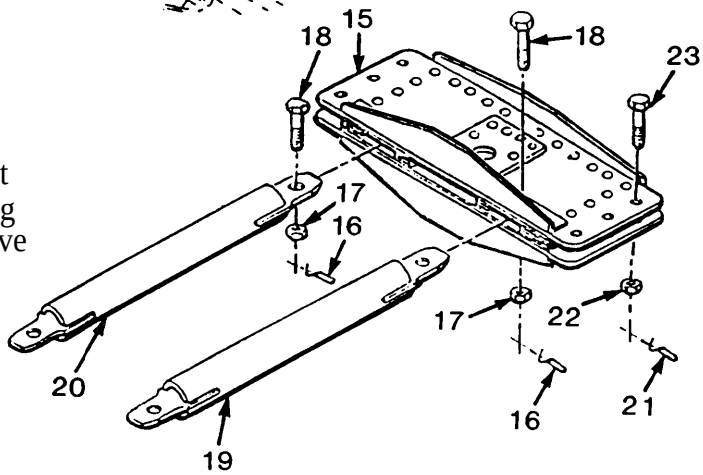

FAR-SHORE CENTER SECTION TRANSVERSE BRACE REPLACEMENT (Sheet 3 of 4)

m. Remove three retainers (21) securing three nuts (22) to three bolts (23) securing cable beam (15) to far-shore center section clip angles.

n. Repeat for opposite side of cable beam (15). Slide beam (15) clear of clip angles and quadrant struts (19 and 20). Set beam (15) aside.

o. Remove four bolts (24) securing transverse brace (25) to clip angles of center sections. Remove transverse brace (25).

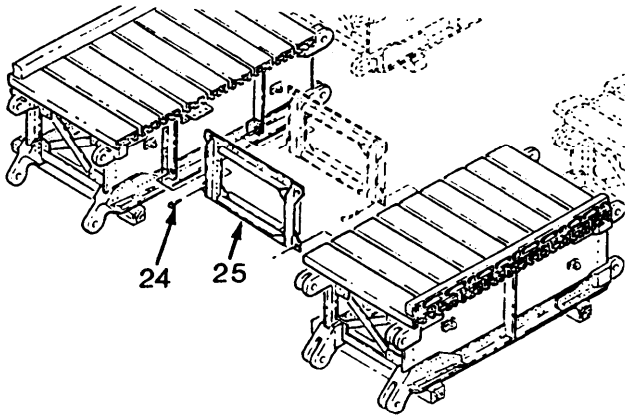

INSTALLATION

INSTALL FAR-SHORE CENTER SECTION TRANSVERSE BRACES (2 and 25).

NOTE

.Transverse braces can be mounted on either side of clip angles of center sections.

•Be sure opposite side of brace (25) falls on the same side of the center section Clip angles.

a. Position transverse brace (25) in position as shown on one side of clip angles.

b. Install four bolts (24) securing transverse brace in position. Tighten bolts (24).

c. Slide transverse brace (25) over cylinder cap end.

d. Slide cable beam (15) in position on clip angles on center sections. Be sure connecting ends of struts (19 and 20) fit in recessed slots of beam (15).

e. Aline the holes in beam (15) with those in the clip angles.

f. Install six bolts (23) in cable beam (15).

g. Thread six nuts (22) on six bolts (23). Tighten nuts (22).

h. Install six retainers (21) in six bolts (23).

i. Secure transverse brace (25).

NOTE

It maybe necessary to shake quadrant (not shown) up and down using lifting device in order to a.line strut mounting holes.

j. Install two bolts (18) through cable beam (15) securing struts (19 and 20) in position.

k. Thread two nuts (17) on two bolts (1 8). Tighten nuts (17).

1. Install two retainers (16) in two bolts (18).

FAR-SHORE CENTER SECTION TRANSVERSE BRACE REPLACEMENT (Sheet 4 of 4)

NOTE

A second crew member is required for the following task.

m. Insert flat end of equalizer plate (14) into cavity located on cable beam (15). Install equalizer plate pin (13) in cable beam (15) securing quaker plate and attached cables (11).

n. Install equalizer plate pin retainer (12) in pin (13).

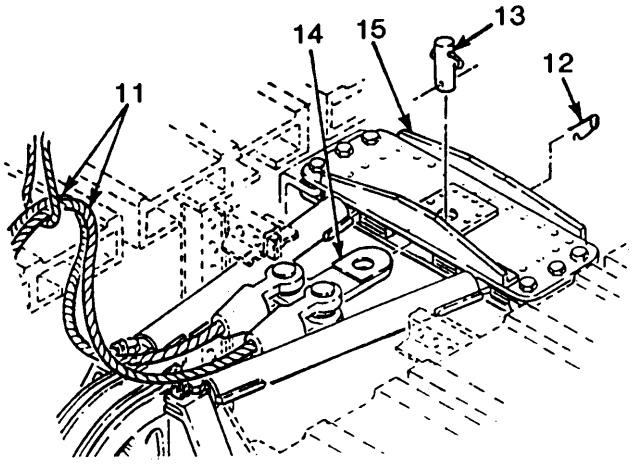

NOTE

The direction of the rotation of the cable strands are critical. The left cable is not designed for use on the right and vice versa Note the rotation of the strands of the cable when replacing cables, check the current placement with Detail A and B and ensure they are installed properly.

o. install cable retainer (9) in flanges (10) of quadrant (5) securing cables (11) in position.

p, Install two pins (8) through flanges (10) locking cable retainer (9) in position.

q. install two pin retainers (7) in pins (8). If second two pin retainers (7) were removed, install second two pin retainers (7) in opposite ends of pins (8).

r. Position transverse brace (2) on one side of clip angles.

s. install four bolts (1) securing brace (2). Tighten bolts.

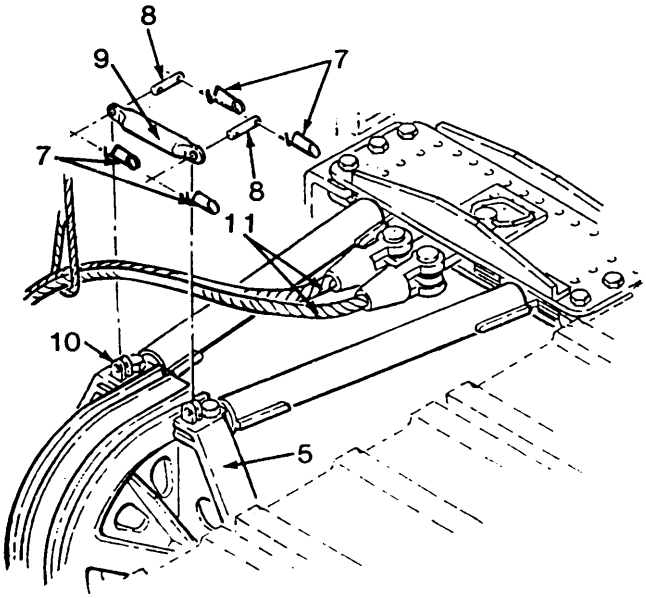

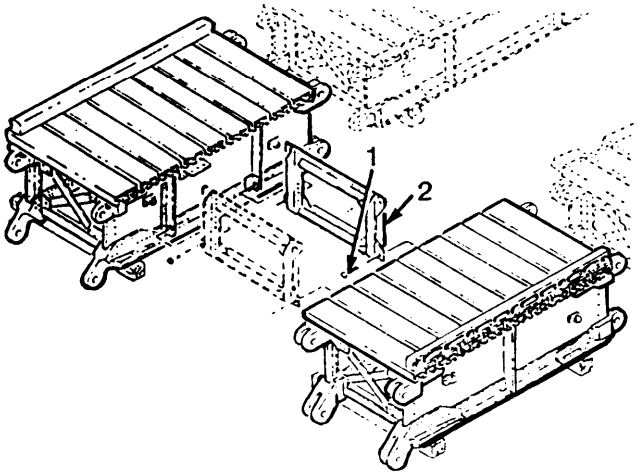

END OF TASK

QUADRANT REPLACEMENT (Sheet 1 of 3)

TOOLS/EQUIPMENT General Mechanics Tool Box SC 5180-90-N26
Lifting Device (2000 lbs capacity)
Sling, Multiple Leg

SUPPLIES: None.

EQUIPMENT CONDITIONS: Scissoring Cables and attaching hardware removed (pg 3-20).
Hydraulic Cylinder removed (pg 3-23).
Flexible Hydraulic Lines removed (pg 3-32).

PERSONNEL: Four

REMOVAL

REMOVE QUADRANT (4).

NOTE

Some quadrants may be equipped with a modification using a quadrant locking pinto hold a second locking pin in position. See Detail A. Illustration is shown with modification to quadrant Perform the procedures that apply.

a. Attach a lifting sling (1) through the top hole in the center of the quadrant (4). Attach sling (1) to lifting device cable (2).

b. Place a wood block (3) used as a scotch under the near-shore bottom end of the quadrant (4) as shown.

c. Remove slack from lifting sling (l).

d. Remove bridge pin retainer (5) (see Detail A) from quadrant locking pin (6). Remove quadrant locking pin (6) from angular plates (7).

e. Remove bridge pin retainer (8) (see Detail B), from quadrant locking pin (9). Refer to Detail A. Remove second quadrant locking pin (9) from opposite side of quadrant (4) and quadrant hinge pin (10).

f. Perform steps d. and e. for other side of quadrant (4).

g. Refer to Detail B. Remove bridge pin retainer (11) from quadrant locking pin (12). Remove quadrant locking pin (12) from quadrant hinge (13).

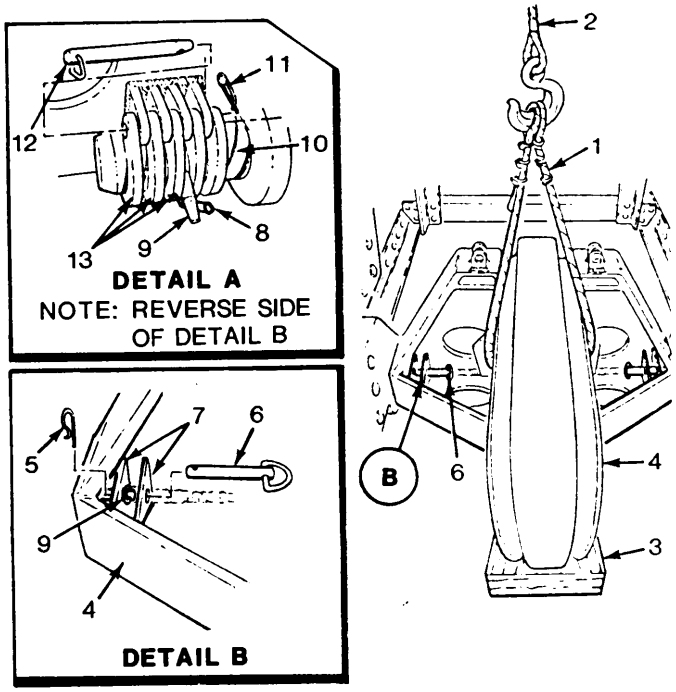

QUADRANT REPLACEMENT (Sheet 2 of 3)

h. Separate bars of hinge (13) for removal of quadrant (4).

i. Perform steps g. and h. for opposite side of quadrant (4).

j. Be sure all slack has been taken up by lifting crane to preclude rolling of quadrant.

k. Remove bridge bolt retainer (14) from bridge bolt (15). Remove bridge bolt nut (16) from bolt (15) holding strut (17) to quadrant (4). Remove bolt (15).

l. Repeat step k. for second strut (17).

m. Using lifting device and sling, slowly lift quadrant (4), rotate 90° and remove from bridge and set aside.

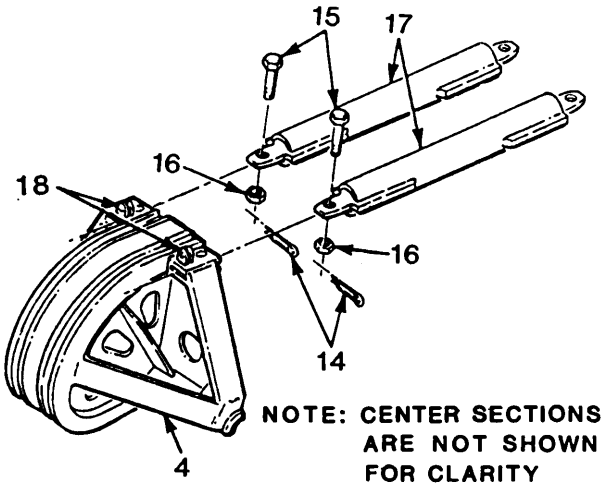

INSTALLATION

INSTALL QUADRANT (4).

a. Using a sling (1) and lifting device, lift quadrant (4) for placing on quadrant hinge pins (10). Be sure bars of quadrant hinges (13) are open as shown.

b. Slowly lower quadrant (4) into position. When quadrant hinges (13) are at the same level as pins (10), move quadrant forward and over pins (10).

c. Using wood blocks, chock up underside of quadrant (3) so it will not roll.

d. Lift up/over bars (13) and mesh with upper bars (13).

e. Refer to Detail A. Insert quadrant locking pin (12) through holes in meshed bars of hinge (13). Insert bridge pin retainer (11) in pin (12).

f. Refer to Detail B. Install quadrant locking pin (9) in base of quadrant (4) through base of quadrant, and through quadrant hinge pin (13) (not shown).

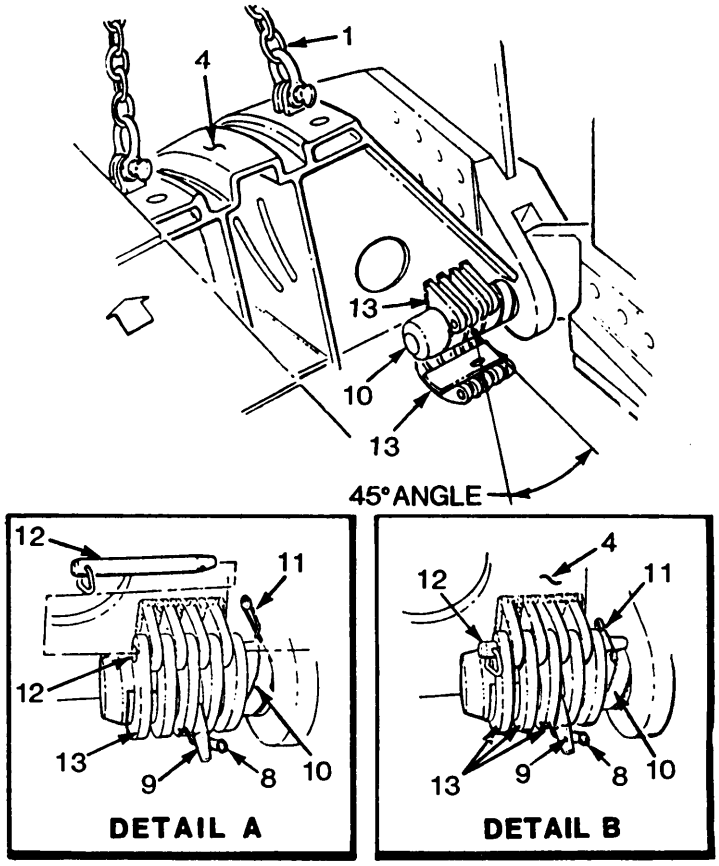

QUADRANT REPLACEMENT (Sheet 3 of 3)

g. Refer to Detail A. Insert bridge pin retainer (8) in locking pin (9).

h. Refer to Detail B. Install quadrant locking pin (6) in holes at base of quadrant (4) passing over installed pin (9). Pin (6) secures pin (9) in place. Install bridge pin retainer (5) in locking pin (6).

i. Leave sling in place to aid in connection of the quadrant struts.

j. Using sling and lifting device, lift upon quadrant (4) and remove blocking.

k. Slowly lower quadrant (4) to the surface.

l. Position quadrant struts (17) so they will fit into slots (18) located on quadrant (4).

m. Using sling and lifting device, lift up on quadrant (4) and at the same time, guide quadrant struts (17) into slots (18).

n. Install two bridge bolts (15) through top of quadrant (4), through holes in struts (17) and out bottom of slots (18).

o. Thread two nuts (16) on bolts (15). Tighten nuts (16). Install two bridge bolt retainers (14) in holes of bolts (15).

END OF TASK

NEAR-SHORE RAMP SECTION REPLACEMENT (Sheet 1 of 2)

TOOLS/EQUIPMENT: General Mechanics Tool Box SC 5180-90-N26
Lifting Device (8000 lbs capacity)
Sling, Multiple Leg

SUPPLIES: None.

EQUIPMENT CONDITIONS: Tie Rods removed (pg 3-13).
Scissoring Cables and attaching hardware removed (pg 3-20).
Hydraulic Cylinder removed (pg 3-23).
Cylinder Beam removed (pg 3-31).
Flexible Hydraulic Lines (diaphragm) removed (pg 3-32).
Lateral Brace removed (pg 3-34).
Near-Shore Transverse Brace removed (pg 3-35).

PERSONNEL: Five

REMOVAL

REMOVE NEAR-SHORE RAMP SECTION (7).

a. Remove three bolt retainers (1), three nuts (2), and three bolts (3) securing diaphragm (4) to the ramp section being replaced.

b. Remove four retaining pins (5) from four locking and connecting pins (6). Remove four locking and connecting pins (6) securing ramp section (7) to center section (8).

c. Using lifting device and sling, separate ramp section (7) from center section (8) a distance of about 1 ft.

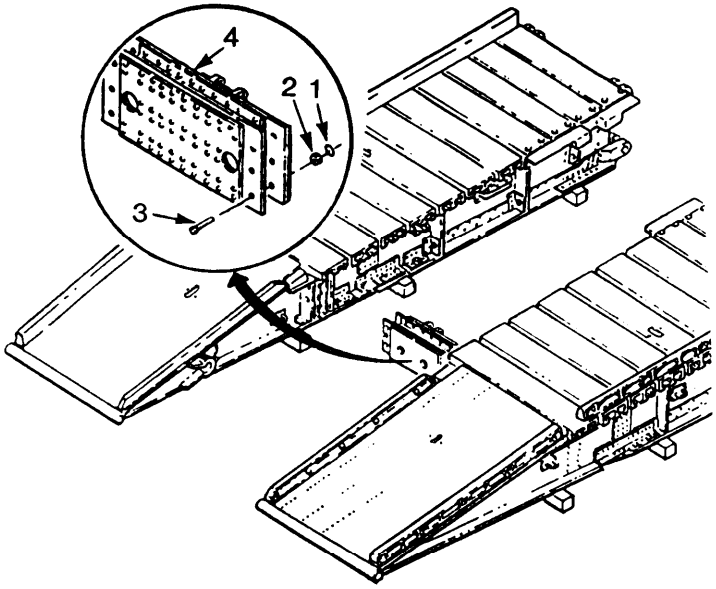

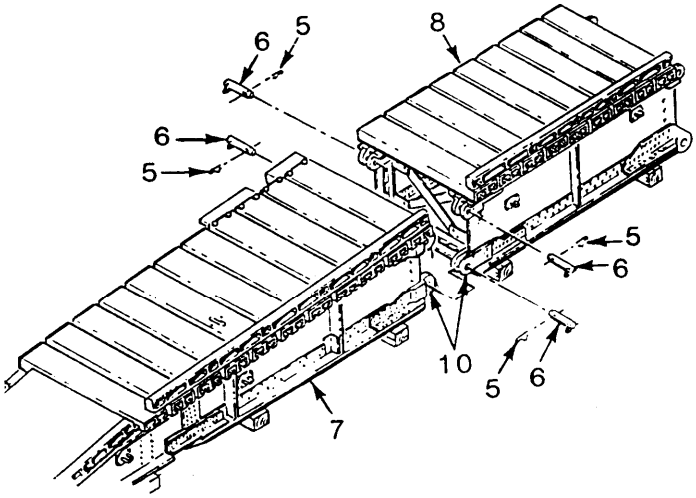

NEAR-SHORE RAMP SECTION REPLACEMENT (Sheet 2 of 2)

WARNING

FRH hydraulic fluid may contain Tricresyl Phosphate (TCP) which, if taken internally, can cause paralysis. Hydraulic fluid may be absorbed through the skin. If hydraulic fluid gets on skin, wash with soap and water as soon as possible.

d. Disconnect flexible hydraulic line (9) from separated ramp section (7). Position line (9) out of harm's way.

INSTALLATION

INSTALL NEAR-SHORE RAMP SECTION (7).

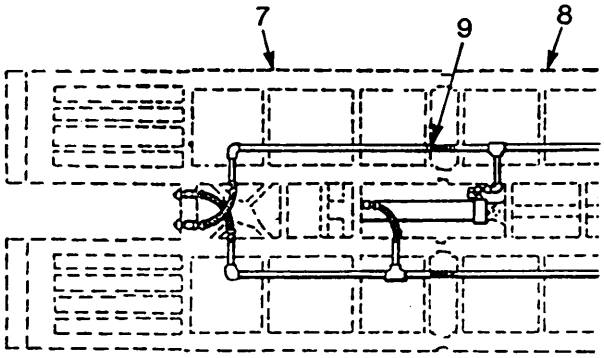

a. Using lifting device and sling, position replacement ramp section (7) in line with center section (8). Leave about 1 ft separation between ramp and center section.

b. Reconnect flexible hydraulic line (9) located on center section (8) to replacement ramp section (7). Ensure connection is tight.

N O T E

Ensure that disconnected braces and diaphragm fall on the correct side of clip angles, or in position for alinement for connecting.

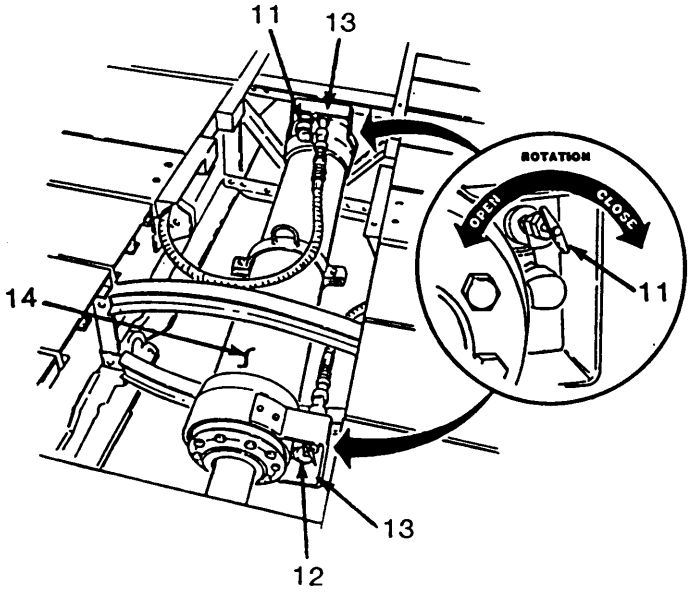

c. Using lifting device and sling, position ramp section (7) so the end connectors (10) of sections (7 and 8) will aline for pinning.

d. Insert four locking and connecting pins (6) through mated end connectors (10). Insert four retaining pins (5) through pins (6).

e. Install three bolts (3), three nuts (2), and three retainers (1) securing diaphragm (4) to replaced ramp section.

f. Ensure manual hydraulic bleed valves (11) and (12), located within the protective housings (13) on both ends of hydraulic cylinder (14) are closed.

END OF TASK

FAR-SHORE RAMP SECTION REPLACEMENT (Sheet 1 of 2)

TOOLS/EQUEMENT: General Mechanics Tool Box SC 5180-90-N26
Lifting Device (8000 lbs capacity)
Sling, Multiple Leg

SUPPLIES: None.

EQUIPMENT CONDITIONS: Tie Rods removed (pg 3-13).
Flexible Hydraulic lines removed (Diaphragm) (pg 3-32).
Lateral Brace removed (pg 3-34).
Far-Shore Ramp Section Transverse Brace removed (pg 3-36).
Diaphragm removed (pg 3-51).

PERSONNEL: Five

REMOVAL

REMOVE FAR-SHORE RAMP SECTION (7).

WARNING

FRH hydraulic fluid may contain Tricresyl Phosphate (TCP) which, if taken internally, can cause paralysis. Hydraulic fluid may be absorbed through the skin. If hydraulic fluid gets on skin, wash with soap and water as soon as possible.

a. Release hydraulic pressure by turning manual hydraulic bleed valves (1) and (2) located within the protective housings (3) on both ends of hydraulic cylinder (4).

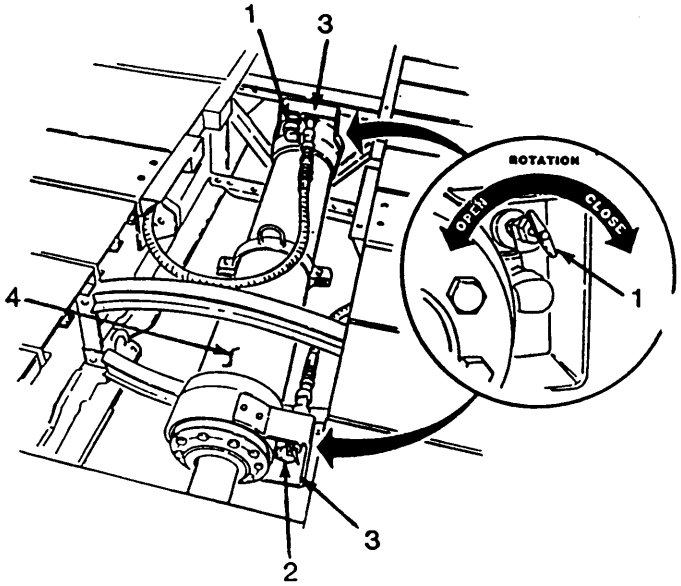

b. Remove four retaining pins (5) from four locking and connecting pins (6). Remove four locking and connecting pins (6) securing ramp section (7) to center section (8).

C. Using lifting device and sling, separate damaged ramp section (7) from adjoining center section (8) a distance of about 1 ft.

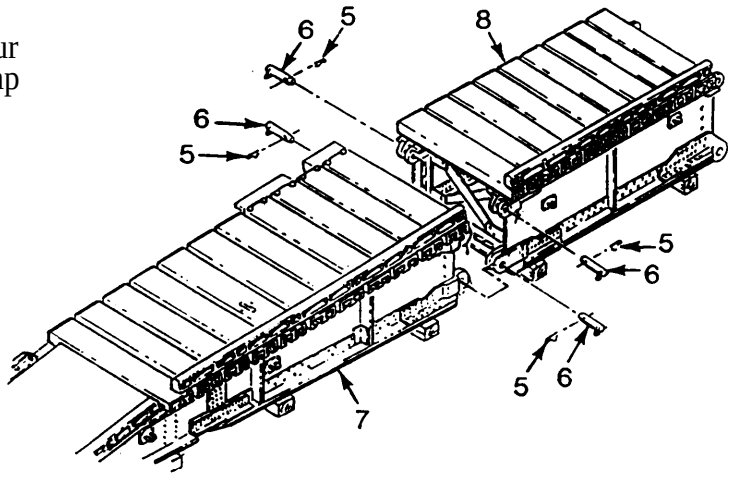

FAR-SHORE RAMP SECTION REPLACEMENT (Sheet 2 of 2)

d. Disconnect flexible hydraulic line (9) from separated ramp section (7). Position line (9) out of harm's way.

e. Using lifting device and sling, move separated ramp section aside.

INSTALLATION

INSTALL FAR-SHORE RAMP SECTION (7).

NOTE

- **Ensure that disconnected braces and diaphragm falls on the correct side of clip angles, or** in position for alinement for connecting.
- Ensure transverse, lateral braces, and diaphragm are located on or in the correct position for mounting before continuing. If not, disconnect ramp section from center section and reposition, then reconnect.

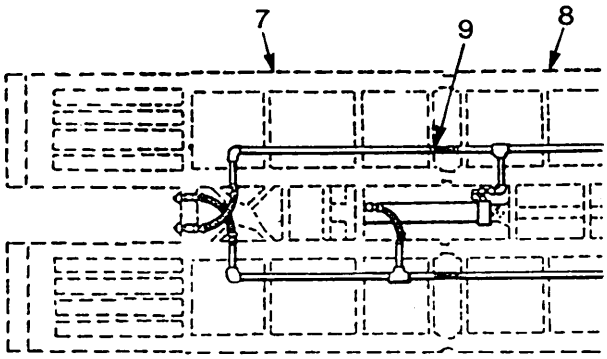

a. Using lifting device and sling, position replacement ramp section (7) in line with center section (8). Leave about 1 foot separation between ramp section and center section.

b. Connect disconnected flexible hydraulic line (9) located on center section (8) ramp section (7). Ensure connection is tight.

c. Using lifting device and sling, position ramp section (7) so the end connectors (10) of sections (7) and (8) will aline for pinning. Be sure components mounted to remaining ramp section aline with the attaching clip angles of ramp section (7).

d. Insert four pins (6) through mated end connectors (10). Insert four retainers (5) through installed pins (6).

e. Ensure manual hydraulic bleed valves (1) and (2) located within the protective housings (3) on both end of hydraulic cylinder (4) are closed.

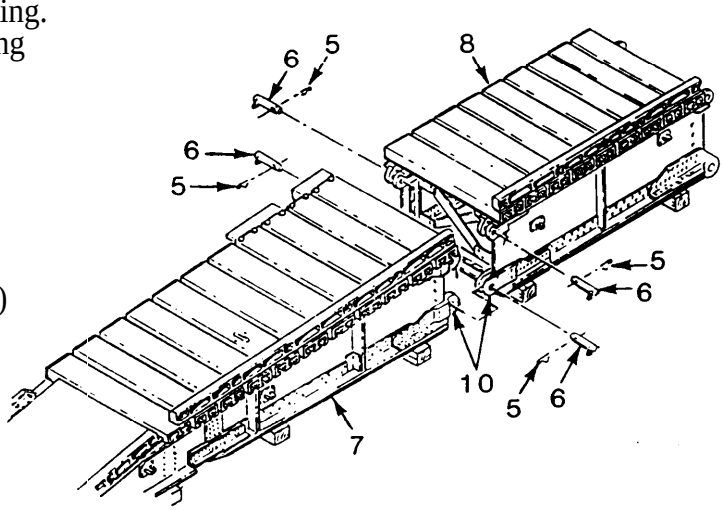

END OF TASK

NEAR-SHORE DIAPHRAGM REPLACEMENT

TOOLS/EQUIPMENT: General Mechanics Tool Box SC 5180-90-N26
Lifting Device (500 lbs capacity)
Sling, Multiple Leg

SUPPLIES: None.

EQUIPMENT CONDITIONS: Tie Rods removed (pg 3-13).
Hydraulic Cylinder removed (pg 3-23).
Flexible Hydraulic lines removed (diaphragm) (pg 3-32).
Lateral Brace removed (pg 3-34).
Near-Shore Ramp Section Transverse Brace removed (pg 3-35).
Near-Shore Ramp Section removed (pg 3-46).

PERSONNEL: Two

REMOVAL

REMOVE NEAR-SHORE DIAPHRAGM (4).

a. Remove three diaphragm bolt retainers (1) from three diaphragm bolts (2).

b. Remove three nuts (3) from bolts (2).

c. Remove three bolts (2) securing diaphragm (4) to ramp section (5).

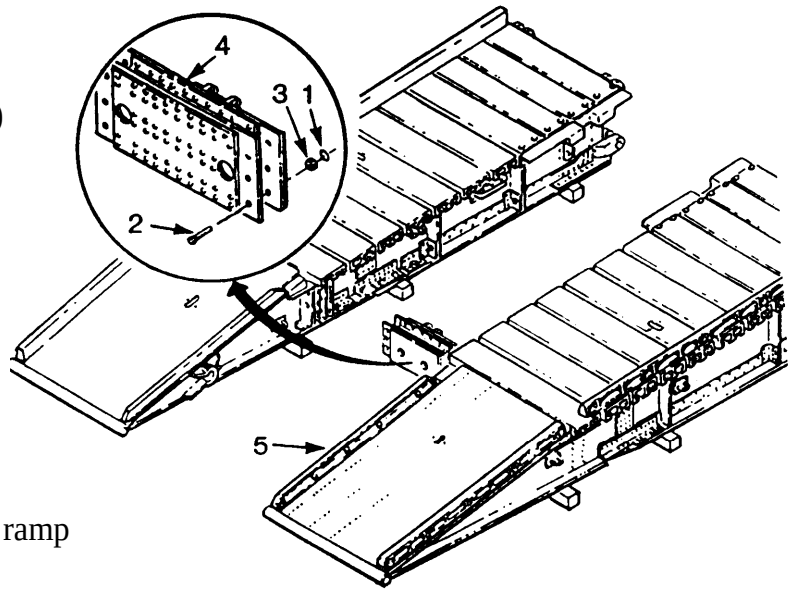

INSTALLATION

INSTALL NEAR-SHORE DIAPHRAGM (4).

a. Mate mounting holes of diaphragm (4) to ramp section (5). Install three bolts (2) through mounting holes of ramp section (5) and diaphragm (4).

b. Thread three nuts (3) on bolts (2). Install three diaphragm bolt retainers (1) in bolts (2).

END OF TASK

FAR-SHORE DIAPHRAGM REPLACEMENT

TOOLS/EQUIPMENT: General Mechanics Tool Box SC 5180-90-N26
Lifting Device (500 lbs capacity)
Sling, Multiple Leg

SUPPLIES: None.

EQUIPMENT CONDITIONS: Tie Rods removed (pg 3-13).
Hydraulic Cylinder removed (pg 3-23).
Flexible Hydraulic lines removed (Diaphragm) (pg 3-32).
Lateral Brace removed (pg 3-34).
Far-Shore Ramp Section Transverse Brace removed (pg 3-36).
Far-Shore Ramp Section removed (pg 3-48).

PERSONNEL: Two

REMOVAL

REMOVE FAR-SHORE DIAPHRAGM (4).

a. Remove three diaphragm bolt retainers (1) from three diaphragm bolts (2).

b. Remove three nuts (3) from bolts (2).

c. Remove three bolts (2) securing diaphragm (4) to remaining ramp section (5).

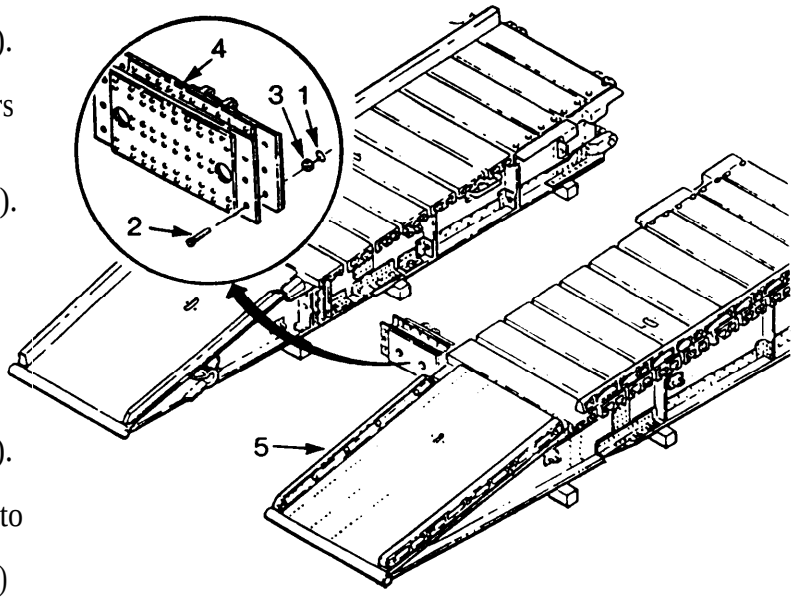

INSTALLATION

INSTALL FAR-SHORE DIAPHRAGM (4).

a. Mate mounting holes of diaphragm (4) to ramp section (5). Install three bolts (2) through mounting holes of ramp section (5) and diaphragm (4).

b. Thread three nuts (3) on bolts (2). Install three diaphragm bolt retainers (1) in bolts (2).

END OF TASK

RAMP SECTION DECK EXTRUSION REPLACEMENT (Sheet 1 of 4)

TOOLS/EQUIPMENT: General Mechanics Tool Box SC5180-90-N26

SUPPLIES: Lock Washer (item 4, Appendix E) (five required).
Lock Washer (item 2, Appendix E).

EQUIPMENT CONDITIONS: Hydraulic Cylinder removed (pg 3-23).
Near-Shore Ramp Section removed (pg 3-46).

PERSONNEL: Two

REMOVAL.

NOTE

- Some deck extrusions may be secured by curb hardware. It may be necessary to loosen some curb hardware in order to relieve pressure on the deck extrusions for removal.
- Three are 13 different deck extrusions located on the bridge. Careful inspection of the deck extrusion removed and matching that extrusion with the match in TM 5-5420-203-24P is necessary to ensure the correct replacement is requested. Near fits, rounding of mounting holes, redrilling and/or alteration of deck extrusion and mounting girders or supports is not authorized.
- Alphabetical letters on deck extrusions are indicated to identify like and unlike extrusions.

REMOVE RAMP SECTION DECK EXTRUSIONS (5 AND 12).

a. Remove nut (1), lock washer (2), and flat washer (3) from screw (4) securing deck extrusion (5) to ramp section. Discard lock washer.

b. Remove flat washer (6) and screw (4) from deck extrusion (5).

c. Repeat steps a. and b. for remaining mounting hardware items (l), (2), (3), (4), and (6).

NOTE

Mechanic will have to access remaining deck extrusion mounting hardware from underneath the section.

d. Remove nut (7), lock washer (8), and flat washer (9), from screw (10) securing flat washer (11) in position between deck extrusions (5 and 12). Discard lock washer.

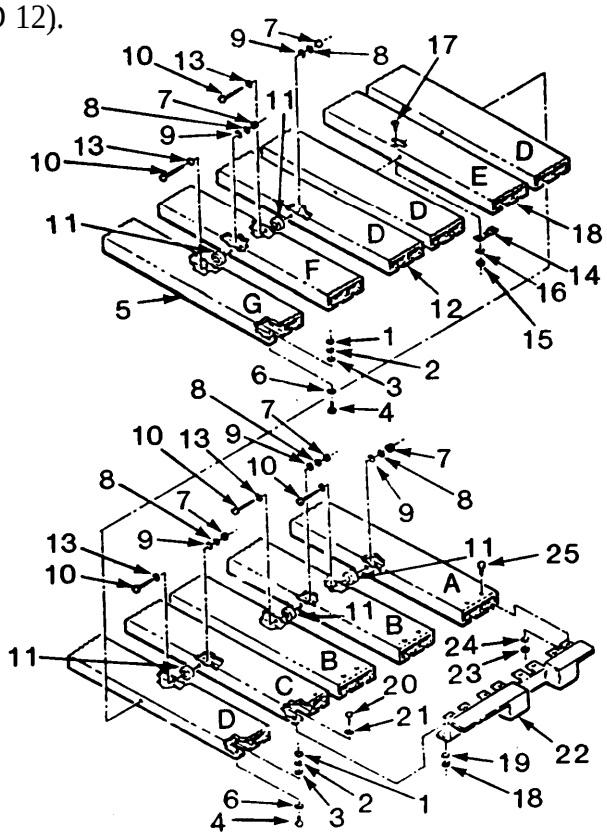

RAMP SECTION DECK EXTRUSION REPLACEMENT (Sheet 2 of 4)

NOTE

Flat washer (item 11) serves as a spacer between the varying width deck extrusions. Refer to TM 5-5420-203-24P, Repair Parts and Special Tools List (RPSTL) for identification of the replacement flat washer (spacer) needed. Alteration of the flat washer (shaving, sanding, and cutting) to fit is not authorized.

e. Slide screw (10) back until it releases flat washer (spacer)(1 1).

f. Remove flat washer (13) and screw (10) from deck extrusions (5 and 12).

NOTE

Steps g. and h. are for removal of the lifting bar (14).

g. Remove two nuts (15) and two lock washers (16) securing lifting bar (14) in position. Discard lock washers.

h. Remove lifting bar (14) and two screws (17).

NOTE

Removal of male electrical retainers requires the removal of attached deck extrusions. The number of mounting screws varies.

i. Refer to the alphabetical lettering on the illustration and remove four deck extrusions marked A, B, and C in accordance with steps a. thru h. above.

j. Remove four deck extrusions with male electrical retainer (18) attached as a unit.

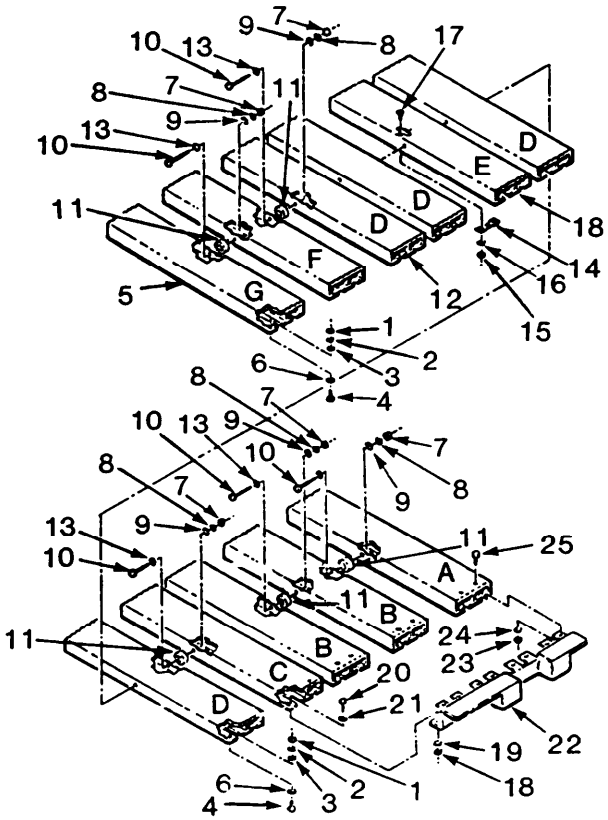

RAMP SECTION DECK EXTRUSION REPLACEMENT (Sheet 3 of 4)

k. Remove nut (19) and lock washer (20) from screw (21). Remove screw (21) with flat washer (22) securing male electrical retainer (18) to deck extrusions. Discard lock washer. Repeat for remaining hardware.

1. Remove nut (23) and lock washer (24) from screw (25) securing male electrical retainer (22) to deck extrusions. Discard lock washer.

m. Remove male electrical retainer (22).

INSTALLATION

INSTALL RAMP SECTION DECK EXTRUSIONS (5 AND 12).

a. Inspect replacement deck extrusion to be sure it is the correct replacement and all mounting holes aline. Position deck extrusion under curb, if mounted.

b. Place flat washer (13) on screw (10). Position flat washer (spacer) (11) between deck extrusions (5 and 12) and aline with mounting holes.

c. Install screw (10) and flat washer (13) thru deck extrusion (5), flat washer (spacer) (11) and deck extrusion (12).

d. Install flat washer (9) and new lock washer (8) on screw (10).

e. Thread nut (7) on screw (10). Tighten nut (7).

f. Place flat washer (6) on screw (4). Install screw (4) from bottom side up through support girder and deck extrusion (5 or 12).

g. Install flat washer (3) and new lock washer (2) on screw (4). Thread nut (1) on screw (4). Tighten nut (1).

h. Repeat steps a. thru g. as necessary for remaining extrusions.

i. Position lifting bar (14) on underside of deck extrusion as shown.

j. Install two screws (17) from the topside down through mounting holes in deck extrusion and lifting bar (14).

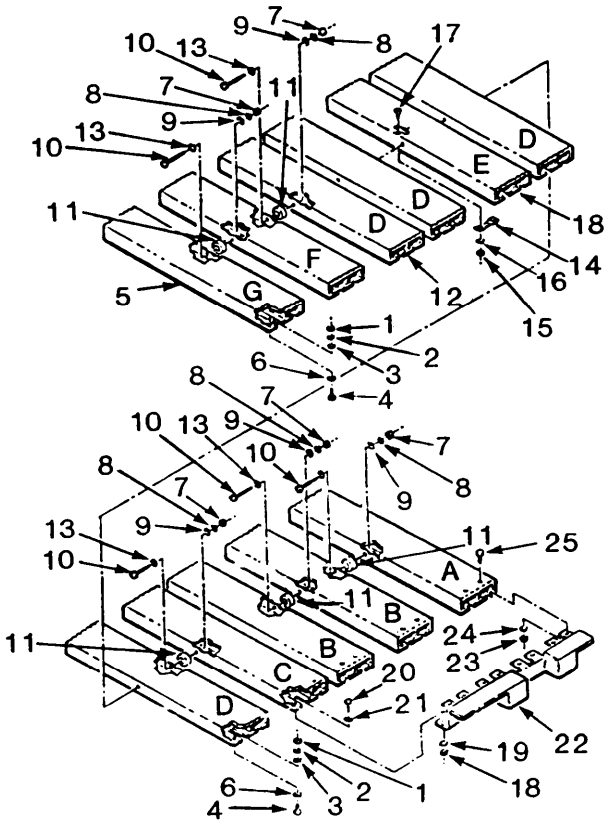

RAMP SECTION DECK EXTRUSION REPLACEMENT (Sheet 4 of 4)

k. Install two new lock washers (16) and two nuts (15) on two screws (17). Tighten nuts (15).

l. Repeat steps i. thru k as necessary for remaining hardware.

m. Position male electrical retainer (22) in four deck extrusions A, B, and C as shown.

n. Install screw (25) through deck extrusion and electrical retainer (22)

o. Install new lock washer (24) on screw (25). Thread nut (23) on screw (25) and tighten.

p. Repeat steps m. thru o. for remaining screws (25).

q. Install flat washer (20) on screw (21). Install screw (21) in deck extrusion and electrical retainer (22).

r. Place new lock washer (19) on screw (21). Thread nut (18) on screw (21). Tighten nut (18).

s. Repeat steps q. and r. as necessary for remaining hardware.

t. Ensure all hardware is tight after replacement and check adjoining curb hardware for tightness.

END OF TASK

RAMP SECTION HARD HYDRAULIC LINE REPLACEMENT (Sheet 1 of 2)

TOOLS/EQUIPMENT: General Mechanics Tool Box SC 5180-90-N26

SUPPLIES: Locite, Pneumatic/Hydraulic Seal "569" (item 3, Appendix D)

EQUIPMENT CONDITIONS:
Tie Rods removed (pg 3-13).
Scissoring Cables and attaching hardware removed (pg 3-20).
Hydraulic Cylinder removed (pg 3-23).
Cylinder Beam removed (pg 3-31).
Flexible Hydraulic Lines (diaphragm) removed (pg 3-32).
Lateral Brace removed (pg 3-34).
Near-Shore Ramp Section Transverse Brace removed (pg 3-35).
Diaphragm removed (pg 3-51).
Ramp Section Deck Extrusions removed (pg 3-52).

PERSONNEL: Two

REMOVAL

REMOVE RAMP SECTION HARD HYDRAULIC LINE.

WARNING

FRH hydraulic fluid may contain Tricresyl Phosphate (TCP) which, if taken internally, can cause paralysis. Hydraulic fluid may be absorbed through the skin. If hydraulic fluid gets on skin, wash with soap and water as soon as possible.

a. Remove half quick-disconnect coupling (1) from pipe nipple (2).

b. Remove pipe nipple (2) from elbow (3).

NOTE

Items (4) thru (9) are found on the male ramp section only. If disassembling male ramp section, continue with step c. If disassembling female ramp section, go to step k.

c. Remove elbow (3) from pipe nipple (4).

d. Remove pipe nipple (4) from tee (5).

e. Remove half quick-disconnect coupling (6) from elbow (7).

f. Remove elbow (7) from nipple (8).

g. Remove nipple (8) from tee (5).

h. Remove tee (5) from nipple (9).

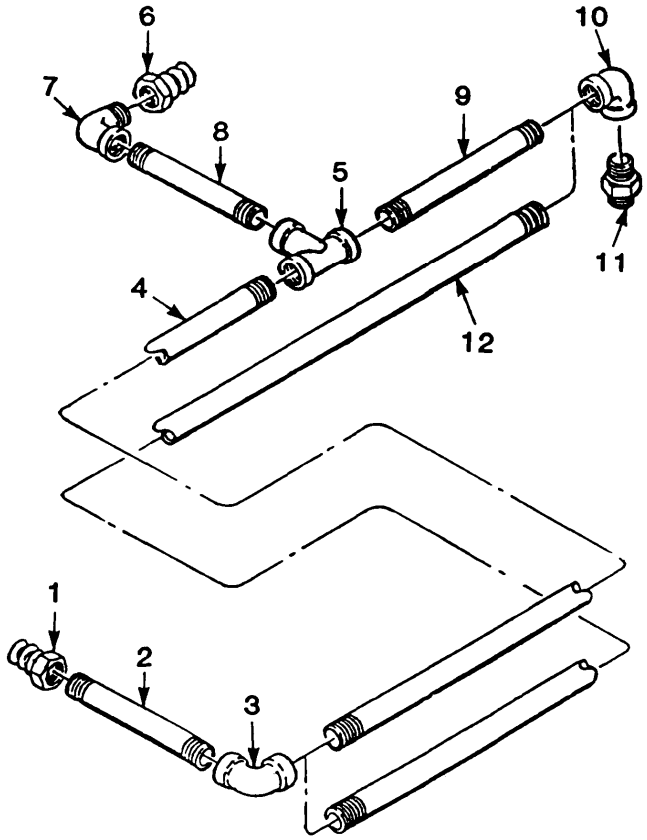

RAMP SECTION HARD HYDRAULIC LINE REPLACEMENT (Sheet 2 of 2)

NOTE

Items (9) (10), (11), and (12) have been replaced by the continuous hard-line piping on MLC 70.

i. Remove nipple (9) from elbow (10).

j. Remove hydraulic fitting (11) from elbow (10)

k. Remove elbow (3) from nipple (12)

l. Remove elbow (10) from nipple (12).
Remove fitting (11) from elbow (10).

INSTALLATION

INSTALL RAMP SECTION HARD HYDRAULIC LINE.

NOTE

It is critical that special care be taken not to flatten, score, or otherwise damage the threads of useable components during the replacement procedures Apply Loctite Pneumatic/ Hydraulic Seal "569" (or equivalent) to the threads of all pipe and fittings prior to installation.

Steps a. thru h. apply to the male ramp section only. If repairing a female ramp section, go to step i.

a. Thread half quick-disconnect coupling (1) in pipe nipple (2). Thread nipple (4) in tee (5)

b. Thread elbow (3) in nipple (4)

c. Thread nipple (2) in elbow (3)

d. Thread nipple (8) in tee (5)

e. Thread elbow (7) on nipple (8)

f. Thread half quick-disconnect coupling (6) in elbow (7).

g. Thread nipple (9) in tee (5).

h. Thread elbow (10) on nipple (9)

i. Thread half quick-disconnect coupling (1) in nipple (2). Thread nipple (12) in elbow (10).

j. Thread elbow (3) on nipple (12)

k. Thread nipple (2) in elbow (3).
Thread fitting (11) in elbow (10).

END OF TASK

RAMP SECTION MISCELLANEOUS COMPONENTS REPLACEMENT (Sheet 1 of 2)

TOOLS/EQUIPMENT: General Mechanics Tool Box SC 5180-90-N26

SUPPLIES: Lock Washer (item 2, Appendix E) (three required).
Lock Washer (item 3, Appendix E) (two required).
Lock Washer (item 4, Appendix E) (two required).

EQUIPMENT CONDITIONS: Tie Rods removed (pg 3-13).
Scissoring Cables and attaching hardware removed (pg 3-20).
Hydraulic Cylinder removed (pg 3-23).
Cylinder Beam removed (pg 3-3 1).
Flexible Hydraulic Lines (diaphragm) removed (pg 3-32).
Lateral Brace removed (pg 3-34).
Transverse Brace removed (pg 3-35).
Diaphragm removed (pg 3-5 1).
Ramp Section deck extrusion removed (pg 3-52).

PERSONNEL: Five

REMOVAL

REMOVE RAMP SECTION MISCELLANEOUS COMPONENTS.

a. Remove two nuts (1) and two lock washers (2) from two screws (3) holding pipe anchor clamp (4) to angle bracket (5) (not shown). Remove two flat washers (6) from screws (3). Discard lock washers.

b. Remove nut (7) and lock washer (8) from screw (9). Remove spring tension clip (10). Remove flat washer (11) and screw (9) from ramp section (12). Discard lock washer.

c. Remove two nuts (13), two lock washers (14), and two flat washers (15) from two machine screws (16). Remove two machine screws (16). Remove pipe flange (17). Discard lock washers.

d. Remove two nuts (18) and two lock washers (19) from two screws (20). Remove two screws (20). Remove lifting bar (2 1). Discard lock washers.

e. Remove threaded screw insert (22) from ramp section (12).

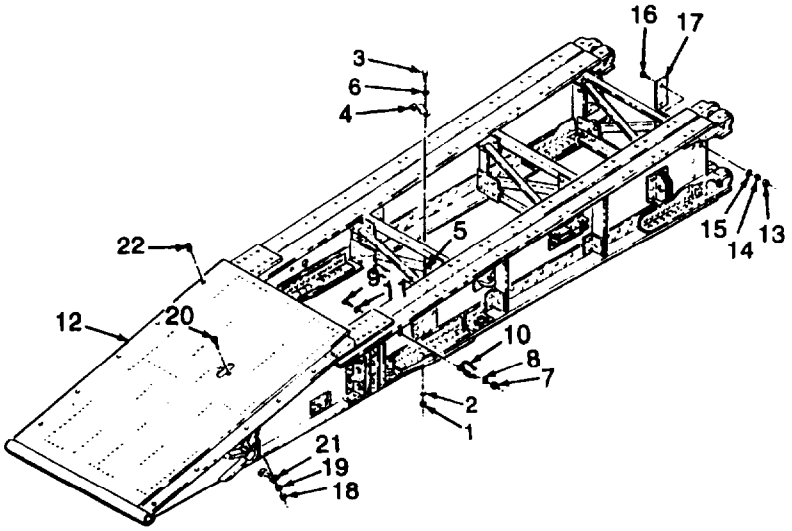

RAMP SECTION MISCELLANEOUS COMPONENTS REPLACEMENT (Sheet 2 of 2)

INSTALLATION

INSTALL RAMP SECTION MISCELLANEOUS COMPONENTS.

a. Place two screws (3) with two flat washers (6) thru pipe anchor clamp (4). Position clamp on section (12) at angle bracket (5). Install two new lock washers (2) and two nuts (1) on two screws (3). Tighten two nuts (l).

b. Place flat washer (11) on screw (9). Install screw (9) through spring tension clip (10). Install screw, flat washer, and spring tension clip in mounting hole located on ramp section (12). Place new lock washer (8) and nut (7) on screw (9). Tighten nut (7).

c. Place two machine screws (16) in pipe flange (17) and install on ramp section (12). Place two flat washers (15), new two lock washers (14) and two nuts (13) on two machine screws (16). Tighten nuts (13).

d. Install two screws (20) through ramp section (12). Place lifting bar (21) on two screws from underside of ramp section (12).

e. Place two new lock washers (19) and two nuts 18) on two screws (20). Tighten nuts.

f. Thread threaded screw insert (22) into ramp section (12).

END OF TASK

NEAR-SHORE CENTER SECTION REPLACEMENT (Sheet 1 of 4)

TOOLS/EQUIPMENT: General Mechanics Tool Box SC 5180-90-N26
Lifting Device (8000 lbs capacity)
Sling, Multiple Leg

SUPPLIES: None.

EQUIPMENT CONDITIONS: Scissoring Cables and attaching hardware removed (pg 3-20).
Hydraulic Cylinder removed (pg 3-23).
Center Section Transverse Braces removed (pg 3-37).
Quadrant must be removed (pg 3-43).
Near-Shore Ramp Section Removed (pg 3-46).

PERSONNEL: Five

REMOVAL

REMOVE NEAR-SHORE CENTER SECTION (4 AND 7).

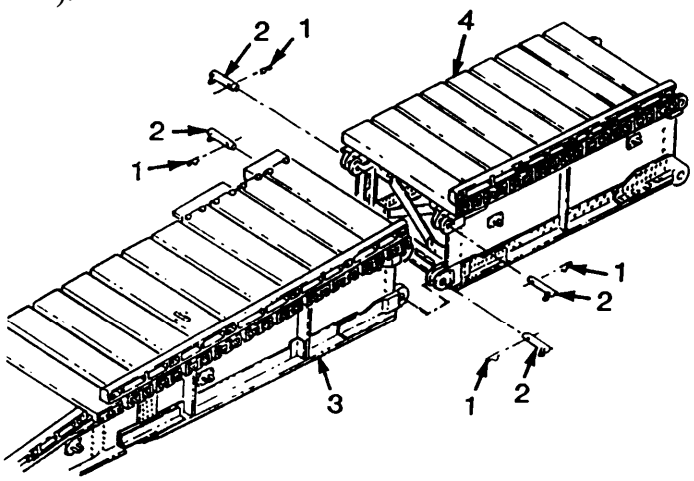

a. Remove four retaining pins (1) from four locking and connecting pins (2). Remove four locking and connecting pins (2) securing ramp section (3) to center section (4).

b. Using lifting device, separate ramp section (3) from adjoining center section (4) a distance of about 1 ft.

c. Perform steps a. and b. for opposite ramp.

WARNING

FRH hydraulic fluid may contain Tricresyl Phosphate (TCP) which, if taken internally, can cause paralysis. Hydraulic fluid may be absorbed through the skin. If hydraulic fluid gets on skin, wash with soap and water as soon as possible.

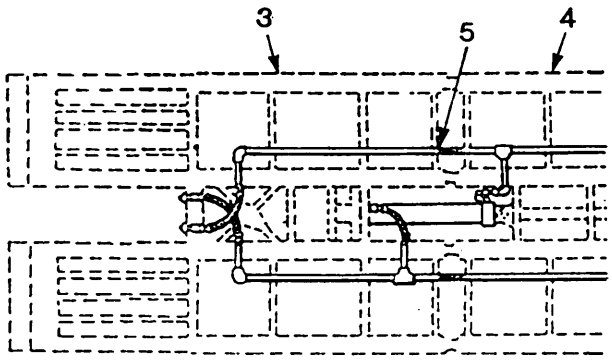

d. Disconnect flexible hydraulic line (5) from separated ramp section (3). Position line (5) out of harm's way.

e. Perform step d. for opposite ramp.

NEAR-SHORE CENTER SECTION REPLACEMENT (Sheet 2 of 4)

f. Using lifting device and sling, move separated ramp section (3) aside,

g. Drive quadrant hinge pin (6) from center hinges of center sections (4 and 7) from the center outward.

h. Remove pin retainer (8) from connector pin (9). Remove pin (9) from top connecting point (10) of center sections (4 and 7).

i. Remove pin retainer (11) from center section pin (12). Remove pin (12) from center sections (4 and 7). Remove pin retainer (13) from connector pin (14). Remove pin (14) from connecting point (15) of center sections (4 and 7).

j. Using lifting device and sling, separate center section about 1 ft from adjoining center section.

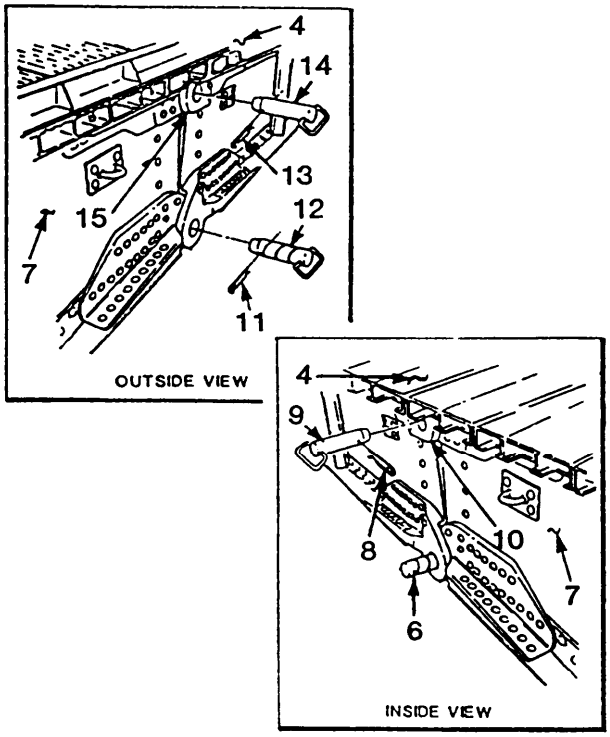

WARNING

FRH hydraulic fluid may contain Tricresyl Phosphate (TCP) which, if taken internally, can cause paralysis. Hydraulic fluid may be absorbed through the skin. If hydraulic fluid gets on skin, wash with soap and water as soon as possible.

k. Disconnect flexible hydraulic line (16) at connection point located on center section (4). Route line (16) out hose guide (17) and remove from bracing of center section (4).

l. Position line (16) out of harm's way on center section (4).

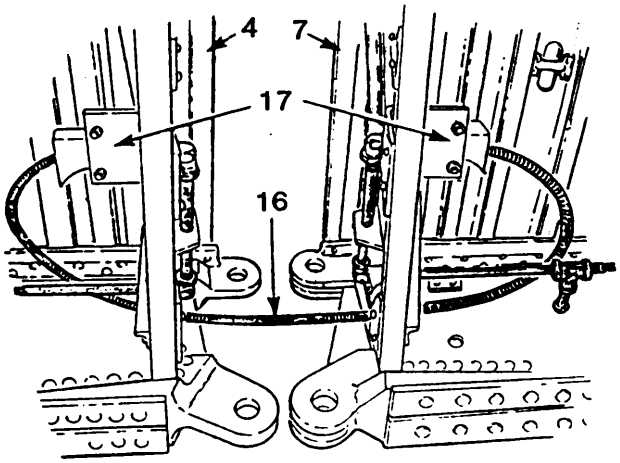

NEAR-SHORE CENTER SECTION REPLACEMENT (Sheet 3 of 4)

m. Using lifting device and sling, position damaged center section (4) aside.

INSTALLATION

INSTALL NEAR-SHORE CENTER SECTION (4 AND 7).

a. Using lifting device and sling, place the replacement center section (4) about 1 ft from and in line with center section (7) to be joined.

b. Route flexible hydraulic line (16) located on center section (7) through hose guide (17) located on replacement center section (4).

c. Connect end of flexible hydraulic line (16) to center section (4). Ensure connection is secure.

d. Using lifting device and sling, position replacement section (4) so connecting points (15 and 18) mate with other center section (7). Ensure flexible hydraulic line previously connected is not pinched.

NOTE

Some side to side and up and down adjustment may be required to install connecting pins.

e. Install quadrant hinge pin (6) through lower center hinge point (19) of center sections (4 and 7).

f. Install center section pin (12) through lower center section hinge point (18). Install pin retainer (11) through pin (12).

g. Install connector pin (14) through upper center section hinge connecting point (15). Install pin retainer (13) in pin (14).

h. Install connector pin (9) through center section connecting point (10). Install pin retainer (8) in pin (9).

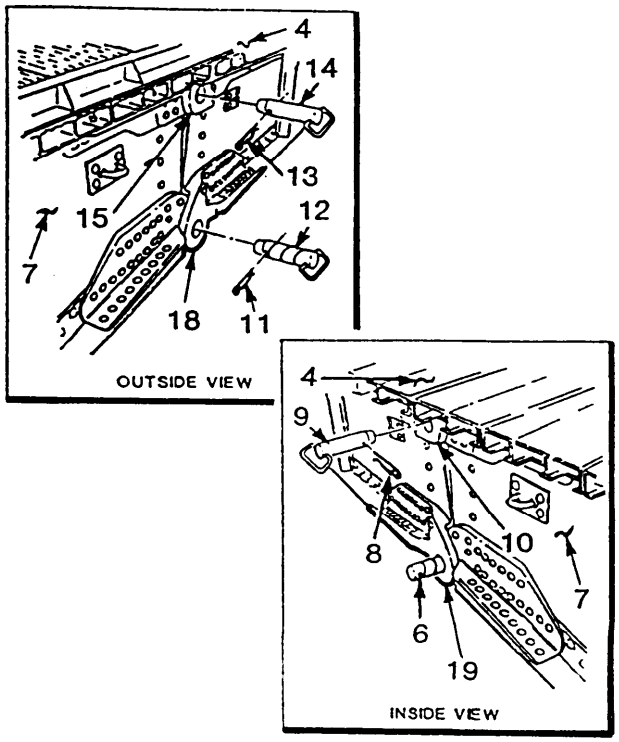

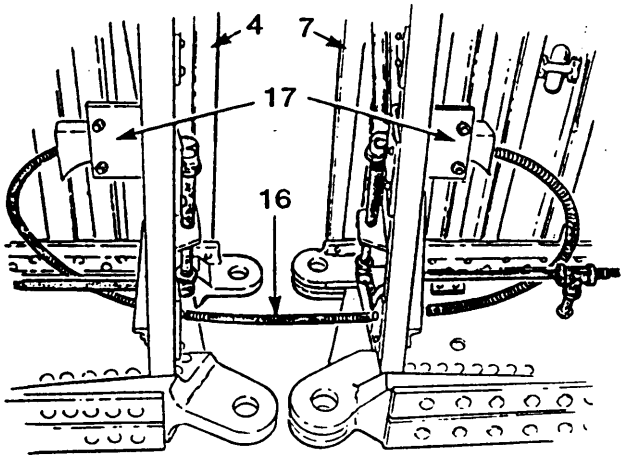

NEAR-SHORE CENTER SECTION REPLACEMENT (Sheet 4 of 4)

i. Position ramp section (3) so end connectors (20) mate with end connectors (21) of center section (4).

j. Install lower connecting pins (2) in ramp and center section end connectors. Install pin retainers (1) in connecting pins (2).

k. Install second lower connecting pins (2) in opposite side. Install second pin retainers (1) in second connecting pins (2).

l. Install upper connecting pins (2) in opposite side. Install second pin retainers (1) in second connecting pins (2).

m. Install second upper connecting pins (2) in opposite side. Install second pin retainers (1) in second connecting pins (2).

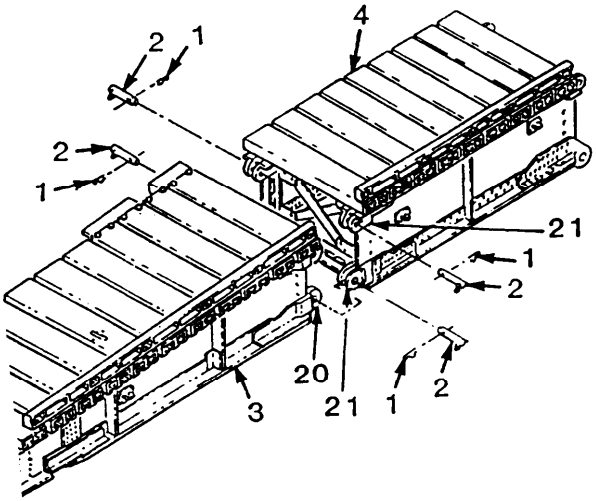

END OF TASK

FAR-SHORE CENTER SECTION REPLACEMENT (Sheet 1 of 4)

TOOLS/EQUIPMENT: General Mechanics Tool Box SC5180-90-N26
Lifting Device (8000 Ibs capacity)
Sling, Multiple Leg

SUPPLIES: None.

EQUIPMENT CONDITIONS: Cable Beam removed (pg 3-14).
Scissoring Cables and attaching hardware removed (pg 3-20).
Far-Shore Center Section Transverse Braces removed. (pg 3-39)
Quadrant removed (pg 3-43).
Near Shore Ramp Section removed (pg 3-46).
Far-Shore Ramp Section removed (pg 3-48).

PERSONNEL: Five

REMOVAL

REMOVE FAR-SHORE CENTER SECTIONS (4 AND 7).

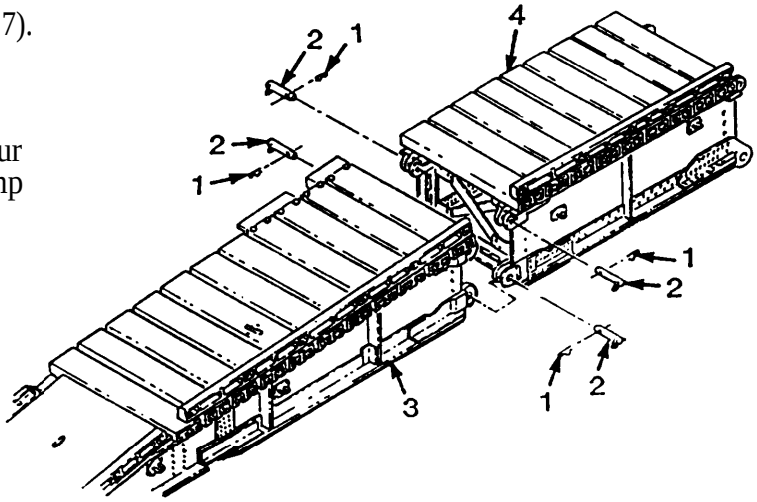

a. Remove four retaining pins (1) from four locking and connecting pins (2). Remove four locking and connecting pins (2) securing ramp section (3) to center section (4).

b. Using a lifting device and sling, separate ramp section (3) from adjoining center section (4) a distance of about 1 ft.

c. Perform steps b. and c. for opposite ramp.

WARNING

FRH hydraulic fluid may contain Tricresyl Phosphate (TCP) which, if taken internally, can cause paralysis. Hydraulic fluid may be absorbed through the skin. If hydraulic fluid gets on skin, wash with soap and water as soon as possible.

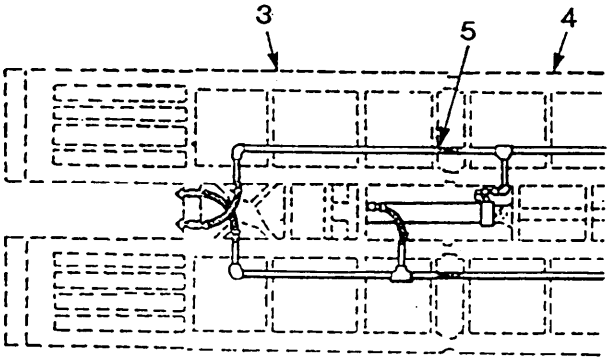

d. Disconnect flexible hydraulic line (5) from separated ramp section (3). Position line (5) out of harm's way.

e. Perform step d. for opposite ramp.

FAR-SHORE CENTER SECTION REPLACEMENT (Sheet 2 of 4)

f. Using lifting device and sling, move separated ramp section (3) aside.

g. Drive quadrant hinge pin (6) from center hinges of center sections (4 and 7) from the center outward.

h. Remove pin retainer (8) from connector pin (9). Remove pin (9) from top connecting points (10) of center sections (4 and 7).

i. Remove pin retainer (11) from center section pin (12). Remove pin (12) from center sections (4 and 7). Remove pin retainer (13) from connector pin (14). Remove pin (14) from connecting point (15) of center sections (4 and 7).

j. Using a lifting device and sling, separate center section about 1 ft from adjoining center section.

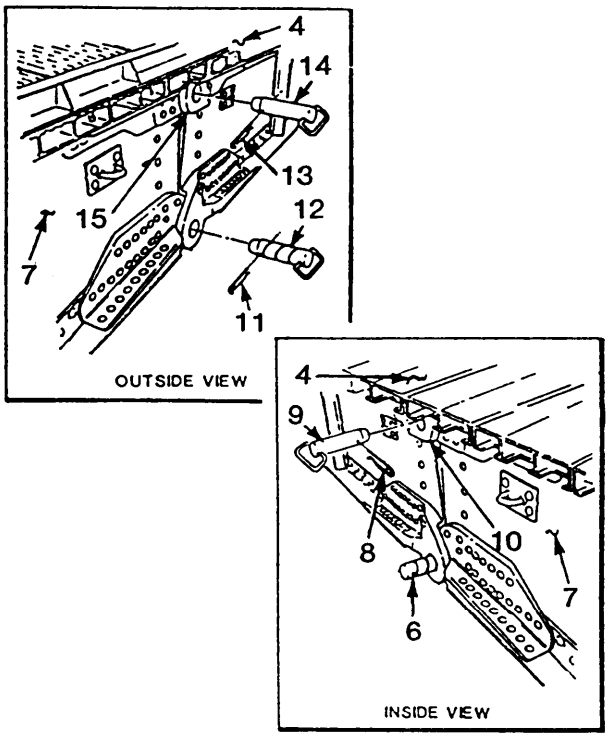

WARNING

FRH hydraulic fluid may contain Tricresyl Phosphate (TCP) which, if taken internally, can cause paralysis. Hydraulic fluid may be absorbed through the skin. If hydraulic fluid gets on skin, wash with soap and water as soon as possible.

k. Disconnect flexible hydraulic line (16) at connection point located on center section (4). Slide line (16) out of hose guide (17) and remove from bracing of center section (4).

l. Position flexible hydraulic line (16) out of harm's way on center section (7).

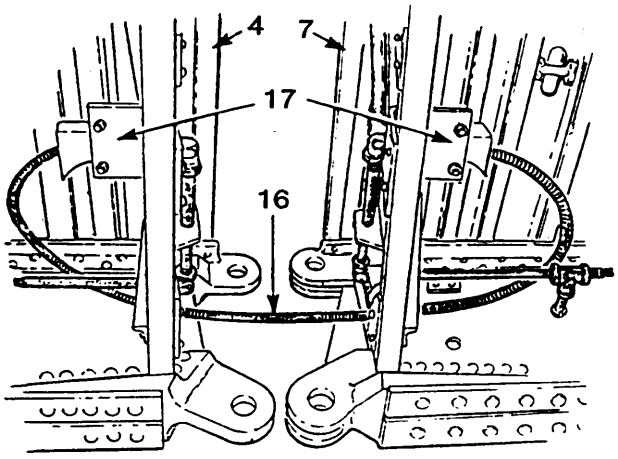

FAR-SHORE CENTER SECTION REPLACEMENT (Sheet 3 of 4)

m. Using a lifting device and sling, position damaged center section (4) aside.

INSTALLATION

INSTALL FAR-SHORE CENTER SECTION (4 AND 7).

a. Using a lifting device and sling, place the replacement center section about 1 ft from (and in line with) center sections (4 and 7) to be joined. Leave lifting device and sling attached.

b. Route flexible hydraulic line (16) located on center section (7) through hose guide (17) located on replacement section (4).

c. Connect end of flexible hydraulic line (16) to center section (4). Be sure connection is secure.

d. Using a lifting device, position replacement section (4) so connecting points (15 and 18) mate with other center section (7). Be sure flexible hydraulic line connected is not pinched.

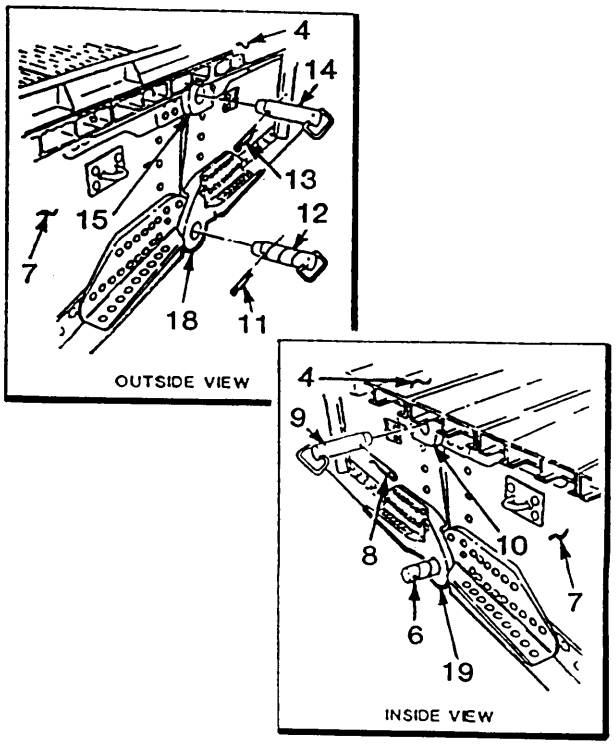

NOTE

Some side to side and up and down adjustment may be required to install connecting pins.

e. Install quadrant hinge pin (6) through lower center hinge point (19) of center sections (4 and 7).

f. Install center section pin (12) though lower center section hinge point (18). Install pin retainer (11) through pin (12).

g. Install connecting pin (14) through upper center section hinge connecting point (15) of center sections (4 and 7). Install pin retainer (13) in pin (14).

h. Install connecting pin (9) through center section connecting point (10). Install pin retainer (8) in pin (9).

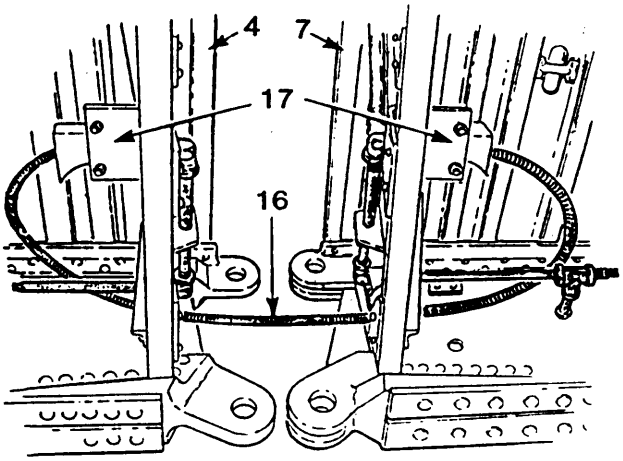

FAR-SHORE CENTER SECTION REPLACEMENT (Sheet 4 of 4)

i. Position ramp sections (3) so end connectors (20) mate with end connectors (21) of center section (4).

j. Install lower connecting pins (2) in ramp and center section end connectors. Install pin retainers (1) in connecting pin (2).

k. Install second lower connecting pins (2) in opposite side. Install second pin retainers (1) in second connecting pins (2).

l. Install upper connecting pins (2) in ramp and center section end connectors. Install pin retainer (1) in connecting pin (2).

m. Install second upper connecting pins (2) in opposite side. Install second pin retainers (1) in second connecting pins (2).

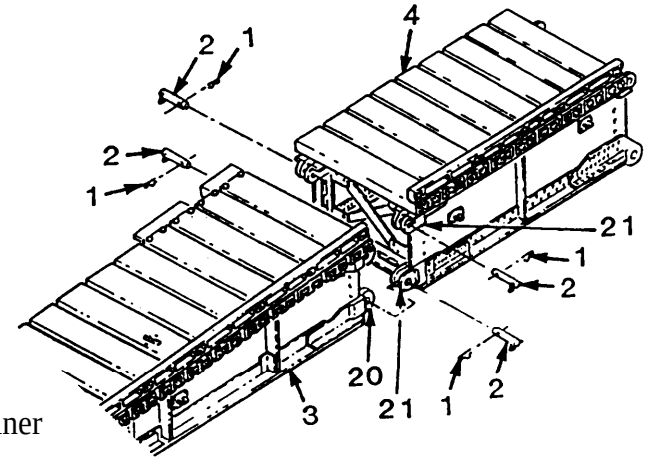

END OF TASK

CENTER SECTION DECK EXTRUSION REPLACEMENT (Sheet 1 of 3)

TOOLS/EQUIPMENT: General Mechanics Tool Box SC 5180-90-N26

SUPPLIES: Lock Washer (item 4, Appendix E) (three required).
Lock Washer (item 2, Appendix E)

EQUIPMENT CONDITIONS: Center Section Curb removed (pg 3-16).
Ramp Section removed (pg 3-46).

PERSONNEL: Five

REMOVAL

REMOVE CENTER SECTION DECK EXTRUSION (5 AND 12).

NOTE

- Some deck extrusions may be secured by curb hardware. It may be necessary to loosen some curb hardware in order to relieve pressure on the deck extrusions for removal.
- There are 13 different deck extrusions located on the bridge. Careful inspection of the deck extrusion removed and matching that extrusion with the match in TM 5-5420-203-24P is necessary to ensure the correct replacement is requested. Near fits, rounding of mounting holes, redrilling and/or alteration of deck extrusion and mounting girders or supports is not authorized.
- Alphabetical letters on deck extrusions are indicated to identify like and unlike extrusions.
- Access to the deck extrusions is very limited. It will be necessary for the mechanic to crawl underneath a separated bridge in order to gain access to some hardware.
- All deck extrusions may be removed and installed in the same manner as below.

a. Remove nut (l), lock washer (2) and flat washer (3) from screw (4) securing deck extrusion (5) to center section. Discard lock washer.

b. Remove flat washer (6) and screw (4) from deck extrusion (5).

c. Repeat step b. for remaining mounting hardware items (l), (2), (3), (4), and (6).

NOTE

Mechanic will have to access remaining deck extrusion mounting hardware from underneath the section.

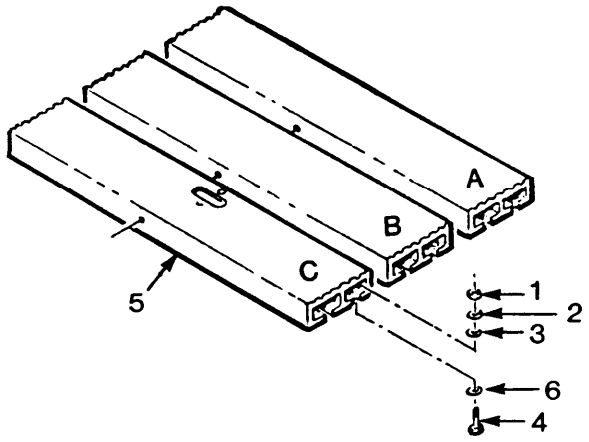

CENTER SECTION DECK EXTRUSION REPLACEMENT (Sheet 2 of 3)

d. Remove nut (7), lock washer (8), and flat washer (9), from screw (10) securing flat washer (11) in position between deck extrusions (5 and 12). Discard lock washer.

e. Slide screw (10) back until it releases flat washer (spacer) (11).

f. Remove flat washer (13) and screw (10) from deck extrusions (5 and 12).

g. Repeat steps d. thru f. as necessary to remove deck extrusions.

NOTE

Steps h. and i. are for removal of the lifting bar (14).

h. Remove two nuts (15) and two lock washers (16) securing lifting bar (14) in position. Discard lock washers.

i. Remove lifting bar (14) and two screws (17) from deck exTRUsion (5).

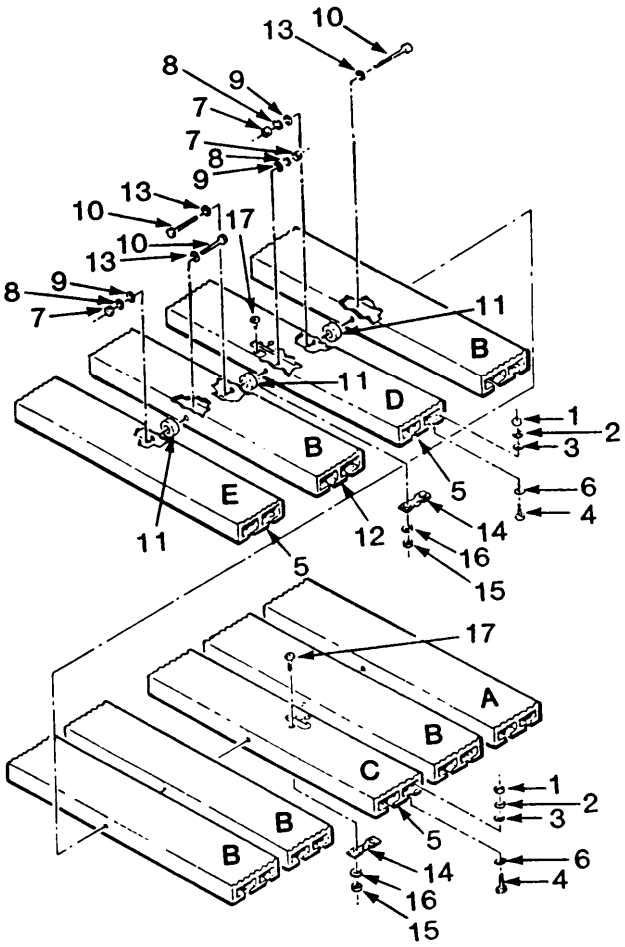

INSTALLATION

INSTALL CENTER SECTION DECK EXTRUSION (5 AND 12).

a. Inspect replacement deck extrusion to be sure it is the correct replacement and all mounting holes aline. Position deck extrusion under curb, if mounted.

b. Place flat washer (13) on screw (10). Position flat washer (spacer) (11) between deck extrusions (5 and 12) and aline with mounting holes.

c. Install screw (10) with flat washer (13) through deck extrusion (5), flat washer (spacer) (11) and deck extrusion (12).

d. Install flat washer (9) and new lock washer (8) on screw (10).

e. Thread nut (7) on screw (10). Tighten nut (7).

CENTER SECTION DECK EXTRUSION REPLACEMENT (Sheet 3 of 3)

f. Place flat washer (6) on screw (4). Install screw (4) from bottom side up through support girder and deck extrusion (5 or 12).

g. Install flat washer (3) and new lock washer (2) on installed screw (4). Thread nut (1) on screw (4). Tighten nut (l).

h. Repeat as necessary for remaining mounting hardware.

i. Position lifting bar (14) on underside of deck extrusion as shown.

j. Install two screws (17) from the topside down through mounting holes in deck extrusion and lifting bar (14).

k. Install two new lock washers (16) and two nuts (15) on two screws (17). Tighten nuts (15)0

1. Repeat as necessary for remaining hardware.

END OF TASK

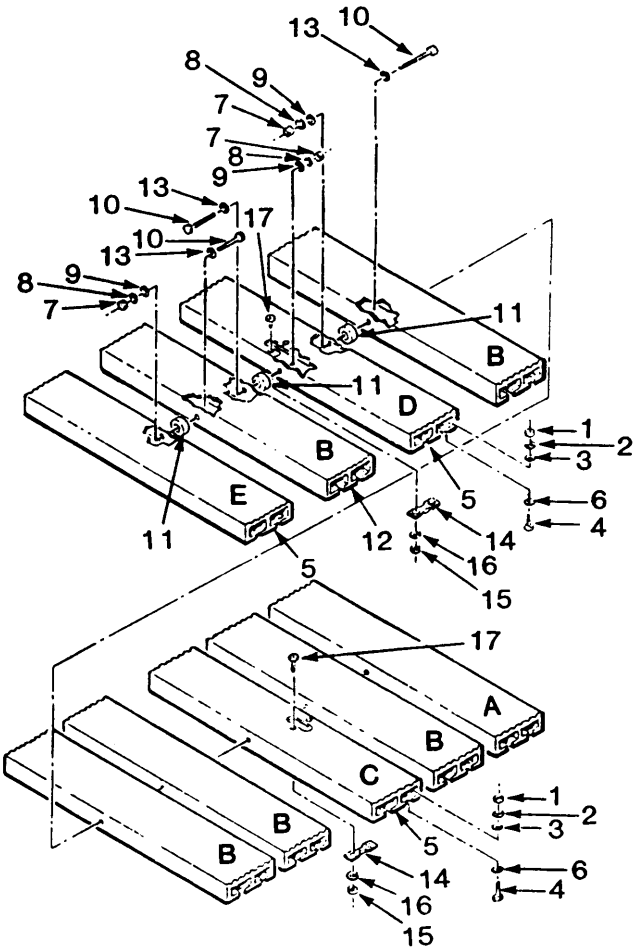

CENTER SECTION HARD HYDRAULIC PIPING REPLACEMENT (Sheet 1 of 3)

TOOLS/EQUIPMENT: General Mechanics Tool Box SC5180-90-N26

SUPPLIES: Loctite Pneumatic/Hydraulic Seal “569” (item 3, Appendix D)

EQUIPMENT CONDITIONS: Scissoring Cables and attaching hardware removed (pg 3-23).
Transverse Braces removed (pg 3-37).
Quadrant removed (pg 3-43).
Ramp Section removed (pg 3-46).

PERSONNEL: Five

REMOVAL

REMOVE CENTER SECTION HARD HYDRAULIC PIPING.

WARNING

FRH hydraulic fluid may contain Tricresyl Phosphate (TCP) which, if taken internally, can cause paralysis. Hydraulic fluid may be absorbed through the skin. If hydraulic fluid gets on skin, wash with soap and water as soon as possible.

NOTE

Many of the components listed are inaccessible when the bridge is launched flat and/or scissored. Consideration should be given to the benefits of replacing components that do not affect fit, form, or function until the bridge is overhauled.

a. Remove protective dust cover (1) from tube fitting (2).

b. Remove tube fitting (2) from elbow (3).

c. Remove elbow (3) from pipe nipple (4).

d. Remove pipe nipple (4) from elbow (5).

NOTE

Items (6) thru (11) are found on the female center section only. If disassembling female center section, continue with step e. If disassembling male center section, go to step 1.

e. Remove elbow (5) from pipe nipple (6).

f. Remove half quick-disconnect coupling (7) from elbow pipe (8).

g. Remove elbow pipe (8) from pipe nipple (9).

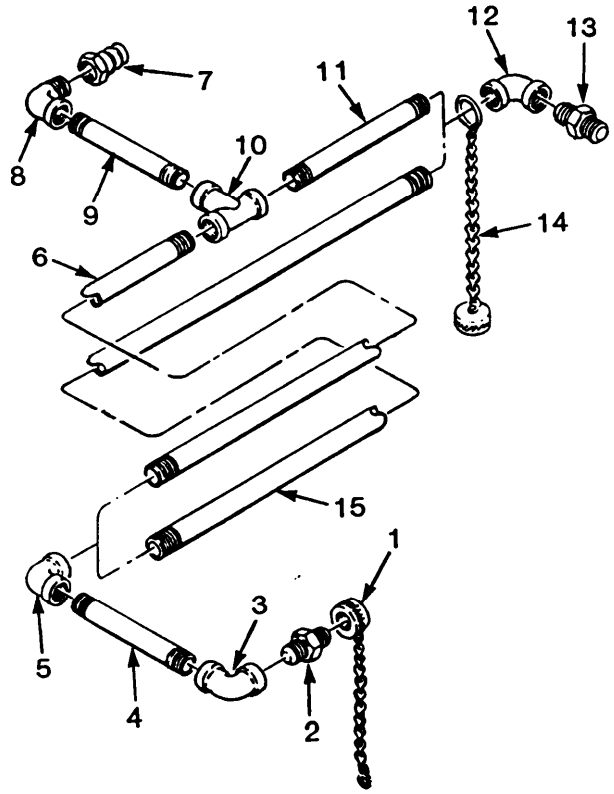

CENTER SECTION HARD HYDRAULIC PIPING REPLACEMENT (Sheet 2 of 3)

h. Remove pipe nipple (9) from tee (10).

i. Remove tee (10) from pipe nipple (11).

j. Remove nipple (11) from elbow (12).

k. Remove tube fitting (13) and protective dust cap (14) from elbow (12).

l. Retain protective dust cap (14) for reuse.

m. Remove nipple (15) from elbow (5).

n. Remove elbow (12) and protective dust cap (14) from pipe nipple (15).

o. Retain protective dust cover (14) for reuse.

p. Remove tube fitting (13) from elbow (12).

INSTALLATION

INSTALL CENTER **SECTION HARD HYDRAULIC PIPING.**

NOTE

It is critical that special care be taken so as to not flatten, score, or otherwise damage the threads of useable components during the replacement procedures. Apply Loctite Pneumatic/Hydraulic Seal "569" (or equivalent) to the threads of all pipe and fittings prior to installation.

Steps a. thru g. apply to the female center section only. If repairing a male center section, go to step h.

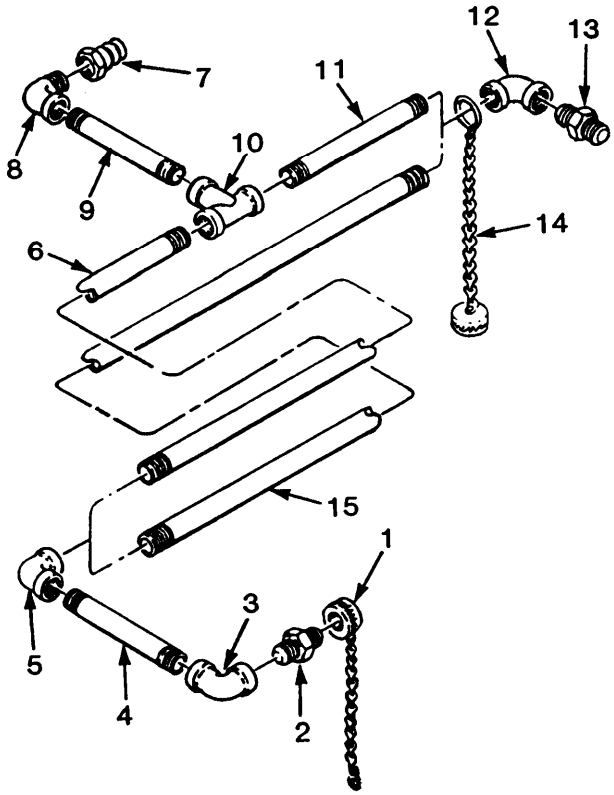

a. Thread half quick-disconnect coupling (7) in elbow pipe (8). Thread elbow pipe (8) on pipe nipple (9).

b. Thread nipple (9) in tee (10).

c. Thread pipe nipple (6) in tee (10).

d. Thread elbow (5) on nipple (6).

e. Thread pipe nipple (11) on tee (10).

f. Install protective dust cap (14) on nipple (11) **and secure by threading elbow (12) on nipple (11).**

CENTER SECTION HARD HYDRAULIC PIPING REPLACEMENT (Sheet 3 of 3)

g. Thread tube fitting (13) in elbow (12). Perform steps h. thru n. below.

h. Thread tube fitting (13) in elbow (12).

i. Install protective dust cap (14) on pipe nipple (15) and secure by threading elbow (12) on pipe nipple (15).

j. Thread elbow (5) on nipple (15).

k. Thread pipe nipple (4) in elbow (5).

l. Thread elbow (3) on pipe nipple (4).

m. Thread tube fitting (2) in elbow (3).

n. Install protective dust cap (1) on tube fitting (2).

END OF TASK

CENTER SECTION MISCELLANEOUS COMPONENTS REPLACEMENT (Sheet 1 of 3)

TOOLS/EQUIPMENT: General Mechanics Tool Box SC 5180-90-N26

SUPPLIES: Lock Washer (item 2, Appendix E) (three required).
Lock Washer (item 3, Appendix E) (two required)
Lock Washer (item 4, Appendix E) (nine required)

EQUIPMENT CONDITIONS: Scissoring Cables and attaching hardware removed (pg 3-23).
Transverse Braces removed. (pg 3-37).
Quadrant removed (pg 3-43).
Ramp Section removed (pg 3-46).

PERSONNEL: Five

REMOVAL

REMOVE CENTER SECTION MISCELLANEOUS COMPONENTS.

a. Remove nut (1) with lock washer (2) from screw (3) securing male hose guide (4) to center section (5). Discard lock washer.

b. Remove nut (6), lock washer (7), spring retainer (8) and flat washer (9) from screw (10). Discard lock washer.

c. Remove nut (11) and lock washer (12) from screw (13) securing female flexible hose guide (14) to center section (5). Discard lock washer.

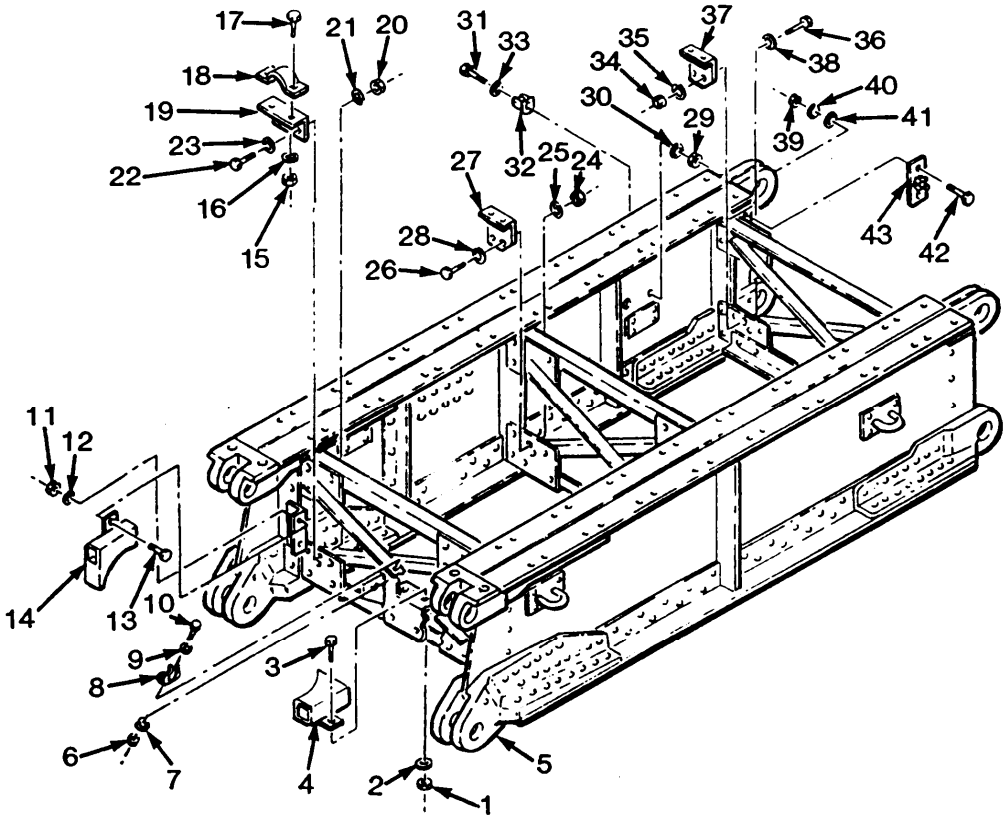

CENTER SECTION MISCELLANEOUS COMPONENTS REPLACEMENT (Sheet 2 of 3)

d. Remove two nuts (15) and two lock washers (16) from two screws (17) holding pipe anchor clamp (18) to angle bracket (19). Discard lock washers.

e. Remove two nuts (20) and two lock washers (21) from two screws (22). Remove angle bracket (19). Remove two flat washers (23) and two screws (22) from center section (5). Discard lock washers.

f. Remove two nuts (24) and two lock washers (25) from two screws (26). Remove angle bracket (27). Remove two flat washers (28) and two screws (26) from center section (5).Discard lock washers.

g. Remove nut (29) and lock washer (30) from screw (31). Remove spring tension clip (32), flat washer (33), and screw (31) from center section (5). Discard lock washer.

h. Remove two nuts (34) and two lock washers (35) from two screws (36). Remove angle bracket (37). Remove two flat washers (38) and two screws (36) from center section (5). Discard lock washers.

i. Remove two nuts (39), two lock washers (40), two flat washers (41), and two screws (42) securing pipe flange (43) to center section (5). Remove pipe flange (43) from center section (5). Discard lock washers.

INSTALLATION

INSTALL CENTER SECTION MISCELLANEOUS COMPONENTS.

a. Position male hose guide (4) in position on center section (5). Secure by placing screw (3) through guide (4) and section (5). Install new lock washer (2) on screw (3) and secure with nut (1). Tighten securely.

b. Position spring retainer (8) on center section (5). Place flat washer (9) on screw (10) and through retainer (8) and center section (5). Install new lock washer (7) and nut (6) on screw (10). Tighten nut (6).

c. Position female flexible hose guide (14) on center section (5). Install screw (13) through mounting bracket of hose guide and mounting hole on section (5). Install new lock washer (12) and nut (11) on screw (13). Tighten nut (11).

d. Place two flat washers (23) on two screws (22). Position angle bracket (19) on center section (5). Install two screws (22) through angle bracket and center section (5). Install two new lock washers (21) and two nuts (20) on two screws (22). Tighten nuts (20).

CENTER SECTION MISCELLANEOUS COMPONENTS REPLACEMENT (Sheet 3 of 3)

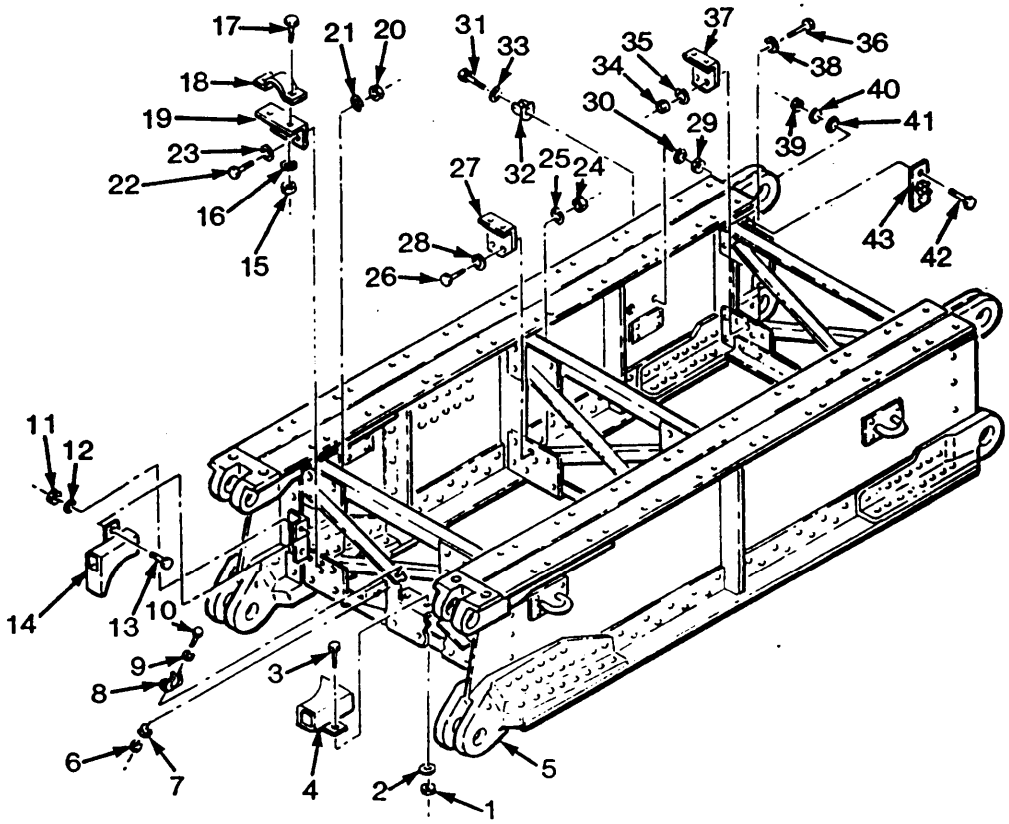

e. Place two screws (17) through pipe anchor clamp (18). Position clamp on center section (5). Install two new lock washers (16) and two nuts (15) on two bolts (17). Tighten nuts (15).

f. Place two flat washers (28) on two screws (26). Position angle bracket (27) on center section (5). install two screws (26) through angle bracket and center section (5). Install two new lock washers (25) and two nuts (24) on two screws (26). Tighten screws (26).

g. Place flat washer (33) on screw (31). Install screw (31) through spring tension clip (32). Install screw, flat washer, and spring tension clip in mounting hole located on center section (5). Place new lock washer (30) and nut (29) on screw (31). Tighten nut (29).

h. Place two flat washers (38) on two screws (36). Insert two screws (36) in angle bracket (37). Place screws in mounting hole on center section (5). Place two new lock washers (35) and two nuts (34) on two screws (36). Tighten nuts (34).

i. Place two screws (42) in pipe flange (43) and install on center section (5). Place two flat washers (41), two new lock washers (40), and two nuts (39) on two screws (42). Tighten nuts (39).

END OF TASK

3-13. MAINTENANCE INSTRUCTIONS FOR MLC70.

SECTION INDEX

PROCEDURE	PAGE
Tie Rod Replacement	3-77
Cable Beam Replacement	3-77
Curb Replacement (Male and Female)	3-77
Scissoring Cables and Attaching Hardware Replacement	3-77
Bridge Section Replacement (Male and Female)	3-78
Hydraulic Cylinder Replacement	3-78
Hydraulic Cylinder Components Replacement	3-78
Hydraulic Cylinder Hydraulic Lines and Fittings Replacement	3-78
Cylinder Beam Replacement.	3-78
Flexible Hydraulic Lines Replacement (Diaphragm & Hydraulic Cylinder)	3-78
Lateral Brace Replacement (Near-Shore and Far-Shore).	3-78
Rear Transverse Braces Replacement (Near-Shore).	3-78
Rear Transverse Braces Replacement (Far-Shore)	3-78
Forward Transverse Braces Replacement (Near-Shore)	3-78
Forward Transverse Braces Replacement (Far-Shore)	3-78
Quadrant Replacement	3-79
Near-Shore Diaphragm Replacement	3-79
Far-Shore Diaphragm Replacement	3-79
Deck Extrusion Replacement (Male and Female).	3-79
Hard Hydraulic Piping Replacement (Male and Female).	3-79
Miscellaneous Components Replacement (Male and Female).	3-80

TIE ROD REPLACEMENT: For tie rod removal and replacement refer to Section Index of Paragraph 3-12, Maintenance Instructions for MLC60.

CABLE BEAM REPLACEMENT. For removal and replacement of cable beam refer to Section Index of Paragraph 3-12, Maintenance Instructions for MLC60.

CURB REPLACEMENT. For curb removal and installation refer to Section Index of Paragraph 3-12, Maintenance Instructions for MLC60.

SCISSORING CABLES and ATTACHING HARDWARE REPLACEMENT. For scissoring cables and attaching hardware removal and installation refer to Section Index of Paragraph 3-12, Maintenance Instructions for MLC60.

BRIDGE SECTION REPLACEMENT (MALE AND FEMALE). For bridge section removal and installation refer to Near-Shore Center Replacement and Far-Shore Center Section Replacement while excluding the mating of center section to ramp section.

HYDRAULIC CYLINDER REPLACEMENT. For hydraulic cylinder replacement refer to Section Index of Paragraph 3-12, Maintenance Instructions for MLC60.

HYDRAULIC CYLINDER COMPONENTS REPLACEMENT. For hydraulic cylinder components removal and installation refer to Section Index of Paragraph 3-12, Maintenance Instructions for MLC60.

HYDRAULIC CYLINDER HYDRAULIC LINES and FITTINGS REPLACEMENT. For removal and installation of hydraulic cylinder hydraulic lines and fittings refer to Section Index of Paragraph 3-12, Maintenance Instructions for MLC60.

CYLINDER BEAM REPLACEMENT. For removal and installation of cylinder beam refer to Section Index of Paragraph 3-12, Maintenance Instructions for MLC60.

FLEXIBLE HYDRAULIC LINES REPLACEMENT (DIAPHRAGM & HYDRAULIC CYLINDER). For removal and installation of flexible hydraulic lines refer to Section Index of Paragraph 3-12, Maintenance Instructions for MLC60.

LATERAL BRACE REPLACEMENT (NEAR-SHORE AND FAR-SHORE). For removal and installation of lateral brace refer to Section Index of Paragraph 3-12, Maintenance Instructions for MLC60.

REAR TRANSVERSE BRACES REPLACEMENT (NEAR-SHORE). For removal and installation of near-shore rear transverse braces refer to Section Index of Paragraph 3-12, Maintenance Instructions for MLC60.

REAR TRANSVERSE BRACES (FAR-SHORE). For removal and installation of far-shore rear transverse braces refer to Section Index of Paragraph 3-12, Maintenance Instructions for MLC60.

FORWARD TRANSVERSE BRACES REPLACEMENT (NEAR-SHORE). For removal and installation of forward transverse braces refer to Section Index of Paragraph 3-12, Maintenance Instructions for MLC60.

FORWARD TRANSVERSE BRACES REPLACEMENT (FAR-SHORE). For removal and installation of forward transverse refer to Section Index of Paragraph 3-12, Maintenance Instructions for MLC60. Exclude the equipment condition of center section removal.

QUADRANT REPLACEMENT. For removal and installation of quadrant refer to Section Index of Paragraph 3-12, Maintenance Instructions for MLC60.

NEAR-SHORE DIAPHRAGM REPLACEMENT. For removal and installation of near-shore diaphragm refer to Section Index of Paragraph 3-12, Maintenance Instructions for MLC60.

FAR-SHORE DIAPHRAGM REPLACEMENT. For removal and installation of far-shore diaphragm refer to Section Index of Paragraph 3-12, Maintenance Instructions for MLC60.

DECK EXTRUSION REPLACEMENT (MALE and FEMALE). For removal and installation of deck extrusions refer to Section Index of Paragraph 3-12, Maintenance Instructions for MLC60.

HARD HYDRAULIC PIPING REPLACEMENT (MALE and FEMALE). For removal and installation of hard hydraulic piping refer to Section Index of Paragraph 3-12, Maintenance Instructions for MLC60. The following section of piping has been added to the MLC 70 while excluding the nipples used to connect the flexible tubing from the ramp section to the female section on the MLC 60.

WARNING

FRH hydraulic fluid may contain Tricresyl Phosphate (TCP) which, if taken internally can cause paralysis. Hydraulic fluid may be absorbed through the skin. If hydraulic fluid gets on skin, wash with soap and water as soon as possible.

a. Loosen nut of union (4). Remove union halves from two nipples (3). Remove union nut

b. Remove pipe nipple (3) from elbow (2).

c. Remove elbow (2) from pipe (1).

d. Repeat steps b and c for remaining piping.

NOTE

Apply Loctite Pneumatic/Hydraulic Seal "569" (or equivalent) to the threads of all pipe and fittings prior to installation.

e. Thread elbows (2) onto pipe (1).

f. Measure, cut to length, thread nipples (3) as required.

g. Thread nipples (3) into elbows (2).

h. Install halves of union (4) onto nipples (3) and connect with union nut. Tighten as necessary.

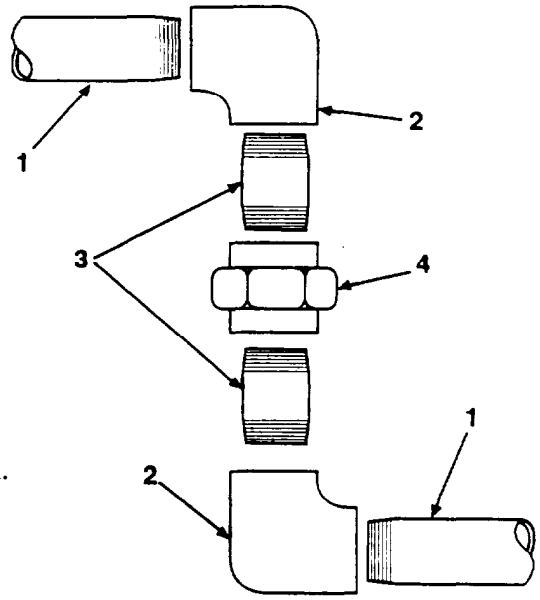

MISCELLANEOUS COMPONENT REPLACEMENT (MALE and FEMALE). For removal and installation of miscellaneous components common to the MLC 60 and MLC 70 refer to Section Index of Paragraph 3-12, Maintenance Instructions for MLC60. For removal and installation procedures for miscellaneous components which are on the MLC 70 only refer to the following procedures.

REMOVAL

REMOVE MALE OR FEMALE SECTION WEIGHT LIMIT SIGNS OR LIFTING BRACKETS.

a. Remove two locknuts (4) from two screws (3) holding weight limit sign assembly (1) to transverse brace (2). Remove weight limit sign assembly (1).

b. Discard two locknuts (4).

c. Remove six locknuts (5) from screws (7). Remove six screws (7) from lifting bracket (6), and retaining plate (9). Remove lifting bracket (6). Discard locknuts.

INSTALLATION

INSTALL WEIGHT LIMIT SIGNS OR LIFTING BRACKETS.

a. Insert two screws (3) thru weight limit sign assembly (1) and transverse brace (2). Install two new locknuts (4) on two screws (3). Tighten two locknuts (4).

b. Place six screws (7) thru lifting bracket (6) retaining plate (9), and bridge section (8). Install six new locknuts (5) on six screws (7). Tighten six locknuts (5).

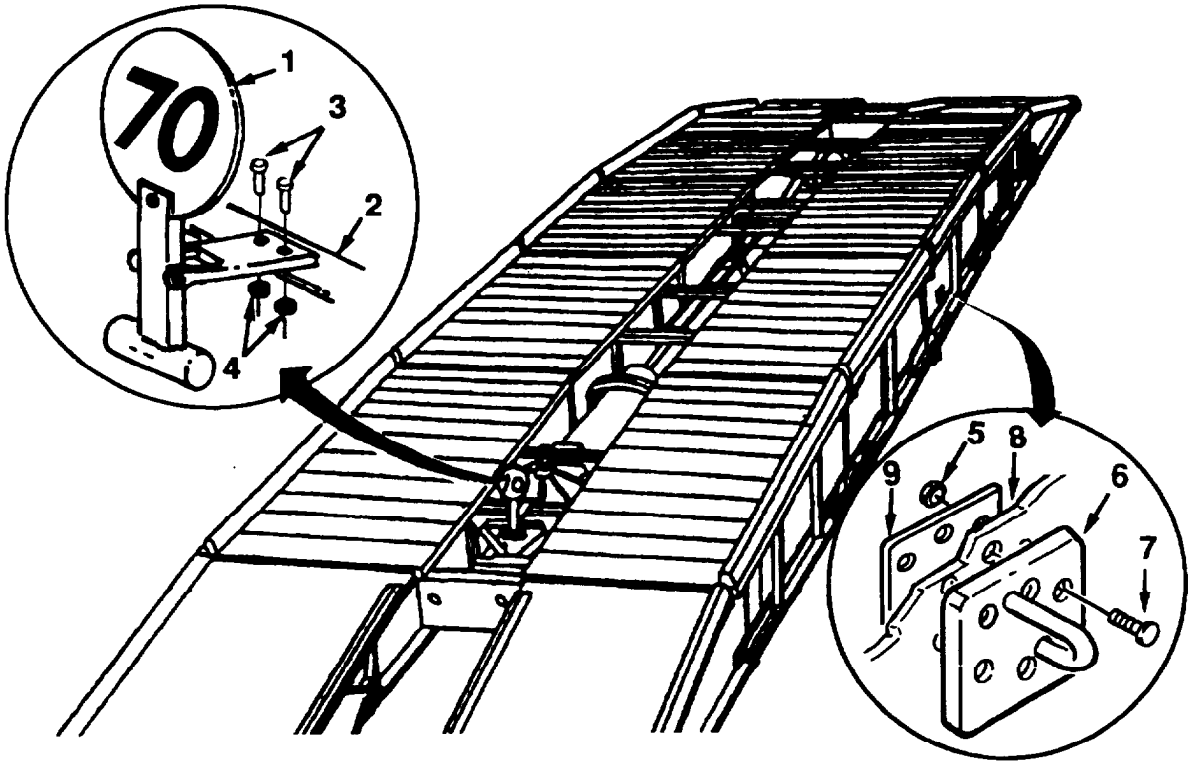

CHAPTER 4

DIRECT SUPPORT AND GENERAL SUPPORT MAINTENANCE

Section I. REPAIR PARTS; SPECIAL TOOLS; TEST, MEASUREMENT, AND DIAGNOSTIC EQUIPMENT (TMDE); AND SUPPORT EQUIPMENT

4-1. COMMON TOOLS AND EQUIPMENT. For authorized common tools and equipment, refer to the Modified Table of Organization and Equipment (MTOE) applicable to your unit.

4-2. SPECIAL TOOLS, TMDE, AND SUPPORT EQUIPMENT. Refer to the Maintenance Allocation Chart, Appendix B, of this manual and TM 5-5420-203-24P.

4-3. REPAIR PARTS. Repair parts are listed and illustrated in TM 5-5420-203-24P.

Section II. HYDRAULIC CYLINDER MAINTENANCE

4-4. GENERAL. This section contains maintenance instructions authorized by the Maintenance Allocation Chart (Appendix B) to direct support (DS) and general support (GS) maintenance levels. In addition to the maintenance functions listed, DS and GS maintenance personnel can perform all tasks at both operator and unit levels.

4-5. MAINTENANCE INSTRUCTIONS

TOOLS/EQUIPMENT:	General Mechanics Tool Box SC 5180-90-N26 Wrench, Cylinder Rod, (item 1, Appendix B) Wrench, Spanner (item 2, Appendix B)
SUPPLIES:	Preformed Packing (item 7, Appendix E) Wiper Ring (item 9, Appendix E) Wiper Ring (item 8, Appendix E)
EQUIPMENT CONDITIONS:	None.
PERSONNEL:	Two

4-5. MAINTENANCE INSTRUCTIONS - CONT

a. Disassembly.

WARNING

FRH hydraulic fluid may contain Tricresyl Phosphate (TCP) which, if taken internally, can cause paralysis. Hydraulic fluid may be absorbed through the skin. If hydraulic fluid gets on skin, wash with soap and water as soon as possible.

(1) Using cylinder rod and spanner wrenches, remove clevis (1) from hydraulic cylinder rod (2).

(2) Remove four screws (3) from retaining plate (4) securing wiper ring (5) to cylinder bushing (6). Remove and discard wiper ring (5).

(3) Remove cylinder bushing (6) from land ring flange (7).

(4) Remove wiper ring (8) from cylinder bushing (6). Discard wiper ring (8).

(5) Remove eight cap screws (9) from land ring flange (7).

(6) Remove land ring flange (7) and separate spacer ring (10) and preformed packing (11) from packing assembly (12) Discard preformed packing.

(7) Remove packing assembly (12) from launching cylinder head (13).

(8) No further disassembly of the hydraulic cylinder is authorized at this level of maintenance.

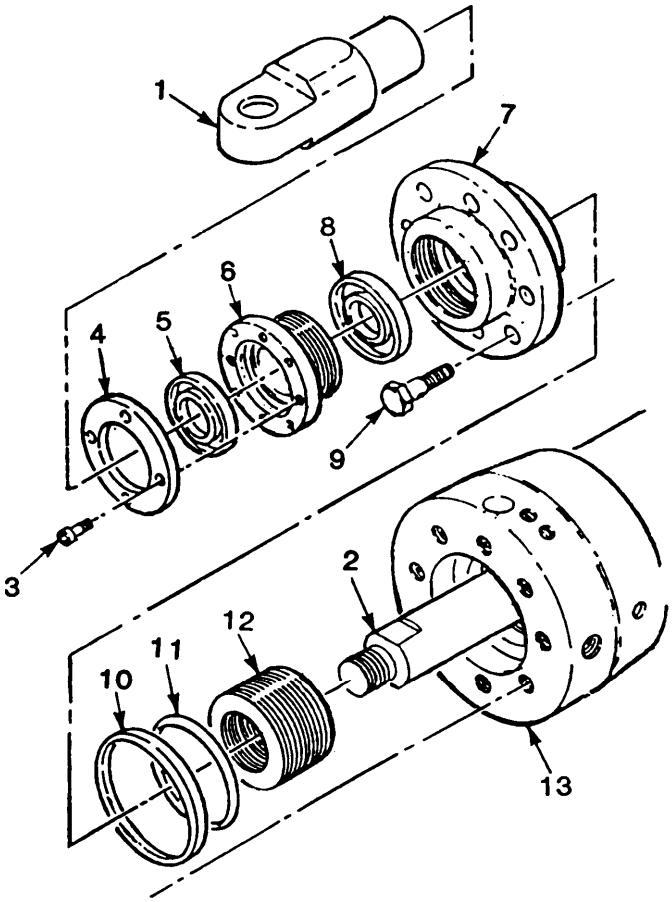

b. Assembly.

(1) Place packing assembly (12) in land ring flange (7).

(2) Place spacer ring (10) and new preformed packing (11) over backside of land ring flange (7).

(3) Install land ring flange (7) with spacer ring (10), new preformed packing (11), and packing assembly (12) in launching cylinder head (13).

(4) Install eight cap screws (9) in land ring flange (7). Tighten screws (9). Install new wiper ring (8) in land ring flange (7).

(5) Thread cylinder bushing (6) in land ring flange (7). Install new wiper ring (5) in cylinder bushing (6).

(6) Install retaining plate (4) alining holes with cylinder bushing (6). Install four screws (3) securing retaining plate and assembly. Tighten four screws (3).

(7) Using cylinder rod and spanner wrenches, install clevis (1) on cylinder rod (2).

END OF TASK

4-6. HEU MAINTENANCE INSTRUCTIONS

TOOLS/EQUIPMENT: General Mechanics Tool Box SC 5180-90-N26
Wrench, Cylinder Rod, (item 1, Appendix B)
Wrench, Spanner (item 2, Appendix B)
Installation, Tool seal pack (item 4, Appendix B)
SUPPLIES: Kit, Overhaul, Scissoring Cylinder (item 11, Appendix E)
EQUIPMENT CONDITIONS: Equalizer plate removed (page 3-20)

PERSONNEL: Two

a. Disassembly.

WARNING

FRH hydraulic fluid may contain Tricresyl Phosphate (TCP) which, if taken internally, can cause paralysis. Hydraulic fluid may be absorbed through the skin. If hydraulic fluid gets on skin, wash with soap and water as soon as possible.

(1) Using cylinder rod and spanner wrenches, remove clevis (1) from hydraulic cylinder rod (2).

(2) Remove four screws (3) from retaining plate (4) securing scraper (5) to cylinder bushing (6). Remove and discard scraper (5).

(3) Remove cylinder bushing (6) from land ring flange (7).

(4) Remove wiper ring (8) from cylinder bushing (6). Discard wiper ring (8).

(5) Remove eight cap screws (9) from land ring flange (7).

(6) Remove land ring flange (7) and separate retainer (10) and O-ring (11) from ring flange (7) Discard O-ring (11) and retainer (10).

(7) Remove seal pack assembly (12) from launching cylinder head (13).

NOTE

No further disassembly of the hydraulic cylinder is authorized at this maintenance level.

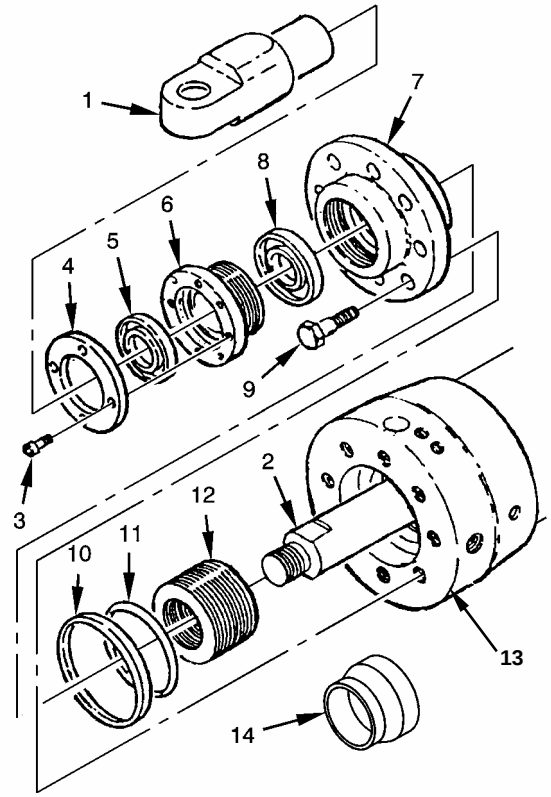

4-6. HEU MAINTENANCE INSTRUCTIONS - CONT

b. Assembly.

(1) Place installation tool (14) on hydraulic cylinder rod (2).

(2) Place new seal pack assembly (12) into cylinder head (13) land ring flange (7).

(3) Place new retainer (10) and new O-ring (11) onto land ring flange (7).

(4) Install land ring flange (7) into launching cylinder head (13).

(5) Install eight cap screws (9) in land ring flange (7). Tighten screws (9).

(6) Install new wiper ring (8) in land ring flange (7).

(7) Thread cylinder bushing (6) into land ring flange (7).

(8) Install new scraper (5) in cylinder bushing (6).

(9) Remove seal pack installation tool (14).

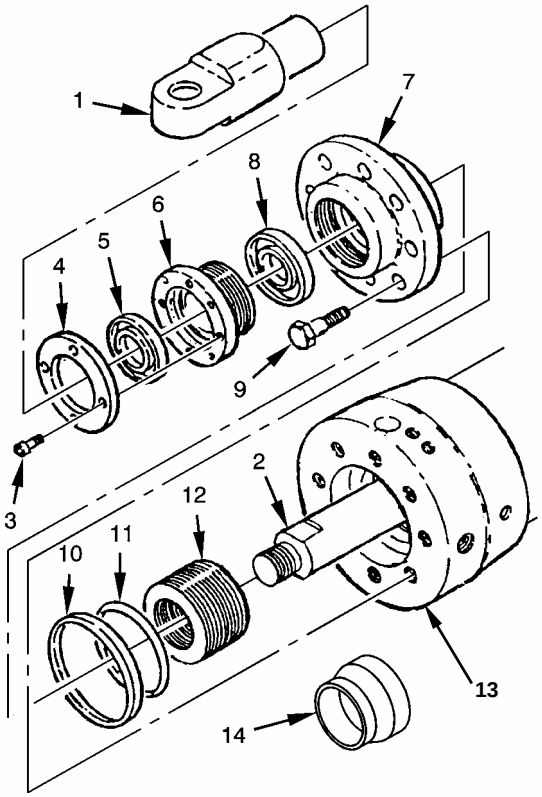

(10) Install retaining plate (4) alining holes with cylinder bushing (6). Install four screws (3) securing retaining plate and assembly. Tighten four screws (3).

(11) Using cylinder rod and spanner wrenches, install clevis (1) on cylinder rod (2).

CHAPTER 5

ADMINISTRATIVE STORAGE OR SHIPMENT

5-1. ADMINISTRATIVE STORAGE. Administration storage is accomplished in one of two modes; long term or standby.

Long Term Mode. Bridge long term storage (War Reserves) is usually depot storage in an area out of the elements and includes periodic checks to determine equipment condition.

Standby Mode. Bridge standby storage maintains the bridge in an "immediately available" condition. This mode can be accomplished with the bridge launcher-mounted or the bridge without the launcher.

Standby Mode-Bridge Launcher- Mounted. Perform vehicle PMCS (TM 5-5420-202-20 or TM 5-5420-226-20). Perform bridge PMCS (page 2-3) . Perform bridge lubrication instructions (page 3-1). Coat all surfaces of pins, cables, etc., with a light film of petroleum to retard corrosion. Ensure all pins, pin retainers, etc., necessary for the operation of the bridge are maintained with the bridge or stored in an appropriate place. Exercise the bridge a minimum of one time each month (TM 5-5420-202-10 or TM 5-5420-226-10). Exercise consists of a series of three launchings and retrievals. After the last retrieval, check the connecting points, hydraulic hoses, and connectors for leaks or damage. Report any discrepancies found on DA Form 2404, Equipment Inspection and Maintenance Worksheet. Fill in all necessary blanks and explain the problem fully.

Standby Mode-Bridge Without Launcher. Perform bridge PMCS (page 2-3) . Perform bridge lubrication instructions (page 3-1). Coat all surfaces of pins, cables, etc., with a light film of petroleum to retard corrosion. Ensure all pins, pin retainers, etc., necessary for the operation of the bridge are maintained with the bridge or stored in an appropriate place. Bridge standby storage can be in either the launched position or in the clamshell position.

*a. Launched Position***.** Store the bridge laying flat on a firm surface such as the Unit's compound or a concrete surface. If storing the bridge on concrete, place two light wood blocks under the bottom center hinge points in the middle of the bridge (figure 5-1, view A). This will reduce the wear on these two critical areas. If the bridge is to be stored for a period in excess of 30 days, place wood blocking supports under the hydraulic cylinder (figure 5-1, view B) to distribute the weight placed on the hydraulic seal by the extended cylinder arm.. Periodic checks of the bridge and the hardware shall be performed to ensure no items have been removed.

b. Clamshell Position. Before positioning the bridge, raise the bridge to a near vertical position and secure the tie rods together with a 3/8-inch chain or wire rope (figure 5-2, view A). . Store the bridge on a firm surface such as hard sand or earth. Position the bridge in the storage area with wooden blocks supporting the rear of the bridge (figure 5-2, view B). This will permit the launcher to engage or disengage the bridge without damaging the tie rods. Do not remove the tie rod chains during storage period.

The bridge can stay in a standby mode almost indefinitely. The bridge and its hydraulics shall be exercised a minimum of once each month. This exercise shall consist of a series of three retrievals and launchings. At the completion of the second launch and prior to the final extension of the bridge, inspect the bridge for obvious faults as addressed in PMCS. Report any discrepancies found on DA Form 2404, Equipment Inspection and Maintenance Worksheet. Fill in all necessary blanks and explain the problem fully. After the repairs, if any, are completed, the bridge is once again in a standby mode.

5-2. SHIPMENT. For information on how to transport the bridge, refer to Chapter 2.

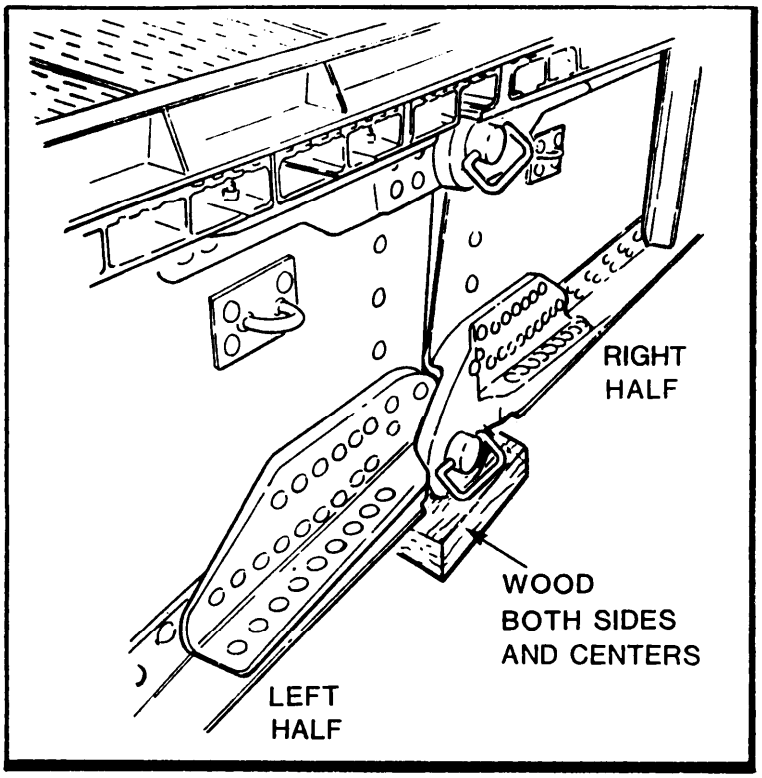

VIEW A

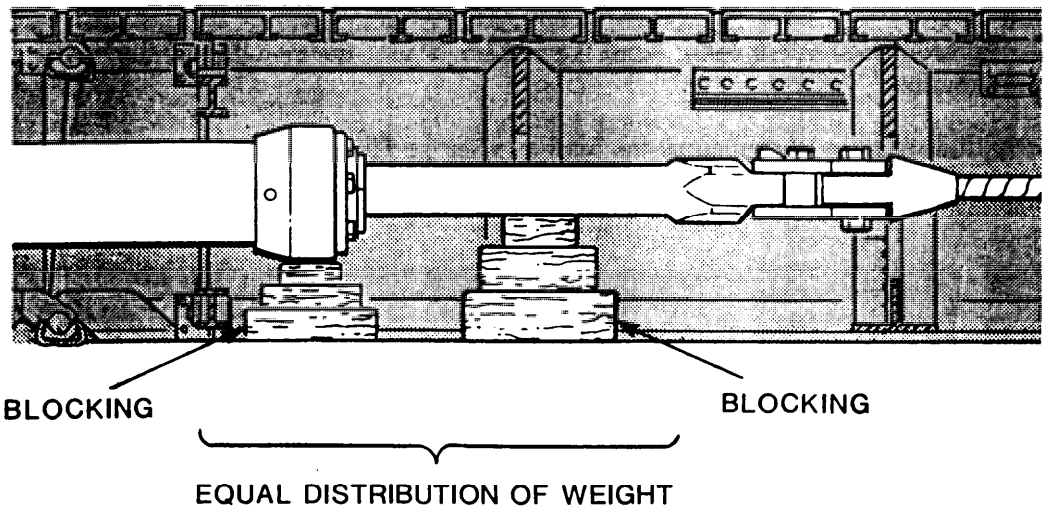

NOTE NEAR SECTION NOT SHOWN FOR CLARITY

VIEW B

FIGURE 5-1. Placement of Wear Protectors and Scissor Cylinde

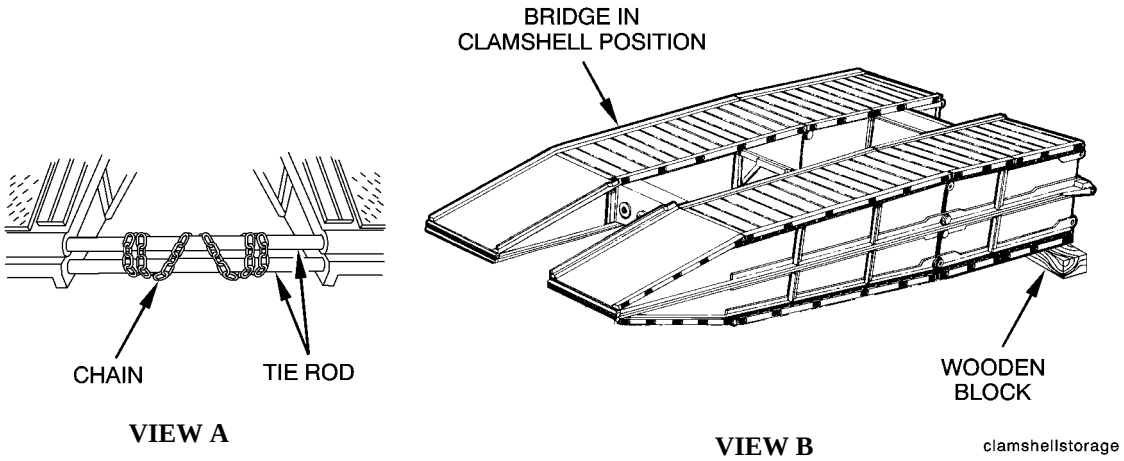

FIGURE 5-2. Standby Mode Storage-Clamshell Position.

APPENDIX A

REFERENCES

A-1. SCOPE. This appendix lists all form field manuals, technical manuals, and miscellaneous publications referenced in this manual.

A-2. FORMS.

Quality Deficiency Report ..... SF 368
Recommended Changes to DA Publications ..... DA Form 2028
Recommended Changes to Equipment Technical Publications ..... DA Form 2028-2
Equipment Inspection and Maintenance Worksheet ..... DA Form 2404

A-3. FIELD MANUAL.

Route Reconnaissance and Classification ..... FM 5-36
First Aid for Soldiers FM21-11

A-4. TECHNICAL MANUALS.

Destruction of Army Materiel to Prevent Enemy Use ..... TM 750-244-6
Military Fixed Bridges TM5-312
Operator's Manual, Launcher and M60A1 Tank Chassis, Transporting: For Bridge, Armored-Vehicle-Launched, Scissoring Type, Class 60 (5420-00-889-2020) ..... TM 5-5420-202-10
Organization, Direct Support & General Support RPSTL (including Depot maintenance Repair Parts) for Bridge, Armored-Vehicle Launched; Scissoring Type, Class 60, Aluminum 60 foot span; for use with M48 & M60 Launched (5420-00-522-9599) TM5-5420-203-24P
Operator's Manual, Launched and M48A5 Tank Chassis, Transporting: for Bridge, Armored-Vehicle-Launched, Scissoring Type, Class 60 (5420-01-076-6096) TM5-5420-226-10

A-5. MISCELLANEOUS PUBLICATIONS.

Corrosion Resistant Coating ..... MIL-C-l 1080
Expendable/Durable Items (Except Medical, Class V, Repair Parts, and Heraldic Items) CTA-50-970
Army Maintenance Management System (TAMMS) ..... DA Pam 738-750

APPENDIX B

MAINTENANCE ALLOCATION CHART

Section I. INTRODUCTION

B-1. GENERAL

a. This section provides a general explanation of all maintenance and repair functions authorized at various maintenance categories.

b. The Maintenance Allocation Chart (MAC) in section II designates overall authority and responsibility for the performance of maintenance functions on the identified end item or component. The application of the maintenance functions to the end item or component will be consistent with the capabilities of the designated maintenance categories.

c. Section III lists the tools and test equipment (both special tools and common tool sets) required for each maintenance function as referenced from section II.

d. Section IV contains supplemental instructions and explanatory notes for a particular maintenance function.

B-2. MAINTENANCE FUNCTIONS. Maintenance functions will be limited to and defined as follows:

a. Inspect. To determine the serviceability of an item by comparing its physical, mechanical, and/or electrical characteristics with established standards through examination (e.g., by sight, sound, or feel).

b. **Test.** To verify serviceability by measuring the mechanical, pneumatic, hydraulic, or electrical characteristics of an item and comparing those characteristics with prescribed standards.

c. **Service.** Operations required periodically to keep an item in proper operating condition, i.e., to clean (includes decontaminate, when required), to preserve, to drain, to paint, or to replenish fuel, lubricants, chemical fluids, or gases.

d. Adjust. To maintain or regulate, within prescribed limits, by bringing into proper or exact position, or by setting the operating characteristics to specified parameters.

e. Aline. To adjust specified variable elements of an item to bring about optimum or desired performance.

f. **Calibrate.** To determine and cause connections to be made or to be adjusted on instrument or test, measuring, and diagnostic equipments used in precision measurement. Consists of comparisons of two instruments, one of which is a certified standard of known accuracy, to detect and adjust any discrepancy in the accuracy of the instrument being compared.

g. Remove/Install. To remove and install the same item when required to perform service or other maintenance functions. Install may be the act of emplacing, seating, or fixing into position a spare, repair part, or module (component or assembly) in a manner to allow the proper functioning of an equipment or system.

B-2. MAINTENANCE FUNCTIONS - CONT.

h. **Replace.** To remove an unserviceable item and install a serviceable counterpart in its place. "Replace" is authorized by the MAC and is shown as the 3rd position code of the SMR code.

i. **Repair. The** application of maintenance services, including fault location/troubleshooting, removal/installation, and disassembly/assembly procedures, and maintenance actions to identify troubles and restore serviceability to an item by correcting specific damage, fault, malfunction, or failure in a part, subassembly, module (component or assembly), end item, or system.

j. Overhaul. That maintenance effort (service/action) prescribed to restore an item to a completely serviceable/operational condition as required by maintenance standards in appropriate technical publications (i.e., DMWR). Overhaul is normally the highest degree of maintenance performed by the Army. Overhaul does not normally return an item to like new condition.

k. **Rebuild.** Consists of those services/actions necessary for the restoration of unserviceable equipment to like new condition in accordance with original manufacturing standards. Rebuild is the highest degree of materiel maintenance applied to Army equipment. The rebuild operation includes the act of returning to zero those age measurements (hours/miles, etc.) considered in classifying Army equipment/components.

B-3. EXPLANATION OF COLUMNS IN THE MAC, SECTION II

a. **Column 1, Group Number.** Column 1 lists functional group code numbers, the purpose of which is to identify maintenance significant components, assemblies, subassemblies, and modules with the next higher assembly. End item group number shall be "00".

b. **Column 2, Component/Assembly.** Column 2 contains the names of components, assemblies, subassemblies, and modules for which maintenance is authorized.

c. Column 3, Maintenance Function. Column 3 lists the functions to be performed on the item listed in column 2. (For detailed explanation of these functions, see paragraph B-2).

d. **Column 4, Maintenance Category.** Column 4 specifies, by the listing of a work time figure in the appropriate subcolumn(s), the category of maintenance authorized to perform the function listed in column 3. This figure represents the active time required to perform that maintenance function at the indicated category of maintenance. If the number or complexity of the tasks within the listed maintenance function vary at different maintenance categories, appropriate work time figures will be shown for each category. The work time figure represents the average time required to restore an item (assembly, subassembly, component, module, end item or system) to a serviceable condition under typical field operating conditions. This time includes preparation time (including any necessary disassembly/assembly time), fault location/troubleshooting, time and quality assurance/quality control time in addition to the time required to perform the specific tasks identified for the maintenance functions authorized in the maintenance allocation chart. The symbol designations for the various maintenance categories are as follows:

C ..... Operator or Crew
O ..... Unit Maintenance
F ..... Direct Support Maintenance
H ..... General Support Maintenance
D ..... Depot Maintenance

B-3. EXPLANATION OF COLUMNS IN THE MAC, SECTION II - CONT.

e. Column 5, Tools and Equipment. Column 5 specifies, by code, those common tool sets (not individual tools) and special tools, TMDE, and support equipment required to perform the designated function.

f. **Column 6, Remarks** This column shall, when applicable, contain a letter code, in alphabetical order, which shall be keyed to the remarks contained in section IV.

B-4. EXPLANATION OF SPECIAL IDENTIFIERS USED IN SECTION II

Maintenance functions identified by an asterisk (*) will have tools identified in the appropriate DMWR.

B-5. EXPLANATION OF COLUMNS IN TOOL AND TEST EQUIPMENT REQUIREMENTS, SECTION III

a. Column 1, Reference Code. The tool and test equipment reference code correlates with a code used in the MAC, section II, column 5.

b. Column 2, Maintenance Category. The lowest category of maintenance authorized to use the tool or test equipment.

c. Column 3, Nomenclature. Name or identification of the tool or test equipment.

d. Column 4, National Stock Number. The National Stock Number of the tool or test equipment.

e. Column 5, Tool Number. The manufacturer's part number.

B-6. EXPLANATION OF COLUMNS IN SECTION IV

a. Reference Code. This column consists of a letter code in alphabetic order which is keyed to column 6 of Section II.

b. Remarks. This column lists information pertinent to the maintenance function being performed, as indicated on the MAC, Section II.

Section II. MAINTENANCE ALLOCATION CHART

FOR

ARMORED VEHICLE LAUNCHED BRIDGE

(1) GROUP NUMBER	(2) COMPONENT/ ASSEMBLY	(3) MAINTENANCE FUNCTION	(4) Maintenance CATEGORY C	O	F	H	D	(5) TOOLS AND EQPT.	(6) REMARKS
01	HYDRAULIC SYSTEM								
0101	Cylinders, Hydraulic Cylinder, Scissors	Inspect Replace Repair Overhaul	0.1	2.0	8.0		*	1 2	
0102	Hoses, Pipes, Fittings	Inspect Replace Repair	0.1	0.5 0.5					
	Fittings; Valves, Coupling Quick-Disconnect and Bracket	Inspect Replace	0.1	0.5 0.5					
02	FRAME								
0201	Bridging Equipment Bracing; Cross Beams; etc.	Inspect Replace	0.1	1.0					
	Diaphragm	Inspect Replace	0.1	4.0					
	Cables	Inspect Replace	0.1	1.0					
	Panel Assemblies, Center and End	Inspect Replace Repair Overhaul	0.1	3.0	6.0		*		A
	Pins, Center Hinge	Inspect Service Replace	0.1	0.1 1.0					
	Pins, Quadrant Hinge	Inspect Service Replace	0.1	0.1 4.0					
	Pins, Lock; Bolts	Inspect Replace	0.1	0.5					
	Quadrant Assembly	Inspect Replace	0.1	2.0					

Section II. MAINTENANCE ALLOCATION CHART - CONT

(1) GROUP NUMBER	(2) COMMPONENT/ ASSEMBLY	(3) MAINTENANCE FUNCTION	MAINTENANCE CATEGORY C	O	F	H	D	(5) TOOLS AND EQPT.	(6) REMARKS
	Tie Rod Assembly	Inspect Replace	0.1	1.0				3	

Section III. TOOL AND TEST EQUIPMENT REQUIREMENTS

(1) Reference Table	(2) Maintenance Level	(3) Nomenclature	(4) National/NATO Stock Number	(5) Tool Number
1	O	Wrench, Cylinder Rod	5420-00-542-3113	
2	F	Wrench, Spanner	5120-00-303-5160	
3	O	Wrench, Adjustable (2 ea)	5120-00-240-1414	
4	O	Installation Tool, Seal Pack		

Section IV. REMARKS

Refererence Code	Remarks
A	Repair by Welding. Welding is only authorized to repair or replace the tie rod housings and tie rods.

APPENDIX C

COMPONENTS OF END ITEM AND BASIC ISSUE ITEMS LISTS

SECTION I. INTRODUCTION

C-1. SCOPE

This appendix lists components of end item (COEI) and basic issue items (BII) for the Armored Vehicle-Launched Bridge (AVLB) to help you inventory items required for safe and efficient operation.

C-2. GENERAL

The Components of End Items for the MLC 60 and MLC 70 with Basic Issue Items Lists are divided into the following sections.

a. Section II. Components of End Item. This listing is for informational purposes only, and is not authority to requisition replacements. These items are part of the end item, AVLB, but are removed and separately package for transportation or shipment. As part of the end item, these items must be with the end item whenever it is issued or transferred between property accounts. Illustrations are furnished to assist you in identifying the items.

b. Section III. Basic Issue Items List. The minimum essential items required to place the bridge in operation, to operate it, and to perform emergency repairs. Although shipped separately packaged, BII must be with the AVLB during operation and whenever it is transferred between property accounts. The illustrations will assist you with hard-to-identify items. This manual is your authority to request/ requisition replacement BII, based on TOE/MTOE authorization of the end item. This section will list and illustrate the minimum essential items required to support the bridge at user level in accordance with MIL-M-63036B(TM).

C-3. EXPLANATION OF COLUMNS

The following provides an explanation of columns found in the tabular listings:

a. Column (1) - Item Number. Indicates the table number of the item shown.

b. Column (2) - National Stock Number (NSN). This column indicates the National stock number assigned to the item and will be used for requisitioning purposes.

c. Column (3) - Description. This column indicates the Federal item name and, if required, a minimum description to identify and locate the item.

d. Column (4) - Unit of Measure (U/M). This column indicates the measure used in performing the actual operational/maintenance function.

e. Column (5) - Quantity (Qty). This column indicates the items authorized to be used with/on the equipment.

SECTION II. COMPONENTS OF END ITEM (MLC 60)

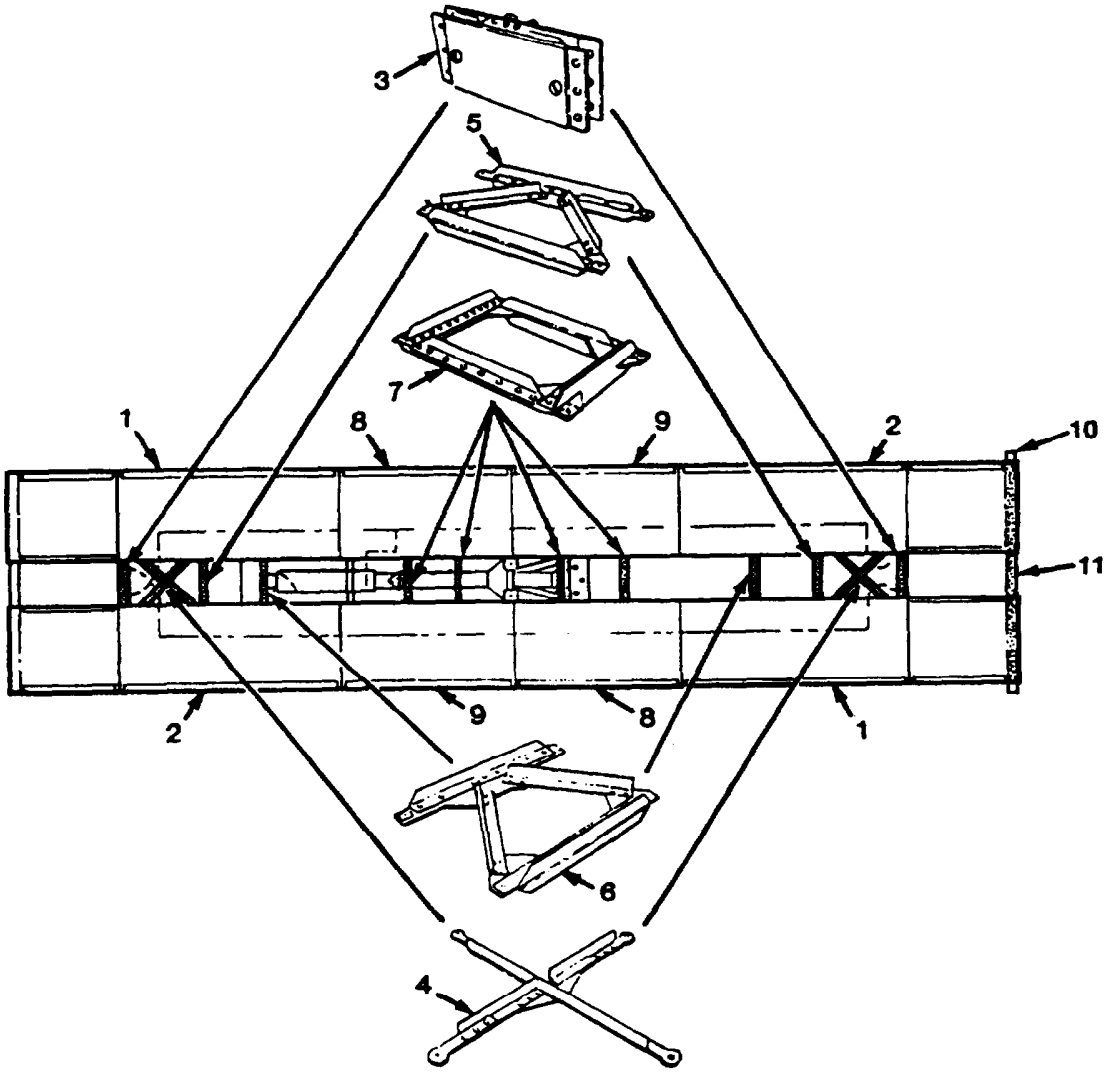

SECTION II. COMPONENTS OF END ITEM (MLC 60) - CONT

(1) IlluS Number	(2) National Stock Number	(3) Description CAGE and Part Number	(4) U/M	(5) Qty Rqr
1	2510-00-542-3118	Section, Ramp (Female) (81336) D7884-19	EA	2
2	5420-00-542-3117	Section, Ramp (Male) (97403) 13211E7837	EA	2
3	5420-00-542-3149	Diaphragm, Launching (97403) 13211E7850	EA	2
4	5420-00-542-3122	Brace, Lateral (97403) 13211E7886	EA	2
5	5420-00-542-3125	Brace, Transverse (Ramp Section) (97403) 13211E7887	EA	2
6	5420-00-542-3124	Brace, Transverse (Ramp Section) (97403) 13211E7888	EA	2
7	5420-00-542-3123	Brace, Transverse (Center Section) (97403) 13211E7897	EA	4
8	5420-00-542-3115	Section, Center (Female) (97403) 13211E7825	EA	2
9	5420-00-542-3116	Section, Center (Male) (97403) 1321lE7813	EA	2
10	5306-01-136-1186	Rod, Threaded (Tie) (97403) 13211E7922	EA	2
11	5365-01-01l-5038	Spacer, Tie Rod (97403) 13211E7923	EA	2

SECTION II. COMPONENTS OF END ITEM (MLC 60) - CONT

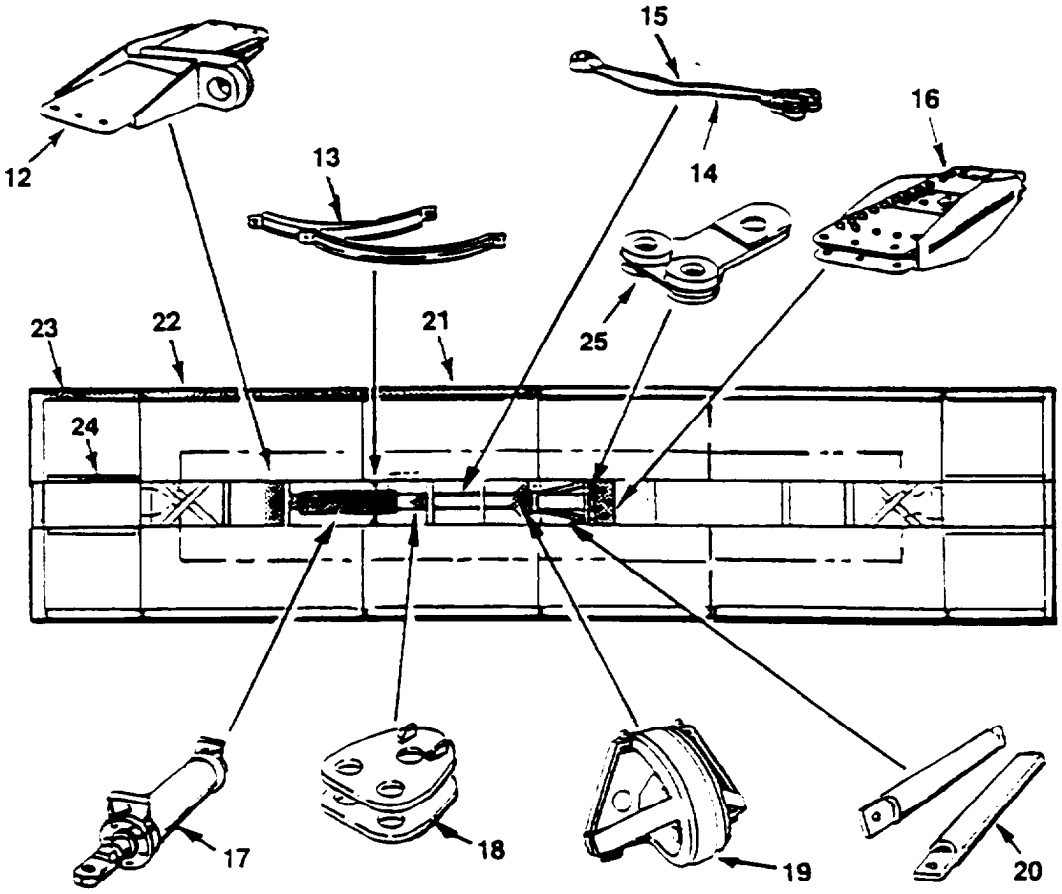

SECTION II. COMPONENTS OF END ITEM (MLC 60) - CONT

(1) Illus Number	(2) National Stock Number	(3) Description CAGE and Part Number	(4) U/M	(5) QtY Rqr
12	5420-00-542-3148	Beam, Cylinder (97403) 13211E7884	EA	1
13	5420-00-542-3151	Support, Cylinder (97403) 13211E7851	EA	2
14	5420-00-542-3140	Cable, Scissoring (Left Lay) (97403) 1321lE7903	EA	1
15	5420-00-542-3141	Cable, Scissoring (Right Lay) (97403) 13211E7893	EA	1
16	5420-00-542-3146	Beam, Cable (97403) 13211E7885	EA	1
17	5420-00-542-3155	Cylinder, Actuating (Scissoring) (81336) D7884-60-1	EA	1
18	5420-00-542-3138	Plate, Equalizer (Cylinder End) (97403) 13211E7883	EA	1
19	5420-00-542-3132	Quadrant Assembly (97403) 13211E7857	EA	1
20	5420-00-542-3139	Strut, Quadrant (97403) 13211E7882	EA	2
21	5306-01-136-3130	Curb, Deck (Center Section) (97403) 13211E7858	EA	4
22	5365-01-011-3128	Curb, End Section, (97403) 13211E7836	EA	4
23	5420-00-542-3129	Curb, Ramp (97403) 13211E7856	EA	4
24	5420-00-542-3127	Curb, Ramp (inside) (97403) 13211E7899	EA	4
25	5420-00-542-3147	Plate, Equalizer (97403) 1321lE7881	EA	1

SECTION II. COMPONENTS OF END ITEM (MLC 70) - CONT

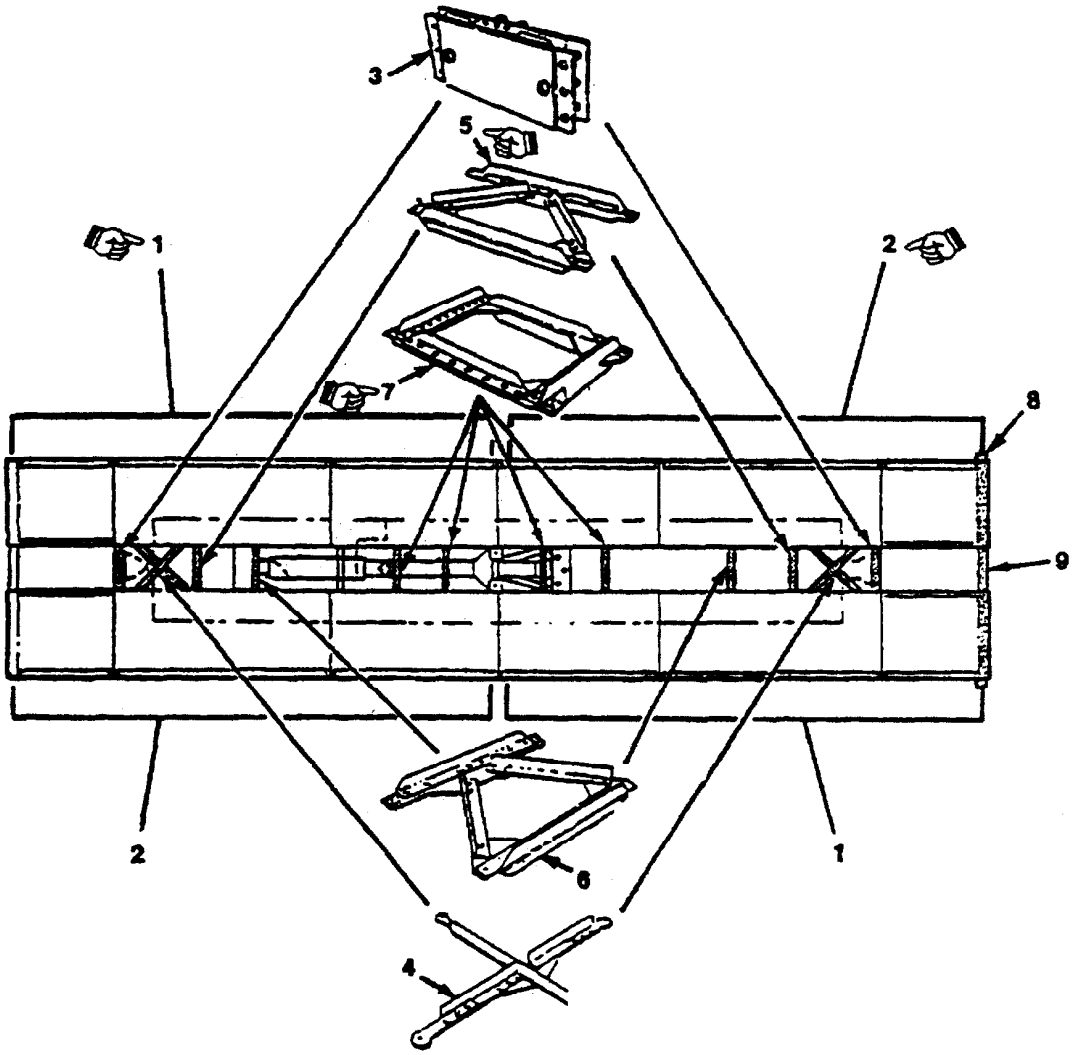

SECTION II. COMPONENTS OF END ITEM (MLC 70) - CONT

(1) Illus Number	(2) National Stock Number	(3) Description CAGE and Part Number	(4) U/M	(5) Qty Rqr
1	5420-01-419-9478	Section, (Female) (97403) 13230E4808	EA	2
2	5420-01-420-1684	Section, (Male) (97403) 13230E4809	EA	2
3	5420-00-542-3149	Diaphragm, Launching (97403)13211E7850	EA	2
4	5420-00-542-3122	Brace, Lateral (97403) 13211E7886	EA	2
5	5420-00-542-3125	Brace, Rear Transverse (97403) 1321lE7887	EA	2
6	5420-01-542-1685	Brace, Rear Transverse (97403)13230E4899	EA	2
7	5420-01-419-9481	Brace, Forward Transverse (97403) 13230E6447	EA	4
8	5306-01-136-1186	Rod, Threaded (Tie) (97403)13211E7922	EA	2
9	5365-01-011-5038	Spacer, Tie Rod (97403)13211E7923	EA	2
10	5420-00-542-3148	Beam, Cylinder (97403)13211E7884	EA	1

SECTION II. COMPONENTS OF END ITEM (MLC 70) - CONT

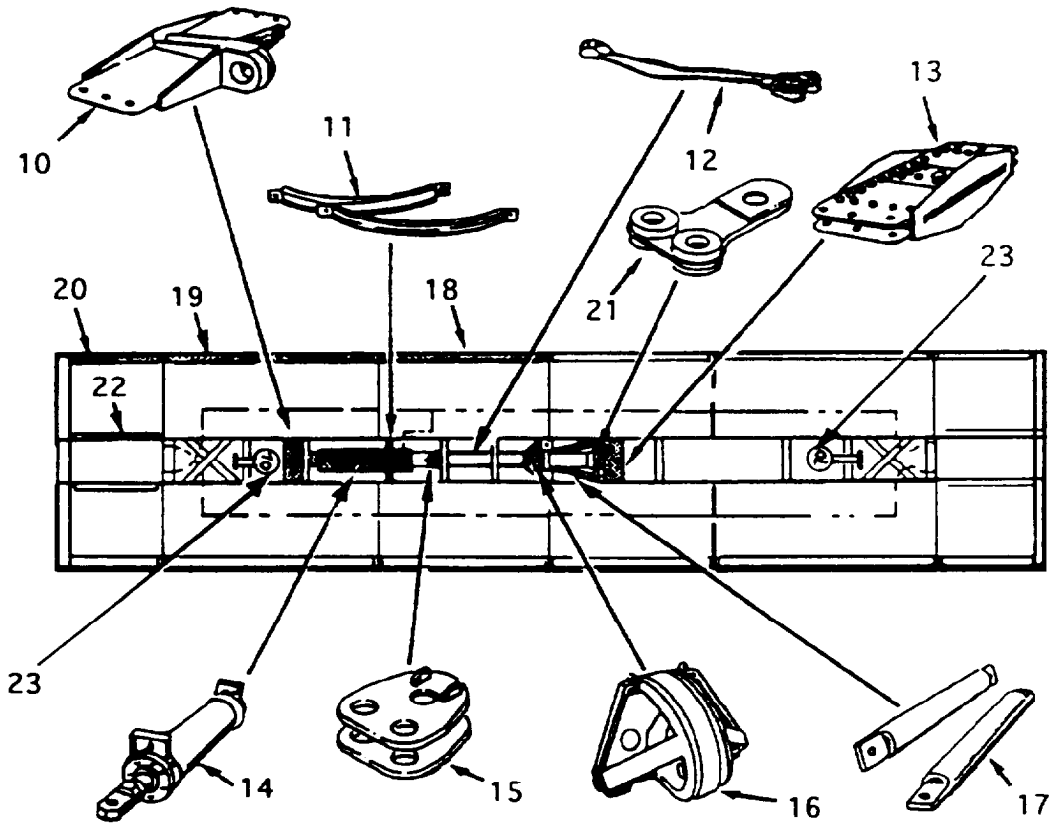

SECTION II. COMPONENTS OF END ITEM (MLC 70) - CONT

(1) Illus Number	(2) National Stock Number	(3) Description CAGE and Part Number	(4) U/M	(5) Qty Rqr
11	5420-00-542-3 15 1	Support, Cylinder (97403) 13211E7851	EA	2
12	5420-00-542-3140	Cable, Scissoring (Left Lay) (97403) 13211E7903	EA	1
12	5420-00-542-3 141	Cable, Scissoring (Right Lay) (97403) 13211E7893	EA	1
13	5420-00-542-3146	Beam, Cable (97403) 13211E7885	EA	1
14	5420-00-542-3155	Cylinder, Actuating (Scissoring) (81336) D7884-60-1	EA	1
15	5420-00-542-3138	Plate, Equalizer (Cylinder End) (97403) 13211E7883	EA	1
16	2590-01-431-4438	Quadrant Assembly (97403) 12463645	EA	1
17	5420-00-542-3139	Strut, Quadrant (97403) 13211E7882	EA	2
18	5420-00-542-3130	Curb, Deck (97403) 13211E7858	EA	4
19	5420-00-542-3128	Curb, End Section, (97403) 13211E7836	EA	4
20	5420-00-542-3129	Curb,Ramp (97403) 13211E7856	EA	4
21	5420-00-542-3147	Plate, Equalizer (97403) 13211E7881	EA	1
22	5420-00-542-3127	Curb, Ramp (inside) (97403) 132117899	EA	4
23	5340-01-426-3913	Sign, Weight Limit	EA	2

SECTION III. BASIC ISSUE ITEMS LISTS

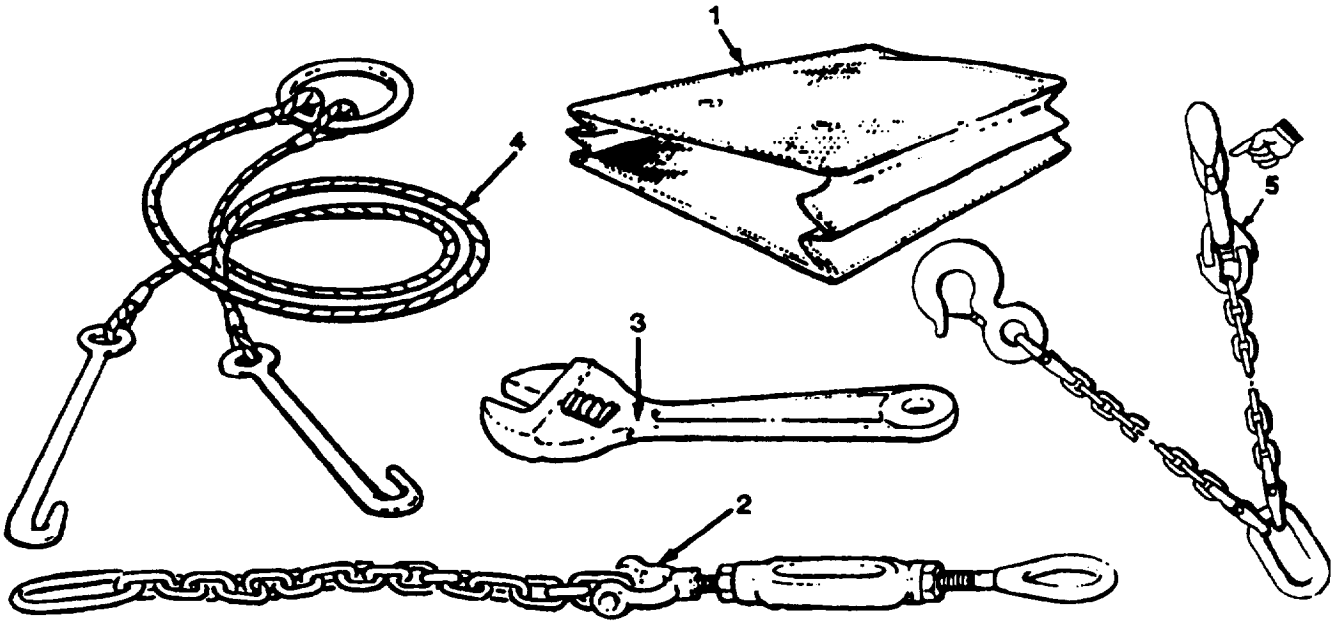

(1) Illus Number	(2) National Stock Number	(3) Description CAGEC and Part Number	(4) U/M	(5) Qty Rqr
1	7520-00-559-9618	Case, Manuals (273 15) 27U163	EA	1
2	5420-00-542-3154	Chain, Holddown (97403) 13211E7879	EA	2
3	5120-00-264-3793	Wrench, Adjustable (82348) GGG-W-631	EA	1
4	3940-01-110-4432	Sling, Multiple Leg (97403) 13212E7099	EA	2
5	3940-01-436-4543	Sling, Multiple Leg (19207) 12463568	BGD	4

APPENDIX D

EXPENDABLE/DURABLE SUPPLIES AND MATERIALS LIST

Section I. INTRODUCTION

D-1. SCOPE. This appendix lists expendable/durable supplies and materials you will need to operate and maintain the bridge. This listing is for informational purposes only and is not authority to requisition the listed items. These items are authorized to you by CTA 50-970, Expendable/Durable Items Except Medical, Class V, Repair Parts, and Heraldic Items).

D-2. EXPLANATION OF COLUMNS

Column (1) - Item Number. This number is assigned to the entry in the listing and is referenced in the narrative instructions to identify the material (e.g.,''Use cleaning compound, item 5, Appendix D").

b. Column (2) - Level. This column identifies the lowest level of maintenance that requires the listed item.

C - Operator/Crew
0- Unit Maintenance
F - Direct Support Maintenance

c. Column (3) - Nationanl Stock Number. This is the National Stock Number assigned to the item; use it to request or requisition the item

d. Column (4) - Description, on. Indicates the Federal item name and, if required, a description to identify the item. The last line for each item indicates the Commercial and Government Entity Code (CAGE) in parentheses followed by the part number.

e. Column (5) - Unit of Measure (U/M). Indicates the measure used in performing the actual maintenance function. This measure is expressed by a two-character alphabetical abbreviation (e.g., ea, in., pr). If the unit of measure differs from the unit of issue, requisition the lowest unit of issue that will satisfy your requirements.

Section II. EXPENDABLE SUPPLIES AND MATERIALS LIST

(1) ITEM NUMBER	(2) LEVEL	3 NATIONAL STOCK NUMBER	(4) DESCRIPTION	(5) U/M
1	C	9150-00-190-0904	Grease, Automotive and Artillery, (81349) MIL-G-10924	G L
2	C	7920-00-205-1711	Rag, Wiping, 50 lb Bale (58536), A-A-531	L B
3	C	8030-00-339-0310	Loctite, Pneumatie/Hyd Seal "569", (56931)	B L

APPENDIX E

REPLACEMENT PARTS LIST

SECTION I. INTRODUCTION

E-1. SCOPE

This appendix is a cross-reference of item numbers to part numbers and is included for that purpose only. **E-**

2. EXPLANATION OF COLUMNS

a. Column (1) - Item Number. This number is assigned to the entry in the listing for cross--referencing to the part number.

b. Column (2) - Description. This column identified parts which appear on the first page of the task under the subheading "SUPPLIES."

c. Column (3) - Part Number. Indicates the primary number used by the manufacturer (individual, company, firm, corporation, or Government activity), which controls the design and characteristics of the item by means of its engineering drawings, specification, standards, and inspection requirements to identify an item or range of items.

NOTE: When you use National Stock Number (NSN) to requisition a part, the part you get may have a different part number from the part ordered but go ahead and use or furnish it as the supply part.

SECTION II. REPLACEMENT PARTS LIST

(1) Item No.	(2) Description	(3) Part Number
1	Washer, Lock	AN9601216
2	Washer, Lock	MS35338-44
3	Washer, Lock	MS35338-46
4	Washer, Lock	MS35338-48
5	Washer, Lock	MS35338-51
6	Washer, Lock	MS35338-53
7	Packing, Preformed	MS28775-441
8	Ring, Wiper	13211E3144-4
9	Ring, Wiper	MS28776M2-41
10	Pin, Cotter	MS24665-31
11	Kit, Overhaul, Scissoring Cylinder	13228E1971

INDEX

Subiect	Paragraph Table (T)
A	
Accelerator Locking Lever	T2-1
Accelerator Petal	T2-1
Adjustments, Checks, and Alignments..	3-9
Administrative Storage..	5-1
Bridge in Stand-by Mode Mounted on a Launcher	5-1a
Bridge in Stand-by Mode Without Launcher..	5-1b
Shipment..	5-2
Army Maintenance Maintenance Systems (TAMMS).	1-2
Assembly and Preparation for Use of MLC60	2-3
Assembly and Preparation for Use of MLC70	2-5
Assembly of the Bridge Separated At Center Hinges	2-3d
Assembly of the Bridge Separated into Eight Sections..	2-3c
AVLB Equipment Data..	1-8a
AVLB Hydraulic System..	1-7a
AVLB Movement by Flatbed Trailer..	2-10c
AVLB Major Components..	1-7c
AVLB Movement by Launcher Vehicle..	2-10a
AVLB Structural System..	1-7b
B	
Basic Issue Items List (BII)	C-1
Bolts and Pins	T1-2
Brake Petal..	T2-1
Bridge in Standby Mode Mounted on a Launcher	5-1a
Bridge in Standby Mode Without Launcher..	5-1b
Bridge Section Replacement (Male and Female).	3-13
C	
Cable Beam, Installation of..	2-3c(20)
Cable Beam, Installation of..	2-5c(15)
Cable Beam Replacement..	3-12
Cable Beam Replacement..	3-13
Cable Retainer, Installation of..	2-3c(29)
Cable Retainer, Installation of..	2-5c(25)
Capabilities, Equipment..	1-6
Care and Handling..	1-9
Center Section (Far-Shore) Replacement	3-12
Center Section (Near-Shore) Replacement..	3- 12
Center Section Deck Extrusion Replacement..	3-12
Center Section Hard Hydraulic Piping Replacement	3-12

INDEX - CONT

Subject	Paragraph Table (T)
C - CONT	
Center Section Miscellaneous Components Replacement	3- 12
Checks, Adjustments, and Alignments..	3-9
Characteristics, Equipment	1-6
Classifications and Definitions of Leaks for Operator/Crew PMCS	2-2c
Classifications and Definitions of Stage I, II, III, and IV Corrosion	2-2d
Common Tools and Equipment..	3-2
Components of End Item (COEI) and Basic Issue Items List (BII)	C-1
Connecting Hardware, Major Components	T1-2
Controls and Indicators..	2-1
Corrosion, Classification and Definitions of Stage I, II, III, and IV	2-2d
Cross-Country Travel	l-6b
Curb (Deck) Replacement	3-12
Curb (End Panel) Replacement..	3-12
Curb (Inside) Replacement	3-12
Curb (Ramp) Replacement	3-12
Curb Replacement (Male and Female)	3-13
Cylinder Beam Replacement..	3-12
Cylinder Beam Replacement..	3- 13
D	
Checks 2-4	
Data, Equipment..	1-8
Deck Curb Replacement	3-12
Deck Extrusions (Center Section) Replacement..	3- 12
Deck Extrusions (Ramp Section) Replacement	3-12
Deck Extrusions Replacement (Male and Female)	3-13
Definitions and Classifications of Leaks for Operator/Crew PMCS	2-2 c
Definitions and Classifications of Stage I, II, III, and IV Corrosion	2-2 d
Description of Major Components	l-7
Description of Operation	1-10
Destruction Notice	Page i
Destruction of Material to Prevent Enemy Use	1-4
Diaphragm (Far-Shore), Installation of	2-3c(17)
Diaphragm (Far-Shore), Installation of	2-5c(10)
Diaphragm (Near-Shore), Installation of..	2-3c(2)
Diaphragm (Near-Shore), Installation of..	2-5c(1)
Diaphragm (Far-Shore), Replacement	3-12
Diaphragm (Far-Shore), Replacement..	3-13
Diaphragm (Near-Shore), Replacement	3-12

INDEX - CONT

Subject	Paragraph Table (T)
D - CONT	
Diaphragm (Near-Shore), Replacement	3-13
Dimensions and Weight	1-8a
Direct Support and General Support Maintenance	5-1
Distribution Statement	Page i
E	
Ejection Cylinder Lever	T2-1
End Panel Curb Replacement	3-12
Engine Gauges	T2-1
Equalizer Plate, Scissoring Cables, and Attaching Hardware, Installation	2-3c(28)
Equalizer Plate, Scissoring Cables, and Attaching Hardware, Installation	2-5c(26)
Equipment Description and Data	1-8
Equipment Improvement Recommendations (EIR)	1-3
Equipment Inspection and Maintenance Worksheet	A-2
Equipment	
Characteristics	1-6
Capabilities	1-6
Data	1-8
Features	1-6
Expendable/Durable Supplies and Material List	D-1
F	
Far-Shore Center Section Replacement	3-12
Far-Shore Center Section Transverse Brace Replacement	3-12
Far-Shore Diaphragm Replacement	3-12
Far-Shore Diaphragm Replacement	3-12
Far-Shore Ramp Section Replacement	3-13
Far-Shore Ramp Section Transverse Brace Replacement	3-12
Features, Equipment	1-6
Flexible Hydraulic Lines Replacement	3-12
Flexible Hydraulic Lines Replacement (Diaphragm & Hydraulic Cylinder)	3-13
Fording Depth	1-6b
Forms and Records	1-2
Forward Transverse Braces Replacement (Near-Shore)	3-13
Forward Transverse Braces Replacement (Far-Shore)	3-13

INDEX - CONT

Subject	Paragraph Table (T)
G	
Grade-Ascending Ability	1-6b
Ground Clearance of Vehicle	1-6b
Gauges	
Engine	T2-1
RPM	T2-1
H	
Hard Hydraulic Piping Replacement (Male and Female)	3-13
How To Use This Manual	Page iii
Hydraulic Clutch Pump Lever	T2-1
Hydraulic Cylinder Replacement	3-12
Hydraulic Cylinder Replacement	3-13
Hydraulic Cylinder Component Replacement	3-12
Hydraulic Cylinder Component Replacement	3-13
Hydraulic Cylinder Lines and Fittings Replacement	3- 12
Hydraulic Cylinder Lines and Fittings Replacement	3-13
Hydraulic Quick-Release Connector, Installation of	2-3c(26)
Hydraulic System	1-7a
I	
Indicators and Controls	2- 1
Initial Adjustments, Daily Checks, and Self-Test	2-7
Inside Curb Replacement	3-12
Inspection, Maintenance Procedures	3-8
Installation of	
Cable Beam	2-3c(20)
Cable Beam	2-5c(15)
Cable Retainer	2-3c(29)
Cable Retainer	2-5c(25)
Center Sections (Far-Shore)	2-3c(11)
Cylinder Beam	.2-3c(3)
Cylinder Beam	2-5c(6)
Diaphragm (Far-Shore)	2-3c(17)
Diaphragm (Far-Shore)	2-5c(10)
Diaphragm (Near-Shore)	2-3c(2)
Diaphragm (Near-Shore)	2-5c(2)
Equalizer Plate	2-3c(28)
Equalizer Plate	2-5c(26)
Flexible Hydraulic Hose	2-3c(6)

INDEX - CONT

Subject	Paragraph Table (T)
H - CONT	
Holder Bracket (Near-Shore and Far-Shore)	2-3c(1)
Holder Bracket (Near-Shore and Far-Shore)	2-5c(1)
Hydraulic Hoses (Far-Shore)	2-3c(18)
Hydraulic Lines (Near-Shore and Far-Shore).	2-5c(17)
Hydraulic Quick-Release Connector..	2-3c(26)
Lateral Brace (Far-Shore)	2-3c(17)
Lateral Brace (Far-Shore)	2-5c(12)
Lateral Brace (Near-Shore).	2-3c(4)
Lateral Brace (Near-Shore).	2-5c(4)
Locking Pins..	2-3c(13)
Locking Pins..	2-5c(18)
Pinning Ramp and Center Sections (Far-Shore).	2-3c(19)
Pinning Ramp and Center Sections (Near-Shore)	2-3c(7)
Pinning Male and Female Sections	2-5c(18)
Positioning of Ramp Sections (Far-Shore).	2-3c(15)
Quadrant	2-3c(21)
Quadrant	2-5c(19)
Quadrant Hinge Pins	2-3c(13)
Quadrant Hinge Pins	2-5c(18)
Quadrant Struts	2-3c(22)
Quadrants Struts	2-5c(20)
Scissoring Cables..	2-3c(28)
Scissoring Cables..	2-5c(24)
Scissoring Cylinder	2-3c(9)
Scissoring Cylinder	2-5c(8)
Scissor Cylinder Flexible Hydraulic Hose..	2-3c(25)
Scissor Cylinder Flexible Hydraulic Hose..	2-5c(23)
Scissor Cylinder Manual Hydraulic Bleed Valves	2-3c(27)
Scissor Cylinder Supports..	2-3c(8)
Scissor Cylinder Supports	2-5c(7)
Tie Rods	2-3c(31)
Tie Rods..	2-5c(27)
Transverse Braces (Far-Shore Center Section).	2-3c(14)
Transverse Braces (Far-Shore Ramp Section)	2-3c(17)
Transverse Braces (Far-Shore)	2-5c(11)(13)(14)(16)
Transverse Braces (Near-Shore Center Section)	2-3c(10)
Transverse Braces (Near-Shore Ramp Section).	2-3c(5)
Transverse Braces (Near-Shore).	2-5c(3)(5)(8)(9)
Instructions for Using the Sling..	2-3a
Instructions for Using the Sling..	2 5 a
Intervals, PMCS..	2-2b

INDEX - CONT

Subject	Paragraph Table (T)
L	
Lateral Brace Replacement (Near-Shore and Far-Shore)	3-13
Launching	2-8a
Launch, Retrieval, and Recovery Operations	2-9
Launching on a Slope	2-9a
Retrieving on a Slope	2-9c
Launching in Wetlands or Marshy Areas	2-9c
Retrieving from Wetlands or Marshy Areas	2-9d
Recovery/Retrieval of an Impacted Bridge	2-9e
Recovery by Other than a Launcher	2-9f
Launching Sequence	2-10b
Leaks, Classification and Definition for PMCS	2-2c
Levers	
Accelerator Locking	T2-1
Ejection Cylinder	T2- 1
Hydraulic Clutch Pump	T2 - 1
Locking Cylinder	T2- 1
Overhead Cylinder	T2- 1
Scissor Cylinder	T2-1
Tongue Cylinder	T2- 1
Transmission Shift	T2-t
Load and Use Limitations	1-8b
Loading and Unloading Operations	2-10
Loading/Unloading a Bridge To/From a Launcher	2-10a
Loading/Unloading a Scissored Bridge to/from a Lowbed or Flatbed Semitrailer using forklifts	2-10e
Loading/Unloading a Scissored Bridge to/from a Lowbed or Flatbed Semitrailer using a crane (20 ton capacity or higher)	2- 10f
Loading/Unloading of the Scissored Bridge to/from a Flatbed Semitrailer (MB71 or M872)	2- 10c
Loading/Unloading Scissored Bridge to/from a Lowbed Semitrailer	2-10b
Loading/Unloading the Scissored Bridge to/from a Lowbed Semitrailer using a Second Launched Bridge as a Ramp	2-10d
Location and Description Of Major Components	l-7
Locking Cylinder	T2-1
Locking Pins, Installation of	2-3c
Locking Pins, Installation of	2-5c
Lubrication Chart	3-1
Lubrication Instructions	3-1
Lubrication Methods	3-1

INDEX - CONT

Subject	Paragraph Table (T)
M	
Maintenance Allocation Chart	B-1
Maintenance Forms and Records..	1-2
Maintenance Instructions for MLC60, Operator/Unit	3-12
Maintenance Instructions for.MLC70, Operator/Unit	3-13
Maintenance Instructions, Direct and General Support..	4-5
Major Components	1-7c, T1-1
Maximum Vehicle Crossing Speeds and Weight Limits..	1-8
Military Load Classification (MLC)	1-Bc, A-3
Miscellaneous Component Replacement (Male and Female)	3-13
Movement of AVLB by Flatbed Trailer..	2- 11b
Movement of AVLB by Launcher Vehicle..	2- 11a
N	
Near-Shore Center Section Replacement	3- 12
Near-Shore Center Section Transverse Brace Replacement	3- 12
Near-Shore Diaphragm Replacement..	3-12
Near-Shore Diaphragm Replacement..	3- 13
Near-Shore Lateral Brace Replacement	3- 12
Near-Shore Lateral Brace Replacement	3- 13
Near-Shore Ramp Section Replacement..	3- 12
Near-Shore Ramp Section Transverse Brace Replacement..	3- 12
0	
Operating Instructions	2- 1
Operating Procedures	2-8
Launching..	2-8a
Retrieval By Launcher	2-8b
Operation Under Usual Conditions	2-3
Operation Under Unusual Conditions..	2-9
Overhead Clearance Required..	1-6b
Overhead Cylinder Lever	T2-1
P	
Parts List, Replacement..	E-1
PMCS Walk-Around Inspection Pattern..	2-3a
Preparation for Assembly	2-3b
Preparation for Assembly	2-5b

INDEX - CONT

Subject	Paragraph Table (T)
P - CONT	
Preparation for Movement	2-10
Movement of AVLB by Launcher Vehicle	2-10a
Movement of AVLB by Flatbed Trailer	2-10b
Preparation For Storage Or Shipment	1-5
Preparation Maintenance Checks and Services (PMCS)	2-2
Preventative Maintenance Checks and Services (PMCS) Table	T2-2
Principles of Operation	1-10
Q	
Quadrant, Installation	2-3c(21)
Quadrant, Installation	2-5c(19)
Quadrant Hinge Pins, Installation	2-3c(13)
Quadrant Hinge Pins, Installation	2-5c(18)
Quadrant Replacement	3-12
Quadrant Replacement	3-13
Quadrant Struts, Installation	2-3c(22)
Quadrant Struts, Installation	2-5c(20)
R	
Ramp Curb Replacement	3-12
Ramp Section Replacement (Far-Shore)	3-12
Ramp Section Replacement (Near-Shore)	3-12
Ramp Section Deck Extrusion Replacement	3-12
Ramp Section Lateral Brace Replacement (Near and Far-Shore)	3-12
Ramp Section Miscellaneous Components Replacement	3-12
Ramp Section Hard Hydraulic Piping Replacement	3- 12
Ramp Section Transverse Brace Replacement (Far-Shore)	3- 12
Ramp Section Transverse Brace Replacement (Near-Shore)	3- 12
Rear Transverse Braces Replacement (Near-Shore)	3- 13
Rear Transverse Braces Replacement (Far-Shore)	3- 13
Recommended Changes to DA Publication	A-2
Recommended Changes to Equipment Technical Publication	A-2
Recovery by Other Than a Launcher	2-9f
Recovery/Retrieval of Impacted Bridge	2-9e
Recovery Using a Towing Vehicle	2-9f
Recovery With a Crane	2-9f
References	A - 1
Removal and Replacement Procedures	3- 12
Removal and Replacement Procedures	3- 13
Repair of Rivets by Bolt Substitution	3- 10

INDEX - CONT

Subject	Paragraph Table (T)
R - CONT	
Repair Parts	3-4
Replacement Parts List	E-1
Replacement Procedures	3-12
Replacement of Rivets and Bolt Substitution and Repair	3- 10
Reporting Equipment Improvement Recommendations (EIR)	1-3
Retrieval by Launcher.	2-8b
Retrieval/Recovery of Impacted Bridge	2-9e
Retrieving from Wetlands or Marshy Areas	2-9c
Retrieving On a Slope	2-9b
Rivet and Bolt Substitution and Repair	3-10
Rivet Replacement with Bolts	3-10b
Rivet Replacement Bolts, Nuts, and Washers for Temporary Replacement	T3-2
Risk Conditions	1-8b
S	
Safety, Care, and Handling	1-9
Safety in Use	1-8c
Scissoring Cables and Attaching Hardware Replacement..	3- 12
Scissoring Cables and Attaching Hardware Replacement..	3- 13
Self-Test..	2-7
Service Upon Receipt	Ch 3, Sec III
Shipment	5-2
Sling, Instructions for Using..	2-3a
Sling, Instructions for Using..	2-5a
Special Tools, TMDE, and Support Equipment	3-3
Standby Mode Mounted on a Launcher	5-1
Standby Mode Without Launcher	5-1
Structural System	1-7
Symptom Index, Troubleshooting	3-6
T	
Table, Troubleshooting	T3- 1
Tie Rod Replacement	3-12
Tie Rod Replacement	3-13
Tongue Cylinder	T2-1
Tools and Test Equipment Requirements	B-1

INDEX - CONT

Subject	Paragraph Table (T)
T-CONT	
Transporting and Positioning	2-8a
Transporting of the AVLB system (Class GO/Class 70 Bridges) for Air, Rail, Sea and Highway Mode of Transportation	2-10g
Transmission Shift Lever	T2-1
Treadways Width..	1-6b
Troubleshooting, Symptom Index	3-6
Troubleshooting Table	T3-1
Typical Clearance Turning Radius (Average)	1-6b
U	
Unloading a Bridge From a Launcher	2-10a
Unloading a Scissored Bridge from a Lowbed or Flatbed Semitrailer using a crane (20 ton capacity or higher)	2-10f
Unloading a Scissored Bridge from a Lowbed or Flatbed Semitrailer using forklifts	2-10e
Unloading of the Scissored Bridge from a Flatbed Semitrailer (MB71 or M872).	2-1Oc
Unloading Scissored Bridge from a Lowbed Semitrailer	2-10 b
Unloading the Scissored Bridge from a Lowbed Semitrailer using a Second Launched Bridge as a Ramp	2-10d
Unusual Conditions, Operation Under..	2-9
Use of Controls and Indicators..	T2-1
Usual Conditions, Operation Under	2-3
Usual Conditions, Operation Under	2-5
V	
Vehicle Crossing Speeds (Maximum)	1-6b
Vertical Obstacle Vehicle Climbing Ability	1-6b
W	
Warnings	Page a
Weight, Vehicle and Bridge..	1-6b
Welded Pipe Replacement	.3-11
Welding Procedures	.3-11
Width of Ditch Vehicle Will Cross..	1-6b

☆ U.S. GOVERNMENT PRINTING OFFICE: 1997 545-010/60537

By Order of the Secretary of the Army:

GORDON R. SULLIVAN
General, United States Army
Chief of Staff

Official:

PATRICIA P. HICKERSON
Brigadier General, United States Army
The Adjutant General

Distribution:
To be distributed in accordance with DA Form 12-37-E, Block 1232, Operator and Unit, Direct and General Maintenance Requirements for TM 5-5420-203-14.

*U.S. GOVERNMENT PRINTING OFFICE: 1991 — 5 4 3 - 0 2 5/ 4 0 1 2 9

RECOMMENDED CHANGES TO PUBLICATIONS AND BLANK FORMS For use of this form, see AR 25-30; the proponent agency is OAASA	Use Part II *(reverse)* for Repair Parts and Special Tool Lists (RPSTL) and Supply Catalogs/Supply Manuals (SC/SM).	DATE

TO: *(Forward to proponent of publication or form) (Include ZIP Code)*	**FROM:** *(Activity and location) (Include ZIP Code)*

PART I - ALL PUBLICATIONS (EXCEPT RPSTL AND SC/SM) AND BLANK FORMS

PUBLICATION/FORM NUMBER	DATE	TITLE

ITEM	PAGE	PARA-GRAPH	LINE	FIGURE NO.	TABLE	RECOMMENDED CHANGES AND REASON

* *Reference to line numbers within the paragraph or subparagraph.*

TYPED NAME, GRADE OR TITLE	TELEPHONE EXCHANGE/AUTOVON, PLUS EXTENSION	SIGNATURE

TO: *(Forward direct to addressee listed in publication)*	FROM: *(Activity and location) (Include ZIP Code)*	DATE

PART II - REPAIR PARTS AND SPECIAL TOOL LISTS AND SUPPLY CATALOGS/SUPPLY MANUALS

PUBLICATION NUMBER	DATE	TITLE

PAGE NO.	COLM NO.	LINE NO.	NATIONAL STOCK NUMBER	REFERENCE NO.	FIGURE NO.	ITEM NO.	TOTAL NO. OF MAJOR ITEMS SUPPORTED	RECOMMENDED ACTION

PART III - REMARKS *(Any general remarks or recommendations, or suggestions for improvement of publications and blank forms. Additional blank sheets may be used if more space is needed.)*

TYPED NAME, GRADE OR TITLE	TELEPHONE EXCHANGE/AUTOVON, PLUS EXTENSION	SIGNATURE

USAPA V3.01

RECOMMENDED CHANGES TO PUBLICATIONS AND BLANK FORMS For use of this form, see AR 25-30; the proponent agency is OAASA	Use Part II *(reverse)* for Repair Parts and Special Tool Lists (RPSTL) and Supply Catalogs/Supply Manuals (SC/SM).	DATE
TO: *(Forward to proponent of publication or form) (Include ZIP Code)*	**FROM:** *(Activity and location) (Include ZIP Code)*	

PART I - ALL PUBLICATIONS (EXCEPT RPSTL AND SC/SM) AND BLANK FORMS

PUBLICATION/FORM NUMBER	DATE	TITLE

ITEM	PAGE	PARA-GRAPH	LINE	FIGURE NO.	TABLE	RECOMMENDED CHANGES AND REASON

* *Reference to line numbers within the paragraph or subparagraph.*

TYPED NAME, GRADE OR TITLE	TELEPHONE EXCHANGE/AUTOVON, PLUS EXTENSION	SIGNATURE

TO: *(Forward direct to addressee listed in publication)*	FROM: *(Activity and location) (Include ZIP Code)*	DATE

PART II - REPAIR PARTS AND SPECIAL TOOL LISTS AND SUPPLY CATALOGS/SUPPLY MANUALS

PUBLICATION NUMBER	DATE	TITLE

PAGE NO.	COLM NO.	LINE NO.	NATIONAL STOCK NUMBER	REFERENCE NO.	FIGURE NO.	ITEM NO.	TOTAL NO. OF MAJOR ITEMS SUPPORTED	RECOMMENDED ACTION

PART III - REMARKS *(Any general remarks or recommendations, or suggestions for improvement of publications and blank forms. Additional blank sheets may be used if more space is needed.)*

TYPED NAME, GRADE OR TITLE	TELEPHONE EXCHANGE/AUTOVON, PLUS EXTENSION	SIGNATURE

USAPA V3.01

RECOMMENDED CHANGES TO PUBLICATIONS AND BLANK FORMS For use of this form, see AR 25-30; the proponent agency is OAASA	Use Part II *(reverse)* for Repair Parts and Special Tool Lists (RPSTL) and Supply Catalogs/Supply Manuals (SC/SM).	DATE
TO: *(Forward to proponent of publication or form) (Include ZIP Code)*	**FROM:** *(Activity and location) (Include ZIP Code)*	

PART I - ALL PUBLICATIONS (EXCEPT RPSTL AND SC/SM) AND BLANK FORMS

PUBLICATION/FORM NUMBER	DATE	TITLE

ITEM	PAGE	PARA-GRAPH	LINE	FIGURE NO.	TABLE	RECOMMENDED CHANGES AND REASON

* *Reference to line numbers within the paragraph or subparagraph.*

TYPED NAME, GRADE OR TITLE	TELEPHONE EXCHANGE/AUTOVON, PLUS EXTENSION	SIGNATURE

TO: *(Forward direct to addressee listed in publication)*	FROM: *(Activity and location) (Include ZIP Code)*	DATE

PART II - REPAIR PARTS AND SPECIAL TOOL LISTS AND SUPPLY CATALOGS/SUPPLY MANUALS

PUBLICATION NUMBER	DATE	TITLE

PAGE NO.	COLM NO.	LINE NO.	NATIONAL STOCK NUMBER	REFERENCE NO.	FIGURE NO.	ITEM NO.	TOTAL NO. OF MAJOR ITEMS SUPPORTED	RECOMMENDED ACTION

PART III - REMARKS *(Any general remarks or recommendations, or suggestions for improvement of publications and blank forms. Additional blank sheets may be used if more space is needed.)*

TYPED NAME, GRADE OR TITLE	TELEPHONE EXCHANGE/AUTOVON, PLUS EXTENSION	SIGNATURE

USAPA V3.01

THE METRIC SYSTEM AND EQUIVALENTS

LINEAR MEASURE

1 Centimeter = 10 Millimeters = 0.01 Meters = 0.3937 inches
1 Meter = 100 Centimeter = 1000 Millimeters = 39.37 inches
1 Kilometer = 1000 Meters = 0.621 Miles

SQUARE MEASURE

1 Sq. Centimeter = 100 Sq. Millimeters = 0.155 Sq. inches
1 Sq. Meter = 10,000 Sq. Centimeters = 10.76 Sq. Feet
1 Sq. Kilometer = 1,000,000 Sq. Meters = 0.386 Sq. Miles

WEIGHTS

1 Gram = 0.001 Kilograms = 1000 Milligrams = 0.035 Ounces
1 Kilogram = 1000 Grams = 2.2 Pounds
1 Metric Ton = 1000 Kilograms = 1 Megagram = 1.1 Short Tons

CUBIC MEASURE

1 Cu. Centimeter = 1000 Cu. Millimeter = 0.06 Cu. inches
1 Cu. Meter = 1,000,000 Cu. Centimeters = 35.31 Cu. Feet

LIQUID MEASURE

1 Milliliter = 0.001 Liters = 0.0338 Fluid Ounces
1 Liter = 1000 Milliliters = 33.82 Fluid Ounces

TEMPERATURE

5/9 (°F − 32) = °C 9/5 (°C + 32) = °F

212° Fahrenheit is equivalent to 100° Celsius
90° Fahrenheit is equivalent to 32.2° Celsius
32° Fahrenheit is equivalent to 0° Celsius

APPROXIMATE CONVERSION FACTORS

TO CHANGE	TO	MULTIPLY BY
Inches	Centimeters	2.540
Feet	Meters	0.305
Yards	Meters	0.914
Miles	Kilometers	1.609
Square Inches	Square Centimeters	6.451
Square Feet	Square Meters	0.093
Square Yards	Square Meters	0.836
Square Miles	Square Kilometers	2.590
Acres	Square Hectometers	0.405
Cubic Feet	Cubic Meters	0.028
Cubic Yards	Cubic Meters	0.765
Fluid Ounces	Milliliters	29.573
Pints	Liters	0.473
Quarts	Liters	0.946
Quarts	Liters	3.785
Ounces	Grams	28.349
Pounds	Kilograms	0.454
Short Tons	Metric Tons	0.907
Pound Feet	Newton Meters	1.356
Pound Inch	Newton Meters	0.113
Ounce Inch	Newton Meters	.007061
Pounds per Square Inch	Kilopascals	6.895
Miles per Gallon	Kilometers per Liter	0.425
Miles per Hour	Kilometers per Hour	1.609
Centimeters	Inches	0.394
Meters	Feet	3.280
Meters	Yards	1.094
Kilometers	Miles	0.621
Square Centimeters	Square Inches	0.155
Square Meters	Square Feet	10.764
Square Meters	Square Yards	1.196
Square Kilometers	Square Miles	0.386
Square Hectometers	Acres	2.471
Cubic Meters	Cubic Feet	35.375
Cubic Meters	Cubic Yards	1.308
Milliliters	Fluid Ounces	0.034
Liters	Pints	2.113
Liters	Quarts	1.057
Liters	Quarts	0.264
Kilograms	Pounds	2.205
Metric Tons	Short Tons	1.102
Newton Meters	Pound Feet	0.738
Newton Meters	Pound Inch	8.856
Newton Meters	Ounce Inch	141.696
Kilopascals	Pounds per Square Inch	0.145
Kilometers per Liter	Miles per Gallon	2.354
Kilometers per Hour	Miles per Hour	3.621

PIN: 027493-000