SHEETS									STATUS OF REVISIONS				
10	9	8	7	6	5	4	3	2	ZONE	LTR	DESCRIPTION	DATE	APPROVED
—	—	—	—	—	—	—	—	—		—	SEE ERR NO. TA13230E4900-	93-11-30	
A	A	A	A	A	—	—	A	—		A	SEE ECP NO. 94HE3091	94-04-08	FLETCHER
B	B	A	A	B	B	B	A	—		B	SEE ECP NO. 94HE3148	95-02-08	SLF
B	B	A	A	B	C	B	C	—		C	SEE ECP NO. 96HE3031, 96HE3063 AND 96HE3092R1	96-11-21	E...

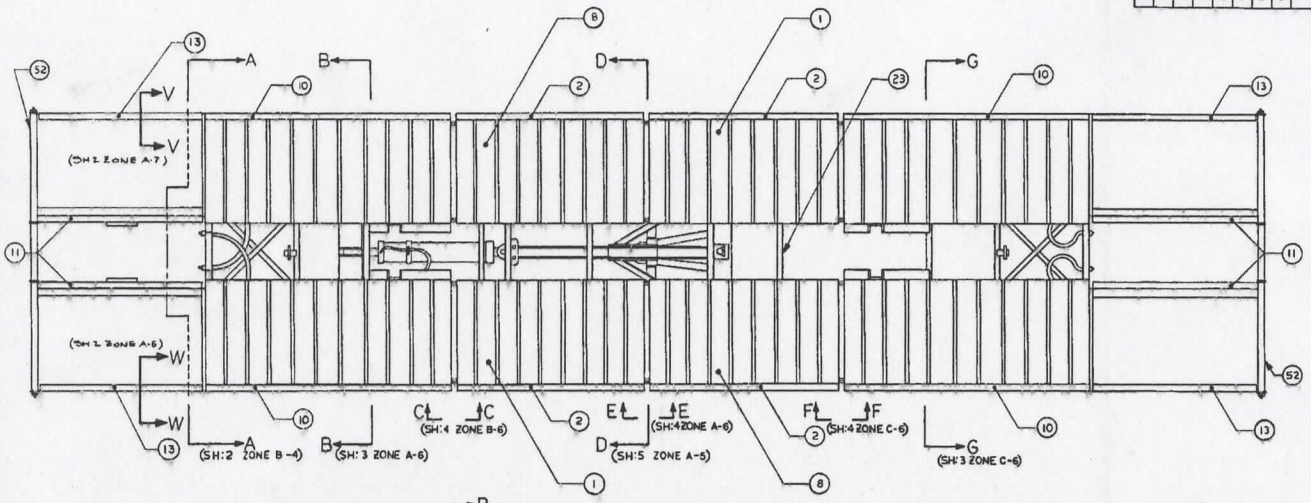

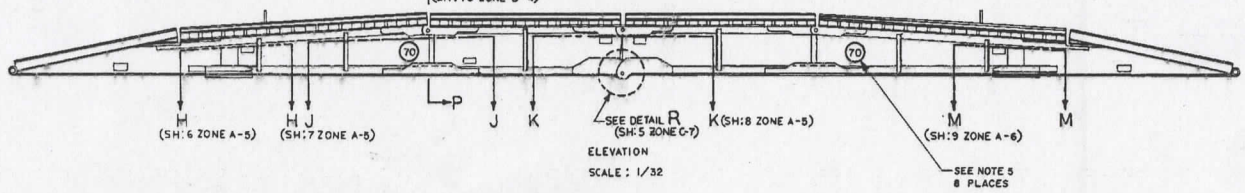

ELEVATION

SCALE: 1/32

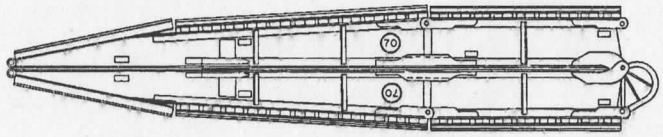

FOLDED ELEVATION

SCALE 1/32

NOTES:

1. ALL REQUIREMENTS OF PD 5420-0106 SHALL APPLY.
2. GOVERNMENT INSPECTION EQUIPMENT DESIGNS EXIST FOR THIS ITEM, SEE QUALITY ASSURANCE PAMPHLET FB-P715-105.
3. THE LOAD DISK ASSEMBLY, FIND NO. 55, AND ITS MOUNTING FASTENERS, FIND NOS. 56 AND 57, ARE NEW ITEMS AND ARE REQUIRED BY THIS CONVERSION EFFORT.
4. THE TRANSVERSE BRACES, FIND NO. 21, ARE TO BE ALTERED TO ACCOMODATE ATTACHMENT OF THE LOAD DISK ASSEMBLIES, FIND NO. 55.
5. THE CIRCLE 70 MARKING IS REQUIRED BY THIS CONVERSION EFFORT.
6. THE PANEL SUBASSEMBLIES, FIND NOS. 1 AND 8, CONTAIN ADDITIONAL MODIFICATIONS TO THIS CONVERSION EFFORT.
7. ALL PARTS THAT MAY REQUIRE REPLACEMENT AS A RESULT OF ANY NECESSARY REPAIR EFFORTS WILL BE REPLACED WITH THE RESPECTIVE PARTS IDENTIFIED IN THE PARTS LIST.
8. TOUCH UP WITH PAINT AFTER ASSEMBLY IN ACCORDANCE WITH MIL-T-704, TYPE F, FOR FERROUS METALS, TYPE G, FOR NONFERROUS METALS.

SEE SEPARATE PARTS LIST

FIND NO.	CAGE CODE	DWG SIZE	PART OR IDENTIFYING NO.	QTY REQD	NOMENCLATURE OR DESCRIPTION	SPECIFICATION	MATERIAL
					PARTS LIST		

UNLESS OTHERWISE SPECIFIED DIM/TOLERANCES ARE: mm/in.
ONE PLACE (.X) ± —
TWO PLACE (.XX) ± —
THREE PLACE (.XXX) ± —
ANGLES ± —
THIRD ANGLE PROJECTION

DO NOT SCALE THIS DRAWING

FOR INTERPRETATION OF DRAWING MIL-STD-100 APPLIES

REMOVE BURRS AND BREAK SHARP EDGES — SHARP EDGES — TO —
FILLET RADII — TO —

MATERIAL —

DRAWN BY JWB/BTO DATE 93-10-01
CHECKED BY QCWGP GT 93-10-04
CONTRACT NO. 2R341 DAAK70-92-D-0004
DESIGN APPROVAL
DATE 10 Dec 93
APPROVED FOR PROCUREMENT
DATE 10 Dec 93

U.S. ARMY
BELVOIR RESEARCH, DEVELOPMENT, AND ENGINEERING CENTER
FORT BELVOIR, VIRGINIA 22060-5606

BRIDGE, ARMORED-VEHICLE-LAUNCHED, SCISSORING TYPE, ALUMINUM, 63-FOOT LONG, CONVERTED MLC 60 TO MLC 70

SIZE A1 CAGE CODE 97403 DWG NO. 13230E4900
SCALE 1/4 SHEET 1 OF 10

DISTRIBUTION STATEMENT A.
APPROVED FOR PUBLIC RELEASE;
DISTRIBUTION IS UNLIMITED.

REVISIONS				
ZONE	LTR	DESCRIPTION	DATE	APPROVED
	—	SEE ERR NO. TAI3230E4900-	45-11-20	
	A	SEE ECP NO. 94HE3091	940408	FLETCHER
	C	SEE ECP NO. 96HE3063	96-11-21	BKH

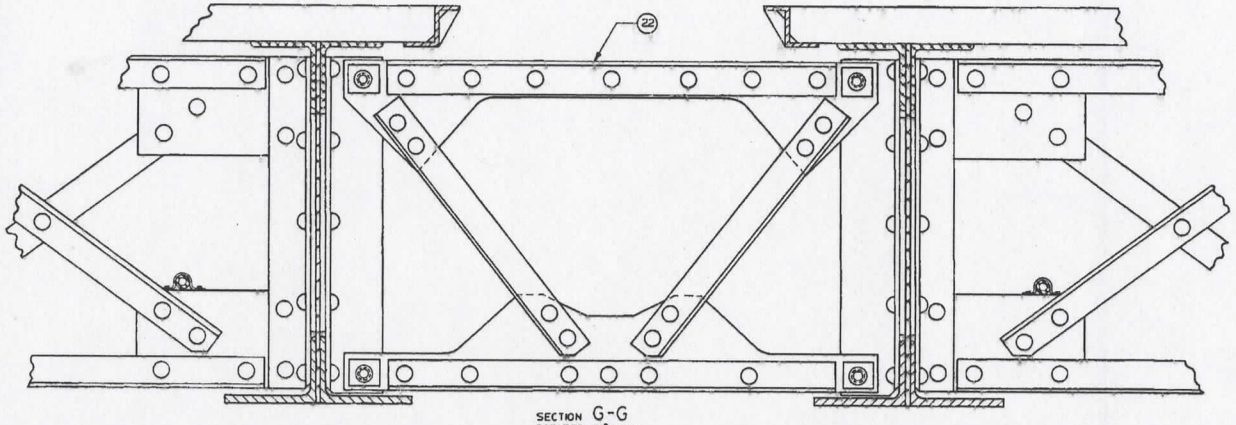

SECTION G-G
ROTATED 90° CCW
(SH:1 ZONE C-4)

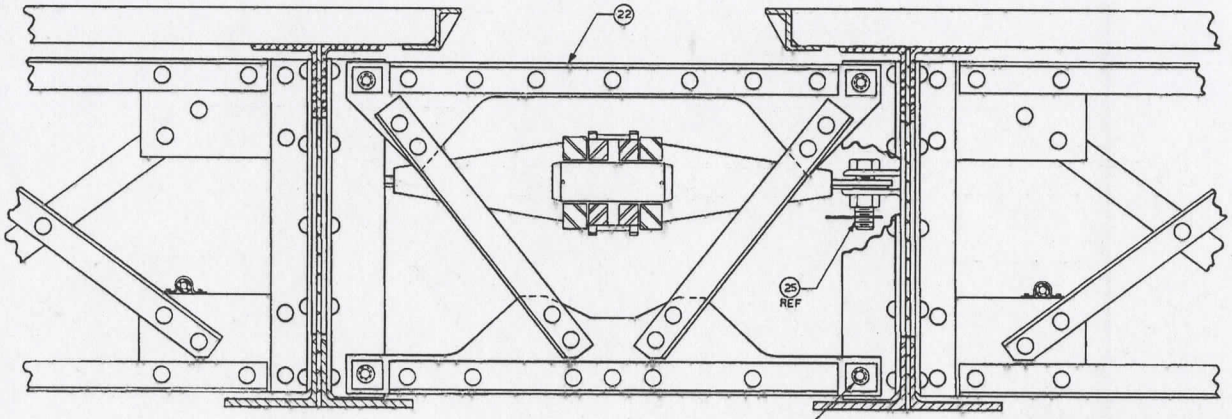

SECTION B-B
ROTATED 90° CW
(SH:1 ZONE C-7)

12
4 REQD

FIND NO.	CAGE CODE	DWG SIZE	PART OR IDENTIFYING NO.	QTY REQD	NOMENCLATURE OR DESCRIPTION	SPECIFICATION	MATERIAL

PARTS LIST

UNLESS OTHERWISE SPECIFIED DIM/TOLERANCES ARE: IN/IN.
ONE PLACE (.X) ±
TWO PLACE (.XX) ±
THREE PLACE (.XXX) ±
ANGLES ±
THIRD ANGLE PROJECTION

DO NOT SCALE THIS DRAWING

FOR INTERPRETATION OF DRAWING MIL-STD-100 APPLIES

REMOVE BURRS AND BREAK SHARP EDGES — SHARP EDGES TO; FILLET RADII TO

MATERIAL

DRAWN BY SRS/BTO — DATE 93-10-01
CHECKED BY QCWGP GT — 93-10-04
CONTRACT NO. 2R341 DAAK70-92-D-0004
DESIGN APPROVAL
DATE
APPROVED FOR PROCUREMENT
DATE 10 Dec 93

U.S. ARMY
BELVOIR RESEARCH, DEVELOPMENT, AND ENGINEERING CENTER
FORT BELVOIR, VIRGINIA 22060-5606

BRIDGE, ARMORED-VEHICLE-LAUNCHED,
SCISSORING TYPE, ALUMINUM,
63-FOOT LONG, CONVERTED
MLC 60 TO MLC 70

SIZE A1 | CAGE CODE 97403 | DWG NO. 13230E4900
SCALE | SHEET 3

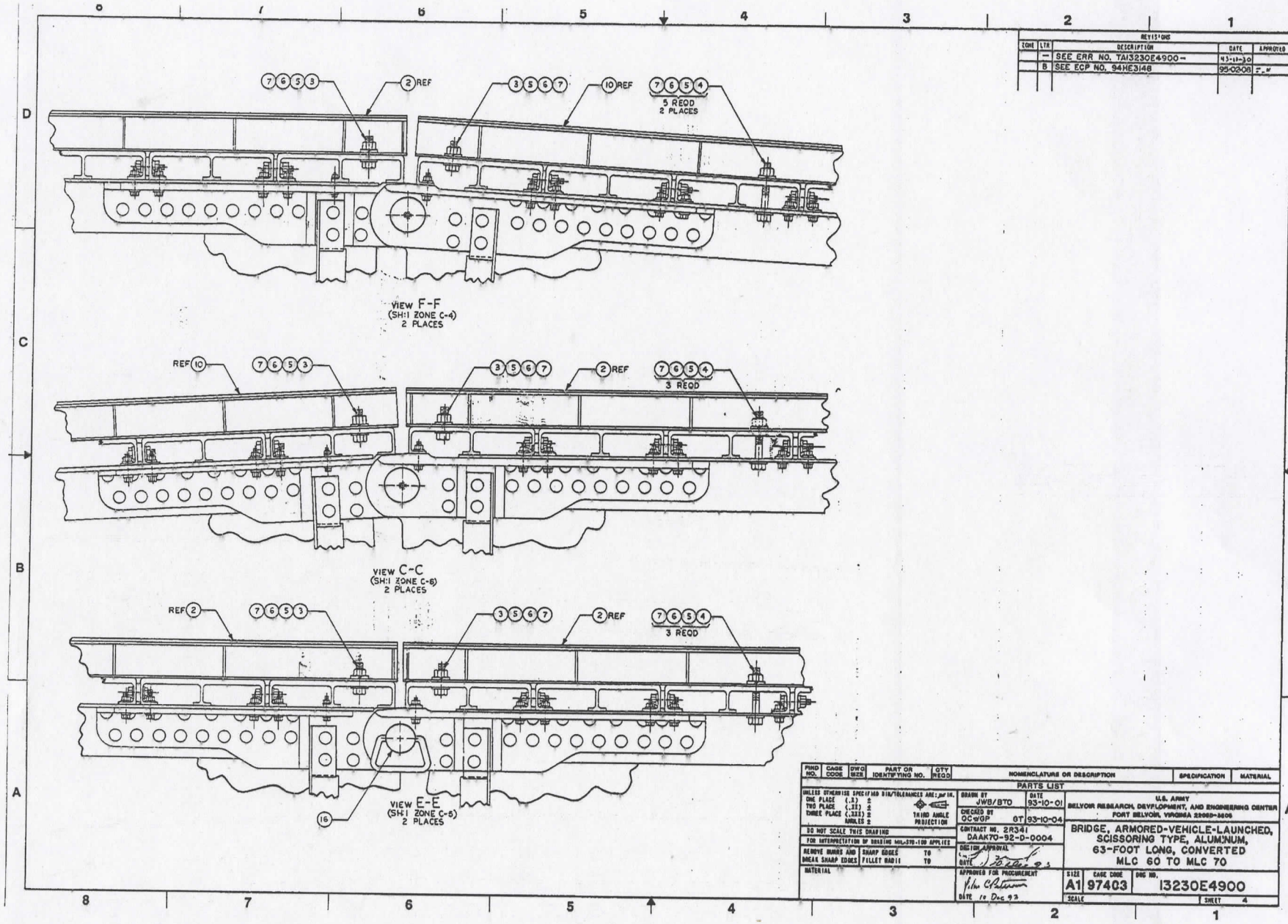

REVISIONS

ZONE	LTR	DESCRIPTION	DATE	APPROVED
	—	SEE ERR NO. TA13230E4900—	93-11-30	
	B	SEE ECP NO. 94HE3148	95-02-08	

FIND NO.	CAGE CODE	DWG SIZE	PART OR IDENTIFYING NO.	QTY REQD	NOMENCLATURE OR DESCRIPTION	SPECIFICATION	MATERIAL

PARTS LIST

UNLESS OTHERWISE SPECIFIED DIM/TOLERANCES ARE: per IN.
ONE PLACE (.X) ±
TWO PLACE (.XX) ±
THREE PLACE (.XXX) ±
ANGLES ±
THIRD ANGLE PROJECTION

DO NOT SCALE THIS DRAWING

FOR INTERPRETATION OF DRAWING MIL-STD-100 APPLIES

REMOVE BURRS AND BREAK SHARP EDGES — SHARP EDGES TO; FILLET RADII TO

MATERIAL

DRAWN BY JWB/BTO — DATE 93-10-01
CHECKED BY OC w/GP GT — DATE 93-10-04
CONTRACT NO. 2R341 DAAK70-92-D-0004
DESIGN APPROVAL — DATE 10 Dec 93
APPROVED FOR PROCUREMENT — DATE 10 Dec 93

U.S. ARMY
BELVOIR RESEARCH, DEVELOPMENT, AND ENGINEERING CENTER
FORT BELVOIR, VIRGINIA 22060-5606

BRIDGE, ARMORED-VEHICLE-LAUNCHED, SCISSORING TYPE, ALUMINUM, 63-FOOT LONG, CONVERTED MLC 60 TO MLC 70

SIZE A1 — CAGE CODE 97403 — DWG NO. 13230E4900
SCALE — SHEET 4

REVISIONS				
ZONE	LTR	DESCRIPTION	DATE	APPROVED
	—	SEE ERR NO. TA13230E4900-	93-11-30	
	B	SEE ECP NO. 94HE3148	95-02-08	DLF
	C	SEE ECP NO. 96HE3092R1	96-11-21	BKH

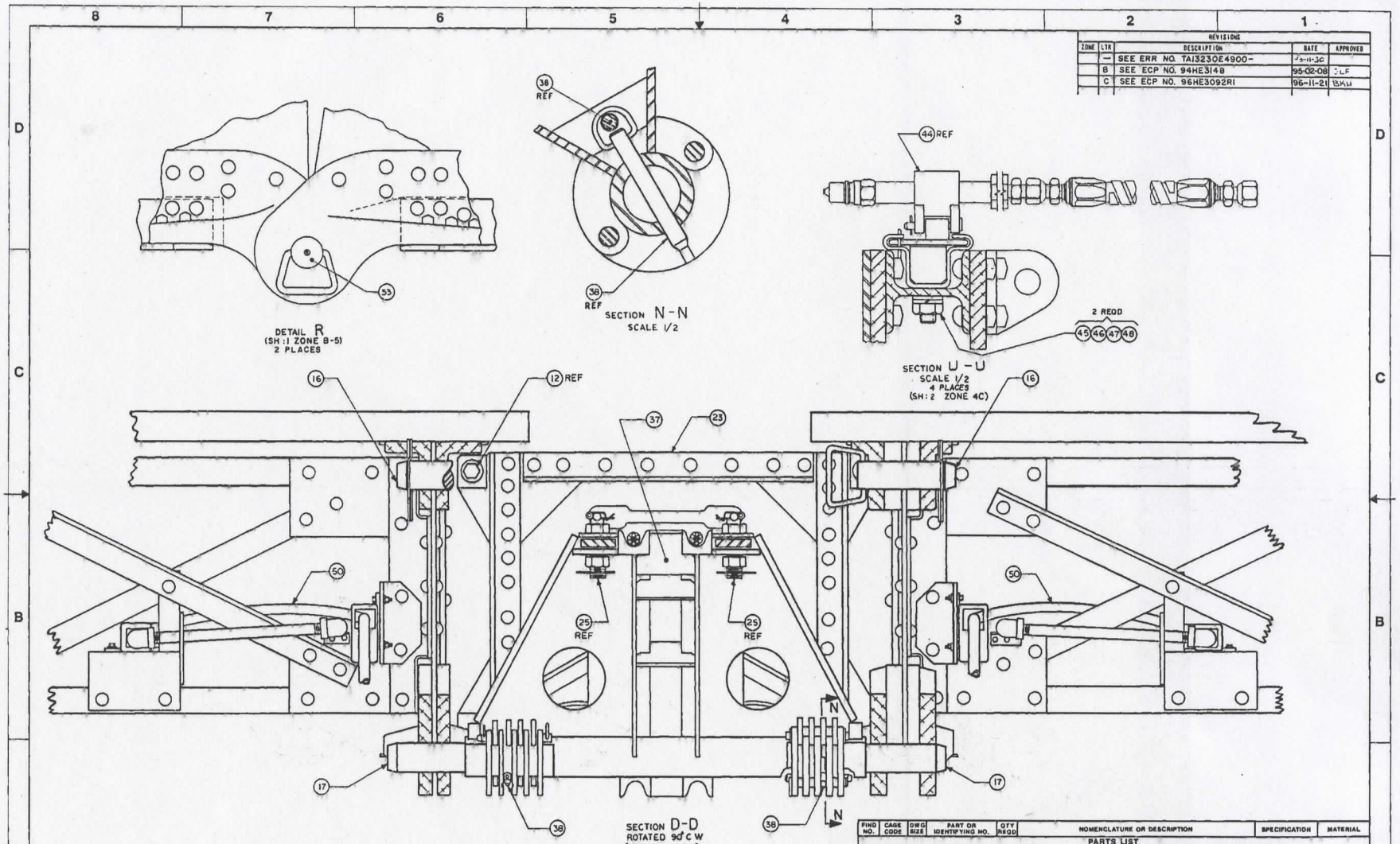

FIND NO.	CAGE CODE	DWG SIZE	PART OR IDENTIFYING NO.	QTY REQD	NOMENCLATURE OR DESCRIPTION	SPECIFICATION	MATERIAL

PARTS LIST

UNLESS OTHERWISE SPECIFIED DIM/TOLERANCES ARE: INCH
ONE PLACE (.X) ±
TWO PLACE (.XX) ±
THREE PLACE (.XXX) ±
ANGLES ±
THIRD ANGLE PROJECTION

DO NOT SCALE THIS DRAWING

FOR INTERPRETATION OF DRAWING MIL-STD-100 APPLIES

REMOVE BURRS AND BREAK SHARP EDGES — SHARP EDGES TO; FILLET RADII TO

MATERIAL

DRAWN BY SRS/BTO — DATE 93-10-01
CHECKED BY QCWGP GT — 93-10-04
CONTRACT NO. 2R341 DAAK70-92-D-0004
DESIGN APPROVAL — DATE 10 Dec 93
APPROVED FOR PROCUREMENT — DATE 10 Dec 93

U.S. ARMY
BELVOIR RESEARCH, DEVELOPMENT, AND ENGINEERING CENTER
FORT BELVOIR, VIRGINIA 22060-5606

BRIDGE, ARMORED-VEHICLE-LAUNCHED, SCISSORING TYPE, ALUMINUM, 63-FOOT LONG, CONVERTED MLC 60 TO MLC 70

SIZE A1 — CAGE CODE 97403 — DWG NO. 13230E4900
SCALE — SHEET 5

REVISIONS				
ZONE	LTR	DESCRIPTION	DATE	APPROVED
	—	SEE ERR NO. TAI3230E4900—	93-11-KJ	
	A	SEE ECP NO. 94HE3091	94-04-06	FLE-C-EA
	B	SEE ECP NO. 94HE3148	95-0206	FLF

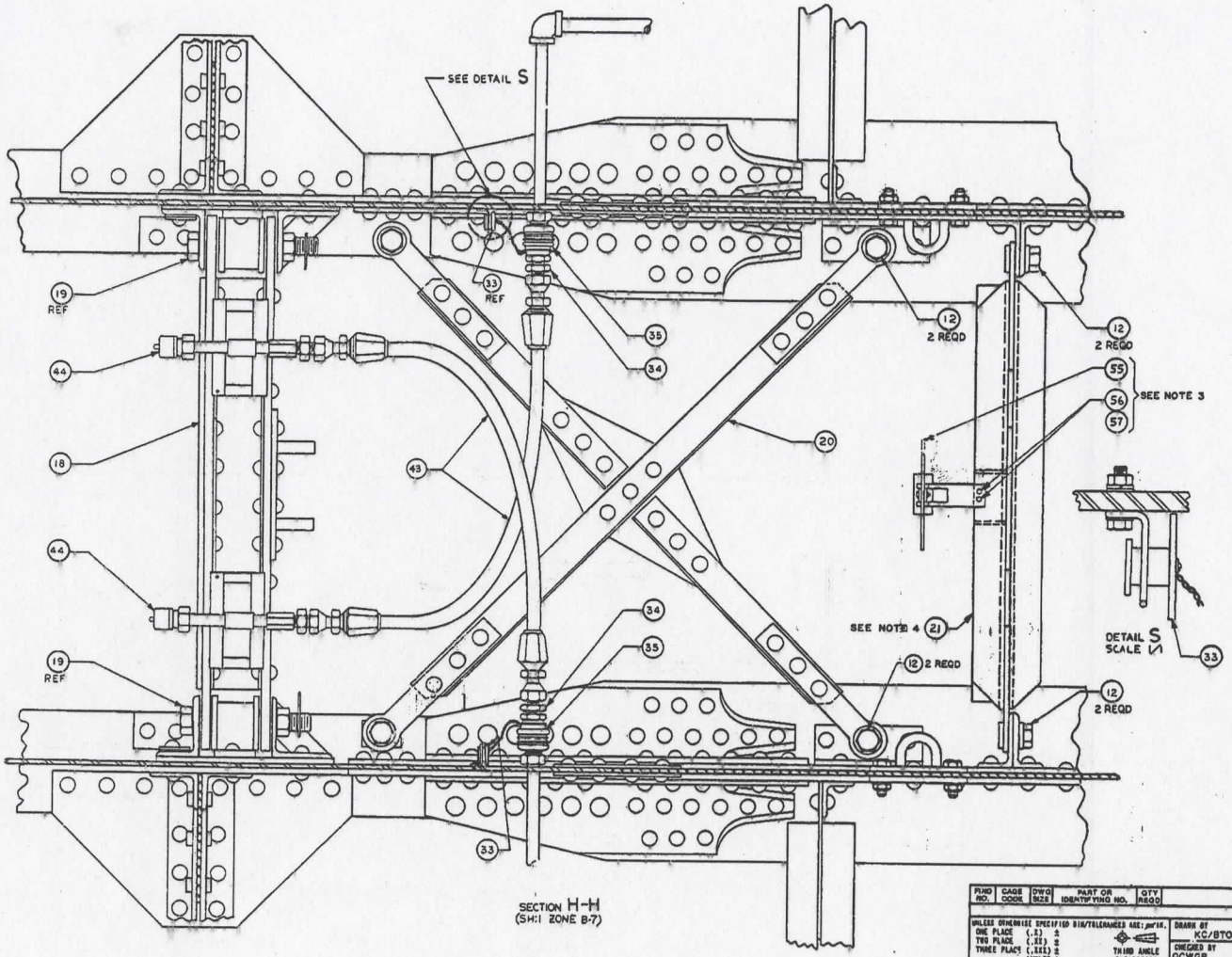

SECTION H-H
(SH:1 ZONE B-7)

FIND NO.	CAGE CODE	DWG SIZE	PART OR IDENTIFYING NO.	QTY REQD	NOMENCLATURE OR DESCRIPTION	SPECIFICATION	MATERIAL

PARTS LIST

UNLESS OTHERWISE SPECIFIED DIM/TOLERANCES ARE: per std.
ONE PLACE (.X) ±
TWO PLACE (.XX) ±
THREE PLACE (.XXX) ±
ANGLES ±
THIRD ANGLE PROJECTION

DO NOT SCALE THIS DRAWING
FOR INTERPRETATION OF DRAWING MIL-STD-100 APPLIES
REMOVE BURRS AND BREAK SHARP EDGES — SHARP EDGES TO ; FILLET RADII TO
MATERIAL

DRAWN BY KC/BTO — DATE 93-10-01
CHECKED BY QCWGP GT — DATE 93-10-04
CONTRACT NO. DAAK70-92-D-0004 2R341
DESIGN APPROVAL — DATE 25 Oct 93
APPROVED FOR PROCUREMENT — DATE 18 Dec 93

U.S. ARMY
BELVOIR RESEARCH, DEVELOPMENT, AND ENGINEERING CENTER
FORT BELVOIR, VIRGINIA 22060-5606

BRIDGE, ARMORED-VEHICLE-LAUNCHED,
SCISSORING TYPE, ALUMINUM,
63-FOOT LONG, CONVERTED
MLC 60 TO MLC 70

SIZE A1 — CAGE CODE 97403 — DWG NO. 13230E4900
SCALE — SHEET 6

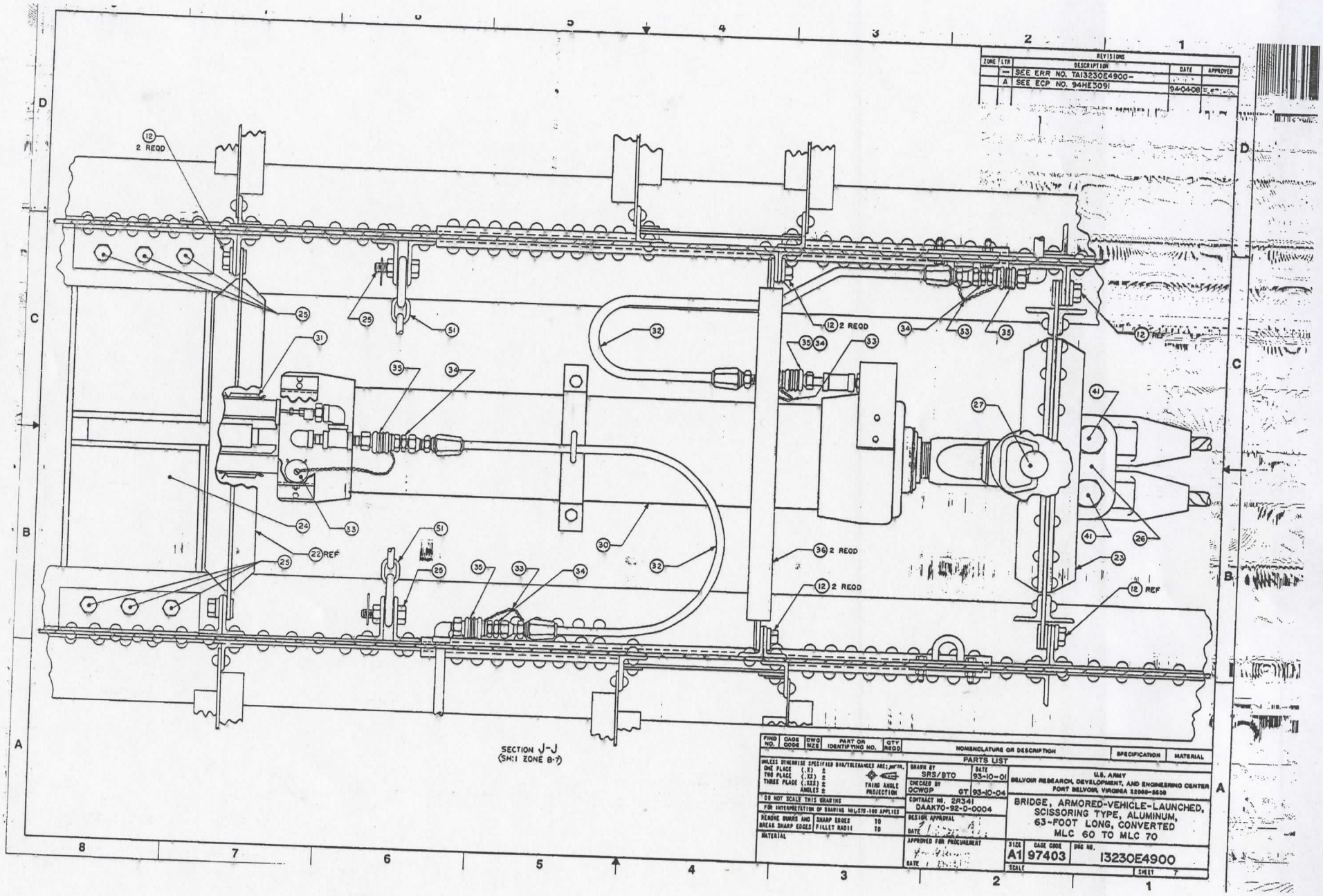

REVISIONS				
ZONE	LTR	DESCRIPTION	DATE	APPROVED
	—	SEE ERR NO. TA13230E4900-		
	A	SEE ECP NO. 94HE3091	94-04-08	

FIND NO.	CAGE CODE	DWG SIZE	PART OR IDENTIFYING NO.	QTY REQD	NOMENCLATURE OR DESCRIPTION	SPECIFICATION	MATERIAL
					PARTS LIST		

UNLESS OTHERWISE SPECIFIED DIM/TOLERANCES ARE: INCH
ONE PLACE (.X) ±
TWO PLACE (.XX) ±
THREE PLACE (.XXX) ±
ANGLES ±
THIRD ANGLE PROJECTION

DO NOT SCALE THIS DRAWING

FOR INTERPRETATION OF DRAWING MIL-STD-100 APPLIES

REMOVE BURRS AND BREAK SHARP EDGES — SHARP EDGES TO; FILLET RADII TO

MATERIAL

DRAWN BY SRS/BTO — DATE 93-10-01
CHECKED BY OCWGP GT — DATE 93-10-04
CONTRACT NO. 2R341 DAAK70-92-D-0004
DESIGN APPROVAL — DATE
APPROVED FOR PROCUREMENT — DATE

U.S. ARMY
BELVOIR RESEARCH, DEVELOPMENT, AND ENGINEERING CENTER
FORT BELVOIR, VIRGINIA 22060-5606

BRIDGE, ARMORED-VEHICLE-LAUNCHED, SCISSORING TYPE, ALUMINUM, 63-FOOT LONG, CONVERTED MLC 60 TO MLC 70

SIZE A1 — CAGE CODE 97403 — DWG NO. 13230E4900
SCALE — SHEET 7

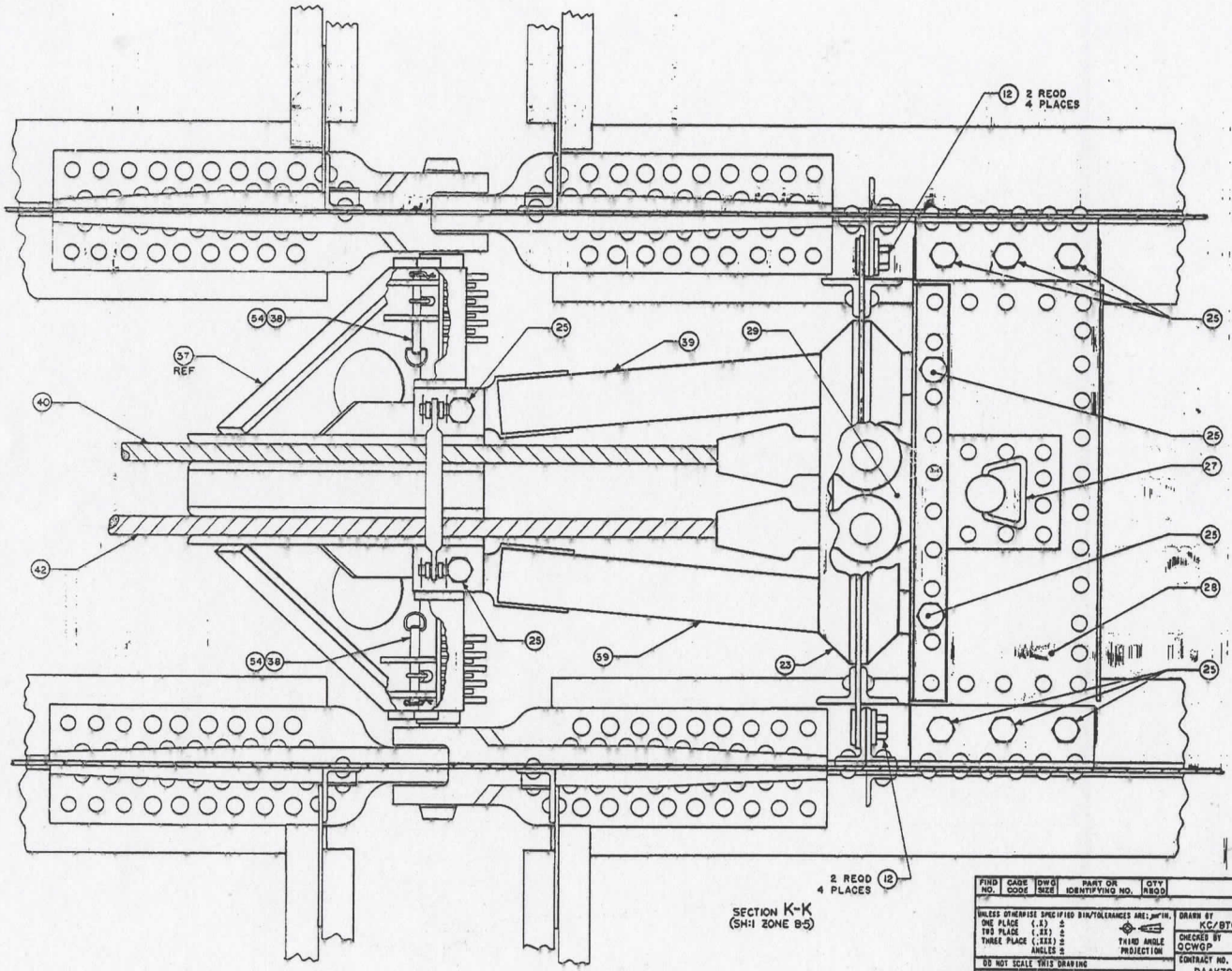

REVISIONS				
ZONE	LTR	DESCRIPTION	DATE	APPROVED
	—	SEE ERR NO. TA13230E4900-	93 11-4	
	A	SEE ECP NO. 94HE3091	940408	

FIND NO.	CAGE CODE	DWG SIZE	PART OR IDENTIFYING NO.	QTY REQD	NOMENCLATURE OR DESCRIPTION	SPECIFICATION	MATERIAL

PARTS LIST

UNLESS OTHERWISE SPECIFIED DIM/TOLERANCES ARE: per in.
ONE PLACE (.X) ±
TWO PLACE (.XX) ±
THREE PLACE (.XXX) ±
ANGLES ±
THIRD ANGLE PROJECTION

DO NOT SCALE THIS DRAWING

FOR INTERPRETATION OF DRAWING MIL-STD-100 APPLIES

REMOVE BURRS AND BREAK SHARP EDGES — SHARP EDGES 10 — FILLET RADII 10

MATERIAL

DRAWN BY KC/BTO — DATE 93-10-01
CHECKED BY OCWOP GT — DATE 93-10-04
CONTRACT NO. 2R341 DAAK70-92-D-0004
DESIGN APPROVAL
DATE
APPROVED FOR PROCUREMENT
DATE 10 Dec 93

U.S. ARMY
BELVOIR RESEARCH, DEVELOPMENT, AND ENGINEERING CENTER
FORT BELVOIR, VIRGINIA 22060-5606

BRIDGE, ARMORED-VEHICLE-LAUNCHED, SCISSORING TYPE, ALUMINUM, 63-FOOT LONG; CONVERTED MLC 60 TO MLC 70

SIZE	CAGE CODE	DWG NO.
A1	97403	13230E4900

SCALE — SHEET 8

REVISIONS				
ZONE	LTR	DESCRIPTION	DATE	APPROVED
	-	SEE ERR NO. TA13230E4900-	[illegible]	
	A	SEE ECP NO. 94HE3091	94-04-08	[illegible]
	B	SEE ECP NO. 94HE3148	95-02-08	[illegible]

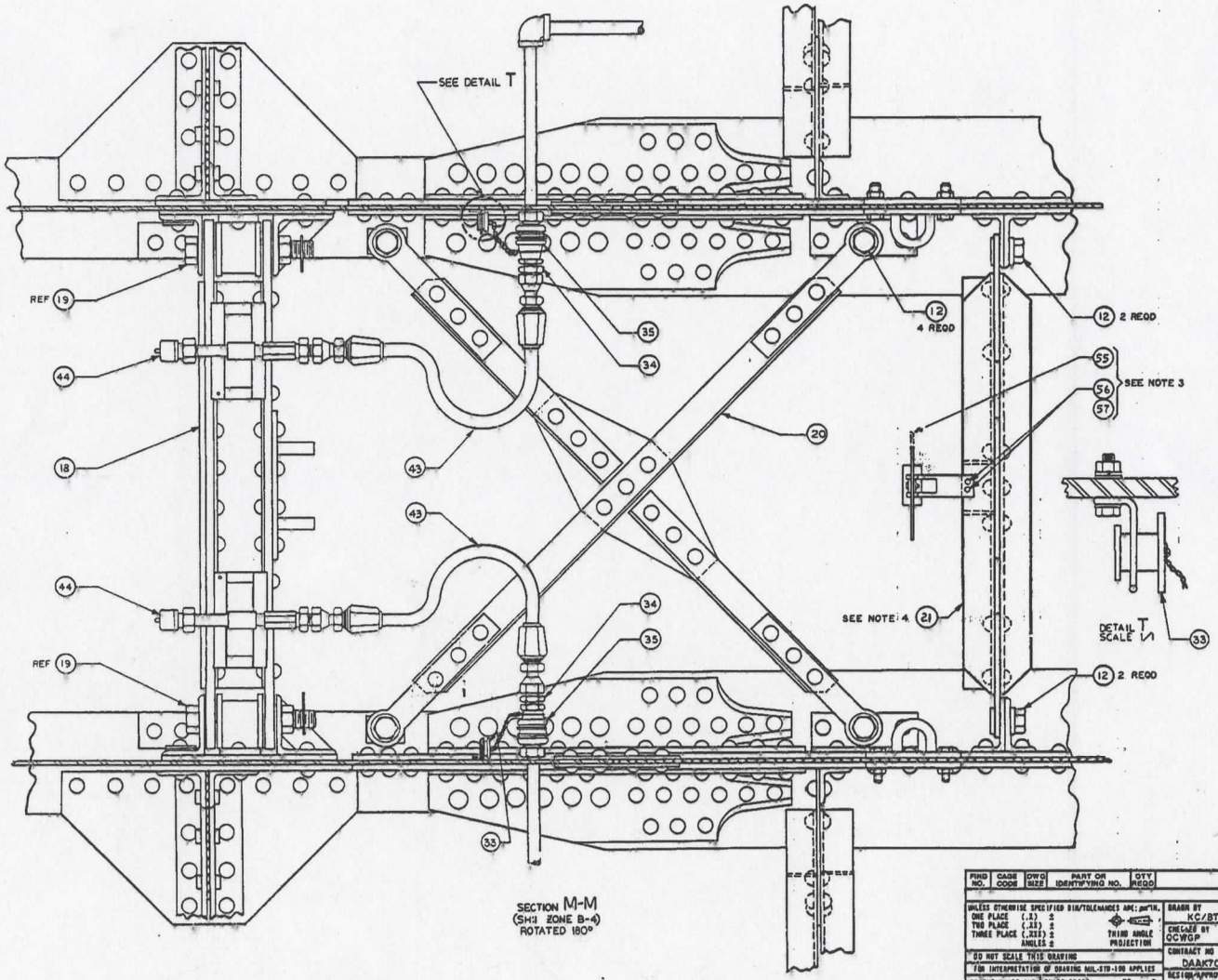

FIND NO.	CAGE CODE	DWG SIZE	PART OR IDENTIFYING NO.	QTY REQD	NOMENCLATURE OR DESCRIPTION	SPECIFICATION	MATERIAL

PARTS LIST

UNLESS OTHERWISE SPECIFIED DIM/TOLERANCES ARE: μm/in.
ONE PLACE (.X) ±
TWO PLACE (.XX) ±
THREE PLACE (.XXX) ±
ANGLES ±
THIRD ANGLE PROJECTION

DO NOT SCALE THIS DRAWING

FOR INTERPRETATION OF DRAWING MIL-STD-100 APPLIES

REMOVE BURRS AND BREAK SHARP EDGES — SHARP EDGES TO FILLET RADII TO

MATERIAL

DRAWN BY KC/BTO — DATE 93-10-01
CHECKED BY QCWGP GT — 93-10-04
CONTRACT NO 2R341 DAAK70-92-D-0004
DESIGN APPROVAL
DATE
APPROVED FOR PROCUREMENT
DATE 14 Dec 93

U.S. ARMY
BELVOIR RESEARCH, DEVELOPMENT, AND ENGINEERING CENTER
FORT BELVOIR, VIRGINIA 22060-5606

BRIDGE, ARMORED-VEHICLE-LAUNCHED,
SCISSORING TYPE, ALUMINUM,
63-FOOT LONG, CONVERTED
MLC 60 TO MLC 70

SIZE A1 | CAGE CODE 97403 | DWG NO. 13230E4900
SCALE | SHEET 9

REVISIONS				
ZONE	LTR	DESCRIPTION	DATE	APPROVED
	–	SEE ERR NO. TA13230E4900–	93 11 30	
	A	SEE ECP NO. 94HE3091	94-04-08	[illegible]
	B	SEE ECP NO. 94HE3148	95-02-08	[illegible]

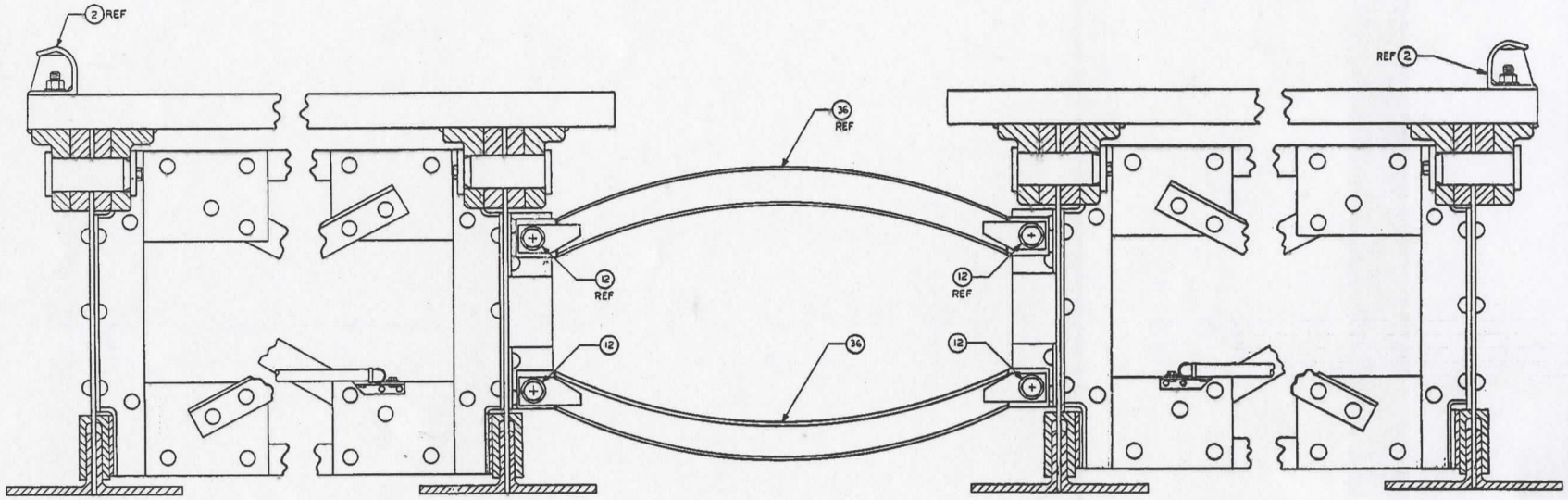

SECTION P-P
(SH: 1 ZONE B-6)

FIND NO.	CAGE CODE	DWG SIZE	PART OR IDENTIFYING NO.	QTY REQD	NOMENCLATURE OR DESCRIPTION	SPECIFICATION	MATERIAL

PARTS LIST

UNLESS OTHERWISE SPECIFIED DIM/TOLERANCES ARE: mm/IN.
ONE PLACE (.X) ±
TWO PLACE (.XX) ±
THREE PLACE (.XXX) ±
ANGLES ±
THIRD ANGLE PROJECTION

DO NOT SCALE THIS DRAWING

FOR INTERPRETATION OF DRAWING MIL-STD-100 APPLIES

REMOVE BURRS AND BREAK SHARP EDGES | SHARP EDGES TO | FILLET RADII TO

MATERIAL

DRAWN BY SRS/BTO | DATE 93-10-01
CHECKED BY QCWGP GT | 93-10-04
CONTRACT NO. 2R341 DAAK70-92-D-0004
DESIGN APPROVAL
DATE 10 Dec 93
APPROVED FOR PROCUREMENT
DATE 10 Dec 93

U.S. ARMY
BELVOIR RESEARCH, DEVELOPMENT, AND ENGINEERING CENTER
FORT BELVOIR, VIRGINIA 22060-5606

BRIDGE, ARMORED-VEHICLE-LAUNCHED, SCISSORING TYPE, ALUMINUM, 63-FOOT LONG, CONVERTED MLC 60 TO MLC 70

SIZE A1 | CAGE CODE 97403 | DWG NO. 13230E4900
SCALE | SHEET 10