CHANGE

NO.1

HEADQUARTERS
DEPARTMENT OF THE ARMY
Washington D.C.,*24 May 1993*

MODIFICATION WORK ORDER

VEHICLE	MODEL	NSN
Truck, Utility, 1-1/4 Ton, 4x4:		
Cargo/Troop Carrier	M998	2320-01-107-7155
Cargo/Troop Carrier, W/Winch	M1038	2320-01-107-7156
TOW Carrier, Armored	M966	2320-01-107-7153
TOW Carrier, Armored, W/Winch	M1036	2320-01-107-7154
TOW Carrier, W/Supplemental Armor	M1045	2320-01-146-7191
TOW Carrier, W/Supplemental Armor, W/Winch	M1046	2320-01-146-7188
Armament Carrier, Armored	M1025	2320-01-128-9551
Armament Carrier, Armored, W/Winch	M1026	2320-01-128-9552
Armament Carrier, W/Supplemental Armor	M1043	2320-01-146-7190
Armament Carrier, W/Supplemental Armor, W/Winch	M1044	2320-01-146-7189
S250 Shelter Carrier	M1037	2320-01-146-7193
S250 Shelter Carrier, W/Winch	M1042	2320-01-146-7187
Truck, Ambulance, 4x4:		
2-Litter, Armored	M996	2310-01-111-2275
4-Litter, Armored	M997	2310-01-111-2274
2-Litter, Soft Top	M1035	2320-01-146-7194

MWO 9-2320-280-20-1, 6 June 1992, is changed as follows:

1. Remove old pages and insert new pages as indicated below.
2. New or changed material is indicated by a vertical bar in the margin of the page.

Remove pages	Insert pages
1 and 2	1 and 2

3. File this change sheet in front of the publication for reference purposes.

APPROVED FOR PUBLIC RELEASE; DISTRIBUTION IS UNLIMITED.

By Order of the Secretary of the Army:

GORDON R. SULLIVAN
General, United States Army
Chief of Staff

Official:

MILTON H. HAMILTON
Administrative Assistant to the
Secretary of the Army

04211

Distribution:

To be distributed in accordance with DA Form 12-38-E, Block No. 0922, maintenance requirements for MWO 9-2320-280-20-1.

NORMAL

MWO effective date is 1 October 1992 and completion date is 30 September 1996

MWO 9-2320-280-20-1

MODIFICATION WORK ORDER

MODIFICATION OF 1-1/4 TON VEHICLES

M998 SERIES

NOMENCLATURE	NSN
Truck, Utility, 1-1/4 Ton, 4x4:	
Cargo/Troop Carrier	2320-01-107-7155
Cargo/Troop Carrier, W/Winch	2320-01-107-7156
TOW Carrier, Armored	2320-01-107-7153
TOW Carrier, Armored, W/Winch	2320-01-107-7154
TOW Carrier, W/Supplemental Armor	2320-01-146-7191
TOW Carrier, W/Supplemental Armor, W/Winch	2320-01-146-7188
Armament Carrier, Armored	2320-01-128-9551
Armament Carrier, Armored, W/Winch	2320-01-128-9552
Armament Carrier, W/Supplemental Armor	2320-01-146-7190
Armament Carrier, W/Supplemental Armor, W/Winch	2320-01-146-7189
S250 Shelter Carrier	2320-01-146-7193
S250 Shelter Carrier, W/Winch	2320-01-146-7187
Truck, Ambulance, 4x4:	
2-Litter, Armored	2310-01-111-2275
4-Liter, Armored	2310-01-111-2274
2-Litter, Soft Top	2320-01-146-7194

Headquarters, Department of the Army, Washington, D.C.

6 June 1992

REPORTING OF ERRORS AND RECOMMENDING IMPROVEMENTS

You can help improve this MWO. If you find any mistakes or if you know of a way to improve these procedures, please let us know. Write a letter or complete and mail a DA Form 2028, Recommended Changes to Publications and Blank Forms, to: U.S. Army Tank-Automotive Command, ATTN: AMSTA-MB, Warren, MI 48397-5000. A reply will be provided to you.

APPROVED FOR PUBLIC RELEASE; DISTRIBUTION IS UNLIMITED.

Change 1

1. PURPOSE.

This modification provides a retrofit to the latest configuration of power steering systems on M998 Series vehicles fielded under contract DAAEO7-83-C-R034.

2. PRIORITY.

This modification is classified as NORMAL.

3. END ITEM TO BE MODIFIED.

a. Truck, 1-1/4 Ton, 4x4, M998 Series, serial numbers 1 through 72234, inclusively, fielded under contract DAAEO7-83-C-R034.

NOMENCLATURE	NSN	PART NO.	CAGE	MODEL NO.
Truck, Utility, 1-1/4 Ton, 4x4:				
Cargo/Troop Carrier	2320-01-107-7155	8750055	19207	M998
Cargo/Troop Carrier,W/W	2320-01-107-7156	8750057	19207	M1038
TOW Carrier, Armored	2320-01-107-7153	8750058	19207	M966
TOW Carrier, Armored, W/W	2320-01-107-7154	8750050	19207	M1036
TOW Carrier, W/Supp Armor	2320-01-146-7191	8750082	19207	M1045
TOW Carrier, W/Supp Armor, W/W	2320-01-146-7188	8750083	19207	M1046
Armament Carrier, Armored	2320-01-128-9551	8750124	19207	M1025
Armament Carrier, Armored, W/W	2320-01-128-9552	8750123	19207	M1026
Armament Carrier, W/Supp Armor	2320-01-146-7190	8750122	19207	M1043
Armament Carrier, W/Supp Armor, W	2320-01-146-7189	8750121	19207	M1044
S250 Shelter Carrier	2320-01-146-7193	8750117	19207	M1037
S250 Shelter Carrier W/W	2320-01-146-7187	8750124	19207	M1042
Truck, Ambulance, 4x4:				
2-Litter, Armored	2310-01-111-2275	8750060	19207	M996
4-Litter, Armored	2310-01-111-2274	8750059	19207	M997
2-Litter, Soft Top	2310-01-146-7194	8750116	19207	M1035

b. Vehicle National Stock Number (NSN) will not change as a result of this MWO.

4. MODULE TO BE MODIFIED.

Not applicable.

5. PARTS TO BE MODIFIED.

Not applicable.

6. APPLICATION

a. Time Compliance Schedule: The effective date of this MWO is 1 October 1992 and its completion date is 30 September 1996.

b. The lowest level of maintenance authorized to apply the MWO is Unit.

c. Work force and man-hour requirements for application of the MWO to a single unit, end item or system:

PIN: 070134–001

★U.S. GOVERNMENT PRINTING OFFICE 1993-746-017/80193

LIBRARY LOAN COPY
NORMAL

MWO effective date is 1 October 1992 and completion date is 30 September 1996

MWO 9-2320-280-20-1

MODIFICATION WORK ORDER

MODIFICATION OF 1-1/4 TON VEHICLES

M998 SERIES

NOMENCLATURE	NSN
Truck, Utility, 1-1/4 Ton, 4x4:	
Cargo/Troop Carrier	2320-01-107-7155
Cargo/Troop Carrier, W/Winch	2320-01-107-7156
TOW Carrier, Armored	2320-01-107-7153
TOW Carrier, Armored, W/Winch	2320-01-107-7154
TOW Carrier, W/Supplemental Armor	2320-01-146-7191
TOW Carrier, W/Supplemental Armor, W/Winch	2320-01-146-7188
Armament Carrier, Armored	2320-01-128-9551
Armament Carrier, Armored, W/Winch	2320-01-128-9552
Armament Carrier, W/Supplemental Armor	2320-01-146-7190
Armament Carrier, W/Supplemental Armor, W/Winch	2320-01-146-7189
Truck, Ambulance, 4x4:	
2-Litter, Soft Top	2320-01-146-7194

Headquarters, Department of the Army, Washington, D.C.

6 June 1992

REPORTING OF ERRORS AND RECOMMENDING IMPROVEMENTS

You can help improve this MWO. If you find any mistakes or if you know of a way to improve these procedures, please let us know. Write a letter or complete and mail a DA Form 2028, Recommended Changes to Publications and Blank Forms, to: U.S. Army Tank-Automotive Command, ATTN: AMSTA-MB, Warren, MI 48397-5000. A reply will be provided to you.

APPROVED FOR PUBLIC RELEASE; DISTRIBUTION IS UNLIMITED.

1. PURPOSE.

This modification provides a retrofit to the latest configuration of power steering systems on M998 Series vehicles fielded under contract DAAEO7-83-C-R034.

2. PRIORITY.

This modification is classified as NORMAL.

3. END ITEM TO BE MODIFIED.

a. Truck, 1-1/4 Ton, 4x4, M998 Series, serial numbers 1 through 72234, inclusively, fielded under contract DAAEO7-83-C-R034.

NOMENCLATURE	NSN	PART NO.	CAGE	MODEL NO.
Truck, Utility, 1-1/4 Ton, 4x4:				
Cargo/Troop Carrier	2320-01-107-7155	8750055	19207	M998
Cargo/Troop Carrier,W/W	2320-01-107-7156	8750057	19207	M1038
TOW Carrier, Armored	2320-01-107-7153	8750058	19207	M966
TOW Carrier, Armored, W/W	2320-01-107-7154	8750050	19207	M1036
TOW Carrier, W/Supp Armor	2320-01-146-7191	8750082	19207	M1045
TOW Carrier, W/Supp Armor, W/W	2320-01-146-7188	8750083	19207	M1046
Armament Carrier, Armored	2320-01-128-9551	8750124	19207	M1025
Armament Carrier, Armored, W/W	2320-01-128-9552	8750123	19207	M1026
Armament Carrier, W/Supp Armor	2320-01-146-7190	8750122	19207	M1043
Armament Carrier, W/Supp Armor, W/	2320-01-146-7189	8750121	19207	M1044
Truck, Ambulance, 4x4:				
2-Litter, Soft Top	2310-01-146-7194	8750116	19207	M1035

b. Vehicle National Stock Number (NSN) will not change as a result of this MWO.

4. MODULE TO BE MODIFIED.

Not applicable.

5. PARTS TO BE MODIFIED.

Not applicable.

6. APPLICATION

a. Time Compliance Schedule: The effective date of this MWO is 1 October 1992 and its completion date is 30 September 1996.

b. The lowest level of maintenance authorized to apply the MWO is Unit.

c. Work force and man-hour requirements for application of the MWO to a single unit, end item or system:

REQUIREMENTS	
WORK FORCE/SKILLS	**MAN-HOUR**
*1 Wheeled Vehicle Mechanic (MOS 63B) or equivalent	1.5
*1 mechanic can apply this modification. An assistant is required for removal and installation of the hood only.	

7. TECHNICAL PUBLICATIONS AFFECTED/CHANGED AS A RESULT OF THE MWO.

Technical Publication	DATE
TM 9-2320-280-20-2	19 January 1990
TM 9-2320-280-20P	8 June 1987
TM 9-2320-280-34P	18 June 1987

8. MWO KITS, PARTS, AND THEIR DISPOSITION.

a. The following kit is required to accomplish this modification. The security classification of the kit is unclassified.

NSN	NOMENCLATURE	CAGE	PART NO.
2530-01-321-449	Power Steering Oil Cooler Kit	19207	5705612

b. Power Steering Oil Cooler Kit component parts are listed below. The listing is used to inventory the kit for completeness.

NSN	NOMENCLATURE	CAGE	PART NO.	QTY.
5310-01-185-7214	Washer	19207	12339052	2
2520-01-316-2630	Cooler, fluid	19207	12342142	1
5305-00-992-6143	Screw, socket head	96906	MS16995-72	2
5310-00-081-4219	Washer	96906	MS27183-12	2
5310-00-087-7493	Washer	96906	MS27183-13	2
5975-00-985-6630	Tiedown	96906	MS3367-3-0	1
4730-00-954-1281	Plug	81348	WW-P-471ACABCB	1
5310-00-167-0721	Washer	24617	138538	2
	Clamp	19207	12339884-1	2
	Hose	19207	12338330-6	1
	Hose	19207	12338330-7	1
	Installation instructions	19207	12342280	1

c. Bulk and expandable material.

NSN	NOMENCLATURE	CAGE	PART NO.	QTY. REQD TO ACCOMPLISH ONE TASK
	Sealant		12297953	50ML

d. Parts dispositon. Parts not used or parts removed and not used are to be discarded.

9. SPECIAL TOOLS; TOOL KITS; JIGS; TEST, MEASUREMENT AND DIAGNOSTIC EQUIPMENT (TMDE); AND FIXTURES REQUIRED.

a. Hand tools necessary to apply MWO are contained in this tool kit.

NOMENCLATURE	NSN	CAGE	SUPPLY CATALOGUE
Tool Kit, General Mechanic's	5180-00-177-7033	50980	SC 5180-90-CL-N26

10. MODIFICATION PROCEDURES.

a. VEHICLE PREPARATION.

(1) Disconnect battery ground cable. (Refer to TM 9-2320-280-20.)

(2) Remove hood. (Refer to TM 9-2320-280-20.)

(3) Remove left side splash shield. (Refer to TM 9-2320-280-20.)

(4) Remove drainplug from oil cooler as shown in figure 1.

NOTE

Apply sealant to threads of plug prior to installation.

(5) Install WW-P-471ACABCB plug in oil cooler as shown in figure 1.

(6) Remove two lower screws and washers from oil cooler as shown in figure 1.

(7) Remove two nuts, washers, screws, and clamps from power steering hoses as shown in figure 2. Save for installation.

(8) Remove two clamps and hose from control valve elbow and steering gear as shown in figure 2. Save for installation.

b. INSTALLATION, POWER STEERING OIL COOLER.

(1) Position two MS16995-72 screws, 138538 washers, and MS27183-12 washers to 12342142 power steering oil cooler as shown in figure 3.

(2) Position two 12339052 washers and MS27183-13 washers to oil cooler as shown in figure 3.

(3) Install power steering oil cooler to oil cooler and secure with two screws as shown in figure 3. Tighten screws to 12-14 lb-ft (14-18 N m).

(4) Install 12338330-6 hose to power steering oil cooler and power steering gear and secure with 12339884-1 clamp and existing clamp as shown in figure 4.

(5) Install 12338330-7 hose to power steering oil cooler and control valve elbow and secure with 12339884-1 clamp and existing clamp as shown in figure 4.

(6) Position two existing clamps on hose and secure with two screws, washers, and nuts as shown in figure 4.

(7) Secure hoses with MS3367-3-0 tiedown as shown in figure 4.

c. FINAL VEHICLE PREPARATION

(1) Install left side splash shield. (Refer to TM 9-2320-280-20.)

(2) Install hood. (Refer to TM 9-2320-280-20.)

(3) Connect battery ground cable. (Refer to TM 9-2320-280-20.)

(4) Bleed power steeing system. (Refer to TM 9-2320-280-20.)

(5) Start engine. Check hoses and fittings for leaks.

11. CALIBRATION REQUIREMENTS.

Not applicable to this MWO.

12. WEIGHT AND BALANCE DATA.

Weight and balance are not affected by this MWO.

13. QUALITY ASSURANCE REQUIREMENTS.

Refer to paragraph 10.c.

14. RECORDING AND REPORTING OF THE MODIFICATION.

Recording and reporting instructions for this MWO are provided in Chapter 3 of DA PAM 738-750, update 12.

15. MATERIAL CHANGE PROGRAM NUMBER.

This MWO is authorized by Material Change Program number 1-91-06-4308.

16. MODIFICATION IDENTIFICATION.

No special marking will be added to the vehicle as application of this MWO will upgrade the power steering system to current production configuration.

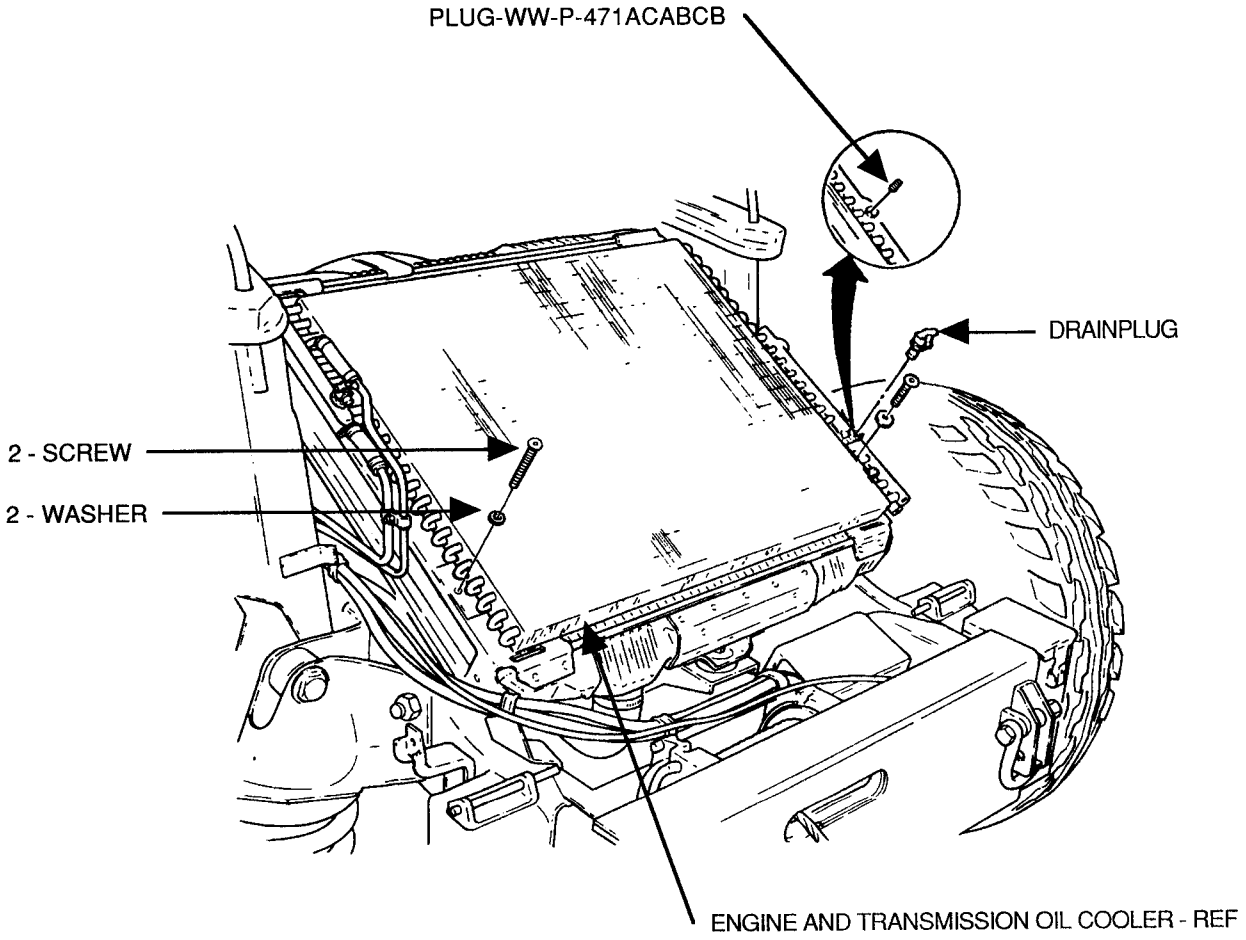
PLUG-WW-P-471ACABCB
DRAINPLUG
2 - SCREW
2 - WASHER
ENGINE AND TRANSMISSION OIL COOLER - REF

FIGURE 1

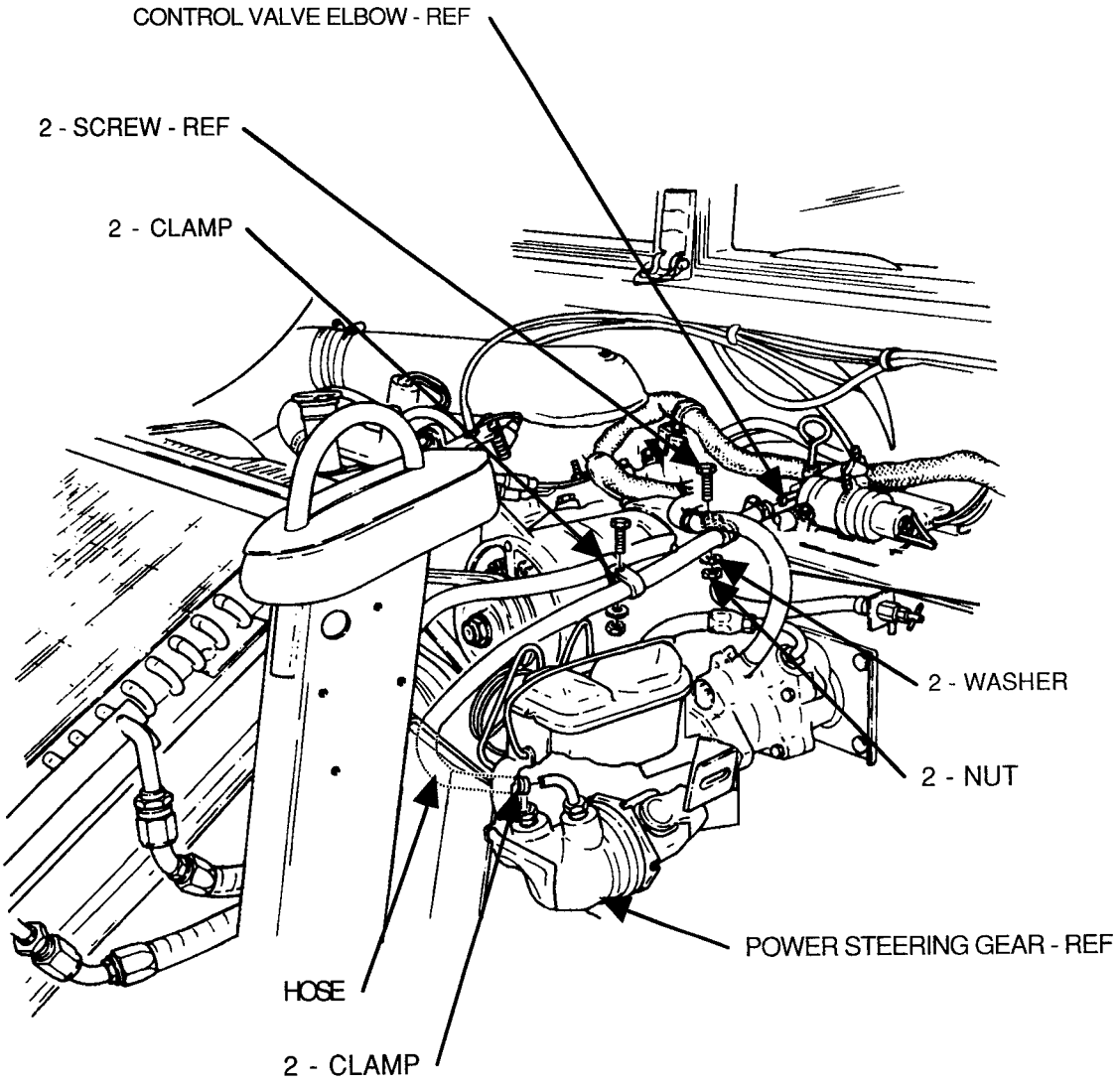
CONTROL VALVE ELBOW - REF
2 - SCREW - REF
2 - CLAMP
2 - WASHER
2 - NUT
POWER STEERING GEAR - REF
HOSE
2 - CLAMP

FIGURE 2

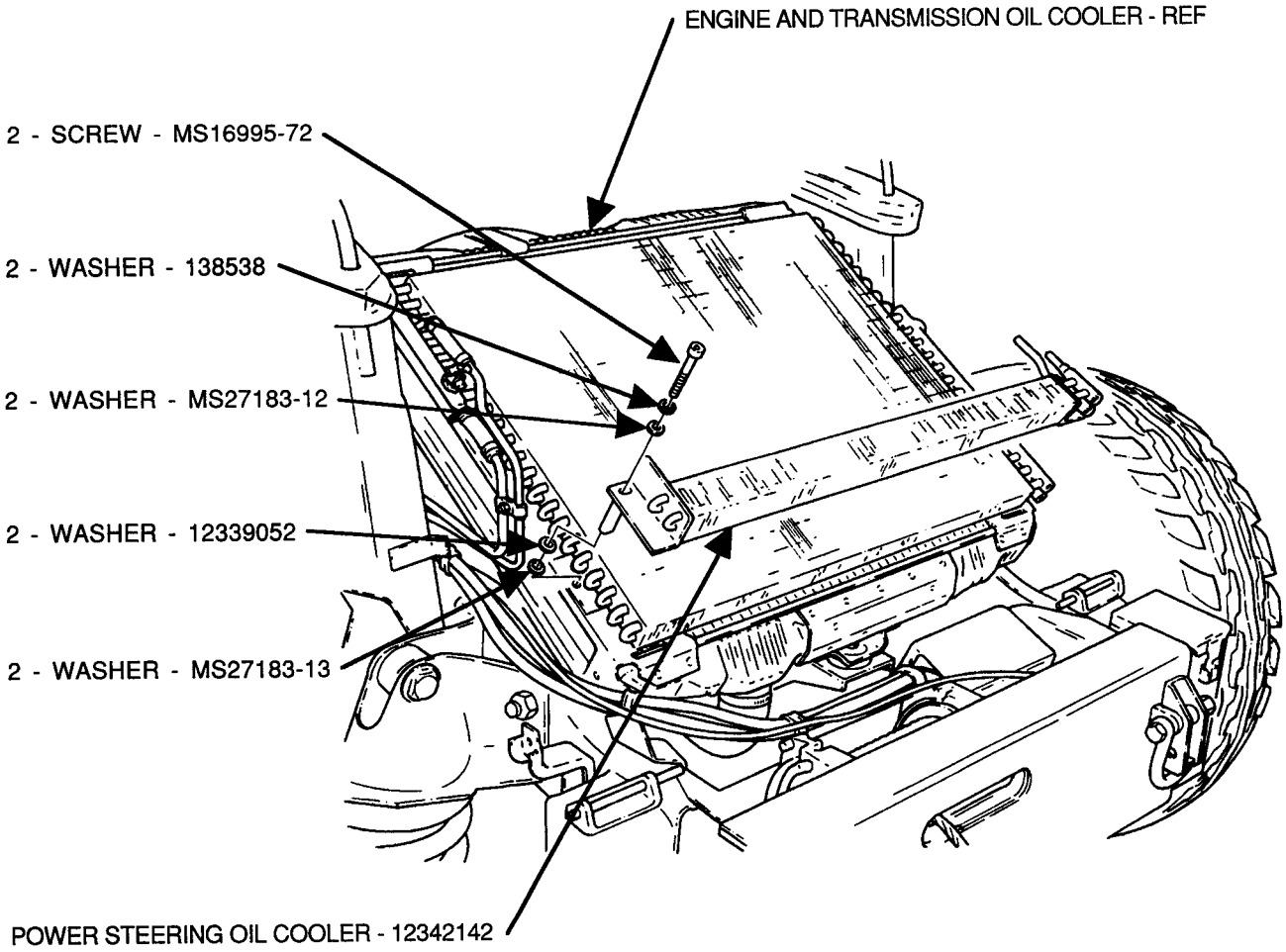
ENGINE AND TRANSMISSION OIL COOLER - REF
2 - SCREW - MS16995-72
2 - WASHER - 138538
2 - WASHER - MS27183-12
2 - WASHER - 12339052
2 - WASHER - MS27183-13
POWER STEERING OIL COOLER - 12342142

FIGURE 3

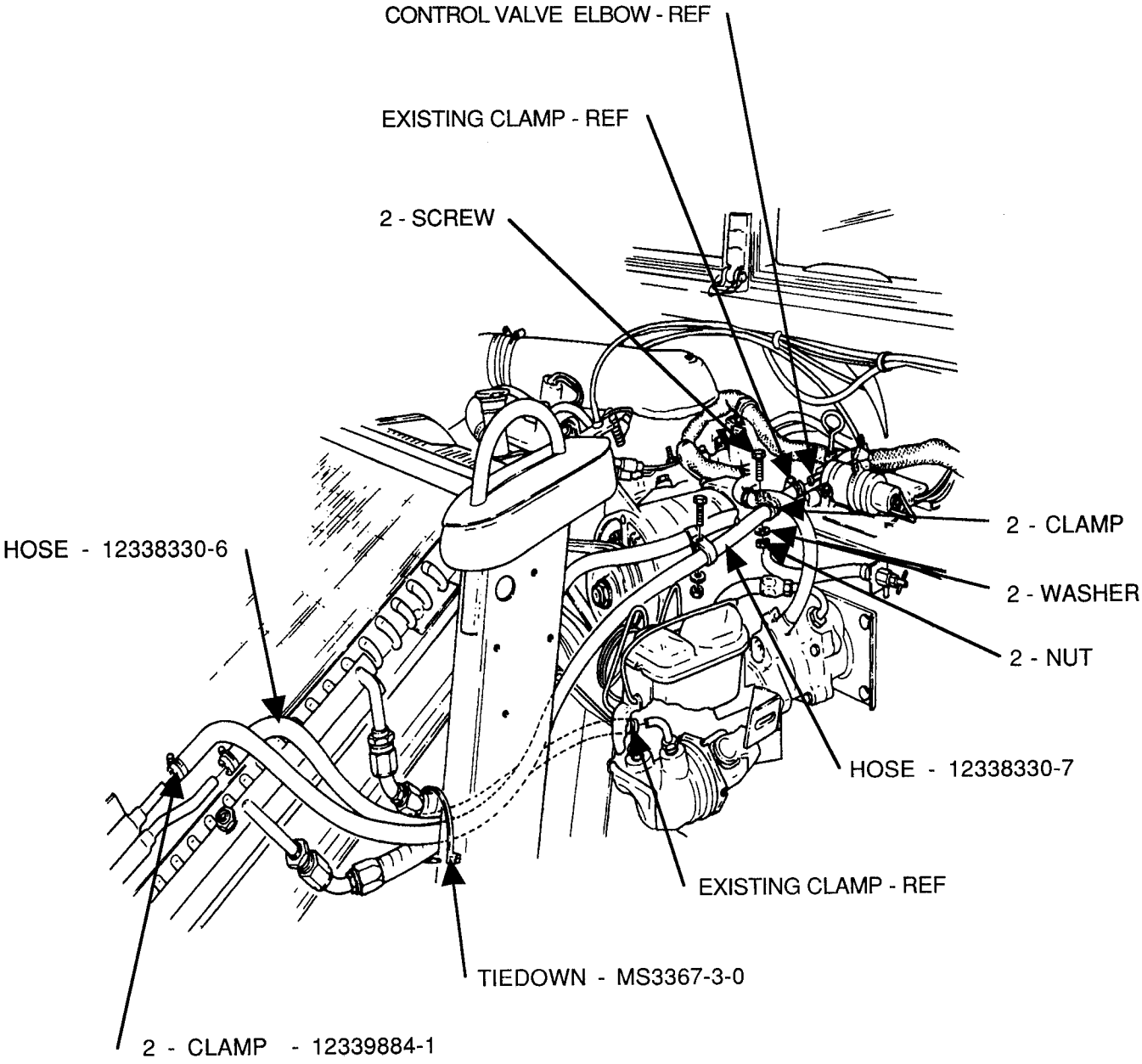
CONTROL VALVE ELBOW - REF
EXISTING CLAMP - REF
2 - SCREW
2 - CLAMP
2 - WASHER
2 - NUT
HOSE - 12338330-6
HOSE - 12338330-7
EXISTING CLAMP - REF
TIEDOWN - MS3367-3-0
2 - CLAMP - 12339884-1

FIGURE 4

By Order of the Secretary of the Army:

GORDON R. SULLIVAN
General, United States Army
Chief of Staff

Official:

MILTON H. HAMILTON
Administrative Assistant to the
Secretary of the Army
02035

Distribution:

To be distributed in accordance with DA Form 12–38–E, Block No. 0922, Unit maintenance requirements for MWO 9–2320–280–20–1.

☆ U.S. GOVERNMENT PRINTING OFFICE: 1992 643-016/60137