August 13, 2004 3:38 PM

SUGGESTED SOURCE(S) OF SUPPLY	
VENDOR PART NO.	VENDOR
UK-3	OSCAR GOSSLER KG BORSIGSTRASSE 4-6 2057 REINBEK GERMANY CAGE CODE D1097

REVISIONS				
ZONE	LTR	DESCRIPTION	DATE	APPROVED
	B	REDRAWN WITH CHANGE. SEE ECP NO. 94HE3213	94-10-14	ADS

CAD MAINTAINED. CHANGES SHALL BE INCORPORATED BY THE DESIGN ACTIVITY.

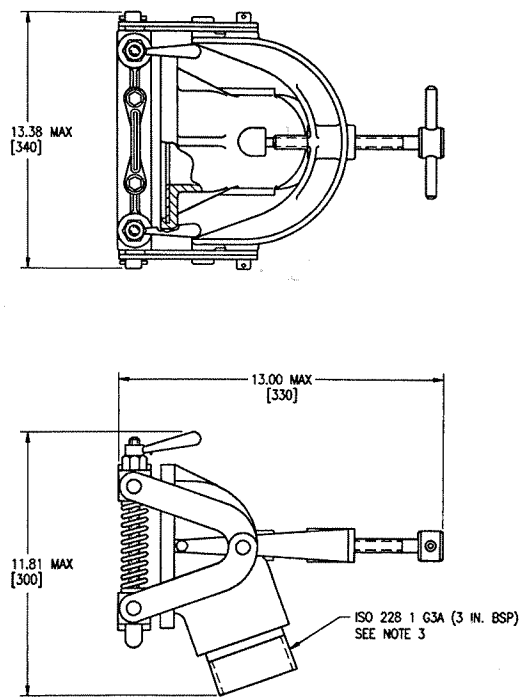

NOTES:

1. CLAMPING DEVICE SHALL BE SUITABLE TO FIT PIPES FROM 80mm TO 140mm (3.15 IN. TO 5.51 IN.) OUTSIDE DIAMETER.
2. MATERIAL:
   ELBOW: ALUMINUM ALLOY 6061-T6 OR 356-T6
   GASKET: POLYURETHANE OR NITRILE
   OTHER PARTS: STEEL OR DUCTILE IRON, CADMIUM PLATED

(M101) 3. THREAD SHALL BE IN ACCORDANCE WITH INTERNATIONAL STANDARD ISO 228/1.

(M102) 4. THE COUPLING SHALL WITHSTAND A HYDROSTATIC TEST PRESSURE OF 225 PSIG FOR 5 MINUTES WITHOUT ANY EVIDENCE OF LEAKAGE OR DEFORMATION.
WORKING PRESSURE: 150 PSI MAX.
SAMPLING SHALL BE IN ACCORDANCE WITH NOTE 7.

5. MARKING SHALL BE IN ACCORDANCE WITH MIL-STD-130, METHOD OPTIONAL.
6. IDENTIFICATION OF THE SUGGESTED SOURCE(S) OF SUPPLY HEREON IS NOT TO BE CONSTRUED AS A GUARANTEE OF PRESENT OR CONTINUED AVAILABILITY AS A SOURCE OF SUPPLY FOR THE ITEM(S).
7. QUALITY ASSURANCE PROVISIONS:
   THESE REQUIREMENTS APPLY WHEN THIS PART IS PROCURED AS A REPAIR PART.
   A. INSPECTION FOR CRITICAL CHARACTERISTICS SHALL BE 100 PERCENT OF THE LOT QUANTITY. SAMPLE SIZE FOR MAJOR CHARACTERISTICS SHALL BE DETERMINED BY USING MIL-STD-105, TABLE I AND TABLE II-A. A LOT SHALL BE ACCEPTED WHEN 0 DEFECTS ARE FOUND IN THE SAMPLE, AND REJECTED WHEN 1 OR MORE DEFECTS ARE FOUND IN THE SAMPLE.
   B. CLASSIFICATION OF CHARACTERISTICS:
      CRITICAL - NONE
      MAJOR - M101-M102
   C. ALL OTHER CHARACTERISTICS ARE SUBJECT TO INSPECTION UNDER THE CONTRACTOR'S QUALITY OR INSPECTION SYSTEM.
8. DIMENSIONS IN BRACKETS ARE MILLIMETERS.

DISTRIBUTION STATEMENT A.
APPROVED FOR PUBLIC RELEASE;
DISTRIBUTION IS UNLIMITED.

SPECIFICATION CONTROL DRAWING

UNLESS OTHERWISE SPECIFIED DIM/TOLERANCES ARE: mm, IN. ONE PLACE (.X) ± — TWO PLACE (.XX) ± — THREE PLACE (.XXX) ± — ANGLES ± — THIRD ANGLE PROJECTION	DRAWN BY RDF/RJB DATE 1 FEB 88 CHECKED BY QCHWB FEA 22 JUN 88	U.S. ARMY BELVOIR RESEARCH, DEVELOPMENT, AND ENGINEERING CENTER FORT BELVOIR, VIRGINIA 22060-5606
FOR INTERPRETATION OF DRAWING DOD-STD-100 APPLIES REMOVE BURRS AND BREAK SHARP EDGES — SHARP EDGES — TO — FILLET RADII — TO —	CONTRACT NO. 2R341 DAAK70-92-D-0004 DESIGN APPROVAL CHITTA R DAS DATE 18 MAY 1989	COUPLING, RAIL TANKER, NATO
MATERIAL	APPROVED FOR PROCUREMENT LEONARD JOHNSON PE DATE 18 MAY 1989	SIZE A1 CAGE CODE 97403 DWG NO. 13222E8219 SCALE NONE SHEET 1 OF 1