Revisions

LTR	Description	Date (YY-MM-DD)	Approved
---	Initial Release Direct ERR FOM U6466	01-12-07	*T. A. Higgins*
A	Direct ERR FOM U8332 Incorporated ADCN 157519	03-04-30	*T. A. Higgins*

Acknowledgment

This code is based on commercial and military specifications; primarily ANSI/AWS B2.1, ANSI/AWS D1.1, MIL-STD 1941 and MIL-STD 1261.

This document was prepared by a team from United Defense, L.P., Ground Systems Division (UDLP) and the U.S. Army's Tank-Automotive Armament Research, Development and Engineering Center (TARDEC).

Design Activity

U.S. Army Tank-Automotive and Armaments Command

Warren, Michigan 48397-6000

Ground Combat Vehicle Welding Code - Steel

Design Approval	TARDEC/UDLP Weld Team				
Drawn	Date	Drawing Approval	Size	Cage Code	12479550
Richard J. Rush	01/12/06	*Tom Altobelli*	A	19207	

Distribution A

IMPORTANT

This document contains "hot links" that will allow quick searches and access to information. The mouse pointer is a "grabber hand" in this document. It changes to a pointing finger whenever you scan over a word or phrase that is linked to text, a figure, or a table somewhere else in this document. Notice, as you scan over a page the pointer will change back and forth between the grabber hand and the pointing finger. Click the mouse to move to the linked site. In addition, the hot links are blue.

After you have jumped to a linked site, you easily return to the location you clicked from by clicking on the double return arrows

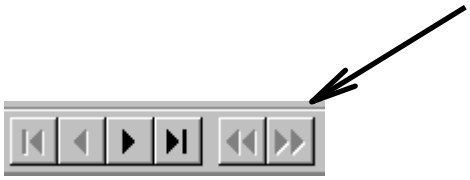

Preface

Introduction

This document follows the AWS format, and is based on current practice in the manufacture of ground combat vehicles. The section that normally would be included to establish design standards has been eliminated from this code. This follows the practice within this industry of having design performed by structural design engineers using the latest in finite element analysis.

This code is divided into seven sections and five appendices.

Revisions

This code and all revisions will be electronically maintained. Signed original copy of document located at AMSTA-TR-E/ART.

Recommendations for change must be submitted in writing to U.S. Army Tank-Automotive and Armament Research, Development and Engineering Center (TARDEC), Attention AMSTA-TR-E/MEPS. Consensus of the standing Weld Team is required for revisions to this code.

Specification Cross Reference

A table is included on page 4 to provide a cross-reference between this code and military standards and specifications (active and cancelled).

TARDEC/UDLP Weld Team

Charter Members

- Michael W. Davis – UDLP
- Steven W. Taylor – UDLP
- Richard J. Rush – UDLP
- David Berridge – UDLP
- Marvin Kohn - UDLP
- Terry A. Higgins – TARDEC
- Joe B. Regmont – TARDEC
- Lucien A. Vita – TACOM/ARDEC
- Claude Braafladt - UDLP

Table P.1
Cross Reference Table

Topic	Applicable References
Stud Welding	MIL-STD-1261, Classes 1, 2 and 3
Non Critical Welds	AWS D1.1 Statically Loaded Welds MIL-STD-1261, Class 1 MIL-STD-248
Critical Welds	MIL-STD-1261, Class 2 AWS D1.1 Cyclically Loaded Welds MIL-STD-1941, Attachments to Armor MIL-STD-1185, Attachments to Armor MIL-STD-1261, Class 3 MIL-STD-2219, classes A & B MIL-STD-248
Ballistic Welds	MIL-STD-1941 MIL-W-46086 MIL-STD-1185

TABLE OF CONTENTS

Preface **3**

Introduction **3**

Revisions **3**

Specification Cross Reference **3**

TARDEC/UDLP Weld Team **3**

Charter Members **3**

1 General Requirements **16**

1.1 Scope **16**
Appendices 16
1.1.1 Application 16
1.1.2 Limitations 16

1.2 Approval **16**

1.3 Definitions **17**
1.4 Welding Symbols 17
1.5 Equipment Calibration 17
1.6 Safety Precautions 17
1.7 Standard Units of Measurement 17

2 Design of Welded Connections **18**

2.1 Intended Use **18**

3 Prequalification of WPSs **20**

3.1 Scope **20**

3.2 Welding Processes **20**
3.2.1 Prequalified Processes 20
3.2.2 Other Welding Processes. 20

3.3 Base Metal/Filler Metal Combinations **20**

3.4 Minimum Preheat and Interpass Temperature Requirements **20**
3.4.1 Base Metal/Thickness Combination 20
3.4.2 Alternate SAW Preheat and Interpass Temperatures 20
3.4.2.1 Hardness Requirements *23*

3.5 Limitation of WPS Variables **23**
3.5.1 Combination of WPSs 23

3.6 General WPS Requirements **23**
3.6.1 Vertical-Up Welding Requirements 23
3.6.2 Width/Depth Pass Limitation 23

3.7 Common Requirements of Partial and Complete Joint Penetration Groove and Fillet Welds **23**
3.7.1 FCAW/GMAW in SMAW Joints 23
3.7.2 Corner Joint Preparation 23
3.7.3 Root Openings 23
3.7.4 Skewed T Joints 23

3.8 Partial Joint Penetration Requirements ... 26
3.8.1 Definition. ... 26
3.8.2 Details (Tubular) ... 26

3.9 Complete Joint Penetration Groove Weld Requirements ... 26
3.9.1 J- and U-Groove Preparation ... 26
3.9.2 Tubular Butt Joints ... 26
3.9.3 Tubular T-, Y-, and K-Connections ... 26

4 Qualification ... 28

4.0 Scope ... 28

4.1 General ... 28
4.1.1 Procedure Qualification Record (PQR) ... 28
4.1.1.1 Impact Test Requirements ... 28
4.1.2 Welding Procedure Specification (WPS) ... 28
4.1.3 Qualification of Welding Procedures ... 28
4.1.4 Qualification of Welders, Welding Operators, Tack Welders, and Robotic Applications ... 29

4.2 Common Requirements for WPS and Welding Personnel Performance Qualificatio ... 29
4.2.1 Qualification Responsibility ... 29
4.2.2 Qualification to Other Codes or Standards ... 29
4.2.3 Aging ... 29
4.2.4 Records ... 29
4.2.5 Positions of Welds ... 29

4.3 General ... 34

4.4 Qualification Thickness Limitations ... 35

4.5 Qualification Position Limitations ... 38

4.6 Methods of Testing and Acceptance Criteria ... 38

4.7 Special Test Weldment Acceptance Criteria ... 38

4.8 Groove Test Weldments and Acceptance Criteria ... 38

4.9 Fillet Test Weldments and Acceptance Criteria ... 41

4.10 Cladding Test Weldment and Acceptance Criteria ... 43

4.11 Hardfacing Test Weldment and Acceptance Criteria ... 44

4.12 Sheet Metal Weldments and Acceptance Criteria ... 46

4.13 Welding Procedure Specification Data ... 46
4.13.1 Joint Design ... 47
4.13.2 Base Metal ... 47
4.13.3 Filler Metal ... 47
4.13.4 Position ... 47
4.13.5 Preheat and Interpass ... 47
4.13.6 Heat Treatment ... 47
4.13.7 Shielding Gas ... 47
4.13.8 Electrical ... 47
4.13.9 Variables (see 4.14.9) ... 47

4.14 Procedure Qualification Variables ... 48
4.14.1 Joint Design ... 48
4.14.2 Base Metal ... 48
4.14.3 Filler Metals ... 48
4.14.4 Position ... 49

4.14.5 Preheat and Interpass Temperature ... 49
4.14.6 Post Weld Heat Treatment ... 50
1) Omission or inclusion of PWHT ... 50
4.14.7 Shielding Gas ... 50
4.14.8 Electrical Characteristics ... 50

4.15 General ... 51

4.16 Testing ... 51
4.16.4 Cladding ... 53
4.16.5 Hardfacing ... 54

4.17 Examination Procedures and Acceptance Criteria ... 55
4.17.1 Visual Examination ... 55
4.17.1.1 Test Weldments ... 55
4.17.2 Radiographic Examination ... 55
4.17.3 Bend Tests ... 55
4.17.4 Fillet-Weld Bend-Break Tests ... 56
4.17.5 Macro Examination ... 56

4.18 Performance Qualification Variables ... 57
4.18.1.1 Welders ... 57
4.18.1.2 Welding Operator ... 57

5 Fabrication ... 64

5.1 Scope ... 64

5.2 Base Metal ... 64
5.2.1 Specified Base Metal ... 64
5.2.2 Base Metal for Weld Tabs, Backing, and Spacers ... 64
5.2.2.1 Weld Tabs ... 64
5.2.2.2 Backing ... 64
5.2.2.3 Spacers ... 64

5.3 Welding Consumables and Electrode Requirements ... 64
5.3.1 General ... 64
5.3.1.1 Certification for Electrodes or Electrode-Flux Combinations ... 64
5.3.1.2 Suitability of Classification ... 64
5.3.1.3 Shielding Gas ... 64
5.3.1.4 Storage ... 64
5.3.1.5 Electrode Condition ... 64
5.3.2 SMAW Electrodes ... 64
5.3.2.1 SMAW Electrode Storage Conditions ... 65
5.3.2.2 Approved Atmospheric Time Periods ... 65
5.3.2.3 Rebaking Electrodes ... 65
5.3.2.4 Electrode Restrictions for ASTM A514 or A517 Steels ... 65
5.3.3 SAW Electrodes and Fluxes ... 65
5.3.3.1 Electrode-Flux Combination Requirements ... 65
5.3.3.2 Condition of Flux ... 66
5.3.3.3 Flux Reclamation ... 66
5.3.4 GMAW/FCAW Electrodes ... 66
5.3.4.1 Low-Alloy Electrodes for GMAW ... 66
5.3.4.2 Low-Alloy Electrodes for FCAW ... 66
5.3.5 GTAW ... 66
5.5.5.1 Tungsten Electrodes ... 66
5.3.5.2 Filler Metal ... 66

5.4 WPS Variables ... 66

5.5 Preheat and Interpass Temperatures ... 66

5.6 Backing, Backing Gas, or Inserts ... 67

5.7 Backing ... 67
5.7.1 Fusion. ... 67
5.7.2 Full Length Backing. ... 67
5.7.3 Backing Thickness. ... 67

5.8 Welding Environment ... 67
5.8.1 Maximum Wind Velocity ... 67
5.8.2 Minimum Ambient Temperature ... 67

5.9 Compliance with Design ... 67

5.10 Preparation of Base Metal ... 67

5.11 Tack Welds ... 67
5.11.1 General Requirements for Tack Welds. ... 67
5.11.2 Incorporated Tack Welds ... 67
5.11.2.1 Additional Requirements for Tack Welds Incorporated in SAW Welds ... 67
5.11.2.2 Unincorporated Tack Welds ... 68

5.12 Control of Distortion and Shrinkage ... 68
5.12.1 Procedure and Sequence ... 68
5.12.2 Sequencing ... 68
5.12.3 Minimized Restraint. ... 68
5.12.4 Temperature Limitations. ... 68

5.13 Fillet Weld Assembly ... 68

5.14 Technique for Plug and Slot Welds ... 68
5.14.1 Plug Welds ... 68
5.14.1.1 Flat Position ... 68
5.14.1.2 Vertical Position. ... 68
5.14.1.3 Overhead Position ... 68
5.14.2 Slot Welds ... 68

5.15 Rework/Repairs ... 68
5.15.2.1 Overlap or Excessive Convexity ... 69
5.15.2.2 Excessive Concavity of Weld or Crater, Under-size Welds, Undercutting ... 69
5.15.2.3 Excessive Weld Porosity or Incomplete Fusion ... 69
5.15.2.4 Cracks in Welds ... 69

5.16 Peening ... 69
5.16.1 Tools ... 69

5.17 Caulking ... 69

5.18 Arc Strikes ... 69

5.19 Weld Cleaning ... 69
5.19.1 In-Process Cleaning ... 69
5.19.2 Cleaning of Completed Welds. ... 69

6 Inspection ... 70

6.1 General ... 70
6.1.3 Inspector Qualification ... 70

6.2 Inspection of Welding Procedure Specification and Equipment ... 70

6.3 Inspection of Welder, Welding Operator, and Tack Welder Qualifications ... 70

6.4 Inspection of Work and Records ... 71

6.5 Obligations of the Contractor 71

6.6 Nondestructive Testing 71
6.6.1 Non-Critical Welds 71
6.6.2 Critical Welds 71
6.6.3 Ballistic Welds 72
6.6.4 Procedures 72
6.6.4.1 Radiographic Testing 72
6.6.4.2 Radiation Imaging Systems. 72
6.6.4.3 Ultrasonic Testing. 72
6.6.4.4 Magnetic-Particle Testing. 72
6.6.4.5 Dye Penetrant Testing. 72
6.6.5 Personnel Qualification 72

6.7 General 74

6.8 Extent of Testing 74

6.9 Radiographic Procedures 74
6.9.10 Quality of Radiographs. 76
6.9.11 Density Limitations. 76

6.10 Acceptability of Welds 77

6.11 Examination, Report, and Disposition of Radiographs 77

6.12 General 78
6.12.1 Visual 78
6.12.2 Liquid Penetrant and Magnetic-Particle 78
6.12.3. Radiographic 78
6.12.4 Ultrasonic 78

7 Stud Welding 80

7.1 Scope 80

7.2 Workmanship 80
7.2.1 Cleanliness 80
7.2.2 Coating Restrictions 80
7.2.3 Base-Metal Preparation 80
7.2.4 Moisture. 80
7.2.5 Ferrule Condition 80
7.2.6 Arc Shield Removal 80
7.2.7 Acceptance Criteria 80

7.3 Technique 80
7.3.1 Automatic Machine Welding 80
7.3.2 GTAW, GMAW, SMAW Fillet Weld Option. 80
7.3.2.1 Surfaces 80
7.3.2.2 Stud End 80
7.3.2.3 Stud Fit (Fillet Welds) 80
7.3.2.4 Fillet Weld Minimum Size 81

7.4 Stud Application Qualification Requirements 81
7.4.1 Responsibilities for Tests 81
7.4.2 Preparation of Specimens 81
7.4.2.1 Test Specimens 81
7.4.3 Number of Specimens 81
7.4.4 Test Required 81
7.4.5 Test Methods 81
7.4.5.1 Bend Test 81

7.4.5.2 Torque Test ... *81*
7.4.5.3 Tension Test. ... *82*
7.4.6 Qualification Test Data ... 82

7.5 Production Control ... 82
7.5.1 Pre-Production Testing ... 82
7.5.1.1 Start of Shift ... *82*
7.5.1.2 Production Member Option ... *82*
7.5.1.3 Flash Requirement ... *82*
7.5.1.4 Bending/Torque Test ... *82*
7.5.1.5 Event of Failure ... *82*
7.5.2 Production Welding ... 82
7.5.3 Repair of Studs ... 82
7.5.4 Operator Qualification ... 82
7.5.5 Removal Area Repair ... 83

APPENDICES ... 84

Appendix A Code Approved Base Metals and Filler Metals Requiring Qualification per Section 4 ... 86

Appendix B Welding of Armor Steel ... 102

B1 INTRODUCTION ... 104
B1.1 Application ... 104
B1.2 Base Metal ... 104

B2 REFERENCED DOCUMENTS ... 104
B2.1 Issues of Documents ... 104
B2.1.1 Military Documents ... 104
B2.1.2 Other Publications ... 104
B2.1.2.1 American Society for Testing And Materials (ASTM) ... *104*
B2.1.2.2 American Welding Society (AWS) ... *104*
B2.1.2.3 American National Standards Institute (ANSI) ... *104*

B3 REQUIREMENTS ... 105
B3.1 Weldments ... 105
B3.2 Armor ... 105
B3.3 Preparation of Welding Procedures and Drawings ... 105
B3.4 Welders or Welding Operator ... 105
B3.4.1 Test Plate Requirements ... *105*
B3.4.2 Test Plate Acceptance ... *105*
B3.5 Ballistic Requirements ... 105
B3.5.1 Heating of Weldments ... *105*
B3.5.2 Welding Attachments to Armor ... *105*
B3.6 Ballistic Test Plates ... 105
B3.6.1 Submission ... *105*
B3.6.2 Macro Specimens ... *106*
B3.7 Ballistic Testing Requirements ... 106
B3.7.1 Test Plates ... *106*
B3.7.2 Number of Test Plates ... *106*
B3.7.3 Fabrication of Test Plates ... *106*
B3.7.4 Ballistic Test Requirements ... *110*
B3.7.5 Ballistic Testing ... *110*
B3.7.6 Test Method ... *110*
B3.7.7 Evaluation of Test Results ... 111
B3.7.8 Visual Examination of Test Plates ... *112*
B3.7.9 Radiographic Inspection of the Test Plate ... *112*
B3.7.10 Repair of Test Plate ... *112*

B3.7.11 Rejection of Ballistic Test Plate *112*
B3.7.12 Retests *112*
B3.8 Radiographic Procedure 112
B3.8.1 Radiographic Drawings *112*
B3.8.2 First Production Weldment *113*
B3.9 Inspection of Production Weldments 113
B3.9.1 Visual Inspection 113
B3.9.2 Radiographic Inspection 113
B3.9.3 Alternative Testing *113*
B3.9.4 Inspection of Weldments Subjected to Straightening *114*
B3.9.5 Marking of Repairs to Weldments *114*
B3.9.6 Quality Control *114*

Appendix C Forms 116

Appendix D Illustrations — Stud Weld Positions, Weld Test Specimens and Test Fixtures 128

D1 Standard Stud Test Weldment Positions 130

D2 Guided Bend Specimens 130
D2.1 Preparation of Groove weld Specimens 130
D2.3 Subsize Transverse Face and Root Bends 130
D2.4 Nonstandard Bend Specimens 130

D3 Tension Specimens 130

D4 Cladding and Hardfacing Specimens 130

D5 Test Fixtures 130

Appendix E Prequalified Joint Preparations and Joint Details 144

This page intentionally blank

LIST OF FIGURES

Figure 3.1 Weld Bead in which Depth and Width Exceed the Width of the Weld Face (see 3.6.2) 26
Figure 4.1 — Positions of Groove Welds (see 4.2.5) 30
Figure 4.2 — Positions of Fillet Welds (see 4.2.5) 31
Figure 4.3 — Position of Test Plates for Groove Welds (see 4.2.5)..... 32
Figure 4.4 — Position of Test Plates for Fillet Welds (see 4.2.5)..... 32
Figure 4.5 — Position of Test Plate for Groove Welds (see 4.2.5) 33
Figure 4.6 — Position for Test Pipes for Fillet Welds (see 4.2.5)..... 34
Figure 4.7 — Tubular Butt Joint — Welder or WPS Qualification — without Backing (see Table 4.5)..... 39
Figure 4.8 — Tubular Butt Joint — Welder or WPS Qualification — with Backing (see Table 4.5)..... 40
Figure 4.9 — Location of Groove Weld Test Specimens — Pipe and Tube (see 4.8.1)..... 41
Figure 4.10 — Location of Tension, Longitudinal Bend, and Toughness Specimens — Sheet and Plate (see 4.8.1)..... 42
Figure 4.11 — Location of Tension, Toughness, and Transverse Bend Specimens — Plate and Sheet (see 4.8.1)..... 43
Figure 4.12 — Location of Fillet Weld Shear and Macroetch Test Specimens (see 4.9.4 and 4.9.6) 44
Figure 4.13 — Fillet Weld Bend-Break and Macroetch Test Specimens (see 4.9.4 and 4.9.5)..... 45
Figure 4.14 — Location of Cladding Test Specimens (see 4.10.1)..... 45
Figure 4.15 — Location of Hardfacing Test Specimens (see 4.11.1)..... 46
Figure 4.16 — Location of 1G, 2G, 5G, and 6G Bend Specimens —Pipe Groove Weldment (see 4.16.3) . 55
Figure 4.17 — Location of Bend Specimens — Combined Positions 2G and 5G (see 4.16.3)..... 56
Figure 4.18 — Location of Transverse Bend Specimens — Plate Groove Weldment (see 4.16.3) 57
Figure 4.19 — Location of Longitudinal Bend Specimens — Plate Groove Weldment (see 4.16.3)..... 58
Figure 4.20 — Location of Fillet Test Specimens — Plate (see 4.16.3)..... 59
Figure 4.21 — Location of Fillet Test Specimens — Alternate Weldment — Plate (see 4.16.3) 59
Figure 4.22 — Location of Fillet Test Specimens — Pipe (see 4.16.3)..... 59
Figure 4.23 — Location of Fillet Test Specimens — Alternate Weld — Pipe (see 4.16.3) 60
Figure 4.24 — Location of Cladding Specimens — Plate (see 4.16.3)..... 60
Figure 4.25 — Location of Test Specimen — Hardfacing Test Weldment — Plate (see 4.16.3) 61
Figure 6.1 — Radiographic Identification and Penetrameter Locations on Approximately Equal Thickness Joints (see 6.9.7) 75
Figure 6.2 — Radiographic Identification and Locations on Transitions Joints (see 6.9.7) 76
Figure 6.3 — Penetrameter Design (see 6.9.7)..... 77
Figure 7.1 — Torque Testing Arrangement and Table of Testing Torques (see 7.4.5.2) 81
Figure B3.1 — Specimen for Ballistic Armor Welder Qualification (see B3.4) 105
Figure B3.2 — Ballistic Test Plate (see B3.6.2 and B3.7.1)..... 106
Figure B3.3 — Examples of Weld Cracks That Can Occur From Projectile Impact, and Indication of Measurement of Total Weld Crack for Acceptance Purposes (See B3.7.5 and Table B3.2) 107
Figure B3.4 — Single Groove Welds (see B3.7.2)..... 108
Figure B3.5 — Type 3 Ballistic Joint (see B3.7.2)..... 108
Figure B3.6 — Type 4 Ballistic Joint (see B3.7.2)..... 108
Figure B3.7 — Type 5 Ballistic Joint (see B3.7.2)..... 109
Figure B3.8 — Type 6 Ballistic Joint (see B3.7.2)..... 109
Figure B3.9 — Type 7 Ballistic Joint (see B3.7.2)..... 110
Figure B3.10 — Type 10 Continuous Fillet Weld Ballistic Joint (see B3.7.2)..... 111
Figure D1.1 — Welding Positions — Stud Welds (see D1.1)..... 131
Figure D2.1 — Transverse Face and Root Bend Specimens (see D2.1) 132
Figure D2.2 — Longitudinal Face and Root Bend Specimens (see D2.1)..... 133
Figure D2.3 — Transverse Side Bend Specimens (see D2.1)..... 133
Figure D3.1 — Reduced Section Tension Specimen — Rectangular (see D3)..... 134
Figure D3.2 — Reduced Section Tension Specimen — Round (see D3)..... 135
Figure D3.3 — Alternate Tension Specimen for Pipe 3 in. O.D. or Less (see D3) 135
Figure D3.4 — Alternate Tension Specimen for Pipe 2 in. O.D. or Less (see D3) 136
Figure D4.1 — Weld Cladding Side Bend Specimen (see D4) 137
Figure D4.2 — Weld Cladding and Hardfacing Chemical Analysis Specimen (see D4)..... 137

Figure D5.1 — Guided Bend Fixture — Bottom Ejecting Type (see D5) 138
Figure D5.2 — Guided Bend Fixture — Bottom Type (see D5) 139
Figure D5.3 — Guided Bend Fixture — Wrap Around (see D5) 140
Figure D5.4 — Stud Weld Test Fixture (see D5) 141
Figure D5.5 — Stud Weld Torque Fixture (see D5) 141
Figure D5.6 — Stud Weld Tension Test Fixture (see D5) 142
Figure E.1 (Sheet 1) — Prequalified Partial Joint Preparation (PJP) Groove Welded Joint Details (see 3.8) Top — Single square-groove weld, butt joint Bottom — Double square-groove weld, butt joint 147
Figure E.1 (Sheet 2) — Prequalified Partial Joint Preparation (PJP) Groove Welded Joint Details (see 3.8) Top — Single V-groove weld, butt or corner joint Bottom — Double V-groove weld, butt joint 148
Figure E.1 (Sheet 3) — Prequalified Partial Joint Preparation (PJP) Groove Welded Joint Details (see 3.8) Top — Single-bevel-groove weld, butt, or T-, or corner joint Bottom — Double bevel-groove weld, butt, or T-, or corner joint 149
Figure E.1 (Sheet 4) — Prequalified Partial Joint Preparation (PJP) Groove Welded Joint Details (see 3.8) Top — Single U-groove weld, butt or corner joint Bottom — Double U-groove weld, butt joint..... 150
Figure E.1 (Sheet 5) — Prequalified Partial Joint Preparation (PJP) Groove Welded Joint Details (see 3.8) Single U-groove weld, butt, or T-, or corner joint..... 151
Figure E.1 (Sheet 6) — Prequalified Partial Joint Preparation (PJP) Groove Welded Joint Details (see 3.8) Double J-groove weld, butt, or T-, or corner joint 152
Figure E.1 (Sheet 7) — Prequalified Partial Joint Preparation (PJP) Groove Welded Joint Details (see 3.8) Flare bevel groove weld, butt or T- or corner joint..... 153
Figure E.2 (Sheet 1) — Prequalified Complete Joint Preparation (CJP) Groove Welded Joint Details (see 3.9) Top — Square-groove weld with backing, butt or corner joint Bottom — Square-groove weld without backing, butt joint 154
Figure E.2 (Sheet 2) — Prequalified Complete Joint Preparation (CJP) Groove Welded Joint Details (see 3.9) Top — Square-groove weld, T- or corner joint Bottom — Single-V-groove weld, butt joint 155
Figure E.2 (Sheet 3) — Prequalified Complete Joint Preparation (CJP) Groove Welded Joint Details (see 3.9) Top — Single V-groove weld, corner joint Bottom — Single-V-groove weld, butt joint 156
Figure E.2 (Sheet 4) — Prequalified Complete Joint Preparation (CJP) Groove Welded Joint Details (see 3.9) Top — Single-V-groove weld, corner joint Bottom — Double-V-groove weld, butt joint..... 157
Figure E.2 (Sheet 5) — Prequalified Complete Joint Preparation (CJP) Groove Welded Joint Details (see 3.9) Top — Double -V -groove weld, butt joint Bottom — Single-bevel-groove weld, butt joint..... 158
Figure E.2 (Sheet 6) — Prequalified Complete Joint Preparation (CJP) Groove Welded Joint Details (see 3.9) Top — Single-bevel-groove weld, T- or corner joint Bottom — Single-bevel-groove weld, butt joint 159
Figure E.2 (Sheet 7) — Prequalified Complete Joint Preparation (CJP) Groove Welded Joint Details (see 3.9) Top — Single-bevel-groove weld, T- or corner joint Bottom — Double-bevel-groove weld, butt, or T-, or corner joint 160
Figure E.2 (Sheet 8) — Prequalified Complete Joint Preparation (CJP) Groove Welded Joint Details (see 3.9) Top — Double-bevel-groove weld, butt joint Bottom — Double-bevel-groove weld, T-, or corner joint 161
Figure E.2 (Sheet 9) — Prequalified Complete Joint Preparation (CJP) Groove Welded Joint Details (see 3.9) Top — Single-U-groove weld, butt or corner joint Bottom — Double-U-groove weld, butt joint .. 162
Figure E.2 (Sheet 10) — Prequalified Complete Joint Preparation (CJP) Groove Welded Joint Details (see 3.9) Top — Single-J-groove weld, butt joint Bottom — Single-J-groove weld, T- or corner joint..... 163
Figure E.2 (Sheet 11) — Prequalified Complete Joint Preparation (CJP) Groove Welded Joint Details (see 3.9) Top — Double-J-groove weld, butt joint Bottom — Double-J-groove weld, T- or corner joint..... 164

LIST OF TABLES

Table P.1 Cross Reference Table 4
Table 3.1 21
Table 3.2 24
Table 3.3 Prequalified WPS Requirements[5] (See 3.6) 25
Table 4.1 Test Methods for Procedure Qualification (see 4.6) 36
Table 4.2 Thickness and Size Limitation for Fillet Welds for Procedure Qualification (see 4.4.1) 37
Table 4.3 Thickness Limitations of Plate, Sheet Metal, and Pipe for Groove Welds for Procedure Qualification (see 4.4.1) 37
Table 4.4 Thickness Limitations for Cladding and Hardfacing for Procedure Qualification (see 4.4.1) 38
Table 4.5 WPS Qualification — Production Welding Positions Qualified by Plate and Pipe Tests (see 4.5.1) 39
Table 4.6 Table 3.1 and Appendix A Steels Qualified by PQR Steels (see 4.3.8) 52
Table 4.7 Examination Requirements for Performance Qualification (see 4.15.8) 53
Table 4.8 Electrode Classification Groups (see 4.16.1) 53
Table 4.9 Allowable Base Metals for Performance Qualification (See 4.18.1.1) 53
Table 4.10 Welder Qualification[1] — Production Welding Positions Qualified by Plate and Tube Tests (see 4.16.2) 54
Table 4.11 Pipe Diameter and Thickness Limitations for Performance Qualification on Groove Weld (see 4.18.1.1) 61
Table 4.12 Plate Groove Weld Qualification Thickness Limitations for Performance Qualification (see 4.18.1.1) 62
Table 4.13 Pipe Fillet Weld Qualification Limitations or Performance Qualification (see 4.18.1.1) 62
Table 4.14 Sheet Metal Qualification Thickness Limitations for Performance Qualification (see 4.18.1.1) .. 62
Table 5.1 Permissible Atmospheric Exposure of Low-Hydrogen Electrodes (see 5.3.2.2 and 5.3.2.3) 65
Table 6.1 Visual Acceptance Criteria Matrix[1,2,3] for all material thicknesses (see 6.6) 73
Table 6.2 Penetrameter Requirements (see 6.9.1) 75
Table B3.1 Thickness of Ballistic Test Plates (see B3.7.1) 106
Table B3.2 Requirements for Ballistic Tests (see B3.7.6) 107
Table B3.3 Severity Level Requirements for Full-Penetration Welds (see B3.7.9) 114
Table B3.4 Ultrasonic Acceptance-Rejection Criteria (see B3.9.3) 115

1 General Requirements

1.1 Scope

This code contains welding requirements applicable to welding ground combat vehicles, other alloy structures and components. It is to be used in conjunction with appropriate complementary codes or specifications for materials design and construction. It is not intended to supplant codes developed for use in specialized fabrication, such as the ASME Boiler and Pressure Vessel Code, aerospace codes, or military specifications; it is appropriate for use in fabrication of ballistic and non-ballistic primary structures, supporting structures and appurtenances.

When conformance to the code is stipulated in contract documents, all provisions of this code shall be complied with, except for those provisions that contract documents specifically exempt.

The following is a summary of the code sections and appendices:

1. General Requirements — This section contains basic information on the scope and limitations of the code.

2. Design of Welded Connections — This section has been omitted. Responsibility for this section resides with the design agency.

3. Prequalification — This section contains the requirements for exempting a non-armor Welding Procedure Specification (WPS) from the qualification requirements of this code.

4. Qualification — This section contains the qualification requirements for non-armor WPSs and welding personnel (welders, welding operators and tack welders).

5. Fabrication — This section contains the requirements for the preparation, assembly and workmanship of welded steel structures.

6. Inspection — This section contains criteria for the qualifications and responsibilities of inspectors, acceptance criteria for production welds, and standard procedures for performing visual inspection and NDT (nondestructive testing)

7. Stud Welding — This section contains the requirement for the welding of studs.

Appendices

Appendix A — Code-Approved Base Materials. This appendix contains tables that cross-reference and group the base and filler material qualification requirements. Within the type/grade grouping, other materials not specifically listed, may also be used with this document with Engineering approval.

Appendix B — Welding of Armor Steel. This appendix contains the welding, testing, procedure qualification, and performance qualification requirements of armor steel.

Appendix C — Forms. This appendix contains applicable forms for procedure qualification, performance qualification, and armor welding data sheets.

Appendix D — Illustrations – Weld Positions, Test Specimens and Test Fixtures. This appendix contains illustrations displaying dimensional information related to test specimens and fixtures.

Appendix E — Prequalified Joint Details and Joint Preparations. This appendix contains the Prequalified WPS limitations.

1.1.1 Application

This code is intended to be used for the following:

- materials listed in Appendix A or other materials approved by Engineering as referenced in 1.1 Appendix A.
- steel materials qualified using procedures established in:
  - ASME Boiler and Pressure Vessel Code
  - AWS Codes
  - API Standards
  - Canadian Welding Bureau codes
- Note: All procedures qualified using the above listed standards and codes require UDLP review and approval.
- welding of armor steel. Any special requirements specified in Appendix B, “Welding of Armor Steel” supersedes any conflicting requirements found elsewhere in this document.

1.1.2 Limitations

This code is not intended to be used for pressure vessels or pressure piping.

1.2 Approval

All reference to a need for approval by the procuring activity or customer shall mean approval by the

Government, or the duly designated person who acts for and on behalf of the Government in all matters within the scope of this code.

In addition, where contractor approvals shall be required, the term contractor shall refer to the prime contractor

1.3 Definitions

The welding terms used in this code shall be interpreted in accordance with the definitions given in the latest edition of ANSI/AWS A3.0, Standard Welding Terms and Definitions.

Modified PQR – A PQR that has been developed from existing procedures qualified in accordance with a military standard or specification and grandfathered into an AWS PQR format.

Modified WPS – A WPS that has been created from a modified PQR(s) developed from an existing workmanship sample in accordance with a military standard or specification.

Skewed T-Joint – T-joint with a dihedral angle equal to or greater than 60 degrees. All T-joints less than 60 degrees shall be considered to be groove welds.

1.4 Welding Symbols

Welding symbols shall be those shown in the latest edition of ANSI/AWS A2.4, Symbols for Welding, Brazing, and Nondestructive Examination. Special conditions shall be fully explained by added notes or details.

1.5 Equipment Calibration

The manufacturer is required to develop and maintain a welding equipment calibration program. This program shall consist of, as a minimum, an annual comparison check of the machine output with instrumentation calibrated using standards traceable to the National Institute of Standards and Technology (NIST). The standard may be a load bank, voltmeter/ammeter, clamp-on meter, etc.

Machine output for amperage and voltage must be within ± 10% of full scale. Proper documentation and evidence of the implementation must be maintained and is subject to random audit. Location for calibration shall be as follows:

- GMAW/SAW/FCAW – At wire feeder
- GTAW/SMAW – At power supply
- All other processes – As close as practical to the welding process

1.6 Safety Precautions

Safety precautions shall conform to the latest edition of ANSI Z49.1, Safety in Welding, Cutting, and Allied Processes, published by the American Welding Society.

Note: This code may involve hazardous materials, operations, and equipment. The code does not purport to address all of the safety problems associated with its use. It is the responsibility of the user to establish appropriate safety and health practices. The user should determine the applicability of any regulatory limitations prior to use.

1.7 Standard Units of Measurement

Values in this code will normally be stated in U.S. customary units.

2 Design of Welded Connections

2.1 Intended Use

This document does not address the design of welded connections. The responsibility for the design and designation of weld criticality is a function of the appropriate design agency.

This page intentionally blank

3 Prequalification of WPSs

3.1 Scope

Prequalification of WPSs (Welding Procedure Specifications) shall be defined as exemption from the WPS qualification testing required in section 4. All prequalified WPSs shall be documented using the form found in Appendix C or an alternate form provided the same variables are addressed. In order for a WPS to be prequalified, conformance with all of the applicable provisions of section 3 shall be required. WPSs that do not conform to the requirements of section 3 may be qualified by tests in conformance with section 4. The use of a prequalified joint shall not exempt the contractor from using sound engineering judgment in determining the suitability of application of these joints to a welded assembly or connection.

Welders, welding operators and tack welders that use prequalified WPSs shall be qualified in conformance with section 4, Part C or those codes/standards listed in 1.1.1.

3.2 Welding Processes

3.2.1 Prequalified Processes

Shielded metal arc welding (SMAW), submerged arc welding (SAW), gas metal arc welding (GMAW) (except GMAW-S, short circuiting transfer and GMAW-P, pulse mode), and flux cored arc welding (FCAW) WPSs which conform to all of the provisions of section 3 shall be deemed as prequalified and are therefore approved for use without performing WPS qualification tests for the process.

3.2.2 Other Welding Processes.

Other welding processes not covered by 3.2.1 may be used, provided the WPSs are qualified by applicable tests as prescribed in section 4. In conjunction with the tests, the WPSs and limitation of essential variables applicable to the specific welding process shall be established by the contractor developing the WPS. The range of essential variables shall be based on documented evidence of experience with the process but may not exceed the limits specified in section 4. Any change in essential variables outside the range so established shall require requalification.

3.3 Base Metal/Filler Metal Combinations

Only base metals and filler metals listed in Table 3.1 and Appendix A Table M1 (Group 1,2,3) may be used in prequalified WPSs.

Reference engineering drawings to determine the filler metal strength requirements to match or undermatch base metal strength.

3.4 Minimum Preheat and Interpass Temperature Requirements

The preheat and interpass temperature shall be sufficient to prevent cracking. Table 3.2 shall be used to determine the minimum preheat and interpass temperatures. For all materials not listed in Table 3.2, preheat and interpass temperatures shall be established on a PQR and documented on a WPS. Preheat and interpass temperature limitations for armor steels are indicated in Appendix B.

3.4.1 Base Metal/Thickness Combination

The minimum preheat or interpass temperature applied to a joint composed of base metals with different minimum preheats from Table 3.2 (based on category and thickness) shall be the highest of these temperatures.

3.4.2 Alternate SAW Preheat and Interpass Temperatures

Preheat and interpass temperatures for parallel or multiple electrode SAW shall be selected in conformance with Table 3.2. For single-pass groove and fillet welds or combinations of base metals, preheat/interpass temperatures may be established which are sufficient to reduce the hardness in the heat-affected zones of the base metal to less than 215 Brinell hardness number for steel having a minimum specified tensile strength not exceeding 60,000 psi, and 265 Brinell hardness number for steel having a minimum specified tensile strength greater than 60 000, but not exceeding 70,000 psi.

Table 3.1
Prequalified Base Metal-Filler Metal Combinations for Matching Strength (see 3.3)

Group	Steel Specification Requirements				Filler Metal Requirements		
	Steel Specification[1,2]		Min.Yield Point/ Strength ksi	Tensile Range ksi	Electrode Specification[3,6]	Min. Yield Point/ Strength ksi	Tensile Strength Range ksi
	ASTM A36[4]		36	58-80			
	ASTM A53	Grade B	35	60 min			
	ASTM A106	Grade B	35	60 min	SMAW		
	ASTM A131	Grades A, B, CS, D, DS, E	34	58-71	AWS A5.1 or A5.5[7]		
	ASTM A139	Grade B	35	60 min	E60XX	50	62 min
	ASTM A381	Grade Y35	35	60 min	E70XX	60	72 min
	ASTM A500	Grade A	33	45 min	E70XX-X	57	70 min
		Grade B	42	58 min			
	ASTM A501		36	58 min	SAW		
	ASTM A516	Grade 55	30	55-75	AWS A5.17 or A5.23[7]		
		Grade 60	32	60-80	F6XX-EXXX	48	60-80
	ASTM A524	Grade I	35	60-85	F7XX-EXXX or	58	70-95
		Grade II	30	55-80	F7XX-EXX-XX		
I	ASTM A529		42	60-85			
	ASTM A570	Grade 30	30	49 min	GMAW		
		Grade 33	33	52 min	AWS A5.18		
		Grade 36	36	53 min	ER70S-X	60	72 min
		Grade 40	40	55 min			
		Grade 45	45	60 min			
		Grade 50	50	65 min			
	ASTM A573	Grade 65	35	65-77	FCAW		
		Grade 58	32	58-71	AWS A5.20		
	ASTM A709	Grade 364	36	58-80	E6XT-X	50	62 min
	API 5L	Grade B	35	60	E7XT-X 60	60	72 min
		Grade X42	42	60	(Except -2, -3, -10, -GS)		
	ABS	Grades A, B, D, CS, DS		58-71	AWS A5.29[7]		
		Grade E[5]		58-71	E7XTX-XX	58	70-90
	ASTM A131	Grades AH32, DH32, EH32	46	68-85	SMAW		
		Grades AH36, DH36, EH36	51	71-90	AWS A5.1 or A5.5[7]		
	ASTM A441		40-50	60-70	E7015, E7016	60	72 min
	ASTM A516	Grade 65	35	65-85	E7018, E7028		
		Grade 70	38	70-90	E7015-X, E7016-X	57	70 min
	ASTM A537	Class 1	45-50	65-90	E7018-X		
II	ASTM A572	Grade 42	42	60 min			
	ASTM A572	Grade 50	50	65 min			
	ASTM A588[5]	(4 in. and under)	50	70 min	SAW		
	ASTM A595	Grade A	55	65 min	AWS A5.17 or A5.23[7]		
		Grades B and C	60	70 min	F7XX-EXXX or F7XX-EXX-XX	58	70-95

Table 3.1 (continued)
Prequalified Base Metal-Filler Metal Combinations for Matching Strength (see 3.3)

Group	Steel Specification Requirements				Filler Metal Requirements		
	Steel Specification[1,2]		Min.Yield Point/ Strength ksi	Tensile Range ksi	Electrode Specification[3,6]	Min. Yield Point/ Strength ksi	Tensile Strength Range ksi
II	ASTM A606[5]		45-50	65 min			
	ASTM A607	Grade 45	45	60 min	GMAW AWS A5.18 ER70S-X	60	72 min
		Grade 50	50	65 min			
		Grade 55	55	70 min			
	ASTM A618	Grades Ib. II, III	46-50	65 min			
	ASTM A633	Grade A	42	63-83			
		Grades C, D (2-1/2 in. and under)	50	70-90	FCAW AWS A5.20		
	ASTM A709	Grade 50	50	65 min	E7XT-X (Except -2, -3, - 10, - GS) AWS A5.29[7]	60	72 min
		Grade 50W	50	70 min			
	ASTM A710	Grade A, Class 2 > 2 in.	55	65 min			
	ASTM A808	(2-1/2 in. and under)	42	60 min	E7XTX-X	58	70-90
	API 2H[6]	Grade 42	42	62-80			
		Grade 50	50	70 min			
	API 5L	Grade X52	52	66-72			
	ABS	Grades AH32, DH32, EH32	45.5	71-90			
		Grades AH36, DH36, EH36	51	71-90			
III					SMAW AWS A5.5[7] E8015-X, E8016-X E8018-X	67	80 min
	ASTM A572	Grade 60	60	75 min	SAW AWS A5.23[7] F8XX-EXX-XX	68	80-100
		Grade 65	65	80 min			
	ASTM A537	Class 2[5]	46-60	80-100	GMAW AWS A5.28[7] ER80S-X	68	80 min
	ASTM A633	Grade E[5]	55-60	75-100			
	ASTM A710	Grade A, Class 2 ≤ 2 in.	60-65	72 min			
	ASTM A710	Grade A, Class 3 > 2 in.	60-65	70 min	FCAW AWS A5.29[7] E8XTX-X	68	80-100

Notes:

1. In joints involving base metals of different groups, either of the following filler metals may be used: (1) that which match the higher strength base metal, or (2) that which matches the lower strength base metal and produces a low-hydrogen deposit. Preheating shall be in conformance with the requirements applicable to the higher strength group.
2. Match API standard 2B (fabricated tubes) according to steel used
3. When welds are to be stress-relieved, the deposited weld metal shall not exceed 0.05 percent vanadium.
4. Only low-hydrogen electrodes shall be used when welding A36 or A709 Grade 36 steel more than 1 in. thick
5. Special welding materials and WPS e.g., E80XX-X low-alloy electrodes) may be required to match the notch toughness of base metal (for applications involving impact loading or low temperature), or for atmospheric corrosion and weathering characteristics.
6. The designation of ER70S-1B has been reclassified as ER80S-D2 in A5.28-79. Prequalified WPSs prepared prior to 1981 and specifying AWS A5. 18, ER70S-1B, may now use AWS A5.28-79 ER80S-D2 when welding steels in Groups I and II.
7. Filler metals of alloy group B3, B3L, B4, B4L, B5, B5L, B6, B6L, B7, B7L, B8, B8L, or B9 in ANSI/AWS A5.5, A5.23, A5.28, or A5.29 are not prequalified for use in the as-welded condition

.

Note: The Brinell hardness number shall be determined in conformance with ASTM E10. If another method of hardness is to be used, the equivalent hardness number shall be determined from ASTM E140, and testing shall be performed according to the applicable ASTM specification.

3.4.2.1 Hardness Requirements

Hardness determination of the heat-affected zone will be made on the following:

- Initial macroetch cross sections of a sample test specimen.
- The surface of the member during the progress of the work. The surface shall be ground prior to hardness testing:

  (a) The frequency of such heat-affected zone testing shall be at least one test area per weldment of the thicker metal involved in a joint of each 50 ft. of groove welds or pair of fillet welds.

  (b) These hardness determinations may be discontinued after the procedure has been established to the satisfaction of the contractor.

3.5 Limitation of WPS Variables

All prequalified WPSs to be used shall be prepared by the manufacturer, fabricator, or contractor as written prequalified WPSs, and shall be available to those authorized to use or examine them. The written WPS may follow any convenient format (see Appendix C for examples). The welding parameters set forth in this subsection shall be specified on the written WPSs within the limitation of variables prescribed in 4.14 for each applicable process. Changes beyond those specified on the written WPS considered essential variables, shall require a new or revised prequalified written WPS.

3.5.1 Combination of WPSs

A combination of qualified and prequalified WPSs may be used without qualification of the combination, provided the limitation of essential variables applicable to each WPS is observed.

3.6 General WPS Requirements

All the requirements of Table 3.3 shall be met for prequalified WPSs.

3.6.1 Vertical-Up Welding Requirements

The progression for all passes in vertical position welding shall be upward, except that undercut may be repaired vertically downwards when preheat is in accordance with Table 3.2, but not lower than 70°F. However, when tubular products are welded, the progression of vertical welding may be upwards or downwards, but only in the direction(s) for which the welder is qualified.

3.6.2 Width/Depth Pass Limitation

Neither the depth nor the maximum width in the cross section of weld metal deposited in each weld pass shall exceed the width at the surface of the weld pass (see Figure 3.1).

3.7 Common Requirements of Partial and Complete Joint Penetration Groove and Fillet Welds

3.7.1 FCAW/GMAW in SMAW Joints

Groove preparations detailed for prequalified SMAW joints may be used for prequalified GMAW or FCAW.

3.7.2 Corner Joint Preparation

For corner joints, the outside groove preparation may be in either or both members, provided the basic groove configuration is not changed and adequate edge distance is maintained to support the welding operations without excessive melting.

3.7.3 Root Openings

Joint root openings without backing may vary as noted in Appendix E, however, for automatic or machine welding using FCAW, GMAW, and SAW processes, the maximum root opening variation (minimum to maximum opening as fit-up) may not exceed 1/4 in. Variations greater than 1/4 in. shall be locally corrected prior to automatic or machine welding.

3.7.4 Skewed T Joints

For skewed T joints, the dihedral angle must be 60° or greater. For joints with dihedral angles less than 60°, qualification is required per Section 4.

Table 3.2
Prequalified Minimum Preheat and Interpass Temperature[3] (See 3.4)

Category	Steel Specification				Welding Process	Thickness of Thickest Part at Point of Welding, in	Minimum Preheat and Interpass Temperature, °F
A	ASTM A36		ASTM A516		Shielded metal arc welding with other than low-hydrogen electrodes	1/8 to 3/4 incl.	None[1]
	ASTM A53	Grade B	ASTM A524	Grades I & II			
	ASTM A106	Grade B	ASTM A529			Over 3/4 thru 1-1/2 incl.	150
	ASTM A131	Grades A, B, CS, D, DS, E	ASTM A570 ASTM A573	All grades Grade 65			
	ASTM A139	Grade B	ASTM A709	Grade 36		Over 1-1/2 thru 2-1/2 incl.	225
	ASTM A381	Grade Y35	API 5L	Grade B Grade X42			
	ASTM A500	Grade A Grade B	ABS	Grades A, B, D, CS, DS			
	ASTM A501			Grade E		Over 2-1/2	300
B	ASTM A36		ASTM A570	All grades	Shielded metal arc welding with low-hydrogen electrodes, submerged arc welding[2], gas metal arc welding, flux cored arc welding	1/8 to 3/4 incl.	None[1]
	ASTM A53	Grade B	ASTM A572	Grades 42, 50			
	ASTM A106	Grade B	ASTM A573	Grade 65			
	ASTM A 131	Grades A, B, CS, D, DS, E AH 32 & 36 DH 32 & 36	ASTM A588 ASTM A595 ASTM A606 ASTM A607	Grades A, B, C Grades 45, 50, 55			
		EH 32 & 36	ASTM A618	Grades Ib, II,III			
	ASTM A139	Grade B	ASTM A633	Grades A, B Grades C, D		Over 3/4 thru 1-1/2 incl	50
	ASTM A381	Grade Y35	ASTM A709	Grades 36, 50, 50W			
			ASTM A808				
	ASTM A441		API 5L	Grade B			
	ASTM A500	Grade A Grade B		Grade X42			
			API Spec. 2H	Grades 42, 50		Over 1-1/2 thru 2-1/2 incl.	150
	ASTM A501		ABS	Grades AH 32 & 36			
	ASTM A516	Grades 55 & 60 65 & 70		DH 32 & 36 EH 32 & 36			
	ASTM A524	Grades I & II	ABS	Grades A. B, D,			
	ASTM A529			CS, DS		Over 2-1/2	225
	ASTM A537	Classes 1 & 2		Grade E			
C	ASTM A572	Grades 60 & 65			Shielded metal arc welding with low-hydrogen electrodes, submerged arc welding[2], gas metal arc welding, flux cored arc welding	1/8 to 3/4 incl.	50
	ASTM A633	Grade E				Over 3/4 thru 1-1/2 incl.	150
	API 5L	Grade X52				Over 1-1/2 thru 2-1/2 incl	225
						Over 2-1/2	300

Notes:
I . When the base metal temperature is below 32°F, the base metal shall be preheated to at least 70°F and this minimum temperature maintained during welding.
2. For modification of preheat requirements for submerged arc welding with parallel or multiple electrodes, see 3.4.2.
3. See 5.8.2 and 5.5 for ambient and base-metal temperature requirements.

Table 3.3
Prequalified WPS Requirements[5] (See 3.6)

Variable	Position	Weld Type	SMAW	SAW[3] Single	SAW[3] Parallel	SAW[3] Multiple	GMAW/ FCAW[6]
Maximum Electrode Diameter	Flat	Fillet (Note 1)	5/16 in.	1/4 in.			1/8 in.
		Groove (Note 1)	1/4 in				
		Root Pass	3/16 in.				
	Horizontal	Fillet	1/4 in.	1/4 in.			1/8 in.
		Groove	3/16 in.	Requires WPS Qualification Test			
	Vertical	All	3/16 in. (Note 2)				3/32 in
	Overhead	All	3/16 in. (Note 2)				5/64 in.
Maximum Current	All	Fillet	Within the range of recommended operation by the filler metal manufacturer	1000 A	1200 A	Unlimited	Within the range of recommended operation by the filler metal manufacturer
		Groove weld root pass with opening		600 A	700 A		
		Groove weld root pass without opening			900 A		
		Groove weld fill passes			1200 A		
		Groove weld cap pass		Unlimited			
Maximum Root Pass Thickness (Note 3)	Flat	All	3/8 in.	Unlimited			3/8 in.
	Horizontal		5/16 in.				5/16 in.
	Vertical		1/2 in.				1/2 in.
	Overhead		5/16 in.				5/16 in.
Maximum Fill Pass Thickness	All	All	3/16 in.	1/4 in.	Unlimited		1/4 in.
Maximum Single Pass Fillet Weld Size	Flat	Fillet	3/8 in.	Unlimited			1/2 in.
	Horizontal		5/16 in.	5/16 in.	5/16 in.	1/2 in.	3/8 in.
	Vertical		1/2 in.				1/2 in.
	Overhead		5/16 in.				5/16 in.
Maximum Single Pass Layer Width	All (for GMAW/ FCAW/ SMAW) F & H (for SAW)	All	Note 4	Split layers if w>5/8 in.	Split layers with tandem electrodes if w > 5/8 in.	If w >1in., split layers	Note 4

Notes:

(1) Except root passes

(2) 5/32 in. for EXX14 and low-hydrogen electrodes.

(3) See 3.6.2 for width-to-depth limitations.

(4) In the F, H, or OH positions for nontubulars, split layers when the layer width w > 5/8 in. In the vertical position for nontubulars or the 5G or 6G for tubulars, split layers when the width w > 1 in.

(5) Shaded areas indicate nonapplicability.

(6) GMAW-S in not prequalified

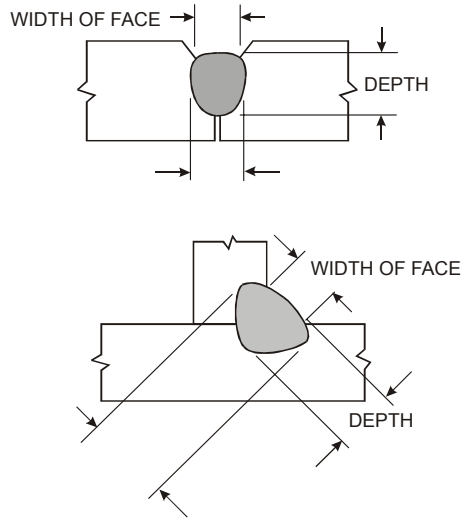

Figure 3.1 Weld Bead in which Depth and Width Exceed the Width of the Weld Face (see 3.6.2)

3.8 Partial Joint Penetration Requirements

Partial joint penetration groove welds which may be used without performing the WPS qualification tests prescribed in section 4 are subject to all joint detail limitations specified in Appendix E (Figure E.1, Sheets 1-7).

3.8.1 Definition.

Except as provided in 3.9.2 and Appendix E (Figure E.2, Sheet 1, B-L1-S), groove welds without backing, welded from one side or groove welds welded from both sides, but without backgouging, are considered partial joint penetration groove welds.

3.8.2 Details (Tubular)

Details for partial joint penetration tubular groove welds that are accorded prequalified status shall conform to the following provisions:

- (1) PJP tubular groove welds, other than T-, Y-, and K-connections, may be used without performing the WPS qualification tests, when these can be applied and meet all of the joint dimension limitations as specified in Appendix E (Figure E.1, Sheets 1-7).
- (2) PJP T-, Y-, and K-tubular connections, welded by any process must be qualified in accordance with section 4.

3.9 Complete Joint Penetration Groove Weld Requirements

Complete joint penetration groove welds which may be used without performing the WPS qualification test prescribed in section 4 are subject to all joint detail limitations specified in Appendix E (Figure E.2, Sheets 1-11).

3.9.1 J- and U-Groove Preparation

J- and U-grooves and the other side of partially welded double-V and double-bevel grooves may be prepared before or after assembly. After backgouging, the other side of partially welded double-V or double-bevel joints should resemble a prequalified U- or J-joint configuration at the joint root.

3.9.2 Tubular Butt Joints

For tubular groove welds to be given prequalified status, the following conditions shall apply:

- Prequalified WPSs. Where welding from both sides or welding from one side with backing is possible, any WPS and groove detail that is appropriately prequalified in conformance with section 3 may be used, except that SAW is only prequalified for diameters greater than or equal to 24 in. Welded joint details shall be in conformance with section 3.
- Nonprequalified Joint Detail. There are no prequalified joint details for complete joint penetration groove welds in butt joints made from one side without backing. See 4.12.2.

3.9.3 Tubular T-, Y-, and K-Connections

CJP T-, Y-, and K-tubular connections, welded by any process must be qualified in accordance with section 4.

This page intentionally blank

4 Qualification

4.0 Scope

The requirements for qualification testing of welding procedure specifications (WPSs) and welding personnel are described as follows:

Part A — General Requirements. This part covers both welding procedure and performance general requirements.

Part B — Procedure Qualification. This part covers the specific requirements for qualification of non-armor Welding Procedure Specifications (WPSs) through the development of Procedure Qualification Records (PQR). The requirements for qualification of armor WPSs are specified in Appendix B.

Part C — Performance Qualification. This part covers the specific testing requirements for non-armor performance qualification required by the code to determine a welder's, welding operator's or tack welder's ability to produce sound welds. Armor performance qualification requirements are specified in Appendix B.

Part A
General Requirements

4.1 General

The qualification requirements of this code are to assure that the procedures used in production meet a recognized standard. To accomplish this objective, each contractor or manufacturer shall do the following:

(1) Prepare a written preliminary WPS in accordance with Part B.

(2) Qualify the welding parameters described by the preliminary WPS in accordance with Part B of this section using materials, equipment, cleaning and preparation methods, welding conditions, etc. that are developed. The actual test parameters used must be documented in the PQR.

(3) Qualify the welders, welding operators, and tack welders in accordance with Part C of this section prior to performing any production work.

(4) Maintain records of each of the above items on forms such as or similar to those shown in Appendix C.

(5) Impart knowledge of the procedures to be used to the welders, welding operators, and tack welders

4.1.1 Procedure Qualification Record (PQR)

Except for prequalified and ballistic WPSs, all procedures shall be qualified through a documented PQR in accordance with Part B. All ballistic procedures must be qualified per Appendix B shall be submitted for approval by the procuring activity.

4.1.1.1 Impact Test Requirements

When required by contract drawings or specifications, impact tests shall be included in the PQR. The impact tests, requirements, and procedures shall be in conformance with the provisions of this code, or as specified in the contract documents.

4.1.2 Welding Procedure Specification (WPS)

All WPSs qualified under the provisions of this section shall be documented using the form found in Appendix C or alternate form based on the codes/standards referenced in 1.1.1 provided the same variables are addressed.

4.1.3 Qualification of Welding Procedures

4.1.3.1 Only procedures qualified in accordance with Part B of this section shall be recognized as approved procedures.

4.1.3.2 Procedures qualified to specifications other than this code shall be documented by sufficient test data to satisfy the requirements of Part B of this section. These procedures must be reviewed and approved by the contractor.

4.1.3.3 The procuring activity should accept properly documented evidence of previous qualification of the joint welding procedures to be employed, unless a new procedure qualification is required by the contract documents. The modified WPS and PQR forms shall be used when the previously qualified procedures do not meet all of the requirements of Part B.

4.1.4 Qualification of Welders, Welding Operators, Tack Welders, and Robotic Applications

4.1.4.1 Welders, welding operators, and tack welders to be employed on work under this code shall have been qualified in accordance with the provisions of Part C of this section.

4.1.4.2 A robotic system using a qualified WPS must have the basic program(s) validated prior to production as specified in 4.15.7.1. Minor modifications may be performed by a qualified operator without further validation.

4.1.4.3 Properly documented evidence of previous qualification performed in accordance with Part C of this section, or equivalent may be accepted with the contractor's approval.

4.2 Common Requirements for WPS and Welding Personnel Performance Qualification

4.2.1 Qualification Responsibility

Except as permitted in 4.1.3.2, 4.1.3.3 and 4.2.2, each contractor or manufacturer shall conduct the tests required by this code to qualify the welding procedures and the welders, welding operators, and tack welders. Weld procedures and welders qualified for any contract, at any prime contractor's site shall be considered qualified for all their sites. WPSs qualified by the prime contractor may be supplied and used by their approved subcontractors. Prime contractors are responsible for the performance of their subcontractors.

4.2.2 Qualification to Other Codes or Standards

Qualifications which were performed to and met the requirements of earlier editions of AWS, ASME, CWB, API or equivalent, while those editions were in effect, are valid and may be used. It is not acceptable to use an earlier edition for new qualifications. Procedures must be approved by the prime contractor.

4.2.3 Aging

When permitted by the filler metal specification applicable to weld metal being tested, fully welded qualification test specimens may be aged at 200°F to 220°F for 48 ± 2 hours.

4.2.4 Records

Each contractor or manufacturer shall maintain a record of all welding procedure and performance qualifications of welders, welding operators, tack welders and robotic programs. These records shall be made available to those authorized to examine them.

4.2.5 Positions of Welds

All welds shall be classified as flat (F), horizontal (H), vertical (V) and overhead (OH), in accordance with the tabulation shown in Figures 4.1 and 4.2.

Test assembly positions are shown in:

- Figure 4.3 (groove welds in plate)
- Figure 4.4 (fillet welds in plate)
- Figure 4.5 (groove welds in pipe or tubing)
- Figure 4.6 (fillet welds in pipe or tubing)

Tabulation of positions of groove welds			
Position	Diagram Reference	Inclination of axis	Rotation of face
Flat	A	0° to 15°	150° to 210°
Horizontal	B	0° to 15°	80° to 150° 210° to 280°
Overhead	C	0° to 80°	0° to 80° 280° to 360°
Vertical	D E	15° to 80° 80° to 90°	80° to 280° 0° to 360°

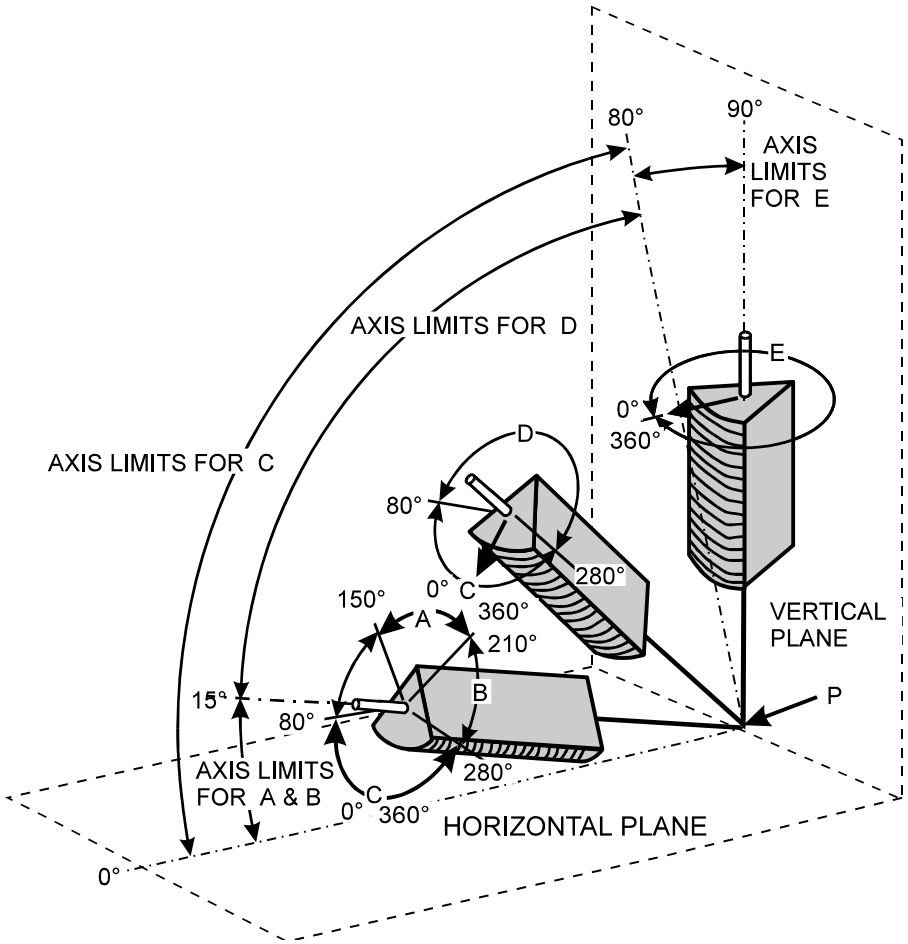

Notes

1. The horizontal reference plane is always taken to lie below the weld under consideration.
2. The inclination of axis is measured from the horizontal reference plane toward the vertical reference plane.
3. The angle of rotation of the face is determined by a line perpendicular to the theoretical face of the weld, which passes through the axis of the weld. The reference position (0°) of rotation of the face invariably points in the direction opposite to that in which the axis angle increases. When looking at point P, the angle of rotation of the face of the weld is measured in a clockwise direction from the reference point (0°).

Figure 4.1 — Positions of Groove Welds (see 4.2.5)

Tabulation of positions of fillet welds			
Position	Diagram Reference	Inclination of axis	Rotation of face
Flat	A	0° to 15°	150° to 210°
Horizontal	B	0° to 15°	80° to 150° 210° to 235°
Overhead	C	0° to 80°	0° to 125° 235° to 360°
Vertical	D E	15° to 80° 80° to 90°	125° to 235° 0° to 360°

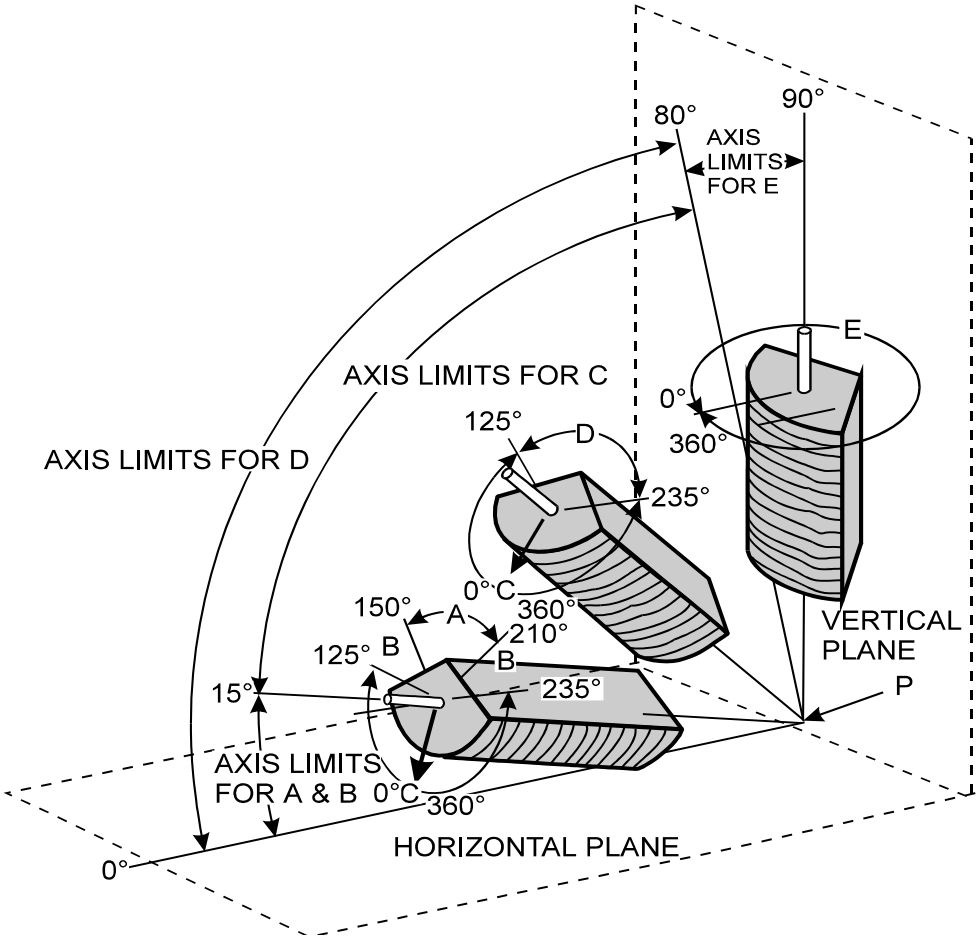

Figure 4.2 — Positions of Fillet Welds (see 4.2.5)

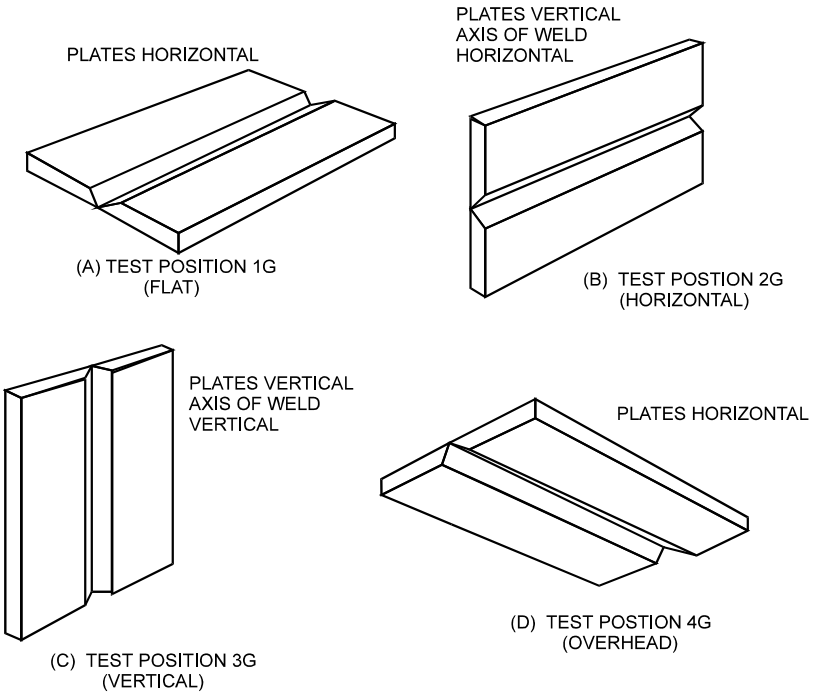

Figure 4.3 — Position of Test Plates for Groove Welds (see 4.2.5)

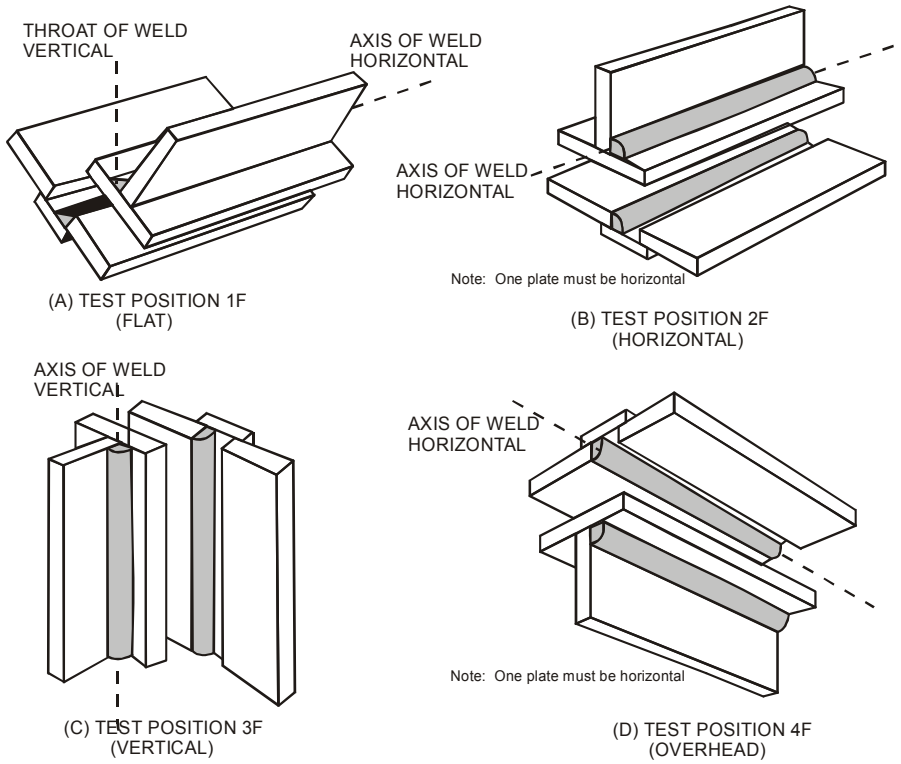

Figure 4.4 — Position of Test Plates for Fillet Welds (see 4.2.5)

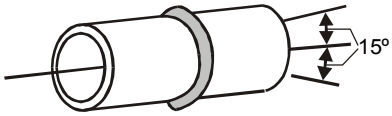

PIPE HORIZONTAL AND ROTATED WELD FLAT (± 15º). DEPOSIT FILLER METAL AT OR NEAR THE TOP

(A) TEST POSITION 1G ROTATED

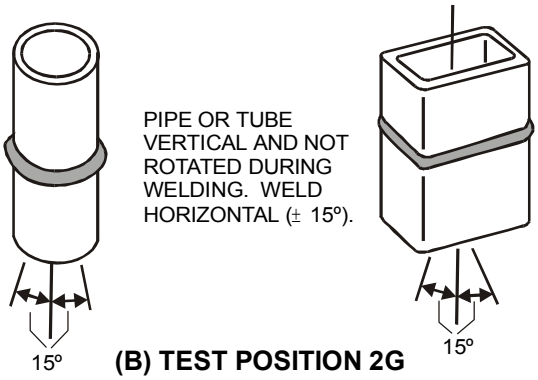

PIPE OR TUBE VERTICAL AND NOT ROTATED DURING WELDING. WELD HORIZONTAL (± 15º).

(B) TEST POSITION 2G

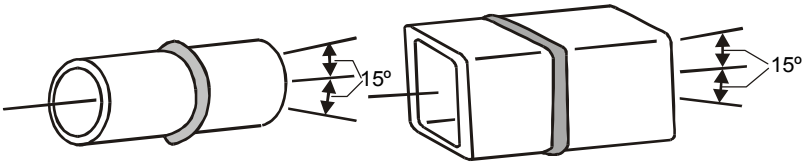

PIPE OR TUBE HORIZONTAL FIXED (± 15º) AND NOT ROTATED DURING WELDING WELD FLAT, VERTICAL OR OVERHEAD

(C) TEST POSITION 5G

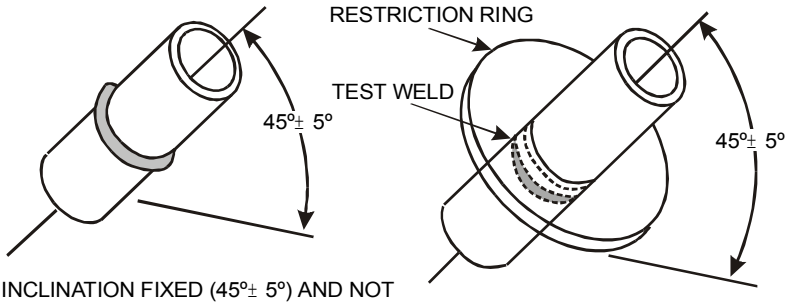

PIPE INCLINATION FIXED (45º± 5º) AND NOT ROTATED DURING WELDING

(D) TEST POSITION 6G

(E) TEST POSITION 6GR (T-, Y-, OR K-CONNECTION

Figure 4.5 — Position of Test Plate for Groove Welds (see 4.2.5)

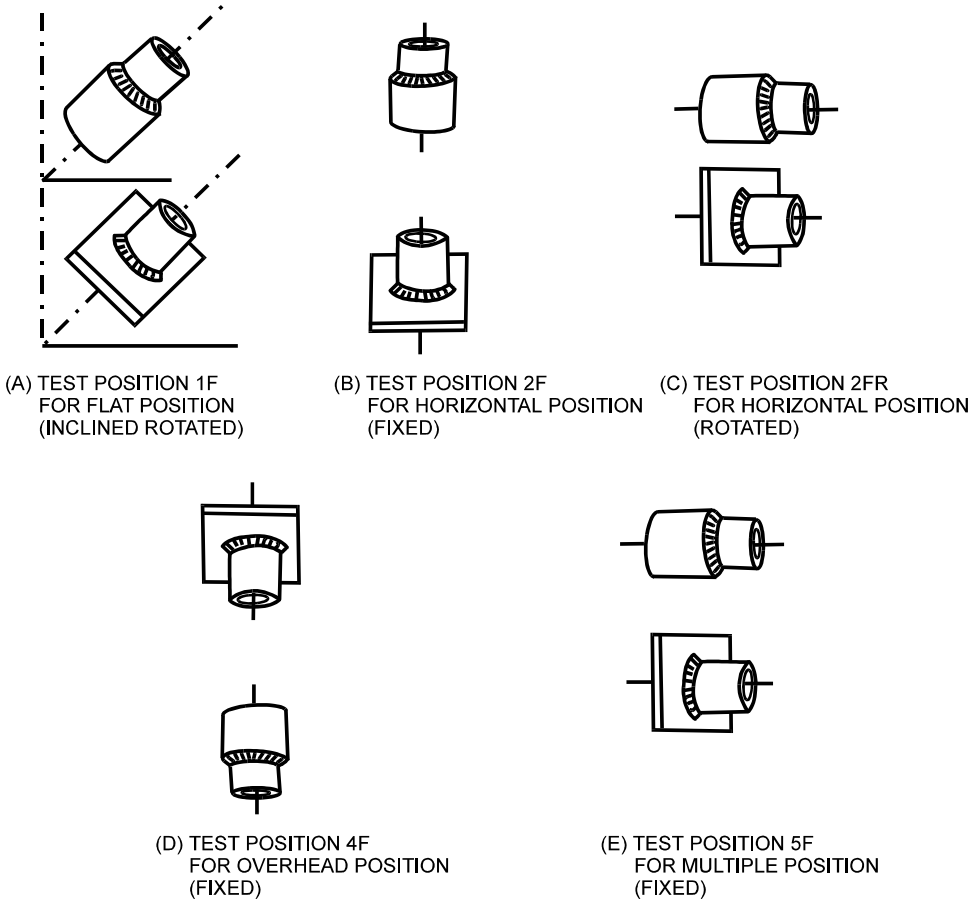

Figure 4.6 — Position for Test Pipes for Fillet Welds (see 4.2.5)

Part B
Procedure Qualification

4.3 General

4.3.1 The qualification variables used in making a procedure qualification test weld are listed in 4.13.

4.3.2 Mechanical test specimen information shown in Appendix D shall be used for testing. The test results shall be recorded on or appended to a PQR containing the actual qualification variables.

4.3.3 If the results meet the acceptance criteria specified, the contractor shall sign and date the PQR indicating that the PQR is an accurate record of the welding and testing of the procedure qualification test weldment. The contractor may then prepare and issue an approved WPS. The contractor shall sign and date the WPS to signify acceptance of responsibility for use of the WPS in production.

4.3.4 A WPS may require the support of more than one PQR, while one PQR may support a number of WPSs. A WPS shall specify a range or a single value for each welding variable applicable to the welding process identified in 4.13, Welding Procedure Specification Data and 4.14 Procedure Qualification Variables.

4.3.5 Except as permitted in 4.2.1, a WPS qualified by one contractor is not transferable to another contractor

4.3.6 Special test weldments may be used for procedure qualification, and shall be submitted by the prime contractor and approved by the procuring activity.

4.3.7 This code recognizes two types of special test weldments:

- (1) *Simulated Service Test Weldments* These are test weldments in which qualification requires tests simulating service conditions. Tests may include toughness, flexural, static or cyclic loading to simulate the type of loading

that the weldment will encounter in service. Proof tests such as hydrostatic or leak tests may also be appropriate.

- (2) *Prototype Structure Test Weldments* These are test weldments in which a prototype of the actual weldment is subjected to field tests in which it is loaded and demonstrated to perform the function for which it was designed.

4.3.8 Base metals are grouped for qualification purposes on the basis of weldability, similar mechanical properties, chemical composition, and metallurgical compatibility. Such groups are assigned M-numbers in Appendix A of this specification. Base metals listed in Table 3.1 that are subject to WPS qualification testing shall qualify other base metal groups in accordance with Table 4.6. Base metals not listed in Table 3.1 or Appendix A shall be qualified in accordance with this section and approved by the contractor.

4.3.9 For the welding of dissimilar base metals, a procedure qualification shall be made for each combination of M-numbers to be joined. If the WPS for welding the combination of base metals specifies the same qualification variables, including electrode or filler metal, as both WPSs for welding each base metal to itself, such that the base metal is the only change, then the WPS for welding the combination of base metals is also qualified. In addition, when base metals of two different M-numbers are qualified using a single test weldment, that test weldment qualifies the welding of those two M-numbers to themselves as well as to each other using the variables qualified.

4.3.10 If the referencing document requires fracture toughness testing of the base metal, then procedure qualification shall be made for each combination of M-number and group number to be joined. A procedure qualification shall be made for each M-number and group number combination of base metals, even though procedure qualification tests have been made for each of the two base metals welded to itself. If the welding procedure specification (WPS) for welding the combination of base metals specifies the same qualification variables, including electrode or filler metal, as both WPSs for welding each base metal to itself, such that the base metal is the only change, then the WPS for welding the combination of base metals is also qualified. In addition, when base metals of two different M-numbers and group numbers combinations are qualified using a single test weldment, that test weldment qualifies the welding of those two M-numbers and group numbers to themselves as well as to each other using the variables qualified.

4.3.11 When fracture toughness is a requirement and a qualified procedure exists that satisfies all requirements except fracture toughness, it is necessary only to prepare an additional test weldment with sufficient material to provide the required fracture toughness specimens. The test plate shall be welded using that procedure, plus those variables applicable to fracture toughness. A new or revised PQR shall be prepared and the WPS shall then be revised or a new WPS issued to accommodate the qualification variables for fracture toughness applications listed in 4.14 Procedure Qualification Variables.

4.3.12 Cladding and hardfacing require separate qualification for each base metal M-number, and filler metal combination. Welds made to join clad metals to other clad metals or to unclad metals shall be separately qualified or may be qualified by a combination of a PQR for joining an unclad metal and a PQR for applying the cladding.

4.3.13 During the welding of procedure qualification weldments, welders and welding operators shall be under the full control of the contractor. Only activities 1, 5, 6 and 7 listed below may be subcontracted by the employer.

- (1) Preparation of test materials for welding
- (2) Instruction of the welder or welding operator on use of the welding procedure
- (3) Performance of welding
- (4) Recording of actual qualification variables used in the test (see 4.14)
- (5) Preparation of test specimens from the completed weldment
- (6) Performance of examinations and tests
- (7) Documenting of test results
- (8) Certification of the final PQR

4.4 Qualification Thickness Limitations

4.4.1 Limitations on the thickness ranges qualified by procedure qualification tests are given in the following tables:

- Table 4.2 Thickness and Size Limitations for Fillet Welds for Procedure Qualification.
- Table 4.3 Thickness Limitations of Plate and Pipe for Groove Welds for Procedure Qualification.

Table 4.1
Test Methods for Procedure Qualification (see 4.6)

	Groove Welds	Fillet Welds		Stud Welds	Weld Cladding	Hard Facing
		Bend-Break Test	Alternate Shear Test			
Visual examination	Yes	Yes	Yes	Note 2	Note 2	Note 2
Guided bend tests	Yes [1,3]	—	—	—	Yes [8]	—
Tension tests	Yes [3]	—	—	Yes, or torque [5]	—	—
*Macro-examination	Note 1	Yes [10]	Yes [10]	Yes*	—	Note 2
Bend tests	—	Yes [4]	—	Yes [6]	—	—
Torque tests	—	—	—	Yes, or tension [5]	—	—
Fracture toughness test	Note 2,3	—	—	—	—	—
Shear tests	—	—	Yes [7]	—	—	—
Penetrant examination	—	—	—	—	Yes [8]	Note 2
Chemical analysis	—	—	—	—	Yes [8]	Note 2
Hardness test	—	—	—	—	—	Yes [9]

*Except that unclad, unpainted M-1 materials are exempt.

Notes:

1. The use of a macro examination in lieu of bend tests shall be permitted only if the material is such that the specimen cannot be bent within the dimensional limitations stated in Note 1 of Figure D5.1, D5.2, and D5.3 in Appendix D and when the criteria for outer fiber elongation and the alternate bend radii provided in Appendix D dealing with Test Fixtures have been demonstrated by calculation using the formula provided.
2. If specified in referencing document.
3. Quantity and type of specimens are shown in Figure 4.9, Figure 4.10 and Figure 4.11.
4. Quantity and type of specimens are shown in Figure 4.12.
5. Requirements are found in 7.4.5.2, 7.4.5.3 and Figure 7.1.
6. Requirements are found in 7.4.5.1.
7. Quantity and type of specimens are shown in Figure 4.12.
8. Requirements are found in 4.10.
9. Requirements are found in 4.11.
10. Requirements are found in 4.9.4.

Table 4.2
Thickness and Size Limitation for Fillet Welds for Procedure Qualification (see 4.4.1)

Fillet Test Weldment	Thickness and Size Range Qualified	
	Base metal Thickness[a,b,c,d,e]	Fillet Size (leg)[d]
Single Pass	Unlimited	Maximum welded single-pass fillet size and smaller
Multiple Pass	Unllimited	1/2 of that welded during qualification to unlimited

Notes:

a. For OFW, the maximum base metal thickness qualified is the thickness of the test weldment.

b. For GMAW—short-curcuiting transfer, the maximum base metal thickness qualified is the test weldment thickness.

c. For fracture toughness applications less than 5/8 in thick, the base metal thickness of the test weldment is the minimum base metal thickness qualified.

d. For M-11 steels, the fillet size qualified shall be equal to or less than the fillet size used in the test.

e. If a test weldment receives a postweld heat treatment exceeding the lower transformation temperature, the maximum base metal thickness qualified is the base metal thickness of the test weldment.

Table 4.3
Thickness Limitations of Plate, Sheet Metal, and Pipe for Groove Welds for Procedure Qualification (see 4.4.1)

Test Weldment [a,b,c,d,f]	Base Metal Thickness Qualified[d,e](in.)		Deposit Weld Metal Thickness Qualified (t)[d](in.)
Thickness (T) (in.)	Minimum	Maximum	Maximum
≤1/8 (Sheet metal)	1/2T	4T (not to exceed 1/4")	4t
1/8< T <3/4	1/8	2T	2t
3/4≤ T < 1	3/16	2T	2t
1 ≤ T <6	3/16	Unlimited	Unlimited

Notes:

a. Provided that the weld penetration can be measured - EBW and LBW qualified thickness range shall be 1.2T for test weldments 1 in. and under in thickness and 1.1 T for weldments over 1 in. thick. If weld penetration cannot be measured the qualified thickness ranges are 1.1T and 1.05T respectively.

b. When the groove is filled using a combination of welding processes:
— The test weldment thickness "T" is applicable for the base metal and shall be determined from the Base Metal Thickness Qualified column.
— The thickness "t" of the weld metal for each welding process shall be determined from the Deposited Weld Metal Thickness column.
— Each welding process qualified in this combination manner may be used separately only within the same qualification variables and the thickness limits

c. For OFW, the maximum base metal thickness qualified is the thickness of the test weldment, and the maximum weld metal thickness qualified is the thickness of the weld metal deposited in the test weldment.

d. For GMAW short-circuit transfer, the maximum base metal thickness qualified is the test weldment thickness, and the maximum weld metal thickness qualified is the weld-metal thickness deposited in the test weldment.

e. For fracture toughness applications less than 5/8 in. thick, the base metal thickness of the test weldment is the minimum base metal thickness qualified.

f. If a test weldment receives a postweld heat treatment exceeding the lower transformation temperature, the maximum base metal thickness qualified is the base metal thickness of the test weldment, and the maximum weld metal thickness qualified is the weld metal of the test weldment.

T = The thickness of the Test Weldment Base Metal

t = The thickness of the Weld Deposit, excluding reinforcement.

Table 4.4
Thickness Limitations for Cladding and Hardfacing for Procedure Qualification
(see 4.4.1)

Test Weldment Thickness (T) (in.)	Qualified Base Metal Thickness (in.) Minimum	Maximum
Less than 1	T	2T
1 and over	1 in.	Unlimited

Note: The minimum weld metal thickness qualified for cladding and hadfacing is one layer if the test weldment has only one layer, and is two layers if the test weldment has two or more layers. The number of layers applies individually to each filler metal classification.

- Table 4.4 Thickness Limitations for Cladding and Hardfacing for Procedure Qualification.

4.4.2 The limitations in the tables above are based upon the following criteria:

- (1) the size and number of passes of a fillet weld
- (2) the base metal and weld metal thicknesses for groove welds;
- (3) the base metal thickness for weld cladding and hardfacing, or;
- (4) the base metal thickness for sheet metals.

4.4.3 Complete penetration groove welds shall also qualify partial penetration groove welds, within the qualification limits given in Table 4.3, and fillet welds in all thicknesses and diameters.

4.4.4 In addition to the welding data required to be included in the WPS by 4.13 Welding Procedure Specification Data, when multi process or multiple filler metal classifications are used in a single test weldment, the thickness ranges permitted for use in the WPS shall apply separately to each welding process and filler metal classification. The weld deposit thickness for each welding process and each filler metal classification used in the qualification test shall be recorded on the PQR.

4.4.5 In addition to the procedure qualification variables required to be recorded on the PQR by 4.14 Procedure Qualification Variables, the weld deposit thickness for each welding process and each filler metal classification used in the qualification test shall be recorded on the PQR for all applications.

4.5 Qualification Position Limitations

4.5.1 The production welding positions qualified by a WPS shall conform to the requirements of Table 4.5.

4.6 Methods of Testing and Acceptance Criteria

Test weldments shall be subjected to the applicable tests in Table 4.1. The type, number, location, and evaluation criteria for tests shall be as specified in 4.7 through 4.12.

4.7 Special Test Weldment Acceptance Criteria

4.7.1 Special test weldments allowed by 4.3.6, shall be tested as specified by the procuring activity. When a test in Table 4.1 is specified, the acceptance criteria shall be as required in this code. Criteria for any additional testing shall be specified by the procuring activity.

4.8 Groove Test Weldments and Acceptance Criteria

4.8.1 Groove test weldments shall be large enough to provide the necessary test specimens. Multiple test weldments may be necessary to provide all the required specimens. The pipe and tube test weldment is illustrated in Figure 4.9. Plate and sheet test weldments are illustrated in Figures 4.10 and 4.11. The thickness of a test weldment shall be determined as provided in Tables 4.2 through 4.4. For metals less than 1/8 in., see 4.12 for acceptance criteria.

4.8.2 Test weldments for EBW and LBW shall have a joint geometry duplicating that to be used in production.

4.8.3 Prior to removing specimen blanks from the completed test weldment, the weld shall be visually examined on all accessible surfaces and shall meet the following criteria:

- (1) There shall be no evidence of cracks, incomplete fusion, or incomplete joint penetration.

Table 4.5
WPS Qualification — Production Welding Positions Qualified by Plate and Pipe Tests
(see 4.5.1)

Qualification Test			Production Plate Welding Qualified			Production Pipe Welding Qualified				
	Weld Type	Positions	Groove CJP	Groove PJP	Fillet[7]	Butt-Groove CJP	Butt-Groove PJP	T-, Y-, K-Groove CJP	T-, Y-, K-Groove PJP	Fillet[7]
PLATE	CJP Groove[1]	1G[2] 2G[2] 3G[2] 4G[2]	F, F, H, V, OH	F, F, H, V, OH	F, F, H, V, OH	F, F, H, V, OH	F, F, H, V, OH			F, F, H, V, OH
PLATE	Fillet[1]	1F 2F 3F 4F			F, F, H, V, OH					F, F, H, V, OH
PLATE	Plug/ Slot	Qualifies Plug/Slot Welding for Only the Positions Tested								
TUBULAR	CJP Groove	1G Rotated 2G 5G (2G + 5G) 6G 6GR	F F, H F, V, OH All All All[4]	F F, H F, V, OH All All All	F F, H F, V, OH All All All	F[3] (F, H)[3] (F, V, OH)[3] All[3] All[3] All[4]	F F, H F, V, OH All All All	 All[5] All[5]	F F, H F, V, OH All[6] All[6] All	F F, H F, V, OH All All All
TUBULAR	Fillet	1F Rotated 2F 2F Rotated 4F 5F			F F, H F, H F, H, OH All					F F, H F, H F, H, OH All

CJP — Complete Joint Penetration
PJP — Partial Joint Penetration
(R) — Restriction

Notes:
1. Qualifies for welding axis with an essentially straight line, including welding along a line parallel to the axis of circular pipe.
2. Qualifies for circumferential welds in pipes equal to or greater than 24 in. nominal outer diameter.
3. Production butt joint details without backing or backgouging require qualification testing of the joint details shown in Figures 4.7 and 4.8.
4. Limited to prequalified joint details. See Appendix E.
5. For production joints of CJP T-, Y-, and K-connections that conform to ANSI/AWS D1.1 requirements
6. For production joints of PJP T-, Y-, and K-connections that conform to ANSI/AWS D1.1 requirements
7. Fillet welds in production T-, Y-, and K-connections that conform to ANSI/AWS D1.1 requirements.

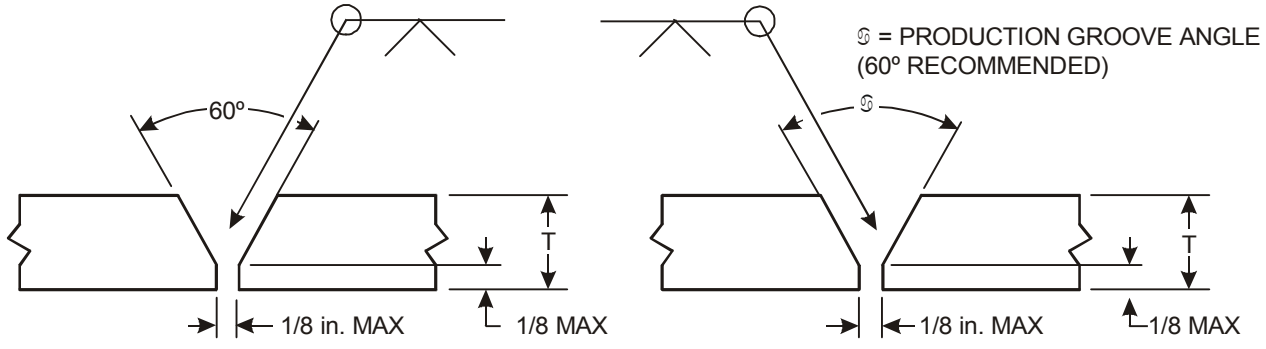

(A) FOR WELDER QUALIFICATION **(B) WPS QUALIFICATION**

NOTE: T = QUALIFICATION PIPE OR BOX TUBE WALL THICKNESS

Figure 4.7 — Tubular Butt Joint — Welder or WPS Qualification — without Backing (see Table 4.5)

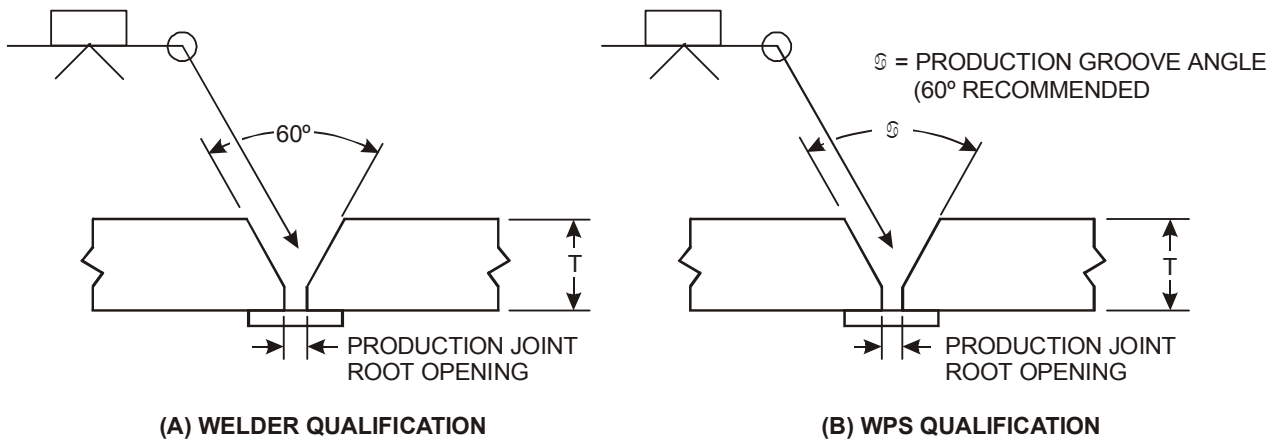

NOTE = QUALIFICATION PIPE OR BOX TUBE WALL THICKNESS

Figure 4.8 — Tubular Butt Joint — Welder or WPS Qualification — with Backing (see Table 4.5)

- (2) The depth of undercut shall not exceed the lesser of 10 percent of the base metal thickness or 1/32 in.
- (3) Porosity shall not exceed the limitations specified in the Visual Acceptance Criteria Matrix (Table 6.1).

4.8.4 After visual examination, the test weldment shall be evaluated using the tests required in Table 4.1. The number and location of specimen blanks to be removed are shown in Figure 4.9 for pipe, and Figure 4.10 or 4.11 for plate and sheet respectively. The preparation and dimensions of specimen blanks shall be as provided in Appendix D of this specification.

4.8.5 Each tensile test specimen shall have a tensile strength not less than the following:

- (1) the specified minimum tensile strength of the base metal, or of the weaker of the two base metals if metals of different minimum tensile strength are used, or
- (2) the specified minimum tensile strength of the weld metal when the referencing document provides for the use of weld metal having a lower tensile strength than the base metal, or
- (3) if the specimen breaks in the base metal outside of the weld or weld interface, the test shall be accepted, provided the strength is not more than 5% below the specified minimum tensile strength of the base metal, or
- (4) if the base metal has no specified minimum tensile strength then failure in the base metal shall be acceptable.

4.8.6 Bend specimens shall be bent in one of the guided bend test fixtures shown in Appendix D. For transverse specimens, the weld metal and heat-affected zone shall be completely within the bent portion of the specimen after bending. There shall be no open discontinuity exceeding 1/8 in., measured in any direction on the convex surface of the specimen after bending. The sum of discontinuities exceeding 1/32 in. shall not exceed 3/8 in. Cracks occurring on the corners of the specimen during bending that do not exceed 1/4 in. shall not be considered, unless there is definite evidence that they result from weld discontinuities.

4.8.6.1 When material combinations differ markedly in mechanical bending properties, as between two base materials or between the weld metal and the base metal, longitudinal bend tests (face and root) may be used in lieu of the transverse face and root bend tests. Tension tests may be substituted if neither bend test option is possible. The weld shall meet or exceed the yield strength of the lower strength material or that specified on the drawing. The welded test specimens shall be prepared by cutting the test plate as shown in Figure 4.9. The test specimens for the longitudinal bend test shall be prepared for testing as shown in Appendix D.

4.8.7 For fracture toughness testing, the type of test, number of specimens, and acceptance criteria shall be in accordance with the contract document. The procedures and apparatus shall conform to the requirements of *ANSI/AWS B4.0, Standard Methods for Mechanical Testing of Welds*. Specimen blanks shall be removed from test weldments in accordance with Figures 4.9, 4.10, and 4.11 as applicable.

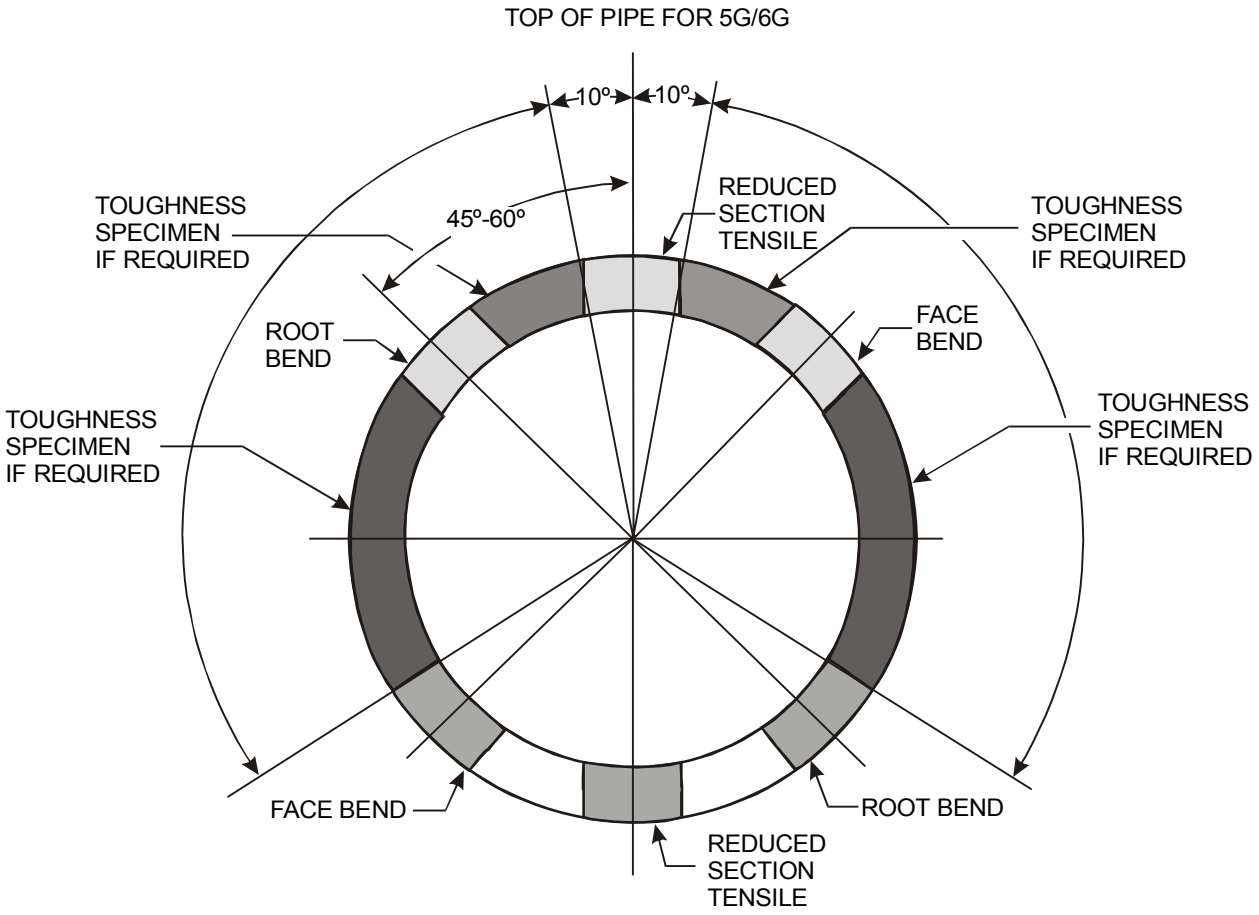

Notes:

1. Toughness specimens, when required shall be removed from the indicated sections.
2. Metal up to and including 3/8 in. require 2 root and 2 face bend specimens. For metal over 3/8 in. thick, 4 side bend specimens shall be used. For all metal thicknesses, two reduced section specimens are required
3. Dimensions for the specimen blanks and details of bend tests are shown in Appendix D.
4. Material thickness shall be determined from the requirements provided in Table 4.3.

Figure 4.9 — Location of Groove Weld Test Specimens — Pipe and Tube (see 4.8.1)

4.9 Fillet Test Weldments and Acceptance Criteria

Fillet welds may be qualified by either macroetch tests (4.9.4), fillet weld bend-break tests (4.9.5), or fillet weld shear tests (4.9.6).

4.9.1 Qualification of groove welds qualifies for fillet welds but not vice versa.

4.9.2 Fillet test weldment dimensions and test specimens are detailed in Figures 4.12 or 4.13 as appropriate.

4.9.3 Prior to removing specimen blanks for testing, the completed test weld shall be visually examined and meet the following criteria:

- (1) There shall be no cracks or incomplete fusion.

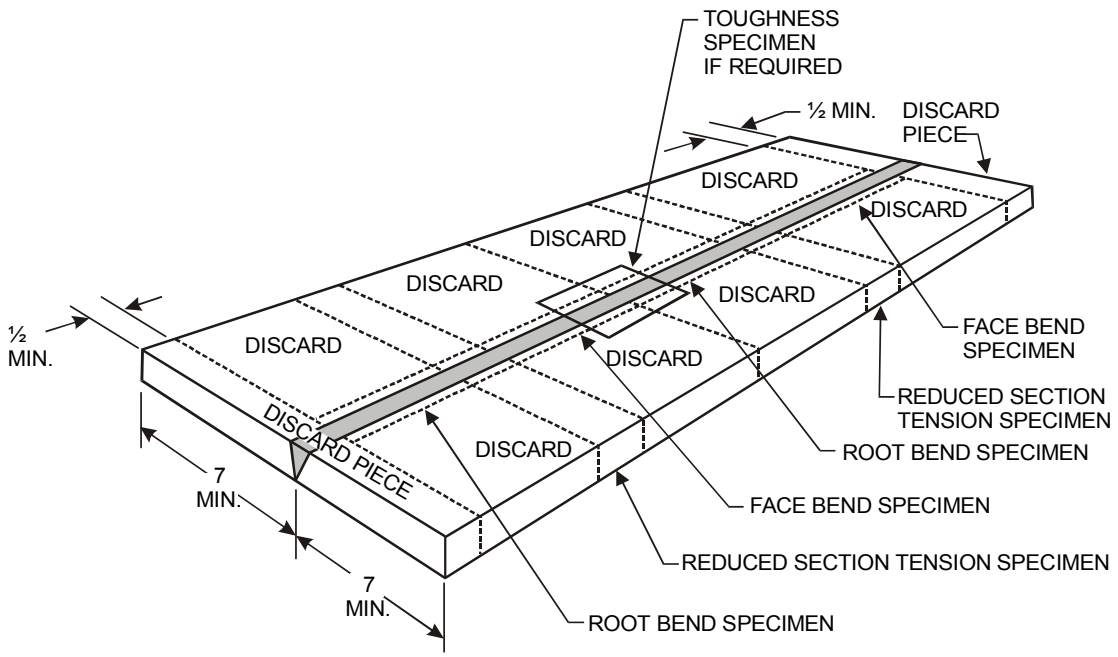

.L DIMENSIONS IN INCHES

ALL DIMENSIONS ARE APPROXIMATE UNLESS A TOLERANCE IS GIVEN

Notes:

1. Material thickness shall be determined in accordance with Table 4.3.
2. Dimensions for the specimen blanks and details of bend tests are given in Appendix D.
3. A longer test plate will be required if toughness specimens are necessary. Toughness specimens should be located near the midlength of the plate.
4. This test requires 2 root bends, 2 face bends, and 2 reduced section tension specimens.
5. Make allowances for cutting.

Figure 4.10 — Location of Tension, Longitudinal Bend, and Toughness Specimens — Sheet and Plate (see 4.8.1)

- (2) Undercut depth shall not exceed the lesser of 10 percent of the base metal thickness or 1/32 in.
- (3) Profile shall be in accordance with Table 6.1.

4.9.4 *Macroetch Test Specimen* If this method is selected, 3 macroetch specimens are required (Figure 4.12 or Figure 4.13). There shall be no cracks, incomplete joint penetration, or incomplete fusion in the macro cross section.

4.9.5 *Fillet-Weld Bend-Break Test* If both single and multiple pass welds are to be qualified, one procedure qualification specimen shall be welded with the maximum size single pass to be used, and a second shall be welded with the minimum size multiple pass to be used. The test specimens are shown in Figure 4.13. Specimens shall be bent with the weld root in tension until the specimen either fractures or until it is bent flat upon itself. The specimen shall be accepted if it does not fracture or if the fillet fractures, the fractured surface shall exhibit no cracks or incomplete root fusion and no inclusion or porosity in the fracture surface exceeding 3/32 in. in its greatest dimension. The sum of the greatest dimension of all inclusions and porosity shall not exceed 3/8 in. in the specimen length.

4.9.6 *Fillet Shear Test* Unless otherwise stated in the contract document, the fillet shear strength shall be not less than 60 percent of the lower of the minimum

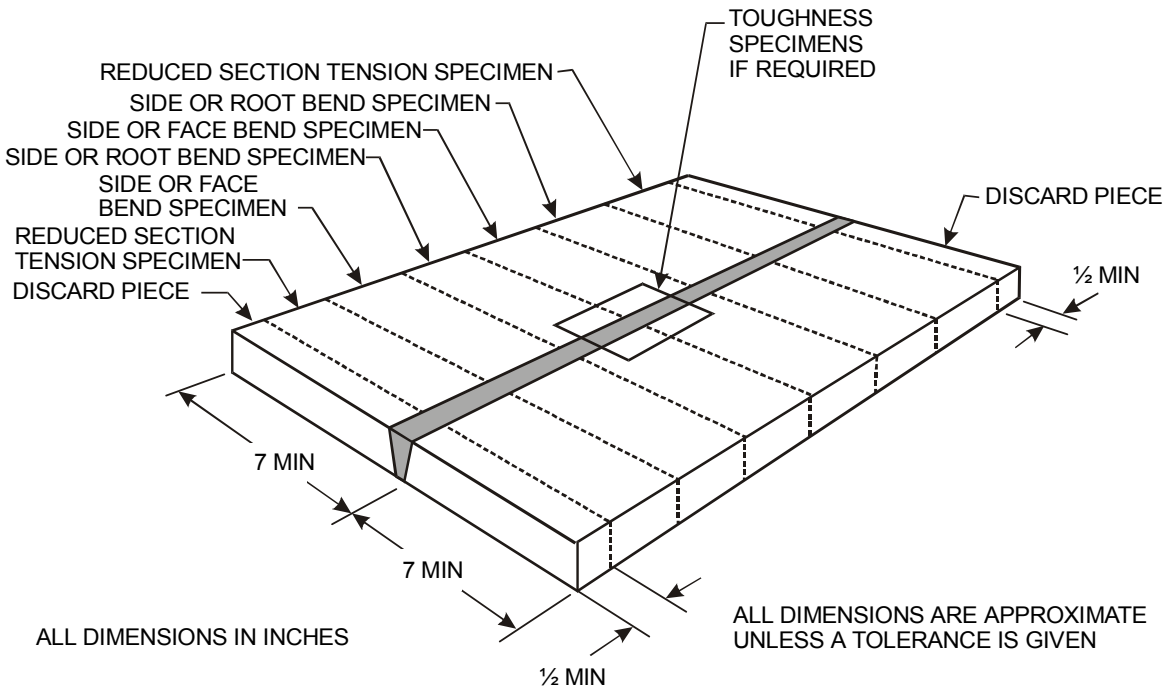

Notes:

1 Material thickness shall be determined in accordance with Table 4.3.

2. Metal up to and including 3/8 in. require 2 root and 2 face bend specimens. For metal over 3/8 in. thick, 4 side bend specimens shall be used. For all metal thicknesses, two reduced section specimens are required.

3. Dimensions for the specimen blanks and details of permitted bend tests are given in Appendix D.

4. A longer test plate will be required if toughness specimens are necessary. Toughness specimens should be located near the mid-length of the test plate.

Figure 4.11 — Location of Tension, Toughness, and Transverse Bend Specimens — Plate and Sheet (see 4.8.1)

specified tensile strength of the base metal or weld metal. If neither value is available, two specimen blanks of the base material shall be tension tested. The lowest value determined from these tests shall be the specified minimum tensile strength for qualification purposes. Four specimens are required (Figure 4.12).

4.10 Cladding Test Weldment and Acceptance Criteria

4.10.1 The test weldment shall be welded as shown in Figure 4.14. The surface of the weld shall be prepared for liquid penetrant examination. Liquid penetrant examination shall be performed in accordance with ASTM E 165, *Standard Test Method for Liquid Penetrant Examination.* The surface shall be evaluated based on the following acceptance criteria:

- (1) There shall be no linear indications longer than 1/16 in.
- (2) There shall be no more than four spherical indications in a line with dimensions greater than 1/16 in. and separated from each other by less than 1/16 in.

4.10.2 If the test weldment passes the liquid penetrant examination, specimen blanks shall be removed as shown, in Figure 4.14.

4.10.3 Bend specimens from cladding test weldments shall be prepared and bent in one of the guided-bend test fixtures shown in Appendix D.

4.10.4 Weld cladding bend specimens shall have no open discontinuity exceeding 1/16 in. in the cladding, measured in any direction on the convex surface, and no open discontinuities exceeding 1/8 in. in length at the weld interface after bending.

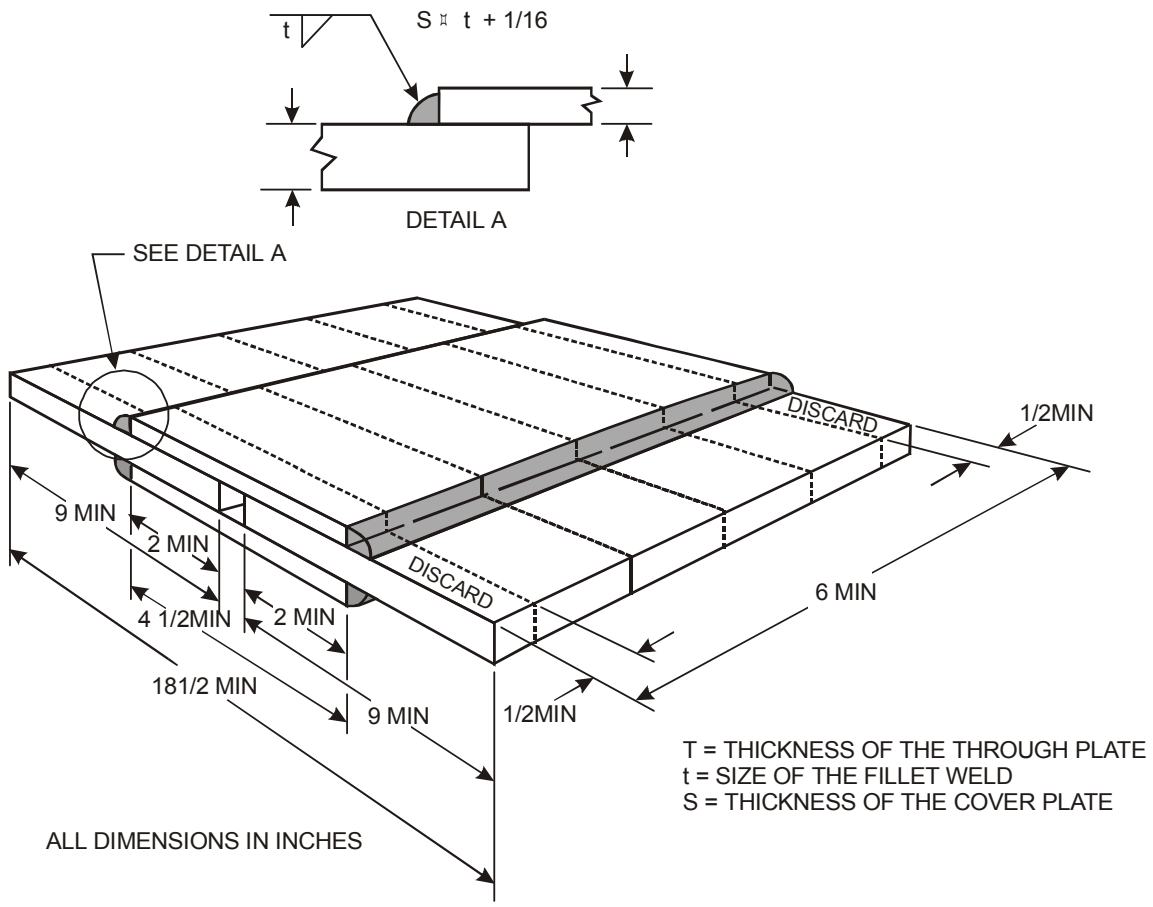

Note:
Length should be sufficient for the required number of specimens, which may be of any convenient width not less than 1 in.

Figure 4.12 — Location of Fillet Weld Shear and Macroetch Test Specimens (see 4.9.4 and 4.9.6)

4.10.5 A chemical analysis sample shall be removed as shown in Appendix D, and the results from the chemical analysis specimen shall meet the requirements of the engineering document.

4.11 Hardfacing Test Weldment and Acceptance Criteria

4.11.1 The test weldment shall be welded as shown in Figure 4.15. The hardfaced surface shall be prepared for hardness testing at the minimum weld metal thickness to be qualified. Hardness testing shall be performed at three locations, and the result of each test shall not be less than the minimum hardness specified in the engineering document.

4.11.2 If required by the engineering document, the test weldment shall then be sectioned as shown in Figure 4.15 and then macroetched. Both exposed faces shall then be polished and etched to provide a clear definition of the weld metal and the heat-affected zone.

Examination results from both faces shall meet the prescribed acceptance criteria.

4.11.3 If specified by the engineering document a sample for chemical analysis shall be obtained from one macroetch specimen as shown in Appendix D.

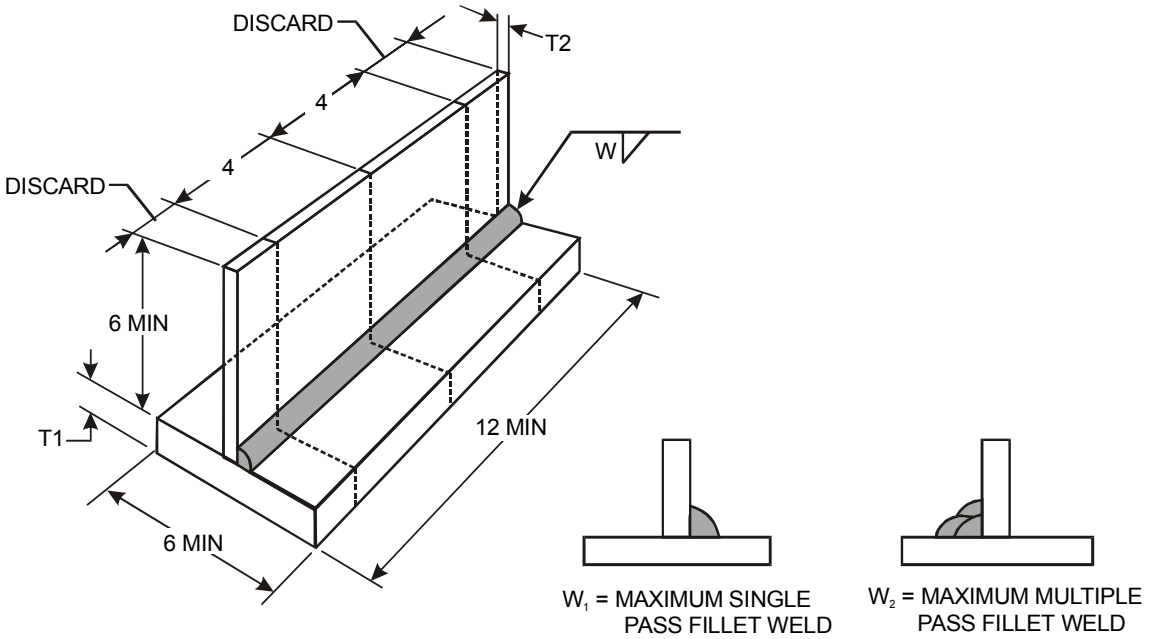

W	T1 min*	T2 min*	W	T1 min*	T2 min*
3/16	1/2	3/16	1/2	1	1/2
1/4	3/4	1/4	5/8	1	5/8
5/16	1	5/16	3/4	1	3/4
3/8	1	3/8	>3/4	1	1

* Note: Where the maximum plate thickness used in production is less than the value shown in the table, the maximum thickness of the production pieces may be substituted for T1 and T2.

Figure 4.13 — Fillet Weld Bend-Break and Macroetch Test Specimens (see 4.9.4 and 4.9.5)

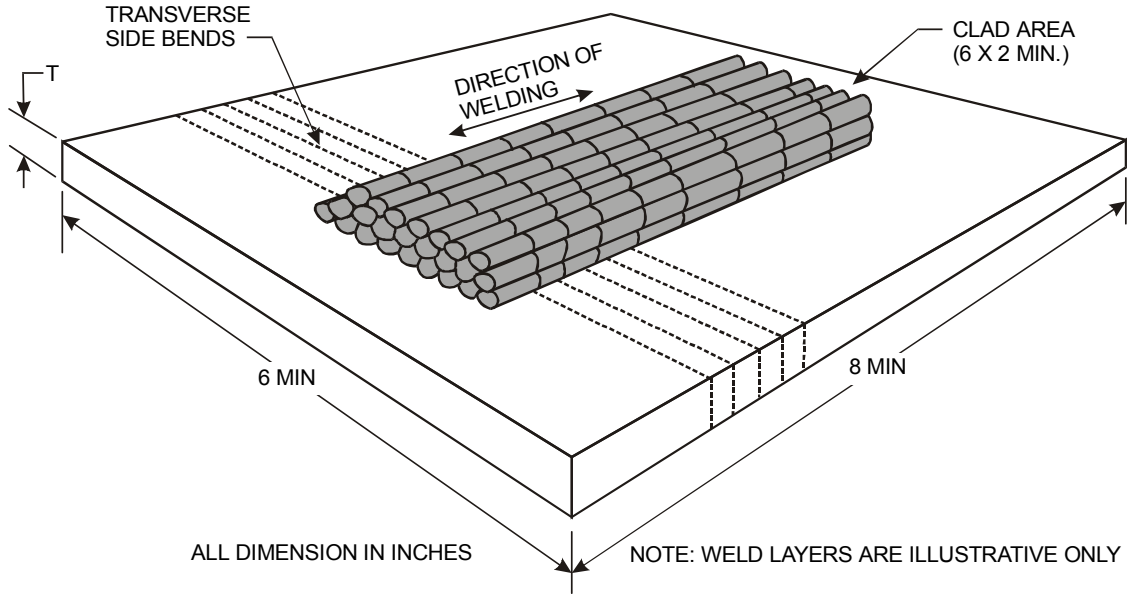

T = SEE TABLE 4.4

Figure 4.14 — Location of Cladding Test Specimens (see 4.10.1)

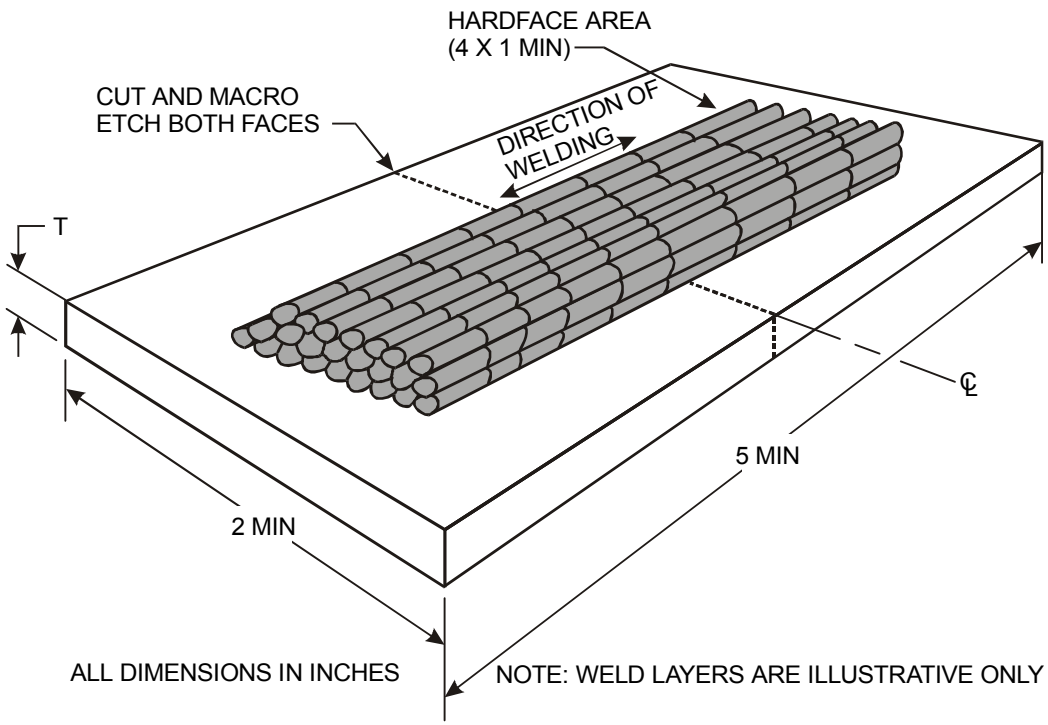

T = SEE TABLE 4.4

Figure 4.15 — Location of Hardfacing Test Specimens (see 4.11.1)

4.12 Sheet Metal Weldments and Acceptance Criteria

4.12.1 Sheet metal is defined as material less than or equal to 1/8" thickness. The weld specimen shall be visually examined per 4.12.2 and mechanically tested per AWS D9.1.

4.12.2 Completed groove or fillet test weldment(s) shall be visually examined and shall meet the following acceptance criteria:

- (1) No incomplete joint penetration or fusion.
- (2) Not more than one visible pore or inclusion exceeding 25% of the base metal thickness, shall be permitted in any 1 in. of weld.
- (3) Visible pores shall not extend through the weld thickness.
- (4) The weld reinforcement shall not exceed 1/8 in.
- (5) Undercut shall not exceed 15% of the base metal thickness.

4.13 Welding Procedure Specification Data

The following matrix indicates the welding data to be included in a WPS for each welding process. A WPS may be presented in any format, written or tabular, provided the data required in this matrix are included (see 4.3.4). The WPS may list variables recorded on the PQR within the full range permitted for a qualification variable and practical limits determined by the contractor for other than qualification variables.

	OFW	SMAW	GTAW	SAW	GMAW	FCAW	PAW	EBW	LBW
4.13.1 Joint Design									
1) Joint type and dimensions	X	X	X	X	X	X	X	X	X
2) Treatment of backside, method of gouging/ preparation	X	X	X	X	X	X	X	X	X
3) Backing material, if used	X	X	X	X	X	X	X	X	X
4.13.2 Base Metal									
1) Material number, subgroup	X	X	X	X	X	X	X	X	X
2) Thickness range qualified	X	X	X	X	X	X	X	X	X
3) Diameter (tubular only)	X	X	X	X	X	X	X	X	X
4.13.3 Filler Metal									
1) Classification, specification, F-number, or if not classified the nominal composition	X	X	X	X	X	X	X	X	X
2) Filler metal size or diameter	X	X	X	X	X	X	X	X	X
3) Flux classification				X					
4) Supplemental filler metal			X	X	X	X	X	X	X
5) Consumable insert and type			X				X		
6) Supplemental deoxidant								X	X
4.13.4 Position									
1) Welding positions(s)	X	X	X	X	X	X	X	X	X
2) Progression for vertical welding	X	X	X	X	X	X	X	X	X
4.13.5 Preheat and Interpass									
1) Preheat minimum		X	X	X	X	X	X	X	X
2) Interpass temperature maximum (if applicable)		X	X	X	X	X	X	X	X
3) Preheat maintenance		X	X	X	X	X	X	X	X
4.13.6 Heat Treatment									
1) PWHT temperature and time	X	X	X	X	X	X	X	X	X
4.13.7 Shielding Gas									
1) Torch shielding gas and flow rate range			X		X	X	X		X
2) Purge/backing gas and flow rate range			X		X		X		
3) Fuel gas and flame type (oxidizing, neutral, or reducing)	X								
4) Environmental shielding and vacuum pressure								X	
4.13.8 Electrical									
1) Current (or wire feed speed), current type, and polarity		X	X	X	X	X	X	X	
2) Voltage range (except for manual welding)			X	X	X	X	X	X	
3) Beam focus current pulse frequency range, and filament type, shape and size								X	
4) Type and diameter of tungsten electrode			X				X		
5) Short circuit					X				
6) A change to and from pulsed current			X		X	X	X		
4.13.9 Variables (see 4.14.9)									
1) Welding process	X	X	X	X	X	X	X	X	X
2) For mechanized or automatic, single or multi electrode and spacing,			X	X	X	X	X	X	
3) Single or multi pass	X	X	X	X	X	X	X	X	X
4) Cleaning	X	X	X	X	X	X	X	X	X
5) Peening		X	X	X	X	X	X		
6) Conventional or keyhole technique							X	X	X
7) Standoff distance							X	X	X
8) Stringer or weave bead		X	X	X	X	X	X		
9) Travel-speed range for mechanized or automatic welding			X	X	X	X	X	X	X

4.14 Procedure Qualification Variables

This matrix lists the procedure qualification variables to be recorded on the PQR for each welding process. A change in a procedure qualification variable requires requalification of the procedure. Details related to joint design (4.14.1) do not apply to Armor Welding. The PQR shall list the values of the actual variables used, within the limits of the range employed. The key to the entries in the body of the matrix is as follows:

- Q - Qualification variable for all applications
- T - Qualification variable for toughness applications
- C - Qualification variable for weld cladding applications
- H - Qualification variable for hardfacing applications

	OFW	SMAW	GTAW	SAW	GMAW	FCAW	PAW	EBW	LBW
4.14.1 Joint Design									
1) A change in groove type (V-groove, U-groove, single bevel, etc., exceeding —									
A. A decrease in groove angle greater than 5°	Q	Q	Q	Q	Q	Q	Q	Q	Q
B. A decrease in root opening greater than 1/16 in.	Q	Q	Q	Q	Q	Q	Q	Q	Q
C. An increase in root face greater than 3/32 in.	Q	Q	Q	Q	Q	Q	Q	Q	Q
2) A change from a fillet to a groove weld	Q	Q	Q	Q	Q	Q	Q		
3) A change in the M-number of backing	Q	Q	Q	Q	Q	Q	Q	Q	Q
4) The addition of thermal backgouging on M-1 heat-treatable base metal	Q	Q	Q	Q	Q	Q	Q	Q	Q
5) An increase in fit-up gap beyond that used in the qualification test								Q	Q
4.14.2 Base Metal									
1) A change in base metal thick-ness beyond the range permitted in 4.4.1	Q	Q	Q	Q	Q	Q	Q	Q	Q
2) A change from one M-number to another M-number or to an unlisted base metal, except as 4.3 and Table 4.6 permits.	Q	Q	Q	Q	Q	Q	Q	Q	Q
3) A change from one M-number group to any other M-number group		T	T	T	T	T	T	Q	Q
4) A change from an uncoated metal to a coated (such as painted or galvanized) metal unless the coating is removed from the weld area prior to welding, but not vice versa.	Q	Q	Q	Q	Q	Q	Q	Q	Q
4.14.3 Filler Metals									
1) A change from one F-number to any other F-number or to any filler metal not listed in Table 4.8	Q	Q	Q	Q	Q	Q	Q	Q	Q
2) For surfacing, a change in the chemical composition of the weld metal. Each layer shall be considered independent of other layers.	C H	C H	C H	C H	C H	C H	C H		
3) A change in AWS filler metal classification	Q	T	T	T	T	T	T	T	T
4) An increase in filler metal tensile strength	Q	Q	Q	Q	Q	Q	Q	Q	Q

	OFW	SMAW	GTAW	SAW	GMAW	FCAW	PAW	EBW	LBW
5) If the weld metal alloy content is largely dependent upon the composition of the flux, any change in the welding procedure which would result in the important weld metal alloying elements being outside the specified chemical composition range of the WPS.				Q					
6) A change in the cross-sectional area of filler metal added (excluding buttering) of ±10%.								Q	Q
7) An increase in the filler metal diameter >1/32 in.	Q	Q	Q				Q		
8) An increase in the filler metal diameter >1/64 in.				Q	Q	Q			
9) The addition or deletion of filler material			Q				Q	Q	Q
10) A decrease in thickness or a change in the nominal chemical composition of surfacing or buttering beyond that qualified.	C H	C H	C H	C H	C H	C H	C H	C H	C H
11) A change of filler metal/ electrode nominal size/shape in the first layer.		C H		C H	C H	C H			
12) Addition or deletion of supplementary filler metal (powder or wire), or a change of 10% in the amount	Q	T	T	T	Q	Q	Q	T	Q
13) A change from single to multiple supplementary filler metal or vice versa.	C H		C H	C H	C H	C H	C H		
14) Addition or deletion, or a change in the nominal amount or composition of supplementary metal (in addition to filler metal) beyond that qualified.				Q	Q				
15) A change from wire to strip electrodes and vice versa.				Q					
16) A change from one AWS electrode-flux classification listed to any other electrode flux classification, or to an unlisted electrode-flux classification. A variation of 0.5% of the molybdenum content of the weld does not require requalification				Q					
17) A change in the weld metal thickness beyond that permitted in 4.4	Q	Q	Q	Q	Q	Q	Q	Q	Q
18) The addition or deletion, or a change in the nominal amount or composition of supplementary deoxidation material beyond that qualified.								Q	Q
4.14.4 Position									
1) A change in position not qualified by Table 4.5 and a change in vertical welding progression.	Q	Q	Q	Q	Q	Q	Q		
2) The addition of a welding position, except that positions other than flat also qualify for flat.	C H	C H	C H	C H	C H	C H	C H		
4.14.5 Preheat and Interpass Temperature									
1) A decrease in preheat of more than 25° F from that qualified		Q	Q	Q	Q	Q	Q	Q	Q
2) An increase of more than 100° F in the maximum interpass temperature from that recorded on the PQR		T	T	T	T	T	T		

	OFW	SMAW	GTAW	SAW	GMAW	FCAW	PAW	EBW	LBW
4.14.6 Post Weld Heat Treatment 1) Omission or inclusion of PWHT	Q	Q	Q	Q	Q	Q	Q	Q	Q
4.14.7 Shielding Gas 1) A change in shielding gas from a single gas to any other shielding gas or mixture of gas, or in the specified nominal composition >5% of a gas mixture, or to no gas			Q		Q	Q	Q		Q
2) A change of shielding environment from vacuum to an inert gas								Q	Q
3) An increase in vacuum pressure								Q	
4) The addition, deletion, a 5% flow rate change for any gas used in the process, or a change in the orientation of the plasma removing gas jet relative to the work piece (e.g., coaxial transverse to beam).									Q
4.14.8 Electrical Characteristics 1) A change in amperage for each diameter used > 10 % increase or decrease.		Q		Q	Q	Q			
2) A change in voltage for each diame-ter used >7% increase or decrease.		Q		Q	Q	Q			
3) An increase in heat input or volume of weld metal deposited per unit length of weld, over that qualified, except when a grain refining austeni-tizing heat treatment is applied after welding. The increase may be measured by either of the following: a) Heat input (J/in.) $= \frac{\text{Volts} \times \text{Amps} \times 60}{\text{TravelSpeed(in/min)}}$ b) Weld Metal Volume - An in-crease in bead size, or a de-crease in the length of weld bead per unit length of electrode.		T Q*	T Q*	T	T Q*	T	T	T	T
4) A change exceeding ±2% in the voltage from that qualified								Q	
5) A change exceeding ±5% in the beam or beam focus current from that qualified								Q	
6) A change in the beam pulsing frequency or duration from that qualified								Q	
7) A change in filament type, size, or shape								Q	
8) A change in the mode of metal transfer from short circuiting to globular, spray, or pulsed and vice versa					Q	Q			
4.14.9 Other Variables 1) A change in welding process	Q	Q	Q	Q	Q	Q	Q	Q	Q
2) A change from single electrode to multiple electrodes in the same weld pool, and vice versa				Q	Q	Q	Q		
3) A change from multiple-pass per side to single pass per side		T	T	T	T	T	T	Q	Q
4) A change from the conventional welding to keyhole welding, or vice versa, or, the inclusion of both techniques unless each has been individually qualified							T		
5) A change exceeding ±5% in gun-to-workpiece distance, or axis of beam angle related to work								Q	

	OFW	SMAW	GTAW	SAW	GMAW	FCAW	PAW	EBW	LBW
6) A change exceeding ±20% in oscillation length or width from that qualified, or the addition of a cosmetic wash pass								Q	
7) A change exceeding ±10% in travel speed for mechanized or automatic welding			C H	C H	C H	C H	C H		
* Required for A514 and A517 only									
8) A change from stringer bead to weave bead for manual welding		C H	C H	C H	C H	C H	C H		
9) A change from a stringer bead to a weave bead in vertical uphill welding.		T	T		T	T	T		
10) A change in the type of fuel or type of flame	Q								
11) A change from single sided welds to double sided or vice versa								Q	Q

Part C

Performance Qualification

4.15 General

4.15.1 Qualification of welders and welding operators requires that a weldment shall be made according to a qualified WPS. The weldment shall be prepared and tested in accordance with the requirements of this specification. If the WPS requires PWHT it may be omitted at the discretion of the qualifier.

4.15.3 Personnel currently qualified by the contractor to meet the requirements of other codes or specifications may be considered qualified provided the basis for their qualification meets all requirements specified in this code.

4.15.6 The welder or welding operator undertaking performance qualification tests shall be under the full supervision of the qualifier during the welding of test weldments.

4.15.7 The qualification test for each welder or welding operator shall be documented by the qualifier for both acceptable and unacceptable tests. There is no required format for Performance Qualification Test Records. A sample form may be found in Appendix C. Documentation shall, at a minimum, include the following:

- (1) WPS identification ,
- (2) Inclusion of the qualification variables in 4.18 Performance Qualification Variables,
- (3) Test and examination methods used, results and the limits of qualification for the welder or welding operator.

4.15.7.1 Per the requirements of 4.1.4.2, robotic programming validation shall be accomplished by verifying that the first weldment meets the established drawing and inspection criteria.

4.15.8 Acceptance of test results is the responsibility of the qualifier. Qualification records shall be signed and dated by the qualifier. Qualification records shall reference and may include mechanical test and nondestructive examination test reports that are signed by others. Examination results will be retained by the contractor after acceptance by the qualifier. The examination methods required are specified in Table 4.7 and the acceptance criteria for each method are provided in 4.17.

4.16 Testing

4.16.1 Tests shall be performed using a filler metal which has an assigned F-number listed in Table 4.8. A test using a filler metal not assigned an F-number shall qualify only for that filler metal, except that welding operator qualification tests made using any filler metal will qualify for any other filler metal.

Table 4.6
Table 3.1 and Appendix A Steels Qualified by PQR Steels (see 4.3.8)

PQR Base Metal (Notes 1, 3, and 4)	WPS Base Metal Group Combinations Permitted by PQR
A) Any "Group I" steel to itself B) Any "Table M1" Group 2 steel **to** itself Any combination of A) and B)	Any combination of A) and B)
C) "Group II" steel to itself D) Any "Table M1" Group 2 steel **to** itself Any combination of C) and D)	Any combination of A) and B) Any combination of C) and D)
Any specific "Group III", "Table M1" Group 3 Appendix A steel **to** Any "Group I" or "Table M1" Group 1 steel	The specific "Group III", "Table M1" Group 3 or Appendix A steel **to** Any "Group I" or "Table M1" Group 1 steel
Any specific "Group III", "Table M1" Group 3 or Appendix A steel **to** Any "Group II" or "Table M1" Group 2 steel	The specific "Group III", "Table M1" Group 3 or **to** Any "Group I" or "Group II" or "Table M1" Group1 or Group 2 steel
Joining of the following: Any "Group III" steel **to** itself Any "Group III" steel **to** another "Group III steel Any "Table M1" Group 3 steel **to** itself Any "Table M1" Group 3 steel **to** another "Table M1" Group 3 steel Any Appendix A steel **to** itself Any Appendix A steel **to** another "Annex M" steel	Steels shall be of the same material specification, grade/type, and minimum yield strength as the steels listed on the PQR (Note 2).
Any combination of AWS Group III and Appendix A steels	Only the specific combination of steels listed on the PQR
Any unlisted steel **to** Any steel listed in Table 3.1 or Appendix A	Only the specific combination of steels listed on the PQR
For "Table M(number)" materials other than "Table M1" or "Table M11" steels "Table M(number)" Group Number steel **to** the same "Table M(number) Group Number steel	The "Table M(number) Group Number qualified and any lower group number steels in the same "Table M(number)" classification within paragraph 4.7 guidelines
Any "Table M(number) steel **to** An unlisted steel alloy	Only the specific combinations in the PQR
"Table M11" steels **to** "Table M11" steels	"Table M11" steels of the same group number listed on the PQR
UNS assigned steels to the same or dissimilar UNS assigned steels	The UNS Numbers listed on the PQR and any "Table M(number)" associated with the UNS Numbers

Notes:
1. Groups I through III are found in Table 3.1.
2. Reduction in yield strength with increased metal thickness where permitted by the steel specification.
3. Tables of M-number steels are located in Appendix A.

Table 4.7
Examination Requirements for Performance Qualification (see 4.15.8)

	Pipe or Plate		Sheet metal		Surfacing	
Type of Test	Groove	Fillet	Groove	Fillet	Cladding	Hardfacing
Visual Examination	Yes	Yes	Yes	Yes	Yes	Yes
Radiography	Note a		Note a			
Bend Test	Yes[a]		Yes[a]		Yes	
Break-Bend Test		Yes[b]		Yes		
Macro-Examination		Yes[b]				Yes

Notes:

a. Radiography may be substituted in lieu of bend testing, except for joints welded by GMAW-S.

b. The requirement for a Bend-Break test and macro is waived for welders who successfully complete fillet procedure qualification tests (where shear tests, plus visual and macro examinations are used).

Table 4.8
Electrode Classification Groups (see 4.16.1)

Group Designation	AWS Electrode Classification	AWS Classification Number
F13	A5.26	EGXXTXX, EGXXSXXX
F12	A5.25	FESXX-EXXXX-EW, ENXX, FESXX-EXXXX
F11	A5.22	EXXXT-X
F10	A5.20 and.29	EXXT-X
F9	A5.9	ERXX
F8	A5.18 and A5.28	ERXXS-X,ERXXX-X, E-XXX-X
F7	A5.17 and A5.23	FXX-XXXX(FXX-EXXX),FXX-EXXX-X, FXX-ECXXX-X, FXX-EXXX-XN, and FXX-ECXXX-XN
F5	A5.4 Cr-Ni	EXXX15,EXXX16,EXX17,EXX25,EXX26
F4	A5.1 and A5.5	EXX15, EXX16, EXX18, EXX15-X, EXX16-X, EXX18-X
F3	A5.1 and A5.5	EXX10, EXX11, EXX10-X, EXX11-X
F2	A5.1 and A5.5	EXX12, EXX13, EXX14, EXX13-X
F1	A5.1 and A5.5	EXX20, EXX24, EXX27, EXX28, EXX20-X, EXX27-X

Table 4.9
Allowable Base Metals for Performance Qualification
(See 4.18.1.1)

Test Weldment Material*	Qualifies for Production Welding Materials
M-1 through M-7, M11	M-1 through M-7, M11

*: If materials not listed in Appendix A are used for qualification tests, the welder or welding operator shall be qualified to weld only on the material used in the test weldment.

4.16.2 Test coupons welded in the specific test positions shown in Figures 4.3 through 4.6 qualify the welder to weld plate, sheet, or pipe as permitted in Table 4.10. Weldment orientation other than the specific test positions shown in Figures 4.3 through 4.6 is permitted, but such tests qualify only for the orientation tested. Figures 4.1 and 4.2 show the permitted angular deviation in weld axis inclination and weld face rotation for each test position passed.

4.16.3 Figures 4.16 through 4.25 illustrate the various performance test weldments which are permitted, and give the locations for the removal of required specimen blanks.

4.16.4 Cladding.

The clad weldment shall be visually examined in accordance with 4.17. If acceptable, the clad surface shall be machined to the minimum weld

metal thickness specified in the WPS. Two bend specimens are required except that 6G cladding pipe performance qualification requires three bend specimens, and the 2G cladding pipe performance qualification requires only one bend specimen.

4.16.5 Hardfacing

Prior to removing test specimen blanks identified in Figure 4.25, the hardfaced surface shall be visually examined in accordance with the Referencing Document. Unless otherwise specified in the Referencing Document one transverse macro shall be removed as shown in Figure 4.25 and the weld shall show complete fusion.

Table 4.10
Welder Qualification[1] — Production Welding Positions Qualified by Plate and Tube Tests (see 4.16.2)

Qualification Test			Production Plate Welding Qualified			Production Pipe Welding Qualified				
	Weld Type	Positions[2]	Groove CJP	Groove PJP	Fillet	Butt-Groove CJP	Butt-Groove PJP	T-, Y-, K-Groove CJP	T-, Y-, K-Groove PJP	Fillet
PLATE	Groove[3]	1G 2G 3G 4G 3G + 4G	F F, H F, H, V F, OH All	F F, H F, H, V F, OH All	F F, H F, H, V F, OH All	F F, H F, H, V F, OH All Note 4	F F, H F, H, V F, OH All Note 4		F F, H F, H, V F, OH All Notes 4,6	F F, H F, H, V F, OH All
	Fillet	1F 2F 3F 4F 3F + 4F			F F, H F, H, V F, OH All					F F, H F, H, V F, OH All
	Plug	Qualifies Plug and Slot Welding for Only the Positions Tested								
TUBULAR	Pipe Groove[3]	1G Rotated 2G 5G 6G 3G + 5G Note 7	F F, H F, V, OH All All	F F, H F, V, OH All All	F H F, H F, V, OH All All	F F, H F, V, OH All All	F F, H F, V, OH All All		F F, H F, V, OH All All Notes 6	F H F, H F, V, OH All All
		6GR (Fig. 4.5)	All	All	All	All Notes 5,	All	All Notes 6	All Notes 6	All
		6GR (Fig. 4.5)	All	All	All	All Notes 5	All	All Notes 6	All Notes 6	All
	Pipe Fillet	1F Rotated 2F 2F Rotated 4F 5F			F H F, H F, V, OH All All					F H F, H F, V, OH All All

CJP — Complete Joint Penetration; PJP — Partial Joint Penetration; (R) — Restriction

Notes (Notes shown at the bottom of a column box apply to all entries.):

1. Not applicable for welding operator qualification (see 4.18).
2. See Figures 4.3, 4.4, 4.5, and 4.6.
3. Groove weld qualification also qualifies plug and slot welds for the test positions indicated.
4. Only qualified for pipe over 24 in. in diameter with backing, backgouging, or both.
5. Not qualified for joints welded from one side without backing, or welded from two sides without backgouging.
6. Not qualified for welds having groove angles less than 30°
7. Qualification for welding production joints without backing or backgouging requires using the Figure 4.7 joint detail. For welding production joints with backing or backgouging, the Figure 4.8 joint detail can be used for qualification.

4.17 Examination Procedures and Acceptance Criteria

Unless otherwise specified in the referencing document, examination procedures and acceptance criteria shall be as specified in the following paragraphs.

4.17.1 Visual Examination.

The test weld may be examined visually by the qualifier at any time, and the test terminated at any stage if the necessary skills are not exhibited. The completed test weld shall be visually examined without magnification.

4.17.1.1 Test Weldments

Acceptance criteria for visual examination of test weldments shall be as follows:

- (1) Plate and Pipe Weldments

  (a) No cracks or incomplete fusion.

  (b) No incomplete joint penetration in groove welds, except where partial joint penetration groove welds are specified.

  (c) Undercut depth shall not exceed the lesser of 10% of the base metal thickness or 1/32 in.

  (d) Face reinforcement or root reinforcement shall not exceed 1/8 in.

  (e) No single pore shall exceed 3/32 in. diameter.

  (f) For fillet weld tests, concavity or convexity of the weld face shall not exceed 1/16 in. The two fillet leg sizes shall not differ by more than 1/8 in.

- (2) Cladding/Hardfacing Weldments

  (a) The appearance of the weld shall satisfy the qualifier that the welder is skilled in applying the WPS used for the test weldment.

- (3) Sheet Metal Weldments

  (a) No cracks or incomplete fusion.

  (b) No melt-through (burn-through) which results in a hole.

  (c) No weld reinforcement for groove welds or convexity for fillet welds that exceed 1/8 in.

  (d) No visible porosity or inclusions.

4.17.2 Radiographic Examination.

Unless otherwise specified in the engineering document the radiographic procedure and acceptance criteria shall be in accordance with Appendix B, Table B3.3, Level 2.

4.17.3 Bend Tests

Specimens shall be bent in one of the guided-bend test fixtures shown in Appendix D.

4.17.3.1 For face bend specimens, the weld face side shall be on the convex side of the bend specimen. For root bend specimens, the weld root side shall be on the convex side of the bend specimen. For transverse bend specimens, the weld metal

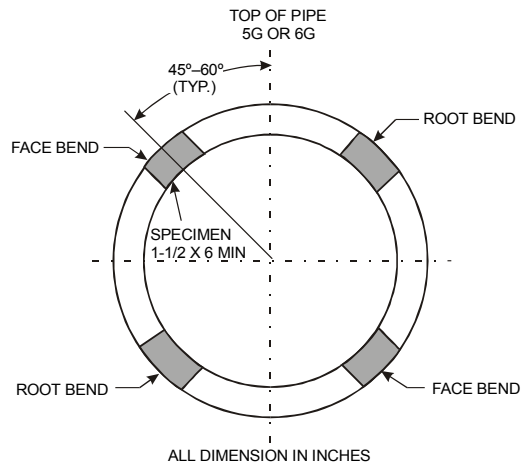

Note: For pipe 3/8 in. thick and over side bends shall be taken. See Table 4.3 for diameter and thickness limitations.

Figure 4.16 — Location of 1G, 2G, 5G, and 6G Bend Specimens —Pipe Groove Weldment (see 4.16.3)

and heat-affected zone shall be completely within the bent portion of the specimen after bending.

4.17.3.2 Bend specimens from groove welds shall have no open discontinuity exceeding 1/8 in., measured in any direction on the convex surface of the specimen after bending. Cracks occurring on the corners of the specimen during bending shall not be considered, unless there is definite evidence that they result from slag inclusions or other discontinuities.

4.17.3.3 For weld cladding, no open discontinuity exceeding 1/16 in. measured in any direction on the surface shall be permitted in the cladding, and no open defects exceeding 1/8 in. in length shall be permitted at the weld interface after bending.

4.17.4 Fillet-Weld Bend-Break Tests.

Specimens shall be bent with the weld root in tension until the specimen either fractures or until it is bent flat upon itself. The specimen shall be accepted if:

- (1) The specimen does not fracture, or
- (2) If the fillet fractures, the fractured surface shall exhibit no cracks or incomplete root fusion and no inclusion or porosity in the fracture surface exceeding 3/32 in. in its greatest dimension, or

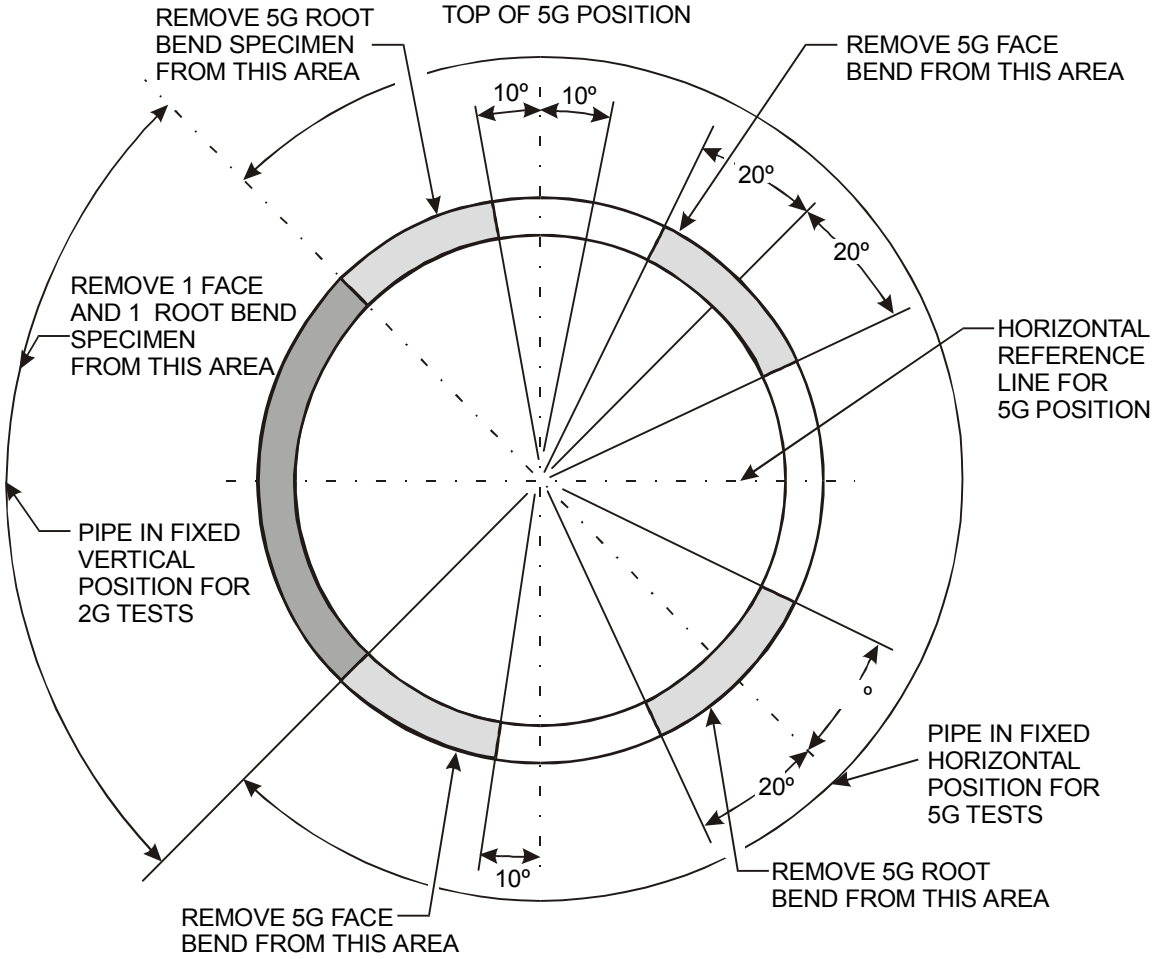

Notes:

1. For pipe 3/8 in. thick and over side bends shall be taken..
2. Six specimen blanks shall be removed from the appropriate locations shown, 1 face and 1 root bend specimen from the 2G portion of the test weldment and 2 face and 2 root bend specimens from the 5G portion of the weldment.
3. Dimensions for the specimen blanks and details of bend tests are shown in Appendix D.

Figure 4.17 — Location of Bend Specimens — Combined Positions 2G and 5G (see 4.16.3)

- (3) The sum of the greatest dimension of all inclusions and porosity do not exceed 3/8 in. in the specimen length.

4.17.5 Macro Examination.

Specimens shall be polished and etched to provide a clear definition of the weld metal and heat-affected zone. Visual examination of etched surfaces shall be without magnification.

(1) *Fillet Welds.* Both weld cross-sections of the macroetch specimen from the fillet weld shall be examined. The weld cross-section shall show no incomplete fusion and no cracks. Discontinuities at the weld root, not exceeding 1/32 in., shall be acceptable.

(2) *Hard facing.* The specimen shall show complete fusion.

4.18 Performance Qualification Variables

4.18.1 Qualification on one WPS will also qualify for welding with any other WPS within the limits given in Table 4.10 and 4.18.1.1.

4.18.1.1 Welders

A change in any variable listed below from that which was used in a welder's qualification test will require requalification of that welder:

- (1) a change in welding process
- (2) the deletion of backing for pipe and tube
- (3) a change in filler metal from any F-number to F-9 or vice versa.
- (4) a change of a SMAW electrode to a higher F-number
- (5) a change in base metal except as permitted in Table 4.9.
- (6) a change in the type of fuel gas (OFW)
- (7) a change in position from that qualified, except as permitted in 4.16.2.
- (8) a change in vertical weld progression from uphill to downhill, or vice versa for any pass except root passes that are completely removed by back gouging or final passes used to dress the final weld surface.
- (9) for GMAW, a change from spray transfer, globular transfer, or pulsed spray welding to short-circuiting transfer, or vice versa.
- (10)for GMAW, GTAW, or PAW, omission or addition of consumable inserts, or deletion of root shielding gas except for double welded butt joints, partial penetration groove, and fillet welds
- (11)a change in material thickness or diameter from that tested except as permitted in Tables 4.11, 4.12, 4.13, and 4.14

4.18.1.2 Welding Operator

A change in any variable listed below from that which was used in the welding operator's qualification test will require requalification of the welding operator:

- (1) a change in welding process
- (2) a change in position except as permitted in Table 4.10
- (3) deletion of consumable inserts
- (4) for GMAW welding, a change from any transfer mode to the short-circuiting mode
- (5) a change in base metal except as permitted in Table 4.9.

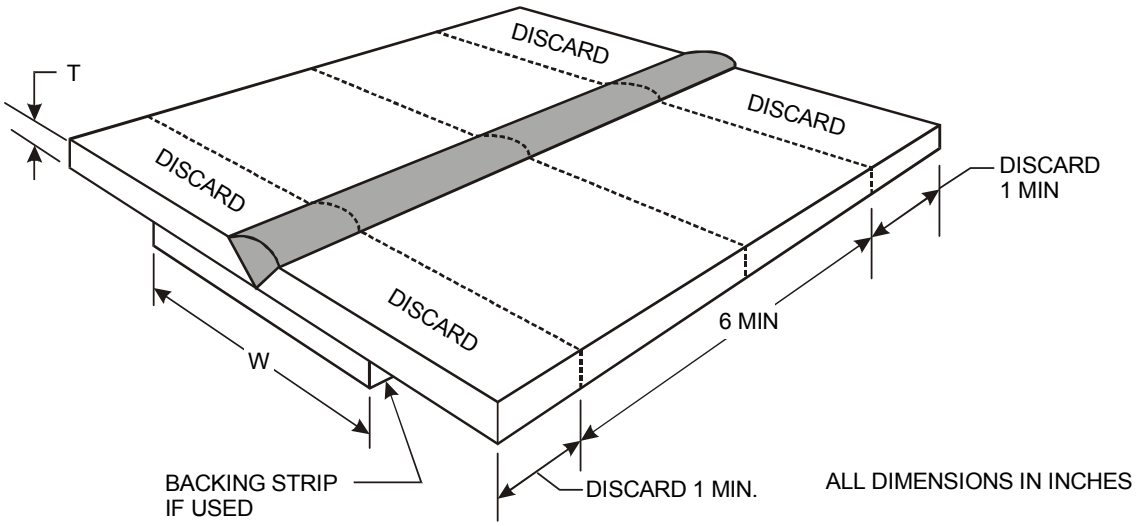

T = SEE TABLE 4.12

Notes:

1. Longitudinal bend specimens as shown in Figure 4.19 may be substituted for transverse bend specimens for welds that differ markedly in bending behavior between base metals or between base metal and weld metal.
2. For plate 3/8 in. thick and over side bends shall be taken. The specimens and their order of removal shall be the same for weldments with or without the optional backing strip shown in these drawings.
3. Dimensions of test specimens and detail of test fixtures are shown in Appendix D.
4. Backing width (W) shall be 3 in. minimum if radiography is used.

Figure 4.18 — Location of Transverse Bend Specimens — Plate Groove Weldment (see 4.16.3)

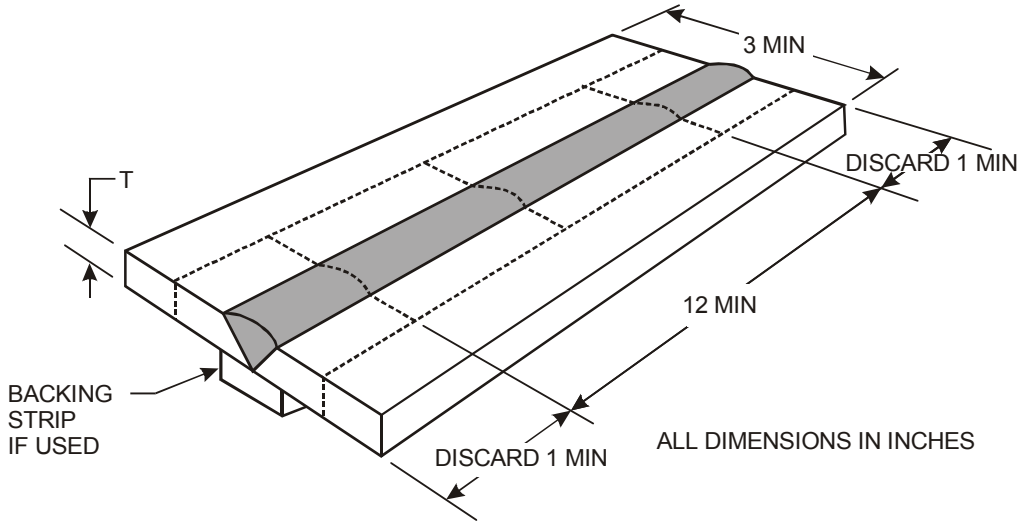

NOTE: DIMENSIONS OF TEST SPECIMENS AND TEST FIXTURES ARE SHOWN IN APPENDIX D

T = SEE TABLE 4.12

Figure 4.19 — Location of Longitudinal Bend Specimens — Plate Groove Weldment (see 4.16.3)

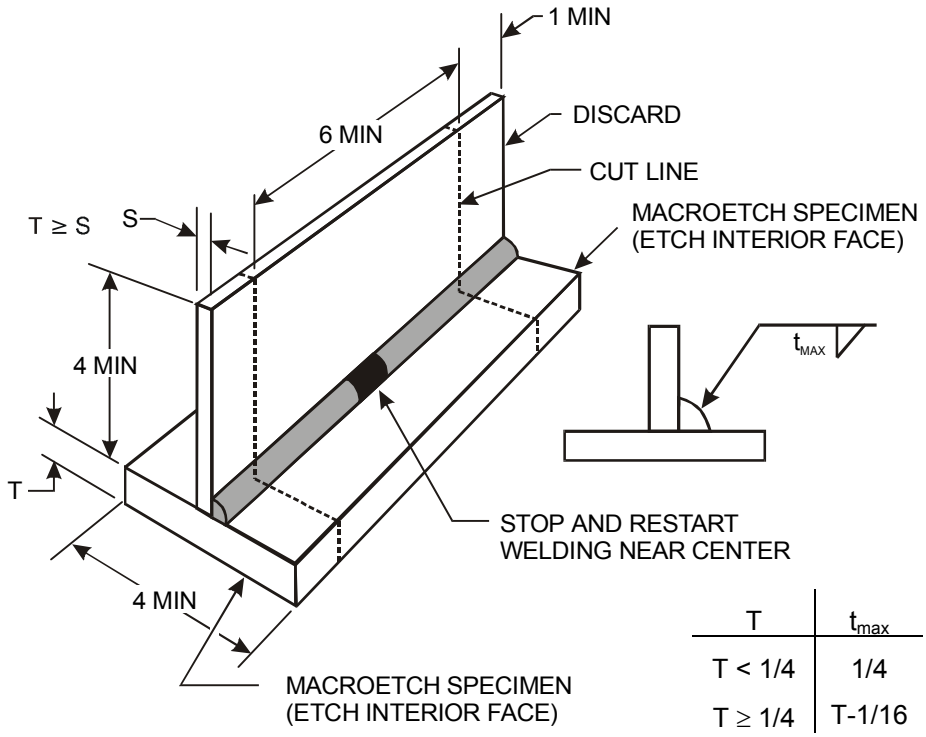

T	t_{max}
T < 1/4	1/4
T ≥ 1/4	T-1/16

ALL DIMENSIONS IN INCHES

T = SEE TABLE 4.12

Notes:

1 The center 6 in. segment shall be bent with the root in tension until it fractures or bends flat.

2. One of the end pieces shall be selected for the macroetch specimen.

Figure 4.20 — Location of Fillet Test Specimens — Plate (see 4.16.3)

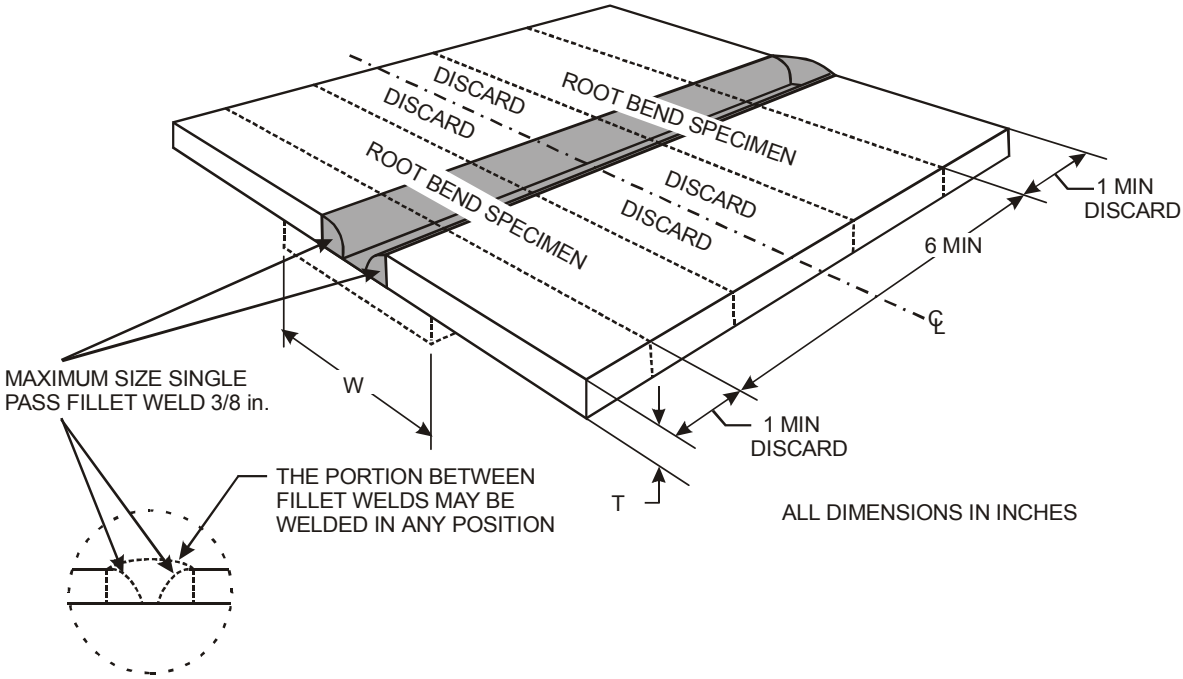

T = SEE TABLE 4.12

Notes:

1. Longitudinal bend specimens shown in Figure 4.19 may be substituted for transverse bend specimens for welds that differ markedly in bending behavior between two base metals or between base metal and weld metal.
2. Dimensions of test specimens and test fixtures are shown in Appendix D.
3. Backing width (W) shall be 3 in. minimum if radiography is used.

Figure 4.21 — Location of Fillet Test Specimens — Alternate Weldment — Plate (see 4.16.3)

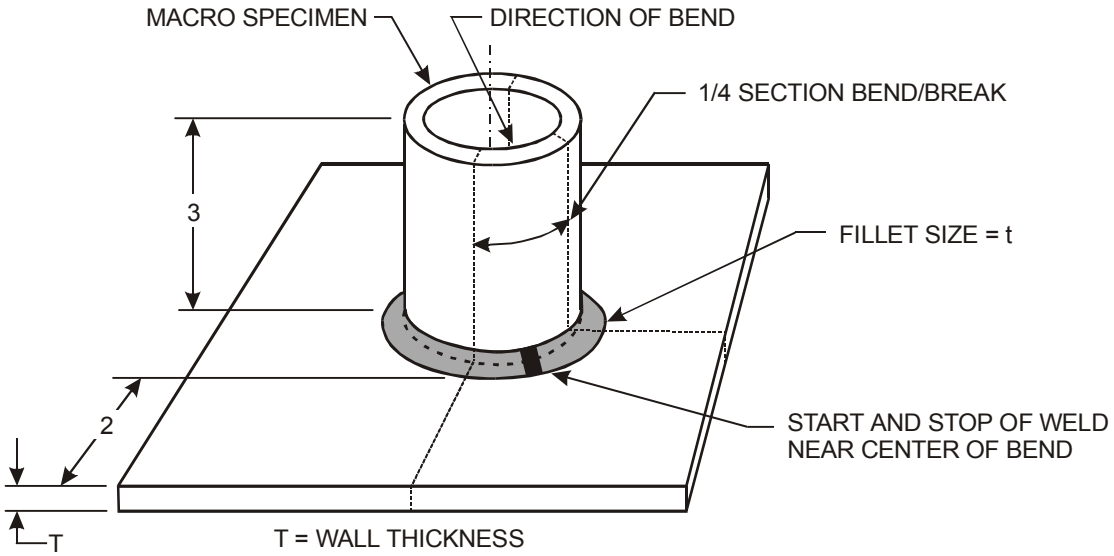

T = SEE TABLE 4.12

Figure 4.22 — Location of Fillet Test Specimens — Pipe (see 4.16.3)

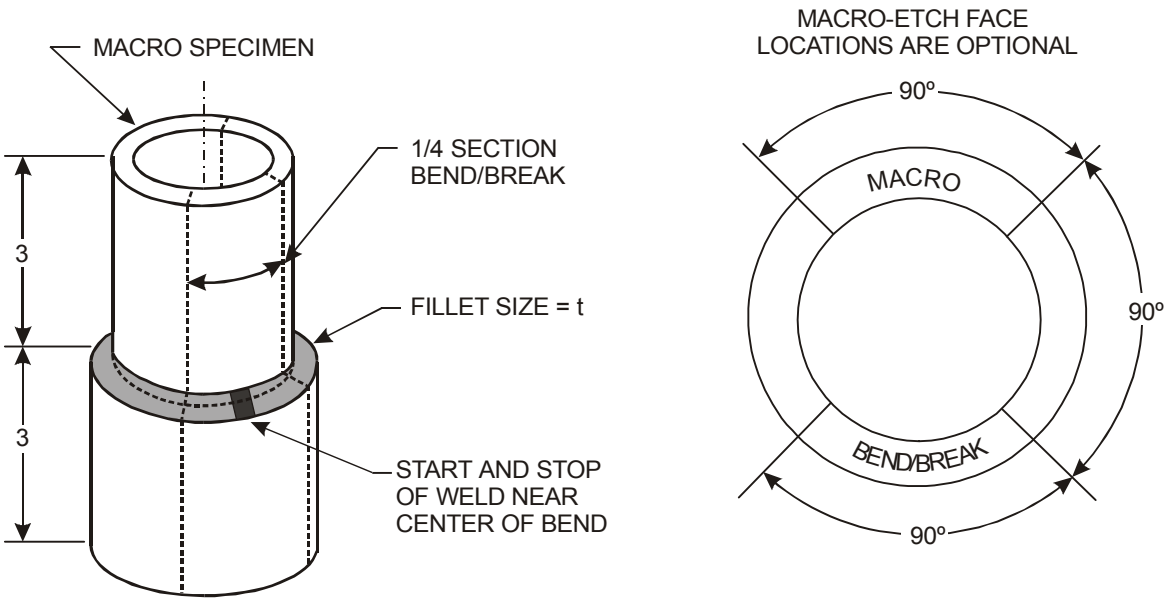

Note: the bend/break specimens shall be removed from the lower 90 degrees for 5F weldments.

T = SEE TABLE 4.12

Figure 4.23 — Location of Fillet Test Specimens — Alternate Weld — Pipe (see 4.16.3)

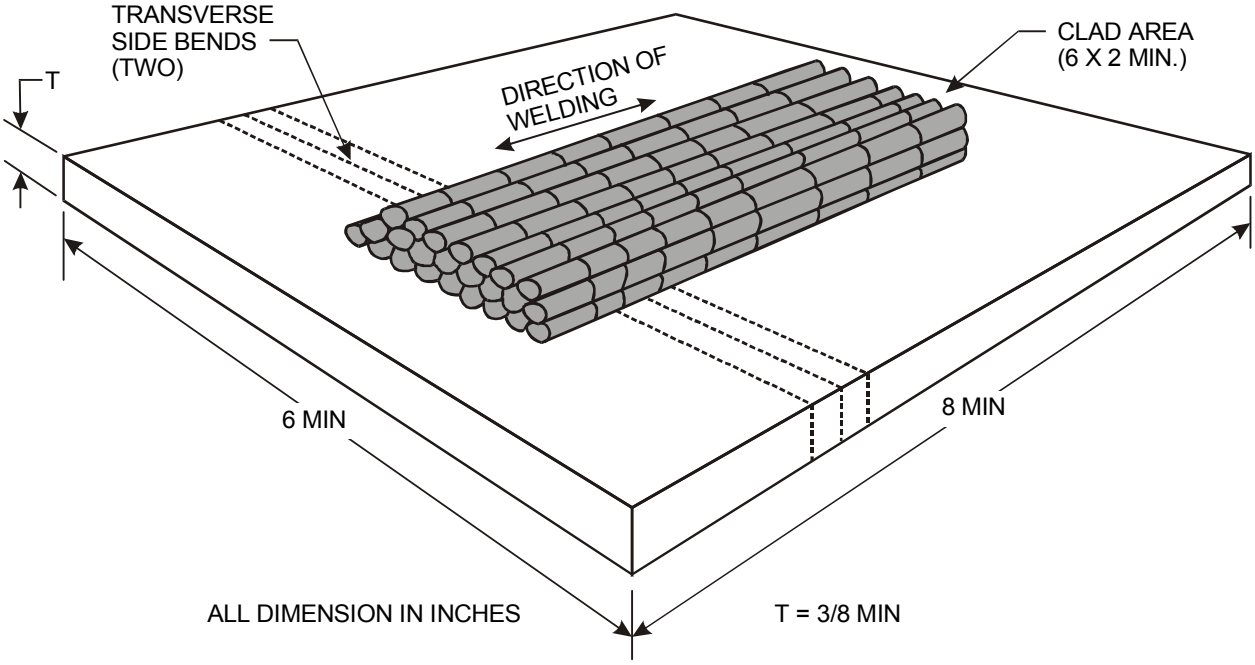

Note: Weld layers are illustrative only. Two transverse side bend specimens shall be removed from the test coupon for each position for which the welder is being qualified, except as otherwise required in 4.16.4

Figure 4.24 — Location of Cladding Specimens — Plate (see 4.16.3)

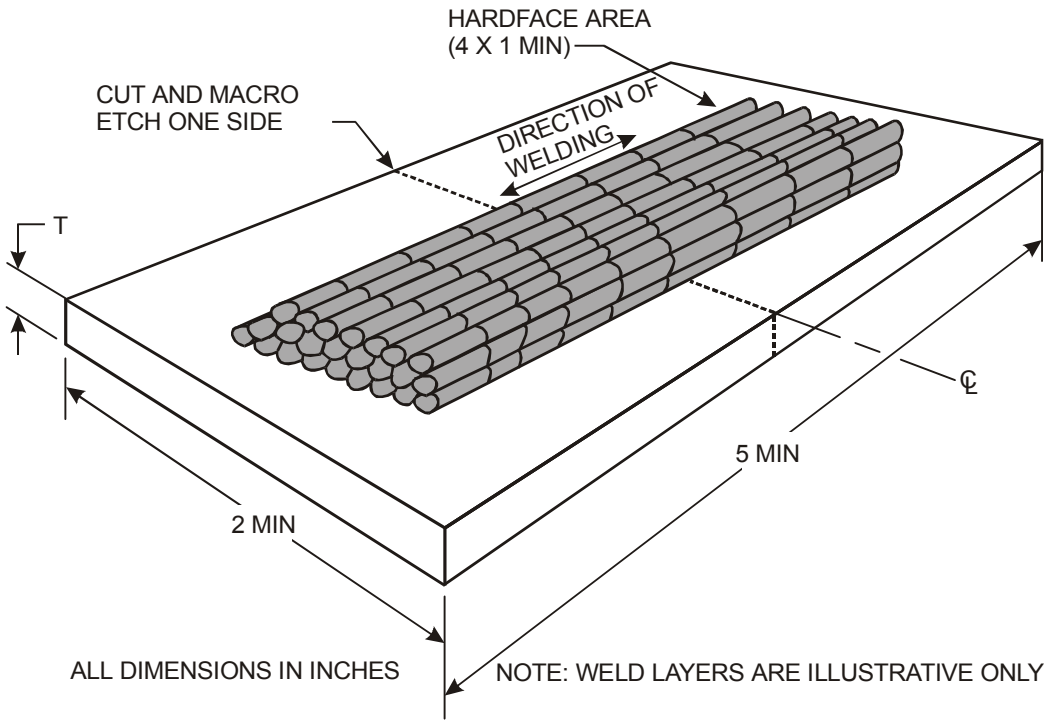

Note: Weld layers are illustrative only. One transverse macro specimen shall be removed from the test coupon for each position for which the welder is being qualified, except as otherwise permitted in Table 4.10

Figure 4.25 — Location of Test Specimen — Hardfacing Test Weldment — Plate (see 4.16.3)

Table 4.11
Pipe Diameter and Thickness Limitations for Performance Qualification on Groove Weld (see 4.18.1.1)

Test Weldment, in.		Qualifies for Pipe and Plate			
		Minimum Outside Diameter		Maximum Deposit Thickness	
Outside Diameter	Deposit Thickness (t)	Grooves	Fillets	Grooves	Fillets
Less than 1		Size Welded	All		
1 through 2-7/8		1	All		
Over 2-7/8		2-7/8	All		
	Less than 3/4			2t	All
	3/4 and over			Unlimited	All

t = thickness of the deposited weld metal.

Note: Two or more pipe coupons of different thicknesses may be used to determine the deposited weld metal thickness qualified, and that thickness may be applied to the smallest diameter for which the welder is qualified.

Table 4.12
Plate Groove Weld Qualification Thickness Limitations for Performance Qualification
(see 4.18.1.1)

	Qualifies for Plate	
Test Weldment Thickness, in. (T)	Plate Thickness, in. (t) Maximum	Fillet Weld Size, in.
<3/8	1/2t to 2t	Unlimited
3/8<1	1/8 to 2t	Unlimited
≥1	1/8 to Unlimited	Unlimited

Note: Qualification on plate will also qualify for groove welds in pipe 24 in. and over in diameter.

Table 4.13
Pipe Fillet Weld Qualification Limitations or Performance Qualification
(see 4.18.1.1)

	Qualifies for Fillets		
Test Weldment, in.	Outside Diameter, in	Fillet Weld Size	Base Metal Thickness, in.
Pipe Less than 1 outside diameter	Size welded and over	Unlimited	Unlimited
Pipe 1 to 2-7/8 outside diameter	1 and over	Unlimited	Unlimited
Pipe 2-7/8 outside diameter and over	2-7/8 and over	Unlimited	Unlimited
Plate or sheet	Over 24	Unlimited	Unlimited

Notes:
1. For pipe with an outside diameter of less than 2-7/8 in., qualification shall be on pipe test weldment with a fillet weld.
2. Qualification on any pipe groove weld also qualifies for fillet welds

Table 4.14
Sheet Metal Qualification Thickness Limitations for Performance Qualification
(see 4.18.1.1)

	Square Groove		Fillet, Flare Bevel, and Flare V-Groove	
Test Weldment Thickness (T)	Minimum	Maximum	Minimum	Maximum
Square Groove	0.5 T	2T	Unlimited	Unlimited
Fillets, flare bevels and flare V-grooves	Not qualified		T	Unlimited

T = thickness of the test weldment base metal

This page intentionally blank

5 Fabrication

5.1 Scope

All applicable provisions of this section shall be observed in the fabrication of welded assemblies and structures produced by any process acceptable under this code (see 3.2 and 4.14). This section also applies to the fabrication of armor components; however, Appendix B supercedes this section wherever a conflict exists.

5.2 Base Metal

5.2.1 Specified Base Metal.

The contract documents shall designate the specification and classification of base metal to be used. When welding is involved in the structure, approved base metals, listed in Table 3.1 or Appendix A or Appendix B, should be used wherever possible.

5.2.2 Base Metal for Weld Tabs, Backing, and Spacers

5.2.2.1 Weld Tabs

Weld tabs used in welding shall conform to the following requirements:

- (1) When used for welding with an approved steel listed in Table 3.1, the material may be any of the steels listed in Table 3.1 or Appendix A. When used for welding Appendix A materials, the weld tabs shall be of the same M-number.
- (2) When used in welding with a steel qualified in accordance with section 4 Part B the tabs may be:

  (a) the steel qualified,

  (b) any steel listed in Table 3.1 or Appendix A, or

  (c) corresponding M-numbers within provision of Table 4.6

5.2.2.2 Backing

Steel for backing shall conform to the requirements of 5.2.2.1.

5.2.2.3 Spacers

Spacers used shall be of the same material as the base metal.

5.3 Welding Consumables and Electrode Requirements

5.3.1 General

5.3.1.1 Certification for Electrodes or Electrode-Flux Combinations

The contractor shall be responsible for maintaining certification. When requested by the procuring activity, the contractor or fabricator shall furnish certification that the electrode or electrode-flux combination will meet the requirements of the classification.

5.3.1.2 Suitability of Classification

The classification and size of electrode, voltage, and amperage shall be suited to the thickness of the material, type of weld, welding positions, and other welding elements. Welding current shall be within the range specified on the WPS.

5.3.1.3 Shielding Gas

A gas or gas mixture used for shielding shall be of a welding grade and have a dew point of -40°F or lower. When requested by the procuring activity, the contractor or fabricator shall furnish the gas manufacturer's certification that the gas or gas mixture will meet the dew point requirements. When mixed at the welding site, suitable meters shall be used for proportioning the gases. Percentage of gases shall conform to the requirements of the WPS.

5.3.1.4 Storage

Welding consumables that have been removed from the original package shall be protected and stored so that the welding properties are not affected.

5.3.1.5 Electrode Condition

Electrodes shall be dry and in suitable condition for use.

5.3.2 SMAW Electrodes

Electrodes for SMAW shall conform to the requirements of the latest edition of ANSI/AWS A5.1, *Specification for Carbon Steel Electrodes for Shielded Metal Arc Welding Electrodes,* or to the requirements of ANSI/AWS A5.5, *Specification for Low-Alloy Steel Electrodes for Shielded Metal Arc Welding,* or AWS/ANSI A5.4, *Specification for Stainless Steel Electrodes for Shielded Metal Arc Welding.*

5.3.2.1 SMAW Electrode Storage Conditions

All low hydrogen and stainless steel electrodes having coverings conforming to ANSI/AWS A5.1, ANSI/AWS A5.4 and ANSI/AWS A5.5 shall be purchased in hermetically sealed containers or shall be baked by the user in accordance with 5.3.2.4 prior to use. Immediately after opening the hermetically sealed container, electrodes shall be stored in ovens held at a temperature of at least 250°F. Electrodes shall be rebaked no more than once. Electrodes that have been wet shall not be used.

5.3.2.2 Approved Atmospheric Time Periods

After hermetically sealed containers are opened or after electrodes are removed from baking or storage ovens, the electrode exposure to the atmosphere shall not exceed the values shown in column A, Table 5.1, for the specific electrode classification with optional supplemental designators, where applicable. The maximum permissible exposure of electrodes conforming to ANSI/AWS A5.4 shall be 4 hours.

Electrodes exposed to the atmosphere for periods less than those permitted by column A, Table 5.1 may be returned to a holding oven maintained at 250°F min; after a minimum hold period of four hours at 250°F min. the electrodes may be reissued.

5.3.2.3 Rebaking Electrodes

Electrodes exposed to the atmosphere for periods greater than those permitted in Table 5.1 shall be rebaked as follows:

- (1) All electrodes having low-hydrogen coverings conforming to ANSI/AWS A5.1 or ANSI/AWS A5.4 shall be baked for at least two hours between 500°F and 800°F, or
- (2) All electrodes having low-hydrogen coverings conforming to ANSI/AWS A5.5 shall be baked for at least one hour at temperatures between 700°F and 800°F.

All electrodes shall be placed in a suitable oven at a temperature not exceeding one half the final baking temperature for a minimum of one half hour prior to increasing the oven temperature to the final baking temperature. Final baking time shall start after the oven reaches final baking temperature.

Table 5.1
Permissible Atmospheric Exposure of Low-Hydrogen Electrodes (see 5.3.2.2 and 5.3.2.3)

Electrode	Column A (hours)
A5.1	
E70XX	4 max
E70XXR	9 max
E70XXHZR	9 max
E7018M	9 max
A5.5	
E70XX-X	4 max
E80XX-X	2 max
E90XX-X	1 max
E100XX-X	1/2 max
E110XX-X	1/2 max

Notes:

1. Column A: Electrodes exposed to atmosphere for longer periods than shown shall be redried before use.
2. Entire table: Electrodes shall be issued and held in quivers, or other small open containers. Heated containers are not mandatory.
3. The optional supplement designator, R, designates a low-hydrogen electrode which has been tested for covering moisture content after exposure to a moist environment for 9 hours and has met the maximum level in ANSI/AAWS A5.1-91, *Specification for Carbon Steel Electrodes for Shielded Metal Welding*.

5.3.2.4 Electrode Restrictions for ASTM A514 or A517 Steels

When used for welding ASTM A514 or A517 steels, electrodes of any classification lower than E100XX-X, except for E7018M and E70XXH4R, shall be baked at least one hour at temperatures between 700 and 800°F before being used, whether furnished in hermetically sealed containers or otherwise.

5.3.3 SAW Electrodes and Fluxes.

Submerged arc welding (SAW) may be performed with one or more single electrodes, one or more parallel electrodes, or combinations of single and parallel electrodes. The spacing between arcs shall be such that the slag cover over the weld metal produced by a leading arc does not cool sufficiently to prevent the proper weld deposit of a following electrode. SAW with multiple electrodes may be used for any groove or fillet weld pass.

5.3.3.1 Electrode-Flux Combination Requirements

The bare electrodes and flux used in combination for SAW of steels shall conform to the requirements in the latest edition of ANSI/AWS A5.17, *Specification for Carbon Steel Electrodes and*

Fluxes for Submerged Arc Welding, or to the requirements of the latest edition of ANSI/AWS A5.23, *Specification for Low Alloy Steel Electrodes and Fluxes for Submerged Arc Welding.*

5.3.3.2 Condition of Flux

Flux used for SAW shall be dry and free of contamination from dirt, mill scale, or other foreign material. All flux shall be purchased in packages that can be stored, under normal conditions, for at least six months without such storage affecting its welding characteristics or weld properties. Flux from damaged packages shall be discarded or shall be dried at a minimum temperature of 500°F for one hour before use. Flux that has been wet shall not be used.

5.3.3.3 Flux Reclamation

SAW flux that has not been melted during the welding operation may be reused after recovery by vacuuming, catch pans, sweeping, or other means. The welding fabricator shall have a system for collecting unmelted flux, adding new flux, and welding with the mixture of these two, such that the flux composition and particle size distribution at the weld puddle are relatively constant. Recrushed slag is not acceptable for use.

5.3.4 GMAW/FCAW Electrodes.

The electrodes and shielding for gas metal arc welding (GMAW) or flux cored arc welding (FCAW) for producing weld metal with minimum specified yield strengths of 60,000 psi or less, shall conform to the requirements of the latest edition of ANSI/AWS A5.18, *Specification for Carbon Steel Electrodes and Rods for Gas Shielded Arc Welding*, or ANSI/AWS A5.20, *Specification for Carbon Steel Electrodes for Flux Cored Arc Welding,* ANSI/AWS A5.9 *Specification for Bare Stainless Steel Welding Electrodes and Rods,* as applicable.

5.3.4.1 Low-Alloy Electrodes for GMAW

The electrodes and shielding for GMAW for producing weld metal with a minimum specified yield strength greater than 60,000 psi shall conform with the latest edition of ANSI/AWS A5.28, *Specification for Low Alloy Steel Filler Metals for Gas Shielded Arc Welding.*

5.3.4.2 Low-Alloy Electrodes for FCAW

The electrodes and shielding gas for FCAW for producing weld metal with a minimum specified yield strength greater than 60,000 psi shall conform to the latest edition of *ANSI/AWS A5.22, Specification for Flux Cored Corrosion Resisting and Chromium-Nickel Steel Electrodes* or ANSI/AWS A5.29, *Specification for Low Alloy Steel Electrodes for Flux Cored Arc Welding,* as appropriate.

5.3.5 GTAW

5.5.5.1 Tungsten Electrodes

Welding current shall be compatible with the diameter and type or classification of electrode. Tungsten electrodes shall be in accordance with ANSI/AWS A5.12, *Specification for Tungsten and Tungsten Alloy Electrodes for Arc Welding and Cutting.*

5.3.5.2 Filler Metal

The filler metal shall conform to all the requirements of the latest edition of ANSI/AWS A5.9 or ANSI/AWS A5.18 or ANSI/AWS A5.28 and ANSI/AWS A5.30, *Specification for Consumable Inserts.*

5.4 WPS Variables

The welding variables shall be in conformance with a written WPS. Each pass will have complete fusion with the adjacent base metal, and such that there will be no depressions or undue undercutting at the toe of the weld. Excessive concavity of initial passes shall be avoided to prevent cracking in the roots of joints under restraint.

5.5 Preheat and Interpass Temperatures

Base metal shall be preheated, if required, to a temperature not less than the minimum value listed on the WPS (See 3.4 for prequalified WPS limitations and 4.14.5 for qualified WPS essential variable limitations). For combinations of base metals, the minimum preheat shall be based on the highest minimum preheat.

This preheat and all subsequent minimum interpass temperatures shall be maintained during the welding operation for a distance at least equal to the thickness of the thickest welded part (but not less than 3 in.) in all directions from the point of welding.

Minimum interpass temperature requirements shall be considered equal to the preheat requirements, unless otherwise indicated on the WPS.

When preheat and interpass temperatures are to be verified, they shall be checked prior to initiating the arc.

5.6 Backing, Backing Gas, or Inserts

Complete joint penetration groove welds may be made with or without the use of backing gas, backing or consumable inserts, or may have the root of the initial weld gouged, chipped, or otherwise removed to sound metal before welding is started on the second side.

5.7 Backing

Roots of groove or fillet welds may be backed by copper, flux, glass tape, ceramic, iron powder, or similar materials to prevent melting through. They may also be sealed by means of root passes deposited with low-hydrogen electrodes if SMAW is used, or by other arc welding processes. Steel backing shall conform to the following requirements:

5.7.1 Fusion.

Groove welds made with the use of permanent steel backing shall have the weld metal thoroughly fused with the backing.

5.7.2 Full Length Backing.

Steel backing shall be made continuous for the full length of the weld. All joints in the steel backing shall be complete joint penetration welded butt joints meeting all the requirements of section 5 of this code.

5.7.3 Backing Thickness.

The minimum thickness of backing bars shall be of sufficient thickness to prevent melt-through.

5.8 Welding Environment

5.8.1 Maximum Wind Velocity

GMAW, GTAW, EGW, or FCAW-G shall not be done in a draft or wind unless the weld is protected by a shelter. Such shelters shall be of material and shape appropriate to reduce wind velocity in the vicinity of the weld.

5.8.2 Minimum Ambient Temperature

Welding shall not be done:

- (1) when the ambient temperature is lower than 0°F
- (2) when surfaces are wet or exposed to rain, snow, or
- (3) high wind velocities.

Note: Zero°F does not mean the ambient environmental temperature, but the temperature in the immediate vicinity of the weld. The ambient environmental temperature may be below 0°F, but a heated structure or shelter around the area being welded could maintain the temperature adjacent to the weldment at 0°F or higher.

5.9 Compliance with Design

The sizes and lengths of welds shall be no less than those specified by design requirements and detail drawings, except as permitted in Table 6.1.

5.10 Preparation of Base Metal

Surfaces on which weld metal is to be deposited shall be smooth, uniform, and free from fins, tears, cracks, and other discontinuities that would adversely affect the quality or strength of the weld. Surfaces to be welded, and surfaces adjacent to a weld, shall also be free from loose or thick scale, slag, rust, moisture, grease, and other foreign material that would prevent proper welding or produce objectionable fumes.

5.11 Tack Welds

5.11.1 General Requirements for Tack Welds.

Tack welds shall be subject to the same quality requirements as the final welds, with the following exceptions:

- (1) Preheat is not mandatory for single-pass tack welds which are remelted and incorporated into continuous submerged arc welds.
- (2) For submerged arc welding, discontinuities such as undercut, unfilled craters, and porosity need not be removed before the final weld.

5.11.2 Incorporated Tack Welds

Tack welds that are incorporated into the final weld shall be made with electrodes meeting the requirements of the final welds and shall be cleaned thoroughly. Multiple-pass tack welds shall have cascaded or ground ends to ensure tie-in.

5.11.2.1 Additional Requirements for Tack Welds Incorporated in SAW Welds

Tack welds in the form of fillet welds 3/8 in. or smaller, or in the roots of joints requiring specific penetration shall not produce objectionable changes in the appearance of the weld surface or result in decreased penetration. Tack welds not conforming to the preceding requirements shall be removed or reduced in size by any suitable means before welding. Tack welds in the root of a joint with steel backing less than 5/16 in. thick shall be removed or made continuous for the full length of the joint using SMAW with low-hydrogen electrodes, GMAW, or FCAW.

5.11.2.2 Unincorporated Tack Welds

Tack welds not incorporated into final welds shall be removed, except that, for non-critical welds, they need not be removed unless required by the drawing.

5.12 Control of Distortion and Shrinkage

5.12.1 Procedure and Sequence

In assembling and joining parts of a structure, the procedure and sequence shall be such as will minimize distortion and shrinkage.

5.12.2 Sequencing

Insofar as practicable, all welds shall be made in a sequence that will balance the applied heat of welding while the welding progresses.

5.12.3 Minimized Restraint.

In assemblies, joints expected to have significant shrinkage should usually be welded before joints expected to have lesser shrinkage. They should also be welded with as little restraint as possible.

5.12.4 Temperature Limitations.

In making welds under conditions of severe external shrinkage restraint, once the welding has started, the joint shall not be allowed to cool below the minimum specified preheat until the joint has been completed or sufficient weld has been deposited to ensure freedom from cracking.

5.13 Fillet Weld Assembly

If the fillet weld root opening exceeds 1/16 in., that leg of the fillet weld shall be increased by the amount of the opening.

5.14 Technique for Plug and Slot Welds

5.14.1 Plug Welds

The technique used to make plug welds when using SMAW, GMAW. (except short circuiting transfer), and FCAW processes shall be as follows:

5.14.1.1 Flat Position

For welds to be made in the flat position, each pass shall be deposited around the root of the joint and then deposited along a spiral path to the center of the hole fusing and depositing a layer of weld metal in the root and bottom of the joint. The arc is then carried to the periphery or the hole and the procedure repeated, fusing and depositing successive layers to fill the hole to the required depth. The slag covering the weld metal should be kept molten until the weld is finished. If the arc is broken or the slag is allowed to cool, the slag must be completely removed before restarting the weld.

5.14.1.2 Vertical Position.

For welds to be made in the vertical position, the arc is started at the root of the joint at the lower side of the hole and is carried upward, fusing the face of the inner plate and to the side of the hole. The arc is stopped at the top of the hole, the slag is cleaned off and the process is repeated on the opposite side of the hole. After cleaning slag from the weld, other layers should be similarly deposited to fill the hole to the required depth.

5.14.1.3 Overhead Position

For welds to be made in the overhead position the, procedure is the same as for the flat position, except that the slag should be allowed to cool and should be completely removed after depositing each successive bead until the hole is filled to the required depth.

5.14.2 Slot Welds

Slot Welds shall be made using techniques similar to those specified in 5.14.1.1 for plug welds, except that if the length of the slot exceeds three times the width, or if the slot extends to the edge of the part, the technique requirements of 5.14.1.3 shall apply.

5.15 Rework/Repairs

This section is provided for guidance in the case that repairs are required. Repairs shall be performed in accordance with approved repair procedures. When they are used, they shall take precedence over this section.

Definitions for rework and repair are as follows:

- *Rework* - The removal and replacing of an existing weld, addition or deletion of weld metal to bring a weld to drawing requirement, or the removal and replacement of a mislocated welded component.
- *Repair* - Through the welding process, the restoration of base metal to the correct configuration. This includes mislocated holes, slots, undersize and oversize material conditions.

5.15.1 The removal of weld metal or portions of the base metal shall be done either by mechanical, or thermal followed by mechanical. The removal shall be done so that the remaining weld

metal and base metal are not nicked or undercut. Unacceptable portions of the weld shall be removed without substantial removal of base metal. Metal added to compensate for any deficiency in the size of the weld shall be deposited by a qualified welder with filler of the same composition in accordance with an approved welding procedure. The surfaces shall be cleaned thoroughly before welding.

5.15.2 The contractor has the option of either reworking an unacceptable weld, or removing and replacing the entire weld. If the contractor elects to rework the weld, it shall be corrected as follows:

5.15.2.1 Overlap or Excessive Convexity

Excess weld metal shall be removed by machining, or grinding.

5.15.2.2 Excessive Concavity of Weld or Crater, Under-size Welds, Undercutting

Surfaces shall be prepared and additional weld metal deposited in accordance with the specified welding procedure.

5.15.2.3 Excessive Weld Porosity or Incomplete Fusion

Unacceptable portions shall be removed and the area rewelded in accordance with the specified welding procedure.

5.15.2.4 Cracks in Welds

The extent of the crack shall be ascertained by use of visual, or other NDT means. The crack shall be removed and the area rewelded in accordance with the specified welding procedure. If dye penetrant is used, all traces of penetrant and developer shall be removed before rewelding.

5.15.3 If the contractor elects to remove and replace the entire weld, the procedure approved for use on the original weld shall be used.

5.15.4 The reworked or replaced weld shall be tested or examined by the method originally used and the same technique and quality acceptance criteria shall be applied.

5.15.5 Members distorted by welding shall be straightened at ambient temperature by mechanical means and visually inspected subsequent to straightening.

5.15.6 Approval, by individuals authorized by the contractor, shall be obtained for such corrections as weld repairs to mill defects in the base metal and repair of cracks in accordance with approved repair procedures.

5.15.7 If, after an unacceptable weld has been made, work is performed which has rendered that weld inaccessible or has created new conditions which make correction of the unacceptable weld dangerous or ineffective, then the original conditions shall be restored by removing the added welds or members, or both, before the corrections are made. If this is not done, the weld must be submitted to Material Review Board (MRB) for disposition.

5.16 Peening

Peening may be used on intermediate weld layers for control of shrinkage stresses in thick welds to prevent cracking or distortion, or both. No peening shall be done on the root or surface layer.

5.16.1 Tools

The use of manual slag hammers, chisels, and lightweight vibrating tools for the removal of slag and spatter is permitted and is not considered peening.

5.17 Caulking

Caulking of welds shall not be permitted.

5.18 Arc Strikes

Arc strikes outside the area of permanent welds should be avoided on any base metal. Cracks shall, and blemishes should be ground to a smooth contour and checked to ensure soundness. Suspect indications should be further checked by magnetic particle or penetrant inspection.

5.19 Weld Cleaning

5.19.1 In-Process Cleaning

Before welding over previously deposited metal, all slag shall be removed and the weld and adjacent base metal shall be brushed clean. This requirement shall apply not only to successive layers but also to successive beads and to the crater area when welding is resumed after any interruption. It shall not, however, restrict the welding of plug and slot welds.

5.19.2 Cleaning of Completed Welds.

Slag shall be removed from all completed welds, and the weld and adjacent base metal shall be cleaned by brushing or other suitable means. Tightly adherent spatter remaining after the cleaning operation is acceptable, unless its removal is required for the purpose of nondestructive testing or personnel safety. Welded joints shall not be painted

until after welding has been completed and the weld accepted.

6 Inspection

Part A General Requirements

This section specifies or references the requirements for the Inspector's qualifications and responsibilities, acceptance criteria for discontinuities, and procedures for nondestructive testing (NDT).

6.1 General

6.1.1 For the purpose of this code, fabrication inspection and verification inspection are separate functions. Fabrication inspection shall be performed as necessary prior to assembly, during assembly, during welding, and after welding to ensure that materials and workmanship meet the requirements of the contract documents. Verification inspection is performed after manufacturing in a timely manner to avoid work delays.

6.1.2 Fabrication and verification inspection is the responsibility of the contractor and/or manufacturer.

When the term Inspector(s) is used without further qualification, it applies equally to fabrication and verification within the limits of responsibility designated in 6.1.1.

6.1.3 Inspector Qualification

6.1.3.1 Inspectors responsible for acceptance or rejection of material and workmanship shall be qualified. The basis of Inspector qualification shall be documented.

The following are acceptable qualification bases:

- (1) Current or previous certification as an AWS Certified Welding Inspector (CWI) in accordance with the provisions of AWS QCI, *Standard and Guide for Qualification and Certification of Welding Inspectors,* or
- (2) Current or previous qualification by the Canadian Welding Bureau (CWB) to the requirements of the Canadian Standard Association (CSA) Standard W178.2, *Certification of Welding Inspectors,* or
- (3) An engineer, technician, or operator who by training and experience in metals fabrication, inspection, and testing, is competent to perform inspection of the work, as described in this code.

6.1.3.2 The qualification of an Inspector shall remain in effect indefinitely, provided the Inspector remains active in inspection of welded steel fabrication, unless there is specific reason to question the Inspector's ability.

6.1.3.4 Inspectors shall have passed an eye examination with or without corrective lenses to prove: (1) near vision acuity of Snellen English, or equivalent, at 12 in., and (2) far vision acuity of 20/40, or better. An eye examination of all inspection personnel is required every three years or less, if necessary, to demonstrate adequacy.

6.1.3.5 Weld Engineering and/or Quality Engineering shall have authority to verify the qualification of Inspectors.

6.1.4 The Inspector shall ascertain that all fabrication and welding is performed in accordance with the requirements of the contract documents and this code.

6.2 Inspection of Welding Procedure Specification and Equipment

The contractor shall make certain that all welding is in accordance with a welding procedure specification that has been qualified in accordance with Section 3, Section 4, or Appendix B of this code.

6.3 Inspection of Welder, Welding Operator, and Tack Welder Qualifications

6.3.1 The contractor shall permit welding to be performed only by welders, welding operators, and tack welders who are qualified in accordance with the requirements of Section 4.

6.3.2 When the quality of a welder's, welding operator's, or tack welder's work appears to be below the requirements of this code, the contractor shall determine the cause and may require that the welder, welding operator, or tack welder demonstrate an ability to produce sound welds by means of a simple test, such as the fillet weld break test or by requiring complete requalification in accordance with Section 4.

6.3.3 The contractor shall require requalification of any welder, welding operator, or tack welder who has not used each process to be

used in the construction under consideration for a period exceeding six months.

6.4 Inspection of Work and Records

6.4.1 As part of the visual inspection, the Inspector shall make certain that the size, length, and location of all welds conform to the requirements of this code, and to the detail drawings, and that no unspecified welds have been added without approval (with the exception of construction tack welds).

6.4.2 The Inspector shall examine the work to make certain that it meets the requirements of this section and Appendix B as applicable. The size and contour of welds shall be measured with acceptable gages. Visual inspection for cracks in welds and base metal and other discontinuities can be aided by a strong light, magnifiers, or such other devices as may be found helpful.

6.4.3 The contractor or manufacturer shall keep a record of qualifications of all welders, welding operators, and tack welders, all procedure qualifications or other tests that are made, and such other information as may be pertinent.

6.5 Obligations of the Contractor

6.5.1 In addition to the requirements of 6.1.1, the contractor shall be responsible for visual inspection and necessary correction of all deficiencies in materials and workmanship in accordance with the requirements of this section, and Appendix B as applicable.

6.5.2 The contractor shall comply with all requests of the Inspector to correct deficiencies in materials and workmanship as required in the contract documents.

6.5.3 If faulty welding or its removal for rewelding damages the base metal so that in the judgment of the Material Review Board (MRB) its retention is not in accordance with the intent of the contract documents, the contractor shall remove and replace the damaged base metal in a manner approved by the MRB.

6.5.4 When nondestructive testing other than visual inspection is specified in the information furnished to bidders, it shall be the contractor's responsibility to ensure that all specified welds meet the quality requirements of this section, and Appendix B as applicable.

6.6 Nondestructive Testing

Acceptance criteria shall be as specified in this section. Welds subject to nondestructive testing shall have been found acceptable by visual inspection in accordance with Table 6.1.

Except as noted below, welds subject to nondestructive examination may be tested immediately after the completed welds have cooled to ambient temperature. Acceptance criteria for ASTM A514 and A517 steels shall be based on nondestructive testing performed not less than 48 hours after completion of the welds.

6.6.1 Non-Critical Welds

6.6.1.1 For all existing engineering drawings, the current nomenclature, “MIL-STD-1261, Class 1” shall be referred to as “non-critical welds”.

6.6.1.2 This class of welds applies to low-stressed joints in readily weldable steel alloys. It is applicable to all weld joints whose failure would not result in injury to personnel, or in unfulfillment of an assigned mission. This class of welds is not applicable to ballistic joints.

Readily weldable steel alloys are those carbon steels having a carbon equivalent value not exceeding 0.40 weight percent (w/o). For low alloys steels, a carbon equivalent of .45 w/o is acceptable so long as the carbon content does not exceed .26 w/o and the phosphorus and sulfur do not exceed .06 w/o, each, and the thickness does not exceed 0.75 inch.

Carbon equivalent (CE) is defined as:

$$CE = C + \frac{Mn}{6} + \frac{Mo}{4} + \frac{Cr}{5} + \frac{Ni + Cu}{15} + \frac{P}{3}$$

Examples of weldments in this category include attachments, brackets, fenders, heaters, air ducts, safety shields, ammunition boxes, boiler casings, air vents, and most types of sheet metal assemblies.

6.6.1.3 In all drawings subsequent to this code, the weld instruction in the appropriate drawing or technical data package should be:

“Weld in accordance with Drawing 12479550, Ground Combat Vehicle Welding Code – Steel, ”Non-Critical Welds”.

6.6.1.4 The quality requirements for welds of this category shall be as found in Table 6.1.

6.6.2 Critical Welds

6.6.2.1 For all existing engineering drawings, the current nomenclature, “MIL-STD-1261, Class 2”,

or “MIL-STD-1261, Class 3” shall be referred to as “critical welds”.

6.6.2.2 This class of welds applies to highly stressed joints in readily weldable steel alloys, and to joints in steel alloys requiring special welding procedure controls. Readily weldable alloys are defined in 6.7.1.2.

This class of weld is applicable to all weld joints where failure of the joint would likely result in personnel injury, loss of life, or a mission-critical failure. This class of welds is not applicable to ballistic joints.

Examples of weldments in this category include highly stressed carriage and vehicle components and assemblies, leakproof containers, and pressure tight vessels.

6.6.2.3 In all drawings subsequent to this code, the weld instruction in the appropriate drawing or technical data package shall be:

“Weld in accordance with Drawing 12479550, Ground Combat Vehicle Welding Code – Steel, ”Critical Welds”.

6.6.2.4 The quality requirements for welds of this category shall be as found in Table 6.1 and Appendix B.

6.6.3 Ballistic Welds

Ballistic weld requirements are described in Appendix B.

6.6.4 Procedures

6.6.4.1 Radiographic Testing

When radiographic testing is used, the procedure and technique shall be in conformance with ASTM E142.

6.6.4.2 Radiation Imaging Systems.

When examination is performed using radiation imaging systems, the procedures and techniques shall be in conformance with ANSI/AWS D1.1.

6.6.4.3 Ultrasonic Testing.

When ultrasonic testing is used, the procedure and technique shall be as specified in Appendix B, B3.4.

6.6.4.4 Magnetic-Particle Testing.

When magnetic-particle testing is used, the procedure and technique shall be in accordance with ASTM E1444.

6.6.4.5 Dye Penetrant Testing.

For detecting discontinuities that are open to the surface, dye penetrant testing may be used. The standard methods set forth in ASTM E165 shall be used for dye penetrant inspection, and the standards of acceptance shall be in accordance with Table 6.1.

6.6.5 Personnel Qualification

6.6.5.1 Personnel performing nondestructive testing other than visual shall be qualified in accordance with the current edition of the American Society for Nondestructive Testing Recommended Practice No. SNT-TC-1A. Only individuals qualified for NDT Level I and working under the NDT Level II or individuals qualified for NDT Level II or Level III may perform nondestructive testing.

6.6.5.2 Certification of Level I and Level II individuals shall be performed by a Level III individual who has been certified by (1) The American Society for Nondestructive Testing, or (2) has the education, training, experience, and has successfully passed the written examination prescribed in SNT-TC-1A

6.6.5.3 Personnel performing nondestructive tests under the provisions of 6.6.5 need not be qualified nor certified under the provisions of AWS QCI.

Table 6.1
Visual Acceptance Criteria Matrix[1,2,3] for all material thicknesses
(see 6.6)

Discontinuity Category and Acceptance Criteria	Non-Critical Welds	Critical and Ballistic Welds, and Structural Tubular Connections
(1) Crack Prohibition The weld shall have no cracks.	X	X
(2) Weld/Base-Metal Fusion Thorough fusion shall exist between adjacent layers of weld metal and between weld metal and base metal.	X	X
(3) Crater Cross Section All craters shall be filled to the full cross section of the weld, except for the ends of intermittent fillet welds outside of their effective length.	X	X
(4) Weld Profiles **Weld profiles are as follows:** • Fillet weld concavity is acceptable as long as the weld throat meets the size requirement. • Fillet weld convexity may not exceed the following limits: For welds 1/4" or less, convexity shall not exceed 1/16". For welds greater than 1/4" and less than 3/4", convexity shall not exceed 1/8". For welds 3/4" and greater, convexity shall not exceed 3/16". • Groove and butt welds must meet minimum size requirement and reinforcement shall not exceed 5/32". • Groove and butt welds that require flush finish shall not reduce the thinner member by more than 1/32" for material 1/8" or greater in thickness. For materials less than 1/8" thick, the thinner member shall not be reduced by more than 10% of the thickness of the thinner member.	X	X
(5) Underrun (Undersize) Fillet welds shall be permitted to be undersize by 15% or 1/16", whichever is less, provided the undersize condition does not exceed 10% of the weld length.	X	X
(6) Undercut • For materials less than 1/8", undercut shall not exceed 10% of the material thickness. • For materials greater than or equal to 1/8" and less than 1" thick, undercut shall not exceed 1/32", except that a maximum 1/16" is permitted for no greater than 2" in any 12" of weld length. • For materials equal to or greater than 1 undercut shall not exceed 1/16" for any length of weld.	X	
(7) Undercut Undercut shall not exceed 1/32" for materials greater than 1/8". For materials 1/8" or less undercut shall not exceed 10% of the material thickness.		X
(8) Porosity-individual Size and Sum Total For all groove and fillet welds the maximum diameter of any pore shall not exceed 3/32". The sum of visible porosity equal to or greater than 1/32" shall not exceed 3/8" in any linear inch of weld and shall not exceed 3/4' in any 12" of weld length.	X	X
(9) Porosity Frequency For fillet and groove welds, clustered porosity shall not exceed one occurrence in any 4" of weld length.	X	X

1. An "X" indicates applicability; a shaded area indicates non-applicability.
2. Visual inspection of welds in all steels may begin immediately after the completed welds have cooled to ambient temperature. Acceptance criteria for ASTM A514, A517, and A709 (Grades 100 and 100W steels shall be based on visual inspection performed no less than 48 hours after completion of the weld.

3. Requirements specified in the individual vehicle supplements take precedence in the event of a conflict.

Part B

Radiographic Inspection

6.7 General

6.7.1 The procedures and standards set forth herein govern radiographic testing of welds when such inspection is required by the contract documents. The requirements listed herein are specifically for testing welds in plates, shapes, and bars by X-ray or gamma-ray sources. The methodology shall conform to ASTM E94, *Standard Recommended Practice for Radiographic Testing,* and ASTM E142, *Standard Method for Controlling Quality of Radiographic Testing,* except as provided herein.

6.7.2 Variations in testing procedures, equipment, and acceptance standards may be used upon agreement between the contractor and the procuring activity. Such variations include, but are not limited to, the following unusual application of film; unusual penetrameter applications (including film side penetrameters and wire penetrameters); and radiographic testing of thicknesses greater than 6 in.

6.8 Extent of Testing

The extent of radiographic testing shall be as specified in the technical data package.

6.9 Radiographic Procedures

6.9.1 Radiographs shall be made using a single source of either X-ray or gamma radiation. The radiographic sensitivity shall be judged on the basis of the penetrameter images. The radiographic technique and equipment shall provide sufficient sensitivity to clearly delineate the required penetrameters and the essential holes as described in 6.9.7, Table 6.2 and Figure 6.3. Identifying letters and numbers shall show clearly in the radiograph.

6.9.2 Radiography shall be performed in accordance with all applicable safety requirements.

6.9.3 When the technical data package requires the removal of weld reinforcement, the welds shall be prepared for radiography by grinding. Other weld surfaces need not be ground or otherwise smoothed for purposes of radiographic testing unless surface irregularities between the weld and base metal obscure objectionable weld discontinuities.

6.9.3.1 Extension bars and run off plates shall be removed prior to radiographic inspection unless otherwise approved by the Weld or Quality Engineer.

6.9.3.2 When required by the technical data package, backing shall be removed and the surface shall be finished flush by mechanical means prior to radiography.

6.9.3.3 When weld reinforcement or backing, or both are not removed, steel shims which extend at least 1/8 in. beyond three sides of the required penetrameter shall be placed under the penetrameter so that the total thickness of steel between the penetrameter and the film is approximately equal to the average thickness of the weld measured through its reinforcement and backing.

6.9.4 Lead foil screens shall be used as needed. Fluorescent screens shall be permitted when approved by the procuring agency.

6.9.5 Radiographs shall be made with a single source of radiation centered as near as practicable with respect to the length and width of that portion of the weld being examined, and shall conform to the locations specified on the appropriate radiographic inspection drawing of the technical data package.

6.9.5.1 Gamma ray sources, regardless of size, shall be capable of meeting the geometric unsharpness requirement of Article 2, Section V of *ASME Boiler and Pressure Vessel Code.*

6.9.5.2 The source-to-subject distance shall not be less than the total length of film being exposed in a single plane. This provision does not apply to panoramic exposures made under the provisions of 6.9.8.1.

6.9.5.3 The source-to-subject distance shall not be less than seven times the thickness of the weld plus reinforcement and backing.

6.9.6 X-ray units may be used as a source for all radiographic inspection, provided they have adequate penetrating ability. Maximum permissible voltage depends on

material thickness, as shown by ASME Section V, Article 2.

Table 6.2
Penetrameter Requirements (see 6.9.1)

Nominal Material Thickness Range (in.)	Penetrameter Identification	Penetrameter Thickness, in.	Essential Hole
Up to 0.25 incl.	10	0.010	4T
Over 0.25 to 0.375	12	0.012	4T
Over 0.375 to 0.50	15	0.015	4T
Over 0.50 to 0.625	15	0.015	4T
Over 0.625 to 0.75	17	0.017	4T
Over 0.75 to 0.875	20	0.020	4T
Over 0.875 to 1.00	20	0.020	4T
Over 1.00 to 1.25	25	0.025	4T
Over 1.25 to 1.50	30	0.030	2T
Over 1.5 to 2.00	35	0.035	2T
Over 2.00 to 2.50	40	0.040	2T
Over 2.50 to 3.00	45	0.045	2T
Over 3.00 to 4.00	50	0.050	2T
Over 4.00 to 6.00	60	0.060	2T

6.9.7 For joints of approximately uniform thickness, a single penetrameter shall show clearly on each radiograph, as shown in Figure 6.1.

When a transition in thickness occurs at a welded joint, each film shall clearly show one penetrameter on the thinner plate and one penetrameter on the thicker plate, as shown in Figure 6.2. Penetrameters shall be placed on the source side, parallel to the weld joint when possible, with the essential holes at the outer end as detailed in Figures 6.1 and 6.2.

6.9.7.1 The thickness of the penetrameter and the essential hole diameter shall be as specified in Table 6.2, except that a smaller essential hole or a thinner penetrameter, or both, may be selected by the contractor, provided all other provisions for radiography are met.

The thickness of the weldment shall be measured as T1 or T2, or both, at the locations shown in Figures 6.1 or 6.2, and may be increased to provide for the thickness of allowable weld reinforcement, provided shims are used as specified in 6.9.3.3. Steel backing shall not be considered part of the weld or reinforcement in the penetrameter selection. The penetrameter representative of the maximum weld thickness may be placed on either the sloping surface within 1 in. of the fusion line, or on a shim of suitable thickness on thinner side.

6.9.7.2 Penetrameters for steel shall be manufactured from a radiographically similar steel alloy. Plaque type penetrameters shall conform to dimensions shown in Figure 6.3. For more detailed information, ASTM E142 should be consulted.

Each plaque type penetrameter shall be manufactured with three holes in accordance with Figure 6.3.

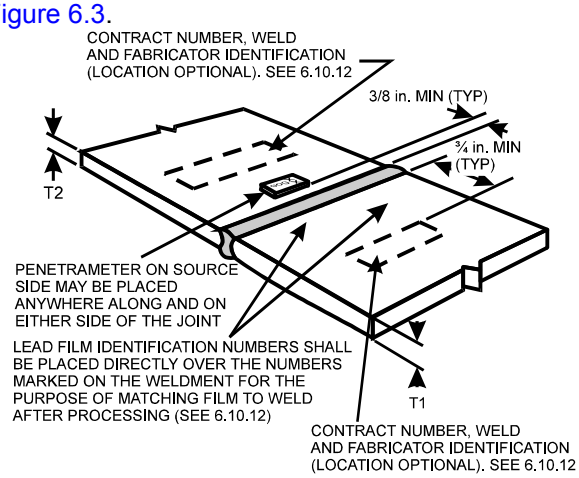

Figure 6.1 — Radiographic Identification and Penetrameter Locations on Approximately Equal Thickness Joints (see 6.9.7)

6.9.7.3 Wire type penetrameter shall conform to the requirements of ASTM E747.

6.9.8 Welded joints shall be radiographed and the film indexed by methods that will provide complete and continuous inspection of the joint within the limits specified to be examined. Joint limits shall show clearly in the radiographs. Short film, short screens (except when required by the radiographic procedure), excessive undercut by scattered radiation, or any other process that

obscures portions of the total weld length shall render the radiograph unacceptable.

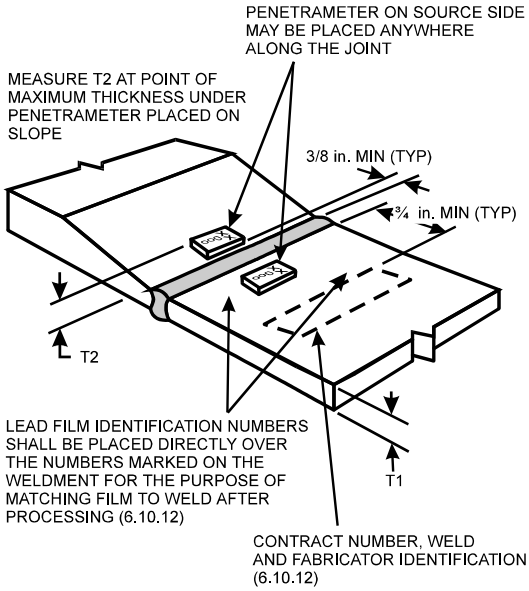

Figure 6.2 — Radiographic Identification and Locations on Transitions Joints (see 6.9.7)

6.9.8.1 Except for spot radiography, films shall have sufficient length and shall be placed to produce at least 1/2 in. of film, exposed to direct radiation from the source, beyond each free edge where the weld is terminated.

6.9.8.2 To check for backscattered radiation, a lead symbol "B", 1/2 in. high, 1/16 in. thick shall be attached to the back of each film cassette. If the "B" image appears on the radiograph, the radiograph shall be unacceptable.

6.9.9 Film widths shall be sufficient to depict all portions of the welded joint, including the heat-affected zones, and shall provide sufficient additional space for the required penetrameters and film identification. The penetrameter shall be placed at least 1/8 in., but not more than 1/4 in. from the weld edge, whenever possible.

6.9.10 Quality of Radiographs.

All radiographs shall be free from mechanical, chemical, or other blemishes to the extent that they might mask or be confused with the image of any discontinuity in the area of interest in the radiograph. Such blemishes include, but are not limited to the following:

- (1) fogging.
- (2) processing defects such as streaks, water marks, or chemical stains.
- (3) scratches, finger marks, crimps, dirt, static marks, smudges, or tears.
- (4) loss of detail due to poor screen-to-film contact.
- (5) false indications due to defective screens or internal faults.

6.9.11 Density Limitations.

The transmitted film density through the radiographic image of the body of the required penetrameter(s) and the area of interest shall be 1.8 minimum (preferably in the range from 2.5 to 3.5) for single film viewing for radiographs made with an X-ray source and 2.0 minimum for radiographs made with a gamma-ray source. For composite viewing of double film exposures, the minimum density shall be 2.0. The maximum density shall be 4.0 for either single or composite viewing.

The film shall be processed to develop a film blackening measured by the H&D radiographic density expressed as:

- D = H&D (radiographic)density = $\log_{10} (I_0/I)$
- where:

  I_0 = light intensity on the film, and
  I = light transmitted through the film

6.9.12 Radiograph identification and location identification marks shall be placed on the weldment at each radiograph location, all of which shall show in the radiograph. The radiographic images shall be produced by placing lead numbers or letters, or any combination thereof, over each of the identical identification and location marks made on the weldment. The images provide the means for matching the developed radiograph with the weld.

Additional identification information may be preprinted no less than 3/4 in. from the edge of the weld or produced on the radiograph by placing lead figures on the weldment.

Information required to show on the radiograph shall include the contract identification, initial of the radiographic inspection company, initials of the fabricator, the fabricator shop order number, the radiographic identification mark, the date, and the weld repair number, if applicable.

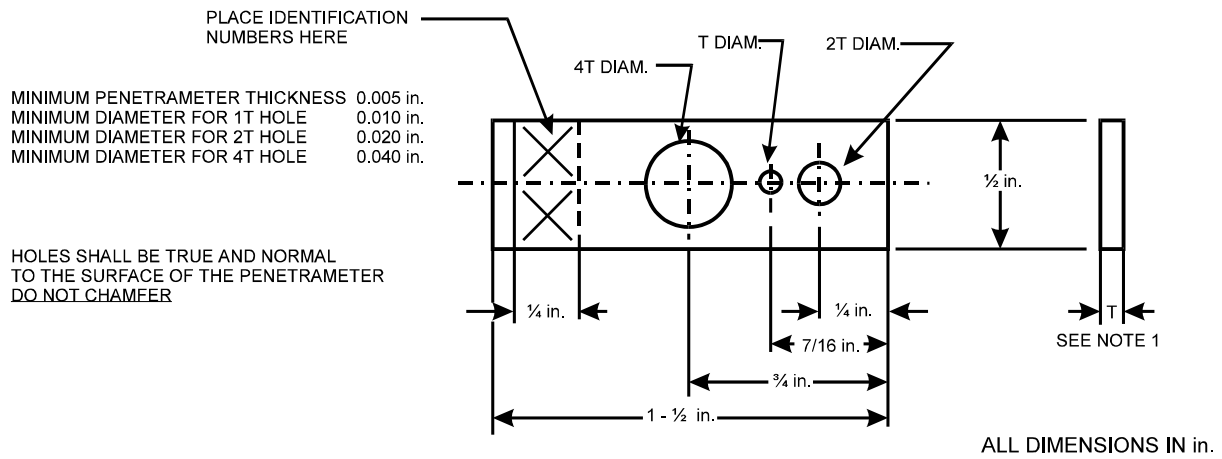

DESIGN FOR PENETRAMETER THICKNESS FROM 0.005 in. AND INCLUDING 0.050 in.:
FROM 0.005 in. THROUGH 0.023 in. SEE ASTM E142, TABLE 1
OVER 0.012 in. THROUGH 0.020 in., MADE IN 0.0025 in. INCREMENTS
OVER 0.020 in. THROUGH 0.050 in., MADE IN 0.005 in INCREMENTS
PENETRAMETER THICKNESSES BETWEEN THE INCREMENTS INDICATED ARE PERMITTED PROVIDED THEY DO NOT EXCEED THE MAXIMUM THICKNESS REQUIRED.

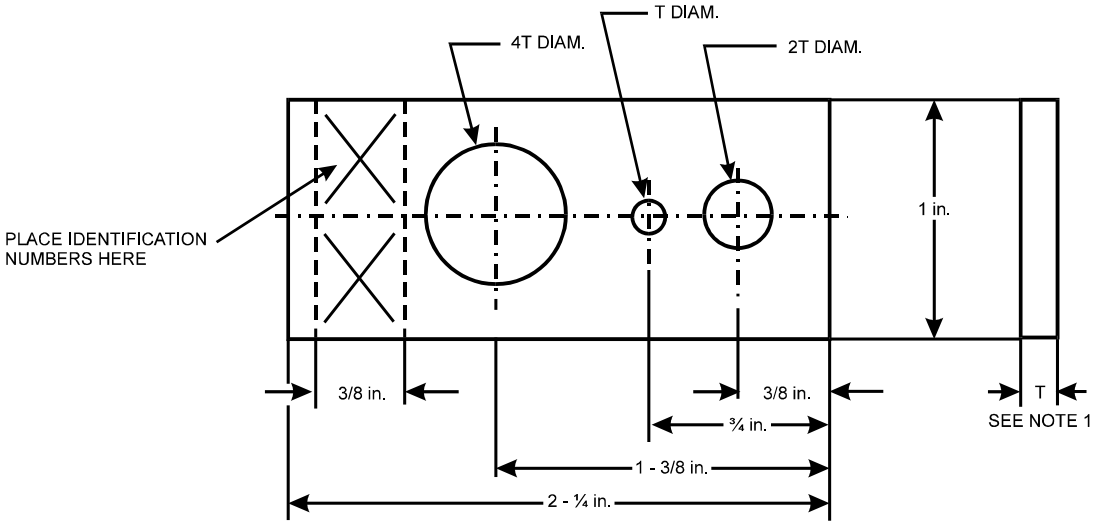

DESIGN FOR PENETRAMETER THICKNESS FROM 0.060 in. to 0.160 in. INCLUSIVE
MADE IN 0.010 in. INCREMENTS

Notes:
1. Tolerances on penetrameter thickness and hole diameter shall be ± 10% or one half of the thickness increment between parameter sizes, whichever is smaller.
2. For the Essential Hole — see 6.2 1.

Figure 6.3 — Penetrameter Design (see 6.9.7)

6.10 Acceptability of Welds

Welds shown by radiographic testing to have discontinuities prohibited by the acceptance criteria (Part C), shall be corrected in accordance with 5.15. More dense inclusions shall be treated as porosity.

6.11 Examination, Report, and Disposition of Radiographs

6.11.1 The contractor or manufacturer shall maintain a record of the welds or portions of welds subjected to radiographic inspection and include descriptions, pictures, or sketches of the discontinuity indications developed.

6.11.2 The contractor shall provide a variable intensity illuminator (viewer) with spot-review or masked spot-review capability. The viewer shall incorporate a means for adjusting the size of the spot under examination. The viewer shall have sufficient capacity to properly illuminate radiographs with an H&D density of 4.0. Film review shall be done in an area of subdued light.

6.11.3 Before a weld subject to radiographic testing is accepted by the contractor, all of its radiographs, including any that show unacceptable quality prior to repair, and a report interpreting them, shall be submitted to the procuring activity upon request.

6.11.4 The contractor's or manufacturer's obligation to retain radiographs shall cease 1 year after completion of the contract unless otherwise specified.

Part C
Acceptance Criteria

6.12 General

Acceptance criteria for visual and nondestructive inspection of non-critical, critical and ballistic connections are described or referenced in this Part.

6.12.1 Visual

All welds shall be visually inspected and found acceptable if they do not contain discontinuities that exceed the allowances in Table 6.1.

6.12.2 Liquid Penetrant and Magnetic-Particle

Welds that are subject to penetrant or magnetic-particle testing shall be evaluated to the applicable requirements for visual inspection.

6.12.3. Radiographic

Welds that are subject to radiographic testing shall be evaluated to the applicable requirements on the basis of whether it is a partial penetration or full penetration weld. Partial penetration welds will be evaluated to Mil Std 1894 std. 3. Full penetration welds will be evaluated to Appendix B, Table B3.3

6.12.4 Ultrasonic

Welds that are subject to ultrasonic testing shall be evaluated to the criteria specified in Appendix B, table 3.4.

This page intentionally blank

7 Stud Welding

7.1 Scope

Section 7 contains general requirements for stud welding any materials listed in Table 3.1, Appendix A, Mil-A-12560, and Mil-A-11356.

- (1) For workmanship, preproduction testing, operator qualification, and application qualification testing when required, all to be performed by the contractor.
- (2) For fabrication inspection and verification inspection of stud welding during production.
- (3) For mechanical properties of steel studs, and requirements for qualification of stud bases, all tests and documentation to be furnished by the stud manufacturer.

In all drawings subsequent to this code, the weld shall be noted on the technical data package as follows: “Weld in accordance with Drawing 12479550, Ground Combat Vehicle Welding Code — Steel, Stud Welds.”

7.2 Workmanship

7.2.1 Cleanliness

At the time of welding, the studs shall be free from rust, rust pits, scale, oil, moisture, or other deleterious matter that would adversely affect the welding operation.

7.2.2 Coating Restrictions

The stud base shall not be painted, galvanized, or cadmium-plated prior to welding.

7.2.3 Base-Metal Preparation

The areas to which the studs are to be welded shall be free of scale, rust, moisture, paint, or other injurious material to the extent necessary to obtain satisfactory welds and prevent objectionable fumes. These areas may be cleaned by wire brushing, scaling, prick-punching, or grinding. Extreme care should be exercised when welding through metal decking.

7.2.4 Moisture.

The arc shields or ferrules shall be kept dry. Any arc shields which show signs of surface moisture from dew or rain shall be oven dried at 250°F (120°C) for two hours before use.

7.2.5 Ferrule Condition

All ferrules shall be examined by the operator and deemed suitable for its intended use.

7.2.6 Arc Shield Removal

After welding, arc shields shall be broken free from studs.

7.2.7 Acceptance Criteria

The studs, after welding, shall be free of any discontinuities or substances that would interfere with their intended function and have a full 360° flash. However, nonfusion on the legs of the flash and small shrink fissures are acceptable.

7.3 Technique

7.3.1 Automatic Machine Welding

Studs shall be welded with automatically timed stud welding equipment connected to a suitable source of direct current electrode negative power. Welding voltage, current, time, and gun settings for lift and plunge should be set at optimum settings, based on past practice, recommendations of stud and equipment manufacturer, or both. ANSI/AWS C5.4, *Recommended Practices for Stud Welding*, should also be used for technique guidance.

7.3.2 GTAW, GMAW, SMAW Fillet Weld Option.

At the option of the contractor, studs may be welded using qualified welding procedures.

7.3.2.1 Surfaces

Surfaces to be welded and surfaces adjacent to a weld shall be free from loose or thick scale, slag, rust, moisture, grease, and other foreign material that would prevent proper welding or produce objectionable fumes.

7.3.2.2 Stud End

For fillet welds, the end of the stud shall also be clean.

7.3.2.3 Stud Fit (Fillet Welds)

For fillet welds, the stud base shall be prepared so that the base of the stud fits against the base metal.

7.3.2.4 Fillet Weld Minimum Size

When the fillet weld option is used, either the minimum size shall be specified on the drawing or studs welded by an optional method shall meet the same design intent.

7.3.2.5 Studs welded using processes other than stud welding shall be visually inspected to Visual Acceptance Criteria Matrix, Non-Critical (Table 6.1).

7.4 Stud Application Qualification Requirements

7.4.1 Responsibilities for Tests

The contractor or stud applicator shall be responsible for the performance of these tests. Tests may be performed by the contractor or stud applicator, the stud manufacturer, or by another testing agency satisfactory to all parties involved.

7.4.2 Preparation of Specimens

7.4.2.1 Test Specimens

To qualify applications involving materials listed in Table 3.1, Groups I and II, specimens may be prepared using ASTM A36 steel base materials or base materials listed in Table 3.1, Groups I and II.

To qualify applications involving materials other than those listed in Table 3.1, Groups I and II, the test specimen base material shall be of the chemical, physical, and grade specifications to be used in production.

7.4.3 Number of Specimens

Ten specimens shall be welded consecutively using recommended procedures and settings for each diameter, position, and surface geometry.

7.4.4 Test Required

The ten specimens shall be tested using one or more of the following methods: bending, torquing, or tensioning.

7.4.5 Test Methods

7.4.5.1 Bend Test

Studs shall be tested by alternately bending 30° in opposite directions in a typical test fixture as shown in Appendix D until failure occurs. Alternatively, studs may be bent 90° from their original axis. In either case, a stud application shall be considered qualified if fracture does not occur in the weld.

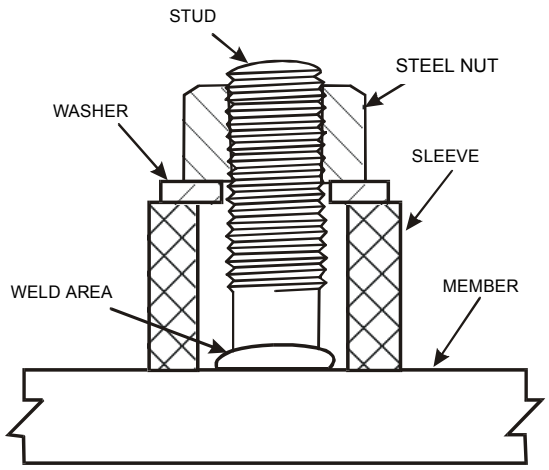

NOTE: THE DIMENSION SHALL BE APPROPRIATE TO THE SIZE OF THE STUD. THE THREADS OF THE STUD SHALL BE CLEAN AND FREE OF LUBRICANT OTHER THAN THE RESIDUE OF CUTTING OIL.

Required torque for testing Threaded studs

Nominal Diameter of Studs, In.	Threads per Inch & Series Designated	Testing Torque, ft-lb	
		Steel	Stainless Steel
1/4	28 UNF	5.0	10.9
	20 UNC	4.2	9.2
5/16	24 UNF	9.5	20.7
	18 UNC	8.6	18.7
3/8	24 UNF	17.0	37.1
	16 UNC	15.0	32.7
7/16	20 UNF	27.0	58.9
	14 UNC	24.0	52.3
1/2	20 UNF	42.0	91.6
	13 UNC	37.0	80.7
9/16	18 UNF	60.0	130.8
	12 UNC	54.0	117.7
5/8	18 UNF	84.0	183.1
	11 UNC	74.0	160.3
3/4	16 UNF	147.0	320.5
	10 UNC	132.0	287.8
7/8	14 UNF	234.0	510.1
	9 UNC	212.0	462.2
1	12 UNF	348.0	758.6
	8 UNC	318.0	693.2

Figure 7.1 — Torque Testing Arrangement and Table of Testing Torques (see 7.4.5.2)

7.4.5.2 Torque Test

Studs shall be torque tested using a torque test arrangement, see Figure 7.1. A stud application shall be considered qualified if all test specimens

are torqued to destruction without failure in the weld.

7.4.5.3 Tension Test.

Studs shall be tension tested to destruction using any machine capable of supplying the required force. A stud application shall be considered qualified if the test specimens do not fail in the weld. A suitable test fixture can be found in Appendix D.

The provisions of AWS C5.4, *Recommended Practice for Stud Welding* shall be used for additional guidance for tension testing

7.4.6 Qualification Test Data

Qualification Test Data shall include the following:

- (1) Drawings that show shapes and dimensions of studs and arc shields.
- (2) A complete description of stud and base materials, and a description (part number) of the arc shield.
- (3) Welding position and settings (current, time).
- (4) A record, which shall be made for each qualification and shall be available for each contract.

7.5 Production Control

7.5.1 Pre-Production Testing

7.5.1.1 Start of Shift

Before production welding with a particular set-up and with a given size and type of stud, and at the beginning of each day's or shift's production, testing shall be performed on the first two studs that are welded. The stud technique may be developed on a piece of material similar to the production member in thickness and properties. If actual production thickness is not available, the thickness may vary ± 25%. All test studs shall be welded in the same position as required on the production member (flat, vertical, or overhead). See Appendix D.

7.5.1.2 Production Member Option

Instead of being welded to separate material, the test studs may be welded on the production member, except when separate plates are required by 7.5.1.5.

7.5.1.3 Flash Requirement

The test studs shall be visually examined. They shall exhibit full 360° flash.

7.5.1.4 Bending/Torque Test

In addition to visual examination, the test shall consist of bending or torquing the studs after they are allowed to cool. Bend to an angle of approximately 30° from their original axes by either striking the studs with a hammer on the unwelded end or placing a pipe or other suitable hollow device over the stud and manually or mechanically bending the stud. At temperatures below 50°F, bending shall preferably be done by continuous slow application of load. For threaded studs, the torque test may be substituted for the bend test.

7.5.1.5 Event of Failure

If on visual examination the test studs do not exhibit 360° flash, or if on testing, failure occurs in the weld zone of either stud, the procedure shall be corrected, and two more studs shall be welded to separate material or on the production member and tested in accordance with the provisions of 7.5.1.3 and 7.5.1.4. If either of the second two studs fails, additional welding shall be continued on separate plates until two consecutive studs are tested and found to be satisfactory before any more production studs are welded to the member.

7.5.2 Production Welding

Once production welding has begun, any changes made to the welding set-up, as determined in 7.5.1, shall require that the testing in 7.5.1.3 and 7.5.1.4 be performed prior to resuming production welding.

7.5.3 Repair of Studs

In production, studs on which a full 360° flash is not obtained may be repaired by adding the minimum fillet weld as required by 7.3.2 in place of the missing flash. The stud:

- a) may be either removed and replaced, or
- b) rewelded by another process with a continuous weld.

7.5.4 Operator Qualification.

The pre-production test required by 7.5.1, if successful, shall also serve to qualify the stud welding operator. Before any production studs are welded by an operator not involved in the pre-production set-up of 7.5.1, the first two studs welded by the operator shall have been tested in conformance with the provisions of 7.5.1.3 and 7.5.1.4. When the two welded studs have been tested and found satisfactory, the operator may then weld production studs.

7.5.5 Removal Area Repair

If an unacceptable stud has been removed, the area from which the stud was removed shall be made smooth and flush. Where in such areas the base metal has been pulled out in the course of stud removal, an approved repair process shall be used to fill the pockets, and the weld surface shall be flush.

APPENDICES

This page intentionally blank

APPENDIX A

Code Approved Base Metals and Filler Metals Requiring Qualification per Section 4

This page intentionally blank

Appendix A
Code Approved Base Metals and Filler Metals Requiring Qualification per Section 4
Table M1 Carbon Steels

ASTM SPEC	TYPE/ GRADE	UNS NUMBER	ASTM SPEC	TYPE/ GRADE	UNS NUMBER
GROUP 1					
A27	65-35 and lower	J03000/1	A352	LCA	J02504
A29	1008 thru 1025	G10080 thru G10250	A366	-	-
A53	Type F	Unlisted	A369	FPALCB	K02501
	Type S, Gr A	K02504		FPB	K03006
	Type E, Gr A	K02504	A372	Type IFPA	K03002
A106	A	K02501		Type IIFPB	K04001
A108	1008 thru 1025	G10080 thru G10250	A381	All Classes	K03013
	G1015CW	G10150	A414	A	K01501
	G1018CW	G10180		B	K02201
	G1020CW	G10200		C	K02503
A109	1,2,3	K02500		D	K05205
	4,5	K01507		E	K02704
A135	A	-	A420	WPL6	-
	B	-	A442	55A	K02202
A139	A	-		60	K02404
	B	K03003	A512	MT1010	-
	C	K03004		1011	-
	D	K03010		MT1015	-
	E	K03012		MTX1015	-
A161	Low Carbon	K01504		1016	-
	T1	K11522		1017	-
A178	A	K01200		1018	-
	C	K03503		1020	-
A179		K01200		MT1020	-
A181	60	K03502		MTX1020	-
A192		K01201		1025	-
A210	A-1	K02707	A513	1008	-
A214		K01807		1010	-
A216	WCA	J02502		MT1015	-
	WCB	J03002		MTX1015	-
	WCC	J02503		1016	G10160
A226		K01201		1017	G10170
A234	WPB	K03006		1018	G10180
A242	Tp 1	K11510		1019	G10190
A266	Cl 1	K03506		1020	-
A283	A	-		MT1020	-
	B	-		MTX1020	-
	C	-		1021	-
	D	-		1022	-
A284	C	K02401		1023	-
	D	K02702		1024	G15240
A285	A	K01700	A515	55	K02001
	B	K02200		60	K02401
	C	K02801		65	K02800
A333	6D	K03006	A519	1008	G10080
	1	K03008		MT1010	-
A333	LCB	J03003		1012	G10120
A350	LF1	K03009			

ASTM SPEC	TYPE/ GRADE	UNS NUMBER	ASTM SPEC	TYPE/ GRADE	UNS NUMBER
GROUP 1 (cont.)					
A519	MT1015	-	A663	70	-
	MTX1015	-		75	-
	1016		A668	Cl B	G10200
	1017	G10170		Cl. C	G10250
	1018/HR/CW	G10180	A671	CC60	K02100
	1019	G10190		CE55	K02202
	1020/HR/CW	G10200		CB60	K02401
	MT1020	-		CE60	K02402
	1021	G10210		CC65	K02403
	1022/HR/CW	G10220		CB65	K02800
	1025/HR/CW	G10250		CA55	K02801
A521	C1,CC	-	A672	A45	K01700
A523	A	K02504		C55	K01800
	B	K03005		B55	K02001
A526		-		C60	K02100
A527		-		A50	K02200
A539		K01506		E55	K02202
A556	A2	K01807		B60	K02401
	B2	K02707		E60	K02402
A557	B2	K03007		C65	K02402
A562		K11224		B65	K02800
A568		-		A55	K02801
A569	30-50	-	A675	45	-
A573	70	K02701		50	-
A575	1008 thru 1025	G10080 to G10250		55	-
A576	1008 thru 1025	G10080 to G10250		60	-
A587		K11500		65	-
A619			A694		K03014
A620		K00040	A695	Tp B, Gr 35	K03504
A660	WCA	J02504	A696	B	K03200
A662	A	K01701	A709	36	
	B	K02203	A727		K02506
A663	45	-	A765	Tp I	K03046
	50	-	A827	1009	-
	55	-		1020	G10200
	60	-	MIL-S-13281	Class A	
	65	-	QQ-S-698	All Classes	
GROUP 2					
A29	1026 thru 1030	G10260 thru G10300	A266	Cl 2	K03506
A105		K03504	A299		K02803
A106	C	K03501	A321		K05501
A131	AH32	K11846		1033	G10330
	AH36	K11852		1035	-
	DH32	K11846	A350	LF2	K03011
	EH32	K11846	A352	LCC	J02505
	DH36	K11852	A372	II	K04001
	EH36	K11852	A414	F	K03102
A181	70	K03502		G	K03103
A210	C	K03501	A455		K03300
A216	WCC	J02503	K03501	Cl AQ	J02502
	A234	WPC		Cl B/BN	J03002

ASTM SPEC	TYPE/ GRADE	UNS NUMBER	ASTM SPEC	TYPE/ GRADE	UNS NUMBER
GROUP 2 (cont.)					
K03501	Cl C/CN	J02503	A618	Ia	K02601
A500	C	K02705	A633	B	-
A508	Cl. 1	K13502	A660	WCC	J02505
	Cl. a1	-	A660	WCB	J03003
A512	1030	G10300	A662	C	K02007
A513	1030	-	A668	D	G10300
	Cl 3	K05001	A671	CD70	-
	Cl 4	K03017		CC70	-
A515	70	K03101		CK75	-
A519	1026/HR/CW	G10260		CB70	-
	1030	G10300	A672	D70	-
	1035	G10350		C70	-
A521	Cl,CE	-		N75	-
A541	Cl.1	K03506	A675	70	-
	Cl. 1A	-		75	
A556	C2	K03006	A691	CMSH-70	-
A557	C2	K03505		CMS-75	-
A576	1026 thru 1030	G10260 to G10300	A695	Tp B, 40/45	-
A607	60	-	A696	C	K03200
	65	-	A709	50,50W	-
	70	-	A737	B	K12001
A611	A	-	A738	A	-
	B		A765	II	-
	C				
	D		A871	Grade 60	
	E				
GROUP 3					
A487	BQ	-	A691	CMSH-80	-
	CQ	-	A709	65	-
A633	G	-	A737	C	K12202
A668	Cl. Fa/b	-	A738	B	-
A671	CD80	-	A738	C	
A672	D80	-	A871	Grade 65	
GROUP 4					
A724	A	K11831	A724	C	-
	B	K12031			

Recommended Filler Metal Classifications for M1 Materials (See Note 1)

SMAW	AWS A5.1	E60XX, E70XX
	AWS A5.5	E70XX-X , E80XX-X
GMAW GTAW	AWS A5.18	ER70S-X
	AWS A5.28	ER80S-X
FCAW	AWS A5.20	E7XT-X
	AWS A5.29	E7XTX-X
SAW	AWS A5.17	F7XX-EXXX
	AWS A5.23	F7XX-EXX-XX F8XX-EXX-XX

Table M3 Alloy Steels

ASTM SPEC	TYPE/ GRADE	UNS NUMBER	ASTM SPEC	TYPE/ GRADE	UNS NUMBER
GROUP 1					
A204	A	K11820	A335	P2	K11547
A209	T1	K11522		P15	K11578
	T1a	K12023	A352	LC1	J12522
	T1b	K11422	A369	FP1	K11522
A213	T2	K11547		FP2	K15547
A217	WC1	J12522	A387	Gr 2, Cl1	K12143
A234	WPI	K12821	A426	CP1	J12521
A242	T-2	K12010		CP2	J11547
A250	T2	-		CP15	J11522
	T1	K11522	A672	L65	K11820
	T1a	-	A691	CM-65	K11820
	T1b	K11422		1/2 Cr, Cl1	K12143
A335	P1	K11522			
GROUP 2					
A182	F2	K12122	A672	L70	K12020
	F1	K12822		L75	K12320
A204	B	K12020		CM-70	K12020
	C	K12320		CM-75	K12320
A336	F1	K12520		1/2 Cr, Cl.2	K12143
A387	2 Cl2	K12143	A691	CM-70	K12020
				CM-75	K12320
GROUP 3					
A302	A	K12021	A519	8620	G86200
	B	K12022		8630	G86300
	C	K12039		4145H	G41450
	D	K12054		4150H	G41500
A331	4130	G41300		4340H	G43400
	8620CW	G86200		8650H	G86500
A322	4130	G41300	A533	Tp A, Cl.1	K12521
	8620	G86200		Tp A, Cl.2	K12521
	8720	G87200		Tp D,Cl.2	K12529
A505	4130	G41300		Tp B, Cl.1	K12539
A507				Tp B, Cl.2	K12539
A508	3	K12042		Tp C, Cl.1	K12554
	3a	K12042		Tp C, Cl.2	K12554
	2	K12766	A541	3	K12045
	2a	K12766		3A	K12045
	4b	K22375		2	K12765
A519	4130	G41300		2A	K12765
	4140	G41400	A829	4130	G41300

Recommended Filler Metal Classifications for M3 Materials (See Note 1)

SMAW	AWS A5.5	E80XX-X,E90XX-X,E100XX-X, E110XX-X Low-Hydrogen Only
GMAW GTAW	AWS A5.28	ER80S-X, ER100S-X
FCAW	AWS A5.29	EXXTX-X
SAW	AWS A5.23	FXXX-EXX-XX

Table M4 Miscellaneous Steels and Ferrous Alloy Steels/Cast Steels

ASTM SPEC	TYPE/ GRADE	UNS NUMBER	ASTM SPEC	TYPE/ GRADE	UNS NUMBER
GROUP 1					
A155	1CR	-	A369	FP3b	K21509
	1 1/4CR	-		FP11	K11597
A182	F11, Cl.1	-		FP12	-
	F11, Cl.2	-	A387	11, Cl. 1	-
	F11, Cl.3	-		11, Cl. 2	-
	F12, Cl.1	-		12, Cl. 1	-
	F12, Cl.2	-		12, Cl. 2	-
A199	T3b	K21509	A389	C23	J12080
	T11	K11597		C24	J12092
A202	A	K11742	A405	P24	K11591
	B	K12542	A426	CP11	J12072
A336	F11	-		CP12	J11562
	F11A	-	A541	11C	-
	F11B	-	A691	1Cr	-
	F12	K11564		1.25Cr	-
	FP11	-		1CF Cl.1	-
	FP12			1CF Cl.2	-
			A739	B11	K11797
GROUP 2					
A333	4	K11267	A423	1	K11535
				2	K11540
GROUP 3					
A148	90-60		A148	120-95	-
	105-85			150-135	-
	115-95	-			

Recommended Filler Metal Classifications for M4 Materials (See Note 1)

SMAW	AWS A5.5	E80XX-X,E90XX-X,E100XX-X, E110XX-X Low-Hydrogen Only
GMAW/GTAW	AWS A5.28	ER80S-X, ER100S-X
FCAW	AWS A5.29	EXXTX-X
SAW	AWS A5.23	FXXX-EXX-XX

Table M5 Chromium-Molybdenum Steels

ASTM SPEC	TYPE/ GRADE	UNS NUMBER	ASTM SPEC	TYPE/ GRADE	UNS NUMBER
GROUP 1 (2%-4% Cr. Typical)					
A155	2-1/4CR	-	A336	F21	K31545
A182	F21	K31545		F21a	K31545
	F22	K21590		F22	K21590
	F22a	-		F22a	K21590
A199	T4	K31509	A369	FP21	K31545
	T21	K31545		FP22	K21590
	T22	K21590	A387	21, Cl. 1	K31545
A200	T4	K31509		21, Cl.2	K31545
	T21	K31545		22, Cl.1	K21590
	T22	K21590		22, Cl.1	K21590
A213	T21	K31545	A426	CP21	J31545
	T22	K21590		CP22	J21890
A217	WC9	J21890	A487	Cl. A/B/C	J22091
A234	WP22	K21590	A508	Cl. F3V	-
A250	T22	-	A691	2-1/4 Cr., Cl. 1	K21590
A335	P21	K31545		2-1/4 Cr., Cl. 2	K21590
	P22	K21590		3 Cr., Cl. 1	K31545
				3 Cr., Cl. 2	K31545
			A739	B22	K21390
GROUP 2(4%-10% Cr. Typical)					
A182	F5	K41545	A335	P5c	K41245
	F5a	K42544		P9	S50400
	F7	S50300		P91	-
	F9	K90941		P7	S50300
A199	T5	K41545	A336	F5	K41545
	T7	S50300		F5a	K42544
	T9	K81590		F9	K81590
A200	T5	K41545	A369	FP5	K41545
	T7	S50300		FP9	K90941
	T9	S50400	A387	5, Cl.1	K41545
A213	T5	K41545		5, Cl. 2	K41545
	T5b	K51545	A426	CP5	J42045
	T5C	K41245		CP5b	J51545
	T9	S50400		CP7	J61594
	T7	S50300		CP9	J82090
A217	C5	J42025		CP22	J21890
	C12	J82090	A487	8N	J22091
A234	WP5	K41545	A542	Cl. 3, Cl.4	K21590
	WP7	-	A691	5 Cr., Cl.1	-
	WP9	K90941		5 Cr., Cl.2	-
A335	P5	K41545		F5	
	P5b	K51545			

Recommended Filler Metal Classifications for M5 Materials (See Note 1)

SMAW	AWS A5.5	E80XX-X,E90XX-X,E100XX-X, E110XX-X Low-Hydrogen Only
GMAW/GTAW	AWS A5.28	ER80S-X, ER100S-X
FCAW	AWS A5.29	EXXTX-X
SAW	AWS A5.23	FXXX-EXX-XX

Table M6 Chromium-Martensitic Steels

ASTM SPEC	TYPE/ GRADE	UNS NUMBER	ASTM SPEC	TYPE/ GRADE	UNS NUMBER
GROUP 1					
A182	F61, Cl. 1	-	A473	410	S41000
	F6a, Cl.4	-		403	S40300
	F6B	S41026		409	S40900
	F6NM	S41500,S42400	A473	410	S41000
A240	410	S41000		403	S40300
A268	410	S41000		414-T	S41400
	409	S40900	A479	403, Cl.1	S40300
				410, Cl.1	S41000
GROUP 2					
A182	F429	-	A473	429	S42900
A240	429	S42900		430	S43000
A268	429	S42900		420	S42000
				405	S40500
GROUP 3					
A182	F6a, Cl.2	-	A479	S41500	S41500
	F6a, Cl.3	-		414,temp.	S41400
	F6b	S41026	A487	CA15 Cl. B	-
A217	CA-15	J41000		CA15 Cl. C	-
A336	F6	S41000		CA15 Cl.D	-
A426	CPCA15	J91150		CA15M Cl.A	J91151
GROUP 4					
A182	F6NM	S41500	A487	CA6NM Cl. A	J91540
A240	S41500	S41500		CA6NM Cl.B	J91540
A268	S41500	S41500	A731	S41500	S41500
A352	CA6NM	J91540	A815	S41500	S41500
A479	414 temp.	-			

Recommended Filler Metal Classifications for M6 Materials (See Note 1)

SMAW	AWS A5.4	E4XX-XX
GMAW GTAW	AWS A5.9	ER4XX, ER4XX-X

Table M7 Chromium-Ferritic Steels

ASTM SPEC	TYPE/ GRADE	UNS NUMBER	ASTM SPEC	TYPE/ GRADE	UNS NUMBER
GROUP 1					
A240	405	S40500	A473	405	S40500
	409	S40900		410S	S41008
	410S	S41008		414 temp.	S41400
A268	405	S40500		420, Full Hard	S42000
	409	S40900		431 temp.	S43100
	S40800	S40800	A479	405	S40500
	430Ti	S43036			
GROUP 2					
A182	F430	S43000	A268	18 Cr-2M	S44400
A240	XM-8	-		439	S43035
	S44400	S44400	A479	XM-8	-
	430	S43000		XM-27	-
	XM-27	-		430	S43000
	XM-33	-		S44400	S44400
	439	S43035	A731	(18Cr.-2Mo)	-
A268	430	S43000		XM-8	-
	XM-8	-	A803	439	S43035
GROUP 3					
A429	XM-30	-			

Recommended Filler Metal Classifications for M7 Materials (See Note 1)

SMAW	AWS A5.4	E430
GMAW GTAW	AWS A5.9	ER430

Table M8 Chromium-Nickel Stainless Steels

ASTM SPEC	TYPE/ GRADE	UNS NUMBER
GROUP 1		
A167	301	S30100
	302	S30200
	302B	S30215
	304LN	-
	305	S30500
	308	S30800
	309	S30900
	319S	S31008
	309Cb	-
	310	S31000
	310S	S31008
	310Cb	-
	316LN	-
	316Cb	-
	317L	S31703
	XM-15	S38100
A167/A213/ A217	304	S30400
A182/336	F304	S30400
	F304H	S30409
	F304L	S30403
	F304N	S30451
	F316	S31600
	F316H	S31609
	F316L	S31603
	F316N	S31651
	F321	S32100
	F321H	S32109
	F347	S34700
	F347H	S34709
	F348	S34800
	F348H	S34809
A213	304LN	S30453
	S30600	S30600
	316H	S31609
A240	302	S30200
	304LN	S30453
	S30600	S30600
	316H	S31609
	316Cb	S31640
	316Ti	S31635
	317L	S31703
	XM-15	S34809
	XM-21	S30452
A240/A249/ A269	304H	S30409
A269	304LN	-
	316LN	-

ASTM SPEC	TYPE/ GRADE	UNS NUMBER
A270	304	S30400
A304	FP304H	S30409
	FP304N	S30451
	FP316	S31600
	FP316H	S31609
	FP316N	S31651
	FP321	S32100
	FP321H	S32109
	FP347	S34700
A312	304LN	S30453
	S30600	S31609
	316H	S31609
	317L	S31703
A351	CF3	J92500
	CF3A	J92500
	CF8	-
	CF8A	J92600
	CF3M	J92800
	CF8M/CG8M	J92900
	CF8C	J92710
	CF10/CF10M	-
A358	304LN	S30453
A358/A376 /A409	304L	S30403
	304N	S30451
	316	-
	316N	S31651
	316L	-
	316LN	S31653
	316H	-
	317	S31700
	321	S32100
	321H	S32109
	347	S34700
	347H	S34709
	348	S34800
	348H	S34809
A376	316H	S31609
	16-8-2H	S30451
A403	WP304	-
	WP304L	S30403
	WP304H	S30409
	WP304N	S30451
	WP304LN	S30453
	WP316	S31600
	WP316L	S31603
	WP 316H	S31609
	WP316N	S31651
	WP316LN	S31653

ASTM SPEC	TYPE/ GRADE	UNS NUMBER	ASTM SPEC	TYPE/ GRADE	UNS NUMBER
GROUP 1 (CON'T)					
A403	WP317	S31700	A430	FP347H	S34709
	WP317L	S31703	A451	CPF8	J92600
	WP321	S32100		CPF8A	J92600
	WP321H	S32109		CPF8C	J92710
A409	316H	-		CPF8M	J92900
	16-8-2H	-		CPF3	-
A430	FP16-8-2H	-		CPF3M	-
	FP304	S30400		CPF3A	-
GROUP 2					
A182	F10	S33100	A358	309Cb	S30940
	F45	-		310	S31000
	F310	-		310S	S31008
A213	309H	-		310Cb	S31040
	309S	-	A403	WP309	S30900
	310Cb	-		WP310	S31000
	310S	-		S30815	S30815
	309HCb	-		TP309S	S30908
	310H	-		TP309Cb	S30940
	310HCb	-		TP310S	S31008
A240	S30815	S30815		TP310Cb	S31040
	309S	S30908	A409	S30815	S30815
	309H	S30909		TP309S	S30908
	309Cb	S30940		TP309Cb	S30940
	309HCb	S30949		TP310S	S31008
	310S	S31008		TP310Cb	S31040
	310Cb	S31040	A451	CPH8	J93400
A312	S30815	S30815		CPH20	J93402
	309S	S30908		CPK20	J94202
	309H	S30909	A473	309	S30900
	309Cb	S30940		309S	S30908
	309HCb	S30941		310	S31000
	310S	S31008		310S	S31008
	310H	S31009	A479	S30815	-
	310Cb	S31040		309S	-
	310HCb	S31041		310S	S31008
A351	CH8	J93400	A813/A814	S30815	S30815
	CH20	J93400		TP309S	S30908
	CK20	J94202		TP309Cb	S30940
A358	S30815	S30815		TP310S	S31008
	309	S30900		TP310Cb	S31040
	309S	S30908			
GROUP 3					
A182	FXM-11	-	A240/A249	Type XM-18	S21603
	FXM-19	S20910		S21800	S21800
A213/ A249	201	-		Type XM-29	S24000
A240 /A249	Type 2 201-1	S20100	A312	XM-11	-
	Type 202	S20200		XM-19	20910
	Type XM-19	S20910		XM-29	S20400
	Type XM-17	S21600			

ASTM SPEC	TYPE/ GRADE	UNS NUMBER	ASTM SPEC	TYPE/ GRADE	UNS NUMBER
GROUP 3 (CON'T)					
A336	FXM-19	S20910	A479	XM-19	S20910
	FXM-11	S21904	A666	201	S20100
	S21800	S21800		XM-11	S21904
	XM-11	S21904	A688	XM-29	S24000
	XM-29	S24000	A813/A814	TPXM-19	S20910
A351	CG6MMN	J93790		TPXM-11	S21903
A358	XM-19	S22100		TPXM-29	S24000
	XM-29	S28300	S20100	XM-17	S21600
A403	WPXM-19	S20910	S21904	XM-18	S21603
GROUP 4					
A182	F44	-	A336	F46	-
			A358	S31254	S31254
A213	S01815	S01815		S31725	S31725
	S31725	S31725		S31726	S31726
	S31726	S31726	A376	S31725	S31725
A240/A249	S31254	S31254		S31726	S31726
	S31725	S31725	A479	S31254	S31254
	S31726	S31726		S31725	S31725
A312/A409	S31254	S31254		S31726	S31726
	S31725	S31725	A813/A814	S31254	S31254
	S31726	S31726			

Recommended Filler Metal Classifications for M8 Materials (See Note1)

SMAW	AWS A5.4	E3XX-X
GMAW/GTAW	AWS A5.9	ER3XX
FCAW	AWS A5.22	E3XXT-X

Table M11 Quench and Temper/Age Hardening Alloy Steels

ASTM SPEC	TYPE/ GRADE	UNS NUMBER	ASTM SPEC	TYPE/ GRADE	UNS NUMBER
GROUP 11A — Subgroup 1					
A333	8	K81340	A522	Tp. I	K81340
A334	8	K81340		Tp. II	K71340
A353		K81340	A553	Tp. I	K81340
A420	WPL8	K81340		Tp. II	K71340
GROUP 11A — Subgroup 2					
A645		K41583			
GROUP 11A — Subgroup 3					
A487	Cl. 4Q		A487	Gr. 4, Cl. B	J13047
	Cl. 4QA			Gr. 4, Cl. E	J13047
GROUP 11A — Subgroup 4					
A533	Cl.3 A	K12521	A533	Cl.3 D	K12529
	Cl.3 B	K12539	A672	J100	K12521
	Cl.3 C	K12554			
GROUP 11A — Subgroup 5					
A508	Cl. 4	K22375	A352	LC2-1	J42215
	Cl. 4a	K22375	A543	Cl. 3 B	K42338
	Cl. 5	K42365		Cl. 3 C	K42338
	Cl. 5a	K42365		Cl. 1 C	K42338
GROUP 11A — Subgroup 6					
A542	Cl. 1	-	A543	Tp. B Cl.3	-
	Cl. 2	-		Tp. C Cl.1	-
A543	Tp. B Cl. 1	-		Tp. C Cl.2	-
	Tp. B Cl.2	-		Tp. C Cl.3	-
GROUP 11A-1					
Mil-S-16216	HY-80	J42015	Mil-S-24451	HY-80	K31820
	HY-100	J42240		HY-100	-
Mil-S-23008/9	HY-80	J42015	Mil-S-21952	HY-80	K31820
Mil-S-23284		-		HY-100	K32045
GROUP 11B — Subgroup 1					
A514	All Grades	Various	A709	100	-
A517	A	K11856	A709	100W	-
	G	K11872			
	H	K11646			
	K	K11523			
	L	K11682			
	Q	-			
GROUP 11B — Subgroup 2					
A513	E	K21604	A592	E	K11695
A517	All Grades	K21604			
GROUP 11B — Subgroup 9					
A592	9630	-	A709	G100/G100Q	
GROUP 11B-1					
Mil-S-24371	HY-130	K51255			
GROUP 11C					
Mil-S-24645	HSLA 80	-	Mil-S-13281	B Cl. 2	-
Mil-S-13281	A	-		C	-
	B Cl. 1	-	A710	A, Cl. 1 and 3	-
GROUP 11D					
Mil-S-24645	HSLA 100	-			

Recommended Filler Materials Classifications for M11 Materials (See Note 1)

SMAW	AWS A5.5	E80XX-X,E90XX-X,E100XX-X E110XX-X,E120XX-X
GMAW/GTAW	AWS A5.28	ER1XXS-1,ER1XXS-2
FCAW	AWS A5.29	E10XTX-X, E11XTX-X
SAW	AWS A5.23	F8XX-EXX-XX,F10XX-EXX-XX, F11XX-EXX-XX

Note 1 The specified filler metal will be identified on the applicable PQRs and WPSs. Dissimilar metals joining will use industry-recommended filler metals.

This page intentionally blank

APPENDIX B
Welding of Armor Steel

This page intentionally blank

Appendix B — Welding of Armor Steel

B1 INTRODUCTION

This appendix establishes the methods for the welding of homogeneous steel armor, ballistic test requirements, and inspection criteria for evaluation of weldments employed in the fabrication of homogeneous steel armor.

B1.1 Application

B1.1.1 For all existing engineering drawings, the current specifications, MIL-STD-1941, or MIL-STD-1185, or their predecessors shall be equivalent to this requirement, provided the weld joint is shown in Appendix B.

B1.1.2 This class of weld is applicable to weld joints that are critical to the ballistic integrity of a structure. Weld joints that are not exposed to ballistic attack may be specified with non-ballistic weld classes. Non-ballistic weld classes, as defined In 6.6.1 (non-critical) and 6.6.2 (critical), may be specified for those weld joints which are not critical to the ballistic integrity of a structure.

B1.1.3 In all drawings subsequent to this code, the weld instruction on the appropriate drawing or technical data package shall be:

"Weld in accordance with Drawing 12479550, Ground Combat Vehicle Welding Code – Steel, "Ballistic Welds".

B1.2 Base Metal

B1.2.1 The base metal to be welded under this code shall be limited to those listed below:

- (1) MIL-A-11356 Armor, Steel, Cast, Homogeneous, Combat Vehicle Type (1/4 to 8 inches, inclusive)
- (2) MIL-A-12560 Armor, Steel Plate, Wrought, Homogeneous, Combat Vehicle Type (1/4 to 6 inches, inclusive)
- (3) MIL-A-46100 Armor Plate, Steel, Wrought, High Hardness
- (4) MIL-A-46177 Armor, Steel Plate and Sheet, Wrought, Homogeneous (1/8 to less than 1/4 inch thick)

B1.2.2 Combinations of armor and non-armor base metals may be welded together, provided the welding procedures are qualified in accordance with Section 4 of this code.

B1.2.3 Extension bars, and run-offs shall be of the same material as qualified on the PQR.

B2 REFERENCED DOCUMENTS

B2.1 Issues of Documents

The following documents, in addition to those of Section B1.2.1, of the issues in effect on date of the contract form a part of this appendix to the extent specified herein.

B2.1.1 Military Documents

MIL-STD-1894 Radiographic Reference Standards and Radiographic Procedures for Partial-Penetration Steel Welds.

B2.1.2 Other Publications

The following documents form a part of this appendix to the extent specified herein.

B2.1.2.1 American Society for Testing And Materials (ASTM)

- ASTM E142 Standard Method for Controlling Quality of Radiographic Testing
- ASTM E165 Standard Practice for Liquid Penetrant Inspection Method
- ASTM E340 Macroetching Metals and Alloys
- ASTM E390 Reference Radiographs for Steel Fusion Welds
- ASTM E1444 Standard Practice for Magnetic Particle Examination

B2.1.2.2 American Welding Society (AWS)

- ANSI/AWS A5.2 Carbon and Low Alloy Bare Gas Welding Rods
- ANSI/AWS A5.4 Stainless Steel Covered Arc Welding Electrodes
- ANSI/AWS A5.5 Low Alloy Steel Covered Arc Welding Electrode
- ANSI/AWS A5.17 Carbon Steel Electrodes and Fluxes for Submerged Arc Welding
- ANSI/AWS A5.18 Carbon Steel Electrodes for Gas Shielded Arc Welding
- ANSI/AWS A5.20 Carbon Steel Electrodes for Flux Cored Arc Welding
- ANSI/AWS A5.22 Flux Cored Corrosion-Resisting and Cr-Ni Electrodes
- ANSI/AWS A5.23 Low Alloy Steel Electrodes and Fluxes for Welding
- ANSI/AWS A5.28 Low Alloy Steel Electrodes for Gas Shielded Arc Welding
- ANSI/AWS A5.29 Low Alloy Steel Electrodes for Flux Cored Arc Welding

B2.1.2.3 American National Standards Institute (ANSI)

- ANSI Y14.5 Dimensioning and Tolerancing

B3 REQUIREMENTS

B3.1 Weldments

The steel armor and steel for attachments to be used in the fabrication of weldments shall conform to the requirements of the applicable drawing, contract or order. Deviation in specified compositional requirements for materials shall not be permitted unless specifically approved by the procuring activity.

B3.2 Armor

Unless otherwise specified in the contract, order or drawing, steel armor shall be welded in the fully heat-treated condition.

B3.3 Preparation of Welding Procedures and Drawings

Prior to the production fabrication of any weldment, the contractor shall prepare, in accordance with DoD-D-1000, a drawing of the structure showing the location of each joint. The contractor also shall establish a welding procedure specification (WPS) to cover all welding (including a general outline for the repair of base metal and welded joints) to be performed under this document. These documents require the approval of the procuring activity.

B3.4 Welders or Welding Operator

B3.4.1 Test Plate Requirements

As a minimum for determining qualification, the welders shall weld the specimen shown in Figure B3.1. The test plate must be at least 12 inches in length and may be made from Appendix A, M1 or armor material. For positions and processes see section 4 of this code.

B3.4.2 Test Plate Acceptance

All test plate shall be visually inspected per Table 6.1, Critical and Ballistic prior to radiographic inspection.

All test plate shall be radiographically evaluated to Table B3.3. The first and last inch of the test plate are excluded from evaluation.

B3.5 Ballistic Requirements

The specific information required for ballistic weld qualification shall be prepared in duplicate on a form included in Appendix C. The cover sheet shall be signed by the manufacturer and the contractor and shall be submitted to the procuring activity for review and approval.

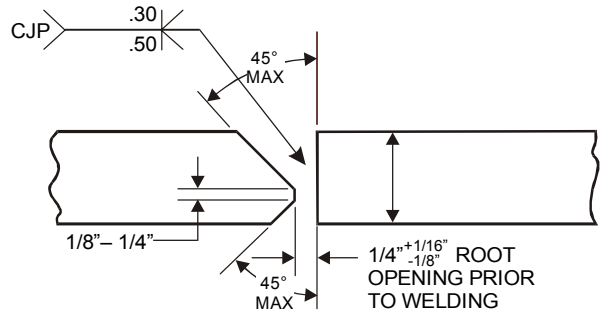

Figure B3.1 — Specimen for Ballistic Armor Welder Qualification (see B3.4)

B3.5.1 Heating of Weldments

Welding shall not be performed when the ambient temperature of the weldment is below 55°F. Unless otherwise specified on the drawing or by the procuring activity, general or local preheating, post heating and interpass temperature shall not be performed above 500°F, nor shall the time at temperature exceed 1/2 hour per inch of material thickness. Mil-A-46100 materials shall be restricted to a maximum of 300°F for preheat and interpass temperature

B3.5.2 Welding Attachments to Armor

Ballistically qualified weld procedures shall provide qualification of welding attachments to armor, provided a macro specimen is approved by an authority defined in 6.1.3.1. Preheat above 60 degrees F is not required for M1 and M8 attachments with maximum 3/8" single pass weld.

B3.6 Ballistic Test Plates

B3.6.1 Submission

The forms illustrated in Appendix C shall be used for ballistic qualification test plate submission.

The completed forms with a cover letter shall be submitted to the procuring activity for review. The cover sheet shall include the contract number, a description of the vehicle weldment, and the date submitted. The cover sheet shall be signed by the contractor and the manufacturer, if other than the contractor.

The ballistic test plate and the forms listed below shall be forwarded to the TACOM–approved test agency.

- Armor Welding Data Sheet 1
- Armor Welding Data Sheet 2
- Armor Welding Data Sheet 3 (Radiographic Report)

B3.6.2 Macro Specimens

One macro specimen shall be made for each type of joint included in the welding procedure. This specimen may be cut from the ballistic test plate so long as the dimensions of Figure B3.2 are met. As an alternative, the sample may be fabricated from the material type(s) listed in Table 3.1 or Appendix A, Table M1 Materials (all groups).

B3.7 Ballistic Testing Requirements

B3.7.1 Test Plates

Dimensions The minimum test plate shall be constructed to the form and dimensions shown in Figure B3.2. The thickness of the ballistic test plate relative to the joint thickness of the plate shall be as shown in Table B3.1.

B3.7.2 Number of Test Plates

Joint Types When joint types shown in Figures B3.4, B3.5, B3.6, B3.7, B3.8, B3.9 or B3.10, or when partial penetration groove welds are included in a welding procedure, one ballistic test plate of the maximum "T" thickness (not to exceed 1-1/2 in.) and one test plate of the minimum "T" thickness, not less than 1/2 in., involved in any one of these joint types shall be prepared. For MIL-A-46100 material, the maximum thickness ballistically tested shall not exceed 1/2 in.

Different Armors Ballistic test plates shall be prepared for each type and class of armor used. A combination of armor materials may be tested to qualify more than one armor material type with one test.

B3.7.3 Fabrication of Test Plates

Groove Joint Types of Figures B3.4 and B3.5 The test plates shall conform to the design of Figure B3.4, Type 1, with the minimum included angle, minimum root opening, and maximum root face specified in the dimensional requirements in the welding procedure specification.

Groove Joint Types of Figures B3.6 and B3.8 The test plates shall conform to the design for the joint type of Figure B3.5, with the minimum included angle, minimum root opening and maximum root face specified in the dimensional requirements in the welding procedure specification.

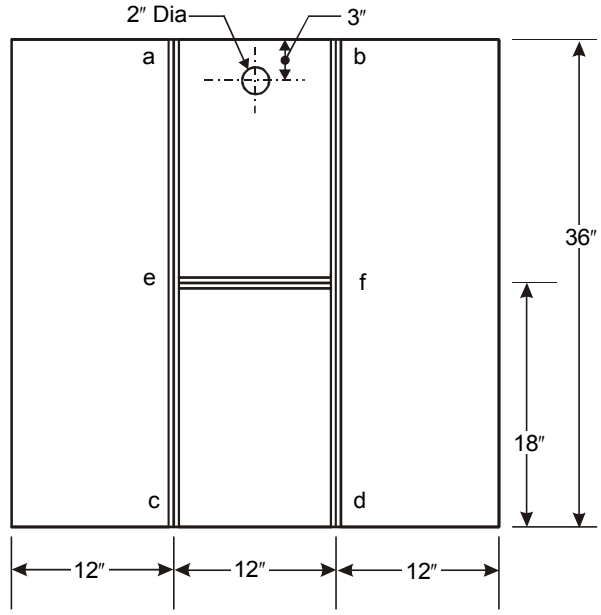

Figure B3.2 — Ballistic Test Plate (see B3.6.2 and B3.7.1)

Table B3.1
Thickness of Ballistic Test Plates (see B3.7.1)

Maximum or minimum "T" thickness of plate in joint, in.	Thickness of ballistic test plate[1,2,4] in.
1/8 to 3/4 excl.	1/2[3]
3/4 to 1-1/8 excl.	1
1-1/8 to 1-3/8 excl	1-1/4
Equal or greater than 1-3/8	1-1/2

Notes:
1. For cast and rolled armor, the material thickness specification shall be applied.
2. Before welding, cast or rolled plates 18 by 40 in. or smaller, shall have a maximum out-of-flatness tolerance of 1/16 in. in any direction. Plates 36 by 36 in. shall have a maximum out-of-flatness tolerance of 1/8 in. in any direction.
3. For cast armor, 1 in. plate shall be used.
4. Ballistic test plate thickness may equal the armor thickness for production use provided it is no less than 1/2 in. or no more than 1-½ in. Striking velocities shall be adjusted in accordance with footnotes 1(a) and 1(b) of Table B3.2.

Table B3.2
Requirements for Ballistic Tests (see B3.7.6)

Thickness of plate, in.	Type of homogeneous armor	Projectile	Striking Velocity[1], f/s + 25 f/s	Maximum Allowable Weld Cracking[2], in.
1-1/2	Rolled	75 mm PP M1002	1200	15
1-1/2	Cast	75 mm PP M1002	1050	10
1-1/4	Rolled	75 mm PP M1002	1080	15
1-1/4	Cast	75 mm PP M1002	945	10
1	Rolled	57 mm PP M1001	1050	9
1	Cast	57 mm PP M1001	975	6
1/2	Rolled	37 mm HE M54	2526	15

Notes: 1 If the actual plate thickness is more than the nominal thickness, the test striking velocity shall be increased. If the actual plate thickness is less than the nominal thickness, the test striking velocity shall be decreased.
a. For cast armor only the correction factor shall be 6 f/s of velocity for each 0.01 in. deviation in plate thickness.
b. For rolled armor only the correction factor shall be 7 f/s velocity for each 0.01 in. deviation in plate thickness.
2 Typical crack situations are illustrated in Figure B3.3

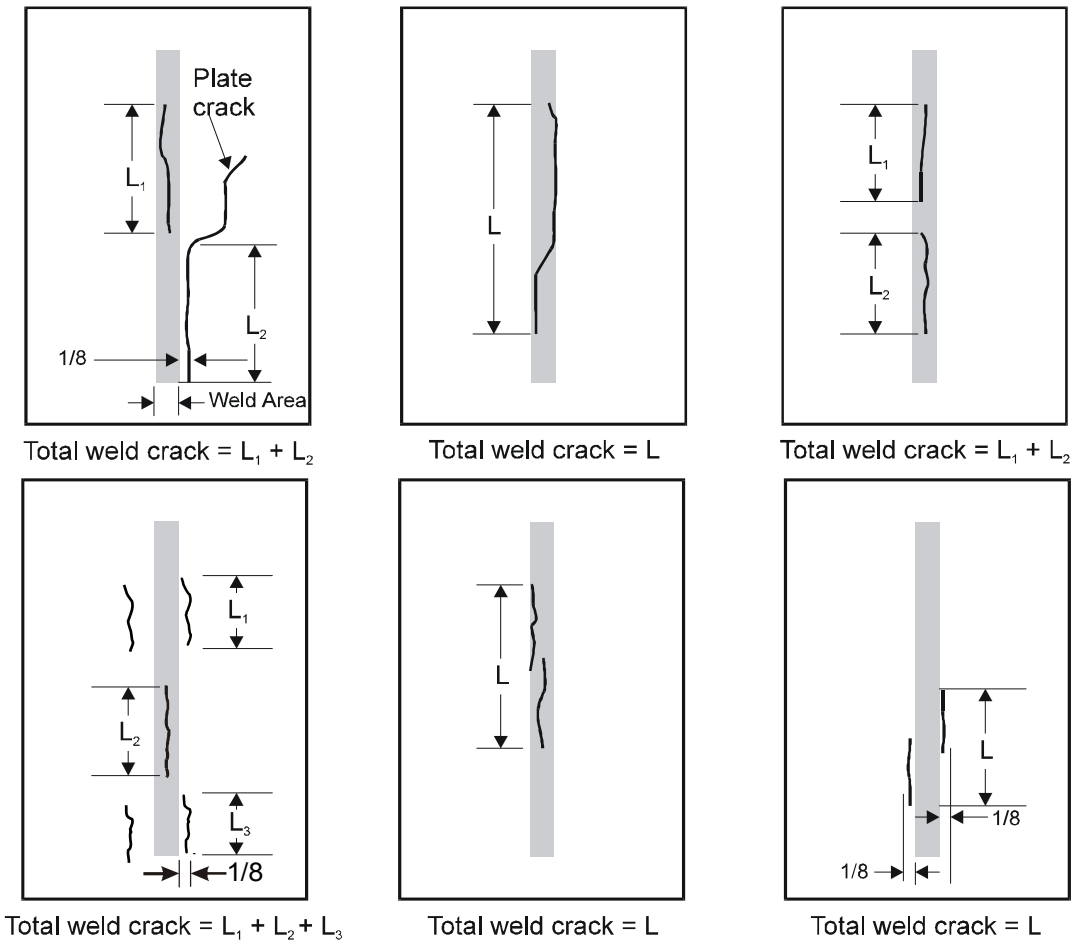

Figure B3.3 — Examples of Weld Cracks That Can Occur From Projectile Impact, and Indication of Measurement of Total Weld Crack for Acceptance Purposes (See B3.7.5 and Table B3.2)

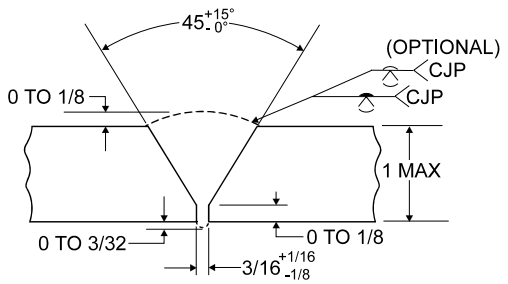

Type 1 Ballistic Joint

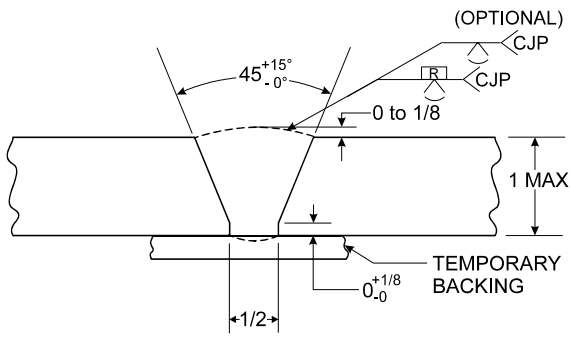

Type 2 Ballistic Joint

Figure B3.4 — Single Groove Welds (see B3.7.2)

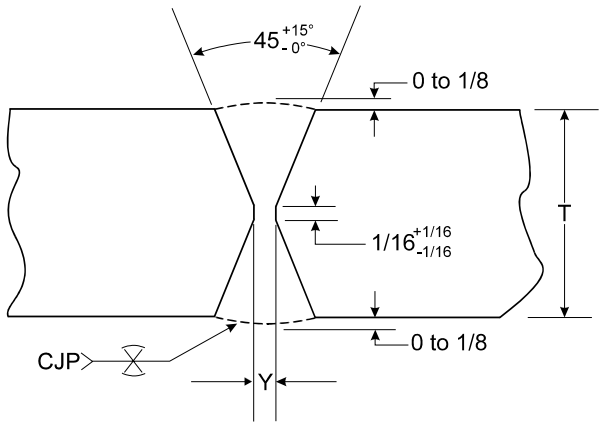

Joint No.	Design Opening, Y (+3/16, -1/16 Inch)	Plate Thickness, T (Inch)
3A	3/16	3/8 to 1
3B	1/4	>1 to 1 1/2
3C	5/16	>1 1/2

Figure B3.5 — Type 3 Ballistic Joint (see B3.7.2)

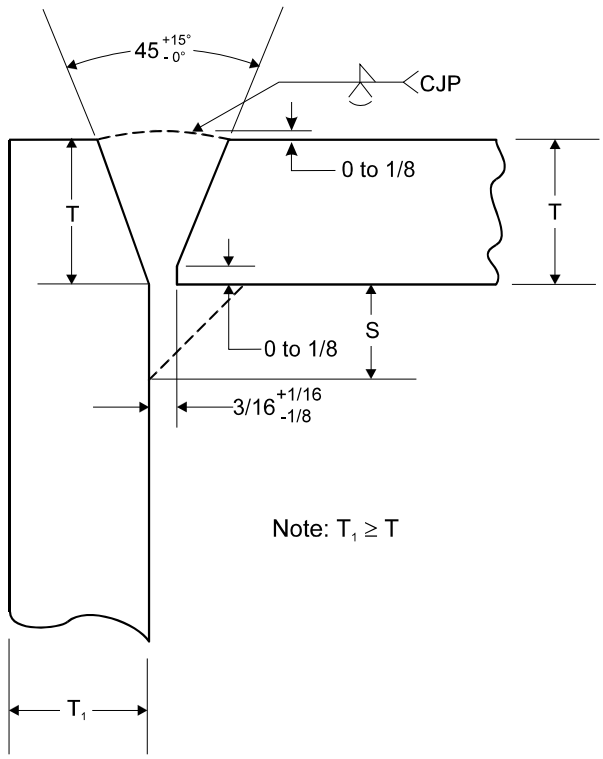

Joint No	Plate Thickness, T (Inch)	Min. Fillet Size, S (Inch)
4A	<3/8	3/16
4B	3/8 to 5/8	1/4
4C	>5/8 to 1	5/16

Figure B3.6 — Type 4 Ballistic Joint (see B3.7.2)

Groove Joint Types of Figures B3.7 and B3.9 The test plates shall conform to the design for the joint type of Figure B3.5, with the minimum included angle, minimum root opening and maximum root face specified in the dimensional requirements in the welding procedure specification.

Preparation of the Ballistic Test Plate Each ballistic test plate shall be welded in accordance with the contractor's welding procedure. The ballistic test plate, shown in Figure B3.2, shall be prepared by welding sections "ac" and "bd" completely on both sides before welding crossbar "ef". Each section and the crossbar shall be started at the same preheat or ambient temperature, ± 5°F.

Welding in the crossbar prior to completion of the legs `shall not extend for more than 2 in. in either direction and shall be prepared in such a manner to leave at least 8 in. of continuous, open groove before starting to weld the crossbar. For all welding, the interpass temperature of the plate shall not exceed the maximum allowable interpass temperature as stated in the welding procedure. The interpass temperature of the base metal shall be measured immediately before deposition of each bead at a point lying approximately 3 in. from the center of each weld joint.

Identification Marking of Test Plates Each ballistic test plate shall be marked clearly for easy identification on the front surface of the plate.

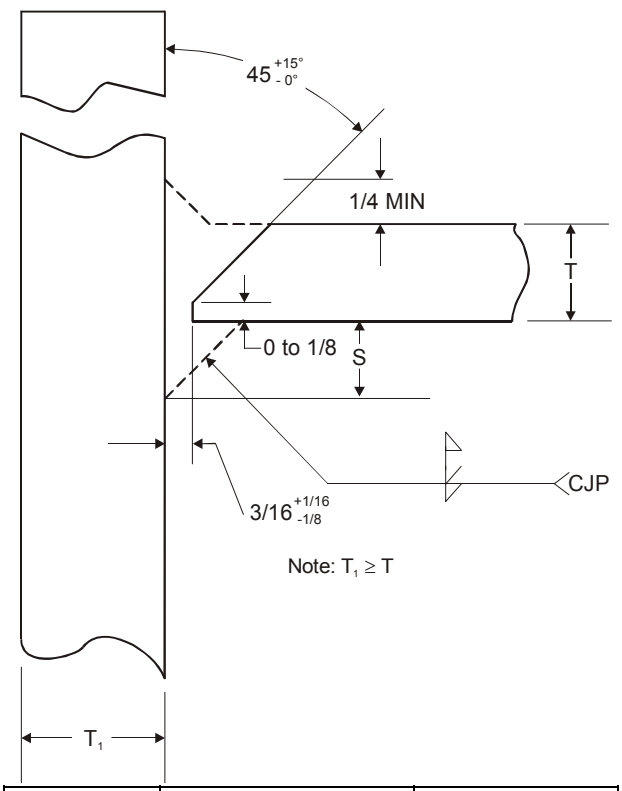

Joint No.	Plate Thickness, T (Inch)	Min. Fillet Size, S Inch
5A	<3/8	1/4
5B	>3/8 to 5/8	3/8
5C	>5/8 to 1	1/4

Figure B3.7 — Type 5 Ballistic Joint (see B3.7.2)

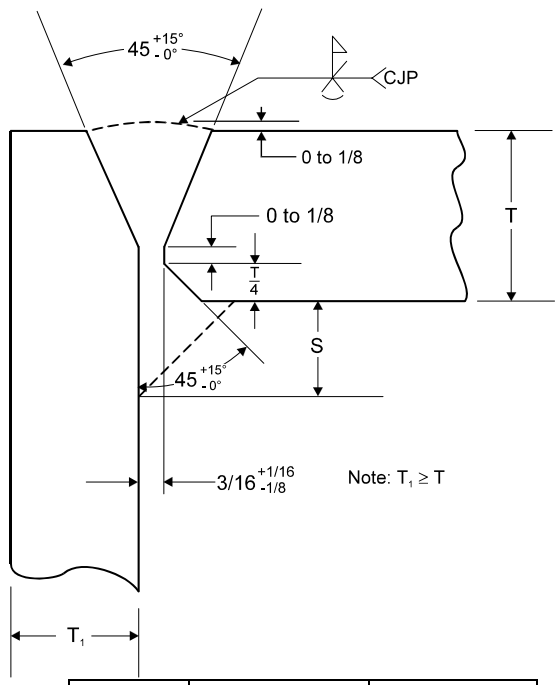

Joint No.	Plate Thickness, T (Inch)	Min. Fillet Size, S (Inch)
6A	3/8 to 5/8	1/4
6B	>5/8 to 3/4	3/8
6C	>3/4 to 1 1/2	1/2
6D	>1 1/2	1/2

Figure B3.8 — Type 6 Ballistic Joint (see B3.7.2)

Marking shall be in letters not less than 1 in. high and shall include the number of the plate, the manufacturer's name, the contractor's name, and a designation showing the front of the plate. The number of the plate and the contractor's name shall also be stamped into the metal or painted in the upper right corner. All markings shall be fully legible. Painted markings shall not be obliterated in normal handling. The front of the ballistic plate shall be determined as follows:

- *a. Double Groove Joints* The front of the ballistic test plate is considered to be the surface on which welding (excluding tacking) is begun on each leg and on the crossbar.
- *b. Single Groove Joints* The front of the ballistic test plate is considered to be the outside or ballistically exposed surface containing the wide side of the groove.

Marking of Retest Plates When two ballistic test plates are submitted for retest, both shall be marked with the number of the original rejected plate as well as the new numbers with the suffix “R” indicating retest.

B3.7.4 Ballistic Test Requirements

A properly executed checklist for armor data as shown in this appendix shall be submitted with each ballistic test plate.

B3.7.5 Ballistic Testing

Unless otherwise specified, ballistic test plates shall be forwarded to the TACOM approved test agency.

Allowable cracking The ballistic test plates shall meet the weld cracking requirements of Figure B3.3 after being subjected to ballistic shock.

Magnetic particle or dye penetrant test In borderline cases, where crack length measured by visual observation is close to the maximum allowable, the area in the vicinity of the crack ends shall be inspected with magnetic particles in accordance ASTM-E1444 or with liquid dye penetrant in accordance with ASTM-E165, to assure an accurate determination of the crack length.

B3.7.6 Test Method

The ballistic test plates shall be supported solidly on each of the two sides normal to the line of fire and parallel to the longest welds, with these welds upright and subjected to ballistic shock in accordance with Table B3-2. Plates of thicknesses not covered by Table B3-1 shall be tested as directed by the procuring activity.

Test Decision on Additional Impacts When a test plate is declared “no test”, as defined in paragraph B3.7.7, Part C, after being shocked by the impact of the first projectile, but the condition of the plate will permit additional impacts, the plate shall be evaluated on the results of the first additional impact meeting the requirements for velocity and location in accordance with the following criteria:

- a. When cracking exceeds that allowed by Table B3.2, the qualification decision shall be “no test”.
- b. When cracking does not exceed that allowed by the specification, the qualification decision shall be “satisfactory”.

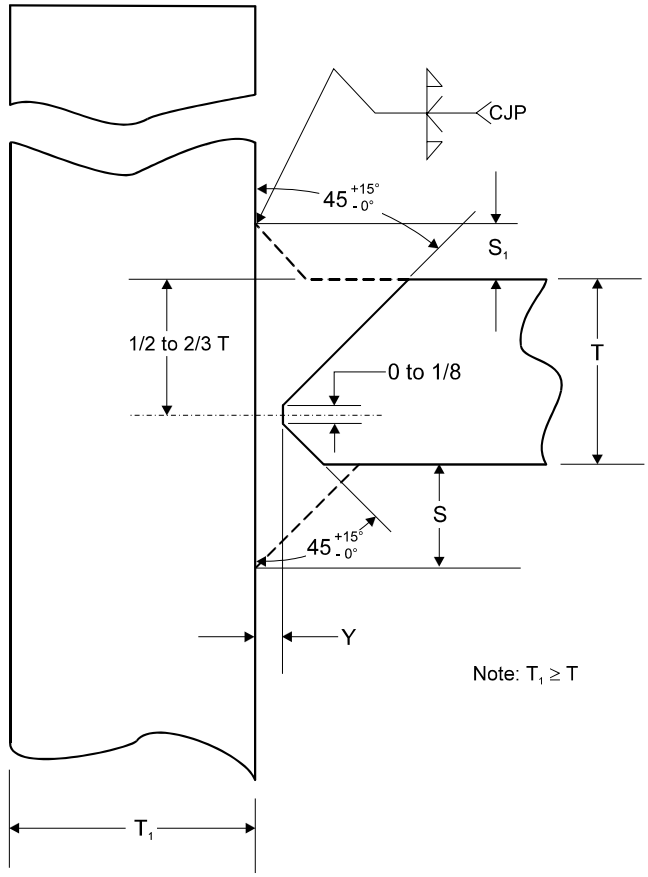

Joint No	Design Opening, Y, (Inch)	Plate Thickness , T, (Inch)	Min. Fillet Size, S, (Inch)	Min. Fillet Size S_1, (Inch)
7A	3/16	3/8	1/4	1/4
7B	3/16	1/2	5/16	1/4
7C	3/16	5/8	3/8	1/4
7D	3/16	3/4	1/2	3/4
7E	1/4	1	5/8	5/16
7F	1/4	1 1/4	3/4	5/16
7G	1/4	1 1/2	7/8	5/16
7H	5/16	> 1 1/2	7/8	5/16

Figure B3.9 — Type 7 Ballistic Joint (see B3.7.2)

- c. *Direct Impact* The direct impact of the 75-mm PP M1002 or the 57-mm PP M1001 shall contact a part of the weld to be considered as conforming to the requirements of the ballistic test. Contact of the weld by any part of the

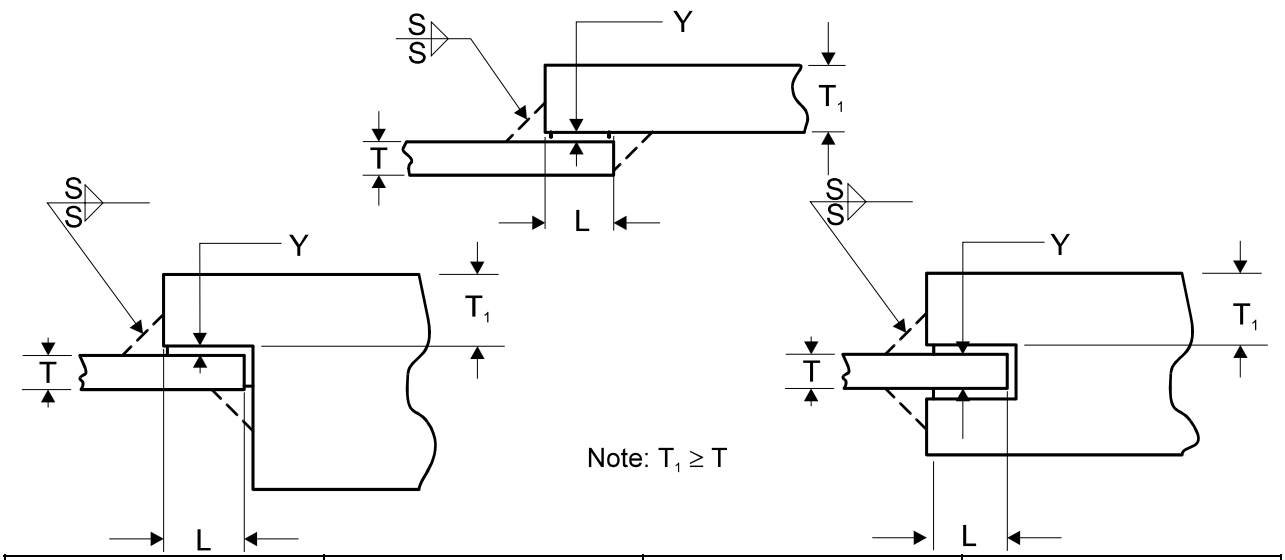

Joint No.	Plate Thickness, T (Inch)	Min. Flange Lap, L (Inch)	Min. Fillet Size, S (Inch)
10A	<3/8	1/4	3/16
10B	3/8 to 5/8	5/16	5/16
10C	5/8 to 1	3/8	1/2
10D	1 to 1 1/2	1/2	7/8
10E	>1 1/2	5/8	1

Figure B3.10 — Type 10 Continuous Fillet Weld Ballistic Joint (see B3.7.2)

projectile that spreads after impact will not satisfy the test requirements.

- d. *Point of impact* The point of impact of the 37 mm HE projectile M54 shall be within 1-3/4 in. of the weld, as measured from the center of the point of impact to the center of the weld, to be considered as conforming to the requirements of the ballistic test.
- e. *Unacceptable and acceptable impacts* Impacts less than 6 in. from the top or bottom edge of the plate that cause excessive weld or plate cracking shall be considered as failing to meet the requirements of the test. If, however, the cracking is not excessive and the requirements of parts c and d above are met, the impact shall be considered as acceptable.

B3.7.7 Evaluation of Test Results

The plates shall not exceed the requirements for maximum weld cracking specified in Table B3.2 and are subject to the interpretations in a and c, below.

- a. *Parallel Cracks* Cracks in the armor parallel to the weld and within 1/8 inch of the edge of the weld shall be considered as part of the total weld cracking area.
- b. *Cracks Outside the Acceptable Limits For Impacts* Any length of weld cracking revealed as a result of an impact which does not conform with paragraph B3.7.6 parts c or d, whichever is applicable, but which is otherwise acceptable per paragraph B3.7.6 part e shall be cause for rejection of the welding procedure.
- c. *Conditions For a "No Test" Decision* When test conditions are such that the level of performance of welding procedure represented by the plate cannot be determined, a "no test" decision shall be rendered. The conditions for this decision are as follows:
  - The point of impact of the projectile is not located within the distance limits specified in paragraph B3.7.6, parts c or d, and cracking in excess of specified limits does not occur.

- The striking velocity of the projectile is above the maximum allowed and excessive cracking occurs.
- The striking velocity of the projectile is below the minimum allowed and excessive cracking does not occur.
- The location of the center of impact of the projectile is less than 6 in. from the top or bottom edge of the plate and excessive cracking occurs.
- Excessive cracking occurs from an impact subsequent to the first impact when more than one is required.
- Cracks in the plate occur which are greater than 6 in. and do not pass through the center of impact.
- Cracking of the plate occurs outside a circle of 6 in. radius, the center of which is the center of impact, and excessive weld cracking has not occurred. In this event the cracked plate shall be subjected to a ballistic limit test in accordance with the applicable material specification. If the plate passes the ballistic limit requirements, the welding procedure is acceptable, otherwise (ballistic limit failure) a "no test" decision shall be rendered.

B3.7.8 Visual Examination of Test Plates

All welds in the ballistic test plate shall be examined visually before shipment to the designated proving ground. All welds shall be acceptable to Table 6.1.

B3.7.9 Radiographic Inspection of the Test Plate

Prior to the ballistic shock test, the welded joints in each test plate shall be inspected radiographically by an authorized representative of the Government. Full penetration welds shall be inspected for conformance Table B3-3 and ASTM E-390, with the direction of radiation parallel to the weld interface, then normal to the weld face, and finally parallel to the opposite weld interface. Partial penetration welds shall be inspected for conformance to MIL-STD-1894, Level 3. Radiographs shall be subject to review by the test agency, and its decision as to acceptability shall be final. The test agency may make additional radiographic inspections at its option. Should the test plate fail to pass the radiographic inspection, the ballistic shock test shall not be performed until after the defective weld area(s) has (have) been repaired by the fabricator.

B3.7.10 Repair of Test Plate

Weld repair on a test plate shall not exceed a total length of 8 in. The same area shall not be repaired more than twice. The reason(s) for, extent of, and location of repairs shall be reported on a separate sheet of paper and attached to the checklist for armor.

B3.7.11 Rejection of Ballistic Test Plate

Failure of any ballistic test plate to pass either the ballistic test or the radiographic inspection at the test agency shall be cause for rejection of the welding procedure.

B3.7.12 Retests

Retests may be made upon the request of the contractor. Two additional test plates shall be made using the welding procedure and marked in accordance with paragraph B3.7.3, "Identification Marking of Retest Plates", and submitted to the test agency for retest. Failure of either or both of these plates shall be cause for rejection of the welding procedure represented.

B3.8 Radiographic Procedure

B3.8.1 Radiographic Drawings

A radiographic drawing shall be submitted to the cognizant procuring activity for review in establishment of radiographic standards. The radiographic drawing shall be prepared by the design agency containing the following:

- a. Identification, by letter or number, of the joint(s) to be radiographed.
- b. Identification of positions by letter or number.
- c. Cross-section of the joint(s) showing the identification and type of the joint(s), either by symbol, letter, or number.
- d. A table entitled "Routine Positions"
- e. A table entitled "Random Positions"
- f. Notes, reading as follows:

  1. All radiographs shall conform to the acceptance requirements of Table B3-3 and ASTM E390 or MIL-STD-1894, Level 3, as applicable, unless otherwise specified.
  2. Radiography shall be performed in accordance with section 6 and ASTM E142.
  3. "Random position, left side" will be radiographed alternately with "random position, right side" on consecutive weldments taken from production for radiographic inspection

within the limits established in paragraphs B3.9.2, parts a through e.

4. "Routine position, left side" will be radiographed alternately with "routine position, right side" on consecutive weldments taken from production for radiographic inspection within the limits established in paragraph B3.9.2, parts a through e.

B3.8.2 First Production Weldment

Radiographic examination shall be performed on all joints identified on the radiographic drawing and shall comply with the acceptance requirements specified in paragraph B3.8.1, part f, subpart 2 unless otherwise specified by the contract.

- a. *Film and Position Chart* The films for the first production weldment shall be available for review by the procuring activity with the radiographic position chart (see B3.8.1) to which the following information has been added:
  - Location of film.
  - Direction of radiation.
  - Equipment used.
  - Type of film.
  - Size and location of filter.
  - Focal-film distance.
  - Processing procedure for film.
  - Applicable radiographic standard(s).
- b. *Radiographic Procedure* With the additions shown in paragraph B3.8.2 a, above, the chart becomes a radiographic procedure and, in conjunction with the radiograph of the initial weldment, becomes the basis for establishing the radiographic frequency to be used in production.

B3.9 Inspection of Production Weldments

B3.9.1 Visual Inspection

All ballistic welds shall be inspected to the requirements of Table 6.1, Critical Welds.

B3.9.2 Radiographic Inspection

The frequency of spot-checking and selection of the standard should be based on the importance of the particular joint in the vehicle.

- a. *Spot Checking* Joints subject to direct ballistic attack shall be spot checked by radiography in accordance with b through e, below.
- b. *Selection of Joints for Radiography* Radiography shall be performed on specific joints, with a frequency to be determined by the drawings or contract documents, and dispositioned in accordance with paragraph B3.8.1, part f. Thus, spot checking will not require radiographing of all joints in a single weldment.
- c. *Rejectable Joints* When the radiographic spot check of a weldment indicates a transverse crack(s) in a particular joint, the remainder of the joint shall be radiographed. When other rejectable defects are discovered, the positions adjacent to the initial rejected position (or at the other end of the joint if the rejected position is located at the end of a joint) shall be radiographed. All defects then found in the joint shall be repaired and these repaired areas subsequently radiographed. The repaired areas shall conform to the radiographic standard established for the joint.
- d. *Corresponding Joints* On the next weldment designated for spot checking, the position(s) found rejectable in c, above, will require spot checking in addition to the other position(s) selected for radiography. Should a rejectable defect be found, the remainder of the joint shall be radiographed. All rejectable defects then found in the joint shall be repaired, and the repaired areas subsequently radiographed. The repaired areas shall conform to the radiographic standard established for the particular joint.
- e. *Checking of Consecutive Weldments* When the radiographs required by d, above, indicate a rejectable defect, the corresponding joint on the next weldment shall be completely radiographed. If no rejectable defects are found, spot checking will be resumed. If rejectable defects are found, the corresponding joint on the next weldment immediately following in production shall be completely radiographed. Complete radiography of the corresponding joint shall be continued with each consecutive weldment produced until a joint with no rejectable defects is obtained. All defects in each joint shall be repaired. Radiographs of the repaired area(s) shall conform to the radiographic standard as specified for the particular joint.

B3.9.3 Alternative Testing

An alternative testing method may be used for ballistic welds when agreed by the contractor and the procuring activity. When ultrasonic testing is used, Table B3-4 will be used for acceptance criteria. If magnetic particle or penetrant testing is used, acceptance criteria will be determined by agreement of the contractor and the Procuring Agency.

Table B3.3
Severity Level Requirements for Full-Penetration Welds (see B3.7.9)

Discontinuity Types	Weld Thickness, inches	Acceptance Level (Reference ASTM E-390 Radiographs)
Fine Scattered Porosity	Up to 3/8 in, incl.	2
	Up to 3/4 in, incl.	2
	Up to 2 in, incl.	3
Coarse Scattered Porosity	Up to 3/8 in, incl.	2
	Up to 3/4 in, incl.	2
	Up to 2 in, incl.	3
Linear Porosity or Globular Indications	Up to 3/8 in, incl.	2
	Up to 3/4 in, incl.	2
	Up to 2 in, incl.	3
Slag Inclusions	Up to 3/8 in, incl.	2
	Up to 3/4 in, incl.	2
	Up to 2 in, incl.	3
Tungsten Inclusions	Up to 3/8 in, incl.	2
	Up to 3/4 in, incl.	2
Incomplete Penetration	Up to 3/8 in, incl.	2
	Up to 3/4 in, incl.	2
	Up to 2 in, incl.	3
Lack of Fusion	Up to 3/8 in, incl.	2
	Up to 3/4 in, incl.	2
	Up to 2 in, incl.	3

Notes:

Gas holes or sand spots and inclusions allowed by this table shall be cause for rejection when closer than twice their maximum dimension to an edge or extremity of a weldment in a highly stressed or critical area, as determined by design engineering personnel.

B3.9.4 Inspection of Weldments Subjected to Straightening

All weldments subject to straightening shall be visually inspected subsequent to the straightening operation.

B3.9.5 Marking of Repairs to Weldments

All repairs to be made to weldments shall be indicated on the weldments by suitable markings, easily legible and of such nature that the marking shall not be obliterated in handling. The system of marking shall be subject to approval by the Government.

B3.9.6 Quality Control

It shall be the full responsibility of the contractor to maintain the quality control procedures and inspection standards necessary to assure that the part, the assembly, the sub-assembly or the end product meets the requirements of the drawings and the contract.

Table B3.4
Ultrasonic Acceptance-Rejection Criteria
(see B3.9.3)

Indication Rating, dB amplitude	Discontinuity Severity Class
+5 or Less	Class A (large discontinuity) Unconditionally rejectable regardless of length
+6 or +7	Class B (medium discontinuity)[2] Accept if length is ≤ 1 in. Reject if length is > 1 in.
+8 or greater	Class C (minor or small discontinuity Accept without limits on length or location

1. Class B discontinuities shall be separated by at least 2L, L being the length of the longer discontinuity except that when two or more such discontinuities are not separated by at least 2L, but the combined length of discontinuities and their separation distance is equal to or less than the maximum allowable length under the provisions of Class B shall be considered a single acceptable discontinuity.
2. Indications that remain on the CRT display as the search unit is moved away from the discontinuity may indicate planar flaws that require further evaluation through alternate ultrasonic testing methods, radiography, or by gouging followed by visual inspection.
3. Refer to AWS D1.1 as a guide for developing the testing procedure and calibration requirements. A written procedure which provides detailed parameters for testing and calibration shall be submitted and approved by the Customer prior to the initiation of any testing of product for acceptance
4. The following scanning levels shall be used:

Sound Path Distance (NOT material thickness), inches	Above Zero Reference, dB
2.5 and less	14
>2.5 to 5	19
>5 to 10	29
>10 to 15	39

APPENDIX C
Forms

This page intentionally blank

ARMOR WELDING DATA SHEET #1	Report Number Sheet Number of

WELDED ARMOR DATA	
Plate Number	SUBMITTED BY
DATE	
TYPE	ADDRESS
THICKNESS	
SPECIFICATION	CONTRACT NUMBER
ORDNANCE MATERIAL CONCERNED	
WELDED BY	
OBJECT	

On a dimension sketch of the Groove and Weldment, Indicate (1) the included angle; (2) the root opening; (3) the root face; (4) the bead sequence; (5) additional sketch of spacer strip or back-up, if any; (6) width of masking, if any on edges of cast plate; (7) average height of weld reinforcement.

Weld reinforcement (has) (has not) been removed.

WELDING DATA	
PLATE PREPARATION: Flame Cutting - Plasma Cutting - Flame Softening - Grinding - Machining	
POSITION OF WELDING: Flat - Horizontal - Vertical - Overhead	
WELDING: Robotic - Automatic - Semi-automatic - Hand	POLARITY: Straight - Reverse - AC - DC
PREHEAT (°F):	POSTHEAT (°F):
PEENING:	BUTTERING:

PASS	ELEC	TYPE	AMPS	VOLTS	CRACKING	CHIP OR	SPEED	INTERPASS TEMP. (°F)		
	SIZE	PASS				GRIND	IN/MIN.	A-B	C-D	E-F
1										
2										
3										
4										
5										
6										
7										
8										
9										
10										
11										
12										
13										
14										
15										
16										

S - STRINGER PASS W - WEAVING PASS

ARMOR WELDING DATA SHEET #2	Report Number Sheet Number of

ARMOR PLATE DATA
TEST PLATE NUMBER

	PLATE "A"	PLATE "B"
MANUFACTURER		
TYPE		
THICKNESS		
HEAT		
LOT		
PROCESS	O.H. ELEC ACID BASIC	O.H. ELEC ACID BASIC

CHEMICAL COMPOSITION

	C	Mn	Si	P	S	Cr	Ni	Mo	Zr	V	FACE	BACK
PLATE "A"												
PLATE "B"												

HEAT TREATMENT DATA
HEAT TREATED BY

ELECTRODE OR FILLER METAL DATA
TABLE 1

SIZE	MANUFACTURER	TRADE NAME	TYPE	CLASS

TABLE 2

MANUFACTURER TRADE NAME AND SIZE	CHEMICAL ANALYSIS	C	Mn	Si	S	P	Cr	Ni	Mo	Coating
	CORE WIRE									
	WELD METAL									
	CORE WIRE									
	WELD METAL									
	CORE WIRE									
	WELD METAL									
	CORE WIRE									
	WELD METAL									

TABLE 3 (AUTOMATIC WELDING)

MANUFACTURER	TRADE NAME	SIZE	FLUX

RADIOGRAPHED BY
RADIOGRAPH SERIAL NUMBER

REMARKS: The procedure used in fabricating the crossbar weld (is) (is not) the same as the procedure used in fabricating the leg welds.

FABRICATOR REPRESENTATIVE	RESIDENCE INSPECTOR OF ORDNANCE

ARMOR WELDING DATA SHEET #3				Report Number Sheet Number of
X-RAY SERIAL NUMBER WELD RADIOGRAPHIC REPORT				
PLATE SUBMITTED BY		PLATE NUMBER		SPECIFICATION
RADIOGRAPHED BY				DATE
PLATE THICKNESS	KV	MA	TIME	
FOCAL DISTANCE	TYPE OF FILM		SCREEN OR FILTERS	

SHOCK TEST PLATE

Show Locations of Radiographs and Results of Tests

CRACK

INCOMPLETE FUSION

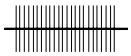
INCOMPLETE PENETRATION

POROSITY AND SLAG INCLUSIONS

UNDERCUTTING

RESULTS

NEGATIVES READ BY

NON-BALLISTIC PROCEDURE QUALIFICATION RECORD (PQR)-SHEET 1

MODIFIED ☐ **QUALIFIED BY TESTING** ☐

Identification # _____ Rev. ____ Date _____ By _____
Company Name _____ Performed By _____ Date _____
Welding Process(es) _____ Auth. by _____ Date _____
Type
Manual ☐ Semi-Automatic ☐
Machine ☐ Automatic ☐

JOINT DESIGN USED
Type:
Single ☐ Double Weld ☐

Backing: Yes ☐ No ☐
Backing Material: _____
Root Opening _____
Root Face Dimension _____
Groove Angle _____ Radius(J-U) _____
Backgouging Method Yes ☐ No ☐

POSITION
Position of Groove: Fillet:
Vertical Progression: UP ☐ DOWN ☐

Other _____

ELECTRICAL CHARACTERISTICS
Transfer Mode (GMAW only)
Short- Circuiting ☐ Globular ☐
Spray ☐ Pulsed ☐
Current: AC ☐ DCEP ☐
DCEN ☐
Other _____
Tungsten Electrode (GTAW)
Size _____
Type _____

BASE METALS _____
Material Spec. _____
Type or Grade _____
Thickness: Groove _____ Fillet _____
Diameter (Pipe) _____

FILLER METALS
AWS Specification _____
AWS Classification _____
F-Number _____

SHIELDING
1.Gas _____ Composition _____
Flow Rate _____
2.Gas Composition _____
Flow Rate _____
Flux Name _____
Electrode-Flux (Class): _____

TECHNIQUE
Stringer or Weave Bead: _____
Multi-pass or Single Pass (per side) _____
Number of Electrodes _____
Electrode Spacing Longitudinal _____
Lateral _____
Angle _____
Contact Tube to Work Distance _____
Peening _____
Interpass Cleaning: _____

PREHEAT
Preheat Temp., Min. _____
Interpass Temp., Min. _____ Max. _____

POSTWELD HEAT TREATMENT
Temp. _____
Time _____

WELDING PROCEDURE

Pass or Weld Layer	Process	Filler Metals		Current		Volts	Travel Speed	Joint Detail
		Class	Dia. (in.)	Type & Polarity	Amps or Wire Feed Speed			

NON-BALLISTIC PROCEDURE QUALIFICATION RECORD (PQR)-SHEET 2

Procedure Qualification Record (PQR) # _____Test Results

Tensile Test

Specimen	Width	Thickness	Area	Unlimited tensile Load lb.	Ultimate Unit stress, psi	Character of failure and location

GUIDED BEND TEST

Specimen No.	Type of bend	Result	Remarks

VISUAL

Appearance _____
Undercut _____
Piping porosity _____
Convexity _____
Test date _____

RADIOGRAPHIC-ULTRASONIC EXAMINATION

RT report no.: _____ Result _____
UT report no.: _____ Result _____

FILLET WELD TEST RESULTS

Minimum size multiple pass Maximum size single pass

Macroetch
1. _____ 3. _____
2. _____

Macroetch
1. _____ 3. _____
2. _____

ALL-WELD-METAL TENSION TEST

Tensile Strength _____
Yield Strength _____
Elongation in 2 in. % _____
Laboratory tests no. _____

Welders name _____ Clock No. _____ Stamp No. _____
Test Conducted By _____ Laboratory

Test number _____
Per _____

We, the undersigned, certify that the statements in this record are correct and that the test welds were prepared, welded, and tested in accordance with the requirements of Section 4 of Drawing 12479550, Ground Combat Vehicle Welding Code-Steel. Modified PQR's are performed in accordance with Mil-Std-1261 and/or 1941.

Signed by _____
Tester

Title _____
Date _____

CWI Stamp

Signed By _____
Manufacturer or Contractor

Title _____
Date _____

WELDING PROCEDURE SPECIFICATION — SHEET 1

WPS No. **Qualified** ☐ **Modified** ☐ **Prequalified** ☐

Ballistic ☐ Revision _____ Date _____ Approved _____
Company Representative

Non-Ballistic ☐ Revision _____ Date _____
Revision _____ Date _____

Supporting PQR(s) _____ _____ _____ _____

Firing Record No. _____ _____ _____ _____

QUALIFIED BASE MATERIALS

M Number ____ ____ to ____ Grp ____
Material Spec. _____ to _____
Table3.1 Grp _____ to _____
Combinations _____ to _____
_____ to _____
_____ to _____

FILLER METALS

F- Number _____
AWS Specification _____
AWS Classification _____
Filler Metal Dia. _____
Electrode Type/No. _____
Electrode Dia./Spacing _____

BALLISTIC BASE METAL THICKNESS (t)

Groove _____ to _____
Fillet _____ to _____
Welding Position _____
Vertical Welding Progression _____

NON-BALLISTIC BASE METAL THICKNESS (t)

Groove _____ to _____
Fillet _____ to _____
Welding Position _____
Vertical Welding Progression _____

SHIELDING GAS OR FLUX

Shielding Gas(es)/Flux _____
Percent Composition _____

PLATE PREPARATION AND CLEANING

Edge Prep _____
Cleaning Method(s) _____

MINIMUM PREHEAT TEMP (°F)*					**INTERPASS TEMP(°F) MAX**
Thickest Joined Member					All Thickness

*** Unless otherwise specified in the table, if base metal is below 32 °F, preheat to 70 °F is required**

ELECTRICAL PARAMETER RANGES FOR WELDING POSITIONS QUALIFIED AND MATERIAL THICKNESS

	Non Ballistic					Ballistic
Material Thickness						
Welding Position(s)						
Welding Process						
Amperage Range						
Root Opening						
Groove Type						
Welding Power Source						
Welding Current (AC/DC)						
Electrode Polarity (Pos, Neg)						
Weld Passes (Single, Multi.)						

Note: The parameters listed above should be used as a guideline for welding same thickness materials, when welding dissimilar thickness', the welding parameters shall be maintained within the bolded range listed above.

WELDING PROCEDURE SPECIFICATION — SHEET 2

WPS No.

Post Weld Heat Treatment

Temperature _____ Time Range _____

Groove Welds (Non-Ballistic)	Joint Criteria*

Non Groove Welds(Non-Ballistic)	Joint Criteria*

Groove Welds (Ballistic)	Joint Criteria*

***Drawing joint requirements supersede any listed dimensional requirements**

STUD WELDING PQR No.: Date: _____

Machine Settings

Power Supply Make: _____
Model No.: _____
Stud Gun Model: _____
Power Supply SN: _____
Current/Polarity _____
Welding Position: _____
Plunge _____
Gun Lift _____
Cable Size _____
Cable Length _____
Cleaning _____

Stud Material

M-Number: _____ Type: _____
Specification: _____
Other: _____

Base Material

M-Number: _____
Material Specification: _____
Alloy and Temper _____
Material Thickness _____

Ferrules

Ferrule Material: _____
Ferrule PN: _____
Ferrule Description: _____

PQR TEST CONFIGURATION

Test ID Results	Amperage Range	Weld Time(sec.)	Ult. Tension Test(lbs.)	Tension Test Results	Bend Test (greater than 15 deg.)

We certify that the statements in this record are correct and that the test welds were prepared, welded and tested in accordance with the requirements of Drawing 12479550, Ground Combat Vehicle Welding Code-Steel

Welded By: _____

Signed by: _____
Tester

Title: _____
Date:

Signed by: _____
Company Representative

Title: _____
Date:

STUD WELDING WPS

WPS Number _____ Date _____ Approved _____
Company Representative

Process: **Stud Welding** Revision ____ Date _____ Approved _____

Position _____ _____ _____

Supporting PQR Numbers _____ _____ _____ _____

Joint Detail	Joint Detail

Base Metals

M-No.: _____
Specification _____
Thickness Range _____
Alloy and Temper _____

Stud Materials

M-No.: _____
Specification _____
Alloy and Temper _____
Stud Diameter _____

Cleaning

Initial Cleaning _____
Final Cleaning _____

Ferrules

Ferrule Material _____
Ferrule PN _____
Ferrule Description _____

Machine Information and Settings

Power Supply Make _____
Stud Gun Model _____
Current/Polarity _____
Amperage Range Setting _____
Stud-to-Work Distance _____
Lift Setting _____

Model number _____
Timer Range Setting (sec.) _____
Cable Size
Cable Length _____
Other _____

WELDER, WELDING OPERATOR OR TACK WELDER QUALIFICATION TEST RECORD

Type of Welder_____

Name _____Identification No._____

Welding Procedure Specification No._____ Rev._____Date _____

Variables	Record Actual Values Used In Qualification	Qualification Range
Process/Type [4.18.1.1, Item (1)]		
Electrode (single or multiple)		
Current/Polarity		
Position [4.18.1.1, Item (7)]		
Weld Progression [4.18.1.1, Item (8)]		
Backing (YES or NO) [4.18.1.1, Item (2)]		
Material Spec. [4.18.1.1, Item (5)]	to	
Base Metal		
Thickness (Plate)		
Groove		
Fillet		
Thickness (Pipe/tube)		
Groove		
Fillet		
Diameter (Pipe)		
Groove		
Fillet		
Filler Metal [4.18.1.1, Item (3, 4)]		
Spec. No.		
Class		
F-No.		
Gas/Flux Type [4.18.1.1, Item (6)]		
Other		

VISUAL INSPECTION

Acceptable YES or NO _____

Guided Bend Test Results

Type	Result	Type	Result

FILLET TEST RESULTS

Appearance _____ Fillet Size _____

Fracture Test Root Penetration _____ Macroetch _____

(Describe the location, nature, and size of any crack or tearing of the specimen.)

Inspected by _____ Test Number _____

Organization _____ Date _____

RADIOGRAPHIC TEST RESULTS

Film Identification Number	Results	Remarks	Film Identification Number	Results	Remarks

Interpreted by _____ Test Number _____

Organization _____ Date

We, the undersigned, certify that the statements in this record are correct and that the test welds were prepared, welded, and tested in accordance with the requirements of section 4 of Drawing 12479550, Ground Combat Vehicle Welding Code—Steel.

Manufacturer or Contractor _____ Authorized By _____

Date _____

APPENDIX D

Illustrations — Stud Weld Positions, Weld Test Specimens and Test Fixtures

This page intentionally blank

Appendix D
Illustrations — Stud Weld Positions, Weld Test Specimens and Test Fixtures

D1 Standard Stud Test Weldment Positions

Figure D1.1 illustrates and identifies the positions for Standard Stud Test Weldments. Standard Stud Test Weldments shall be positioned in the applicable position illustrated within the limitations shown in Figure D1.1.

D2 Guided Bend Specimens

D2.1 Preparation of Groove weld Specimens

Guided bend test specimens shall be prepared by cutting the test plate or pipe to form specimens as illustrated in Figures D2.1, D2.2, and D2.3. The cut surfaces of Figures D2.1 and D2.2 are designated the specimen sides. The other two surfaces of Figures D2.1 and D2.2 are designated the face and root surfaces. A side bend specimen is illustrated in Figure D2.3.

D2.2 Weld reinforcement and backing of face- and root-bend specimens shall be removed flush with the specimen surface. Cut surfaces shall be parallel, may be thermally cut, and shall be machined or ground a minimum of 1/8 in. in thermally cut edges, except that M-1 metals may be bent “as-cut” if no objectionable surface roughness exists.

D2.3 Subsize Transverse Face and Root Bends

For pipe of 4 in. outside diameter or less, the bend specimen width may be 3/4 in., measured around the outside surface. Alternatively, for outside diameters less the 2-7/8 in., the width may be that obtained by cutting the pipe into quarter sections.

D2.4 Nonstandard Bend Specimens

For base metal thickness less than 3/8 inch, the thickness of the specimen shall be the thickness of the base metal.

D3 Tension Specimens

Tension test specimens are illustrated in Figure D3.1, D3.2, D3.3, and D3.4.

D3.1 A single specimen may be used for thicknesses of 1 in. or less.

D3.2 For thicknesses over 1 in., single or multiple specimens may be used provided that:

- (1) Collectively, multiple specimens, representing the full thickness of the weld at one location, shall comprise a set.
- (2) The entire thickness shall be mechanically cut into approximately equal strips. For specimens that are not turned, specimen thicknesses shall be the maximum size that can be tested in available equipment.

D4 Cladding and Hardfacing Specimens

Bend test and chemical analysis specimens shall be prepared as shown in Figures D4.1 and D4.2.

D5 Test Fixtures

Bend and stud test fixtures are shown in Figures D5.1 through D5.6

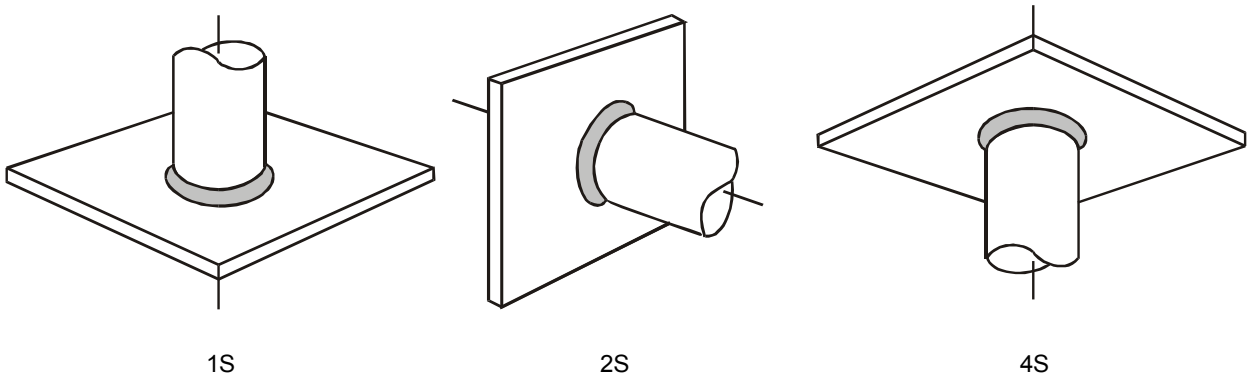

STUD WELDING POSITIONS

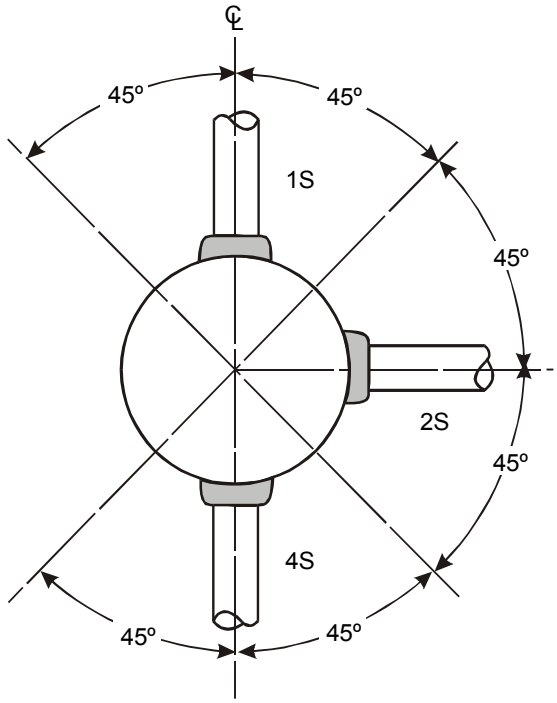

LIMITS OF POSITIONS FOR PLATE OR PIPE
STUD WELDING POSITIONS

Figure D1.1 — Welding Positions — Stud Welds
(see D1.1)

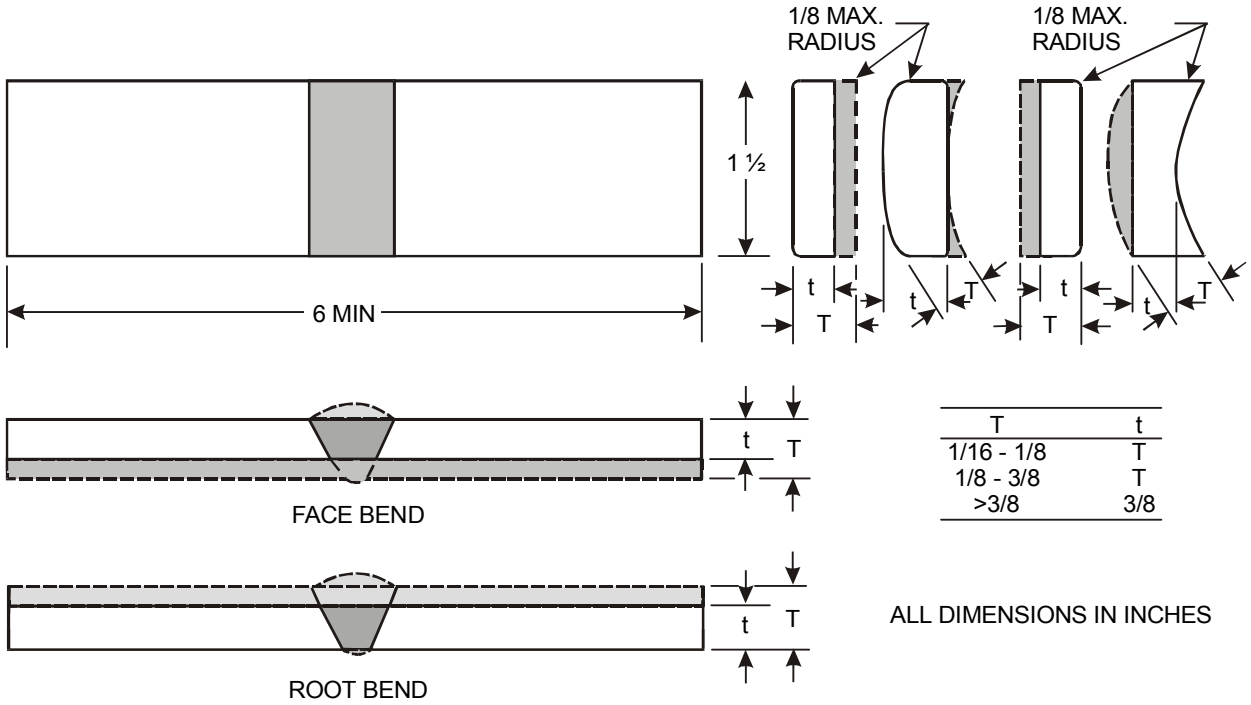

	Specimen Thickness (TS)	
Thickness of Base Materials	M23 & M35 All F-23 Welds	All Other Materials
1/16 to 1/8	T	T
1/8 to 3/8	1/8	T
Over 3/8	1/8	3/8

Notes:

1. Weld reinforcement and backing strip or backing ring, if any, shall be removed flush with the surface of the specimen.
2. If thermal cut, the edges shall be dressed by grinding, except in M-1 materials.
3. For pipe diameters of 2 through 4 in. NPS, the width of the bend specimen may be 3/4 in. For pipe diameters of 3/8 to 2 in. NPS, the bend specimen width may be 3/8 in., with an alternative (permitted for pipe 1 NPS in. and less) of cutting the pipe into quarter sections, in which case the weld reinforcement may be removed and no other preparation of the specimens is reguired.

Figure D2.1 — Transverse Face and Root Bend Specimens
(see D2.1)

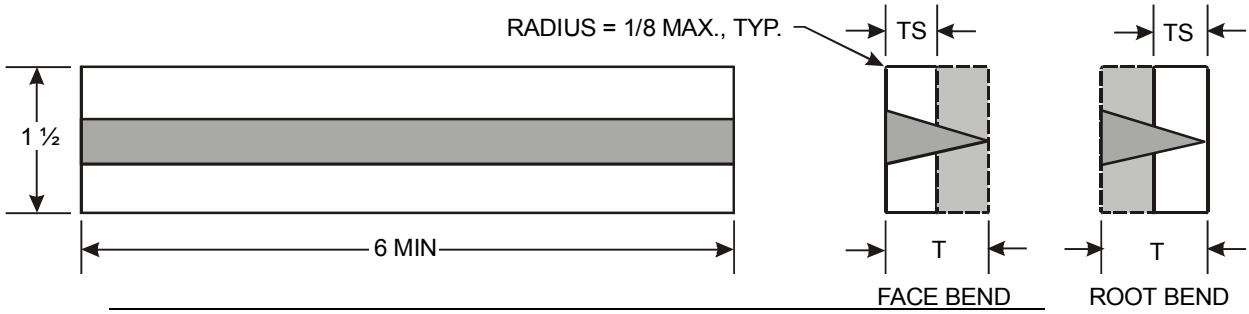

Thickness of Base Materials	Specimen Thickness (TS) M-23 & M-35 All F-23 Welds	All Other Materials
1/16 to 1/8	T	T
1/8 to 3/8	1/8	T
Over 3/8	1/8	3/8

Figure D2.2 — Longitudinal Face and Root Bend Specimens
(see D2.1)

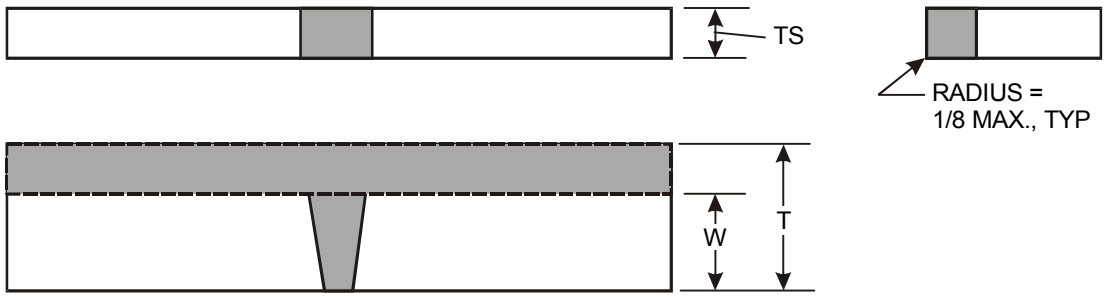

Weld Thickness	Specimen Thickness (TS) M-23 & M-35 and any F-23 Welds	All Other M Numbers	Width of Specimen (W)
3/8 to 1-1/2	1/8	3/8	T
Over 1-1/2	1/8	3/8	See Note 3

Notes

1. Weld reinforcement and backing strip or backing ring, if any, shall be removed flush with the surface of the specimen. If a recessed ring is used, this surface of the specimen may be machined to a depth not exceeding the depth of the recess to remove the ring, except that in such cases the thickness of the finished specimen shall be that specified above.
2. If thermal cut, the edges shall be dress by grinding, except for M-1 materials.
3. When a side bend specimen thickness “T” exceeds 1-1/2 in., it may be bent at full width, or it may be cut into multiple test specimens of approximately equal dimensions provided the specimens are not less than 3/4 in.wide.

Figure D2.3 — Transverse Side Bend Specimens
(see D2.1)

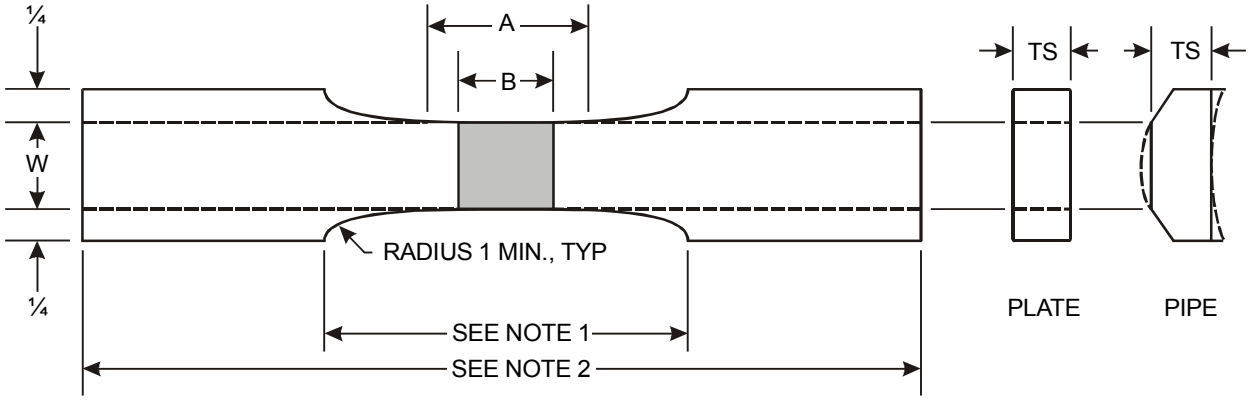

Test Weldment			
		Pipe	
		Outside Diameter	
Dimensions	Plate	<3	>3
B		(See Note 3)	
A		(See Note 4)	
W	3/4	1/2	3/4
TS	TS[5&6]	(See Note 5)	

Notes:

1. This section shall be cut by machining or grinding.
2. The specimen length shall be as required by the tension testing equipment.
3. B shall be equal to the greater dimension of the weld metal In the direction of the specimen longitudinal axis.
4. The length of the reduced section A shall be equal to B, plus 1/2 in.; with a minimum of 2-1/4 in. The ends shall not differ in width from the ends to the center, but the width at either end shall not be more than 0.015 in. greater than the width at the center. The weld shall be in the center of the reduced section.
5. The amount removed shall be the minimum needed to obtain plane parallel surfaces across the width of the reduced section.
6. For base metal thicknesses greater than 1 in., multiple tension specimens may be substituted for the single tension specimen from each blank. If multiple specimens are used, one complete set shall be made for each required test. The specimen blank shall be cut into strips of approximately equal thickness.

Figure D3.1 — Reduced Section Tension Specimen — Rectangular (see D3)

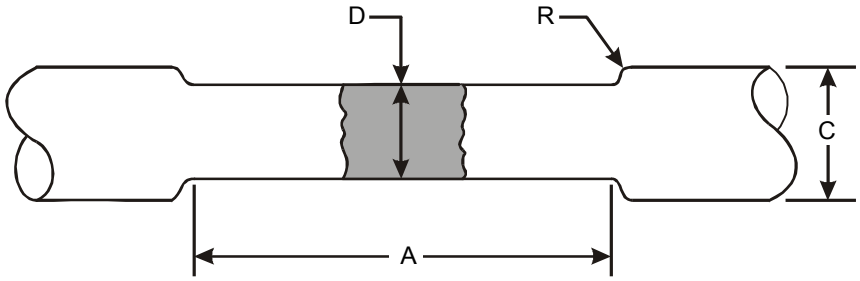

	Standard Specimen Dimensions, in.[1,3]			
Dimensions	0.505	0.353	0.252	0.188
A = Length of Reduced Section[2,4]	← (See Note 4) →			
D = Diameter	0.500 ± 0.010	0.350 ± 0.007	0.250 ± 0.005	0.188 ± 0.003
R = Radius, inches minimum	3/8 min.	1/4 min	3/16 min	1/8 min
C = Diameter	3/4	1/2	3/8	1/4

Notes:

1. The standard specimen selected shall be based upon the maximum diameter specimen that can be cut from the specimen blank.
2. The weld shall be in the center of the reduced section.
3. Where only a single specimen from a blank is required, the specimen longitudinal axis shall be midway between the base metal surfaces.
4. The length of the reduced section shall be not less than the width of the weld metal plus 2D. It may have a gradual taper from the ends toward the center, with the ends not more than I percent greater in diameter than the center, which shall be the dimension D. The ends may be of any length and shape as required by the testing machine.
5. For base metal thickness over 1 in., multiple specimens are required and one complete set shall be made for each required test. The specimen blank shall be cut into strips of approximately equal thickness with their center lines no more than 1 in. apart. The centerline of the surface shall be within 5/8 in. of that surface.

Figure D3.2 — Reduced Section Tension Specimen — Round (see D3)

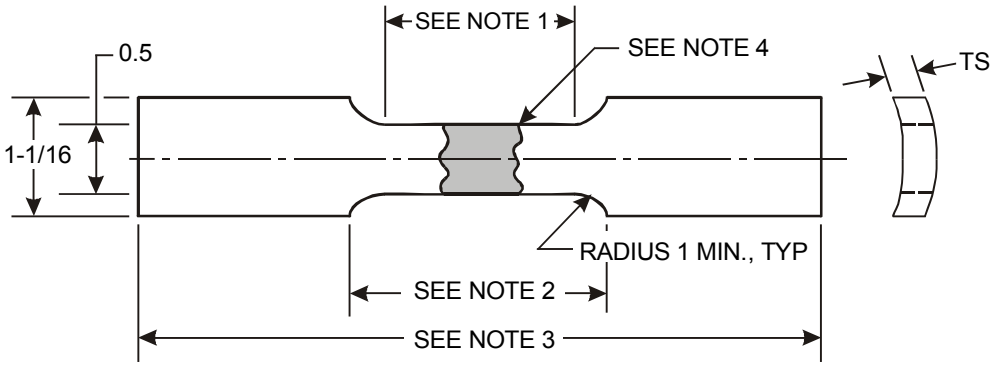

Notes:

1. The length of the reduced section shall be equal to the greater dimension of the weld metal in the direction of the specimen longitudinal axis, plus 2T. The sides shall be approximately parallel. The weld shall be in the center of the reduced section.
2 The reduced section shall be cut by machining or grinding.
3. The specimen length shall be as required by the tension testing equipment.
4. The weld reinforcement shall be removed such that the weld metal thickness equals that of the base metal thickness.

Figure D3.3 — Alternate Tension Specimen for Pipe 3 in. O.D. or Less (see D3)

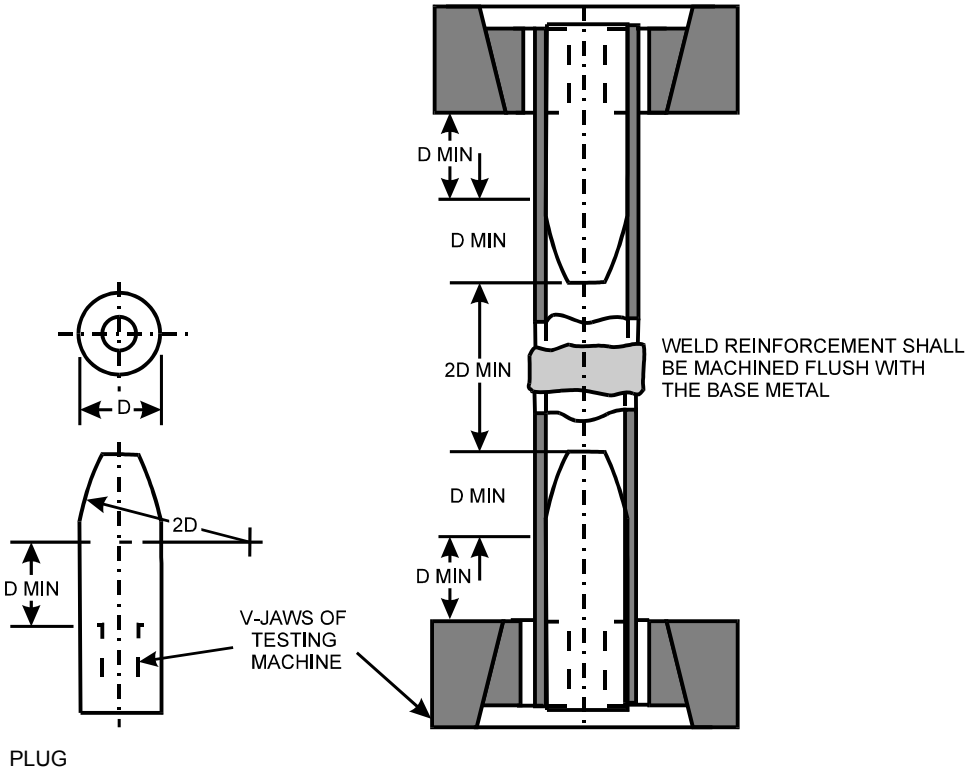

Notes:

1. The length of the reduced section shall be equal to the greater dimension of the weld metal in the direction of the specimen longitudinal axis, plus 2 times the thickness of the test weldment. The sides shall be approximately parallel. The weld shall be in the center of the reduced section.
2. This section shall be cut by machining or grinding.
3. The specimen length shall be as required by the tension testing equipment.
4. The weld reinforcement shall be removed such that the weld metal thickness equals that of the base metal thickness.

Figure D3.4 — Alternate Tension Specimen for Pipe 2 in. O.D. or Less (see D3)

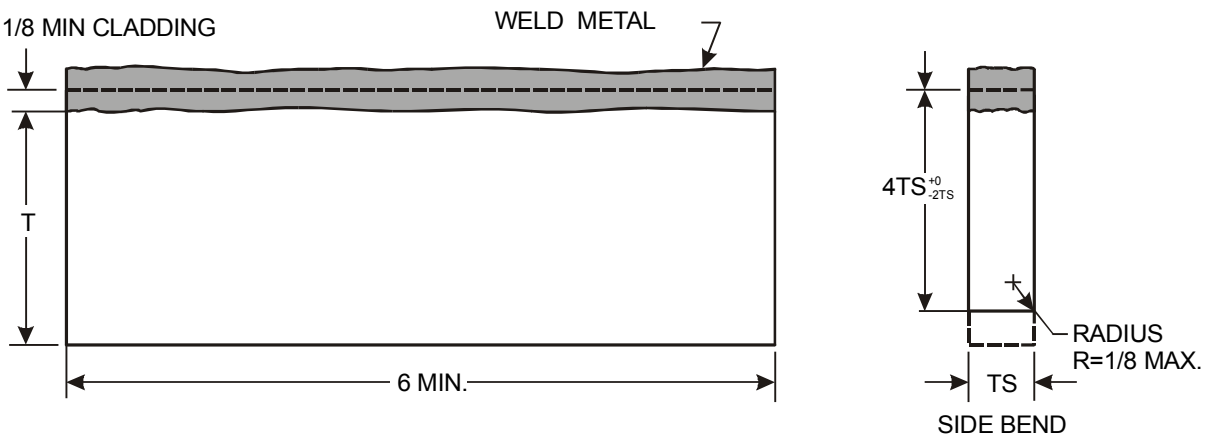

T	TS
1/8 - 3/8	T
>3/8	3/8

Notes:
1. T = the thickness of the base metal.
2. TS = the thickness of the test specimen.

Figure D4.1 — Weld Cladding Side Bend Specimen
(see D4)

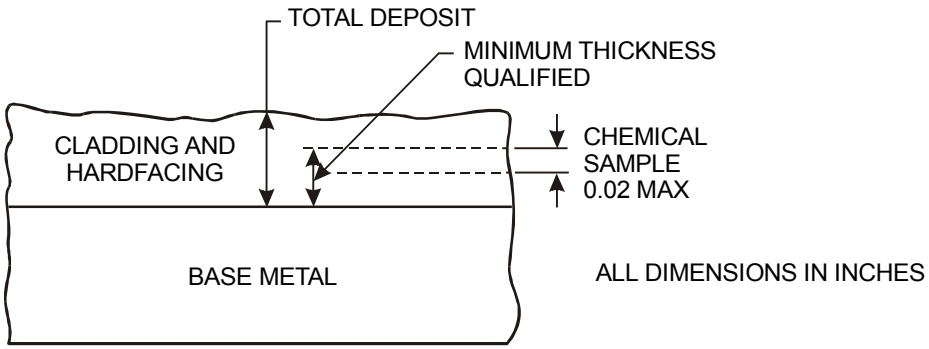

Figure D4.2 — Weld Cladding and Hardfacing Chemical Analysis Specimen
(see D4)

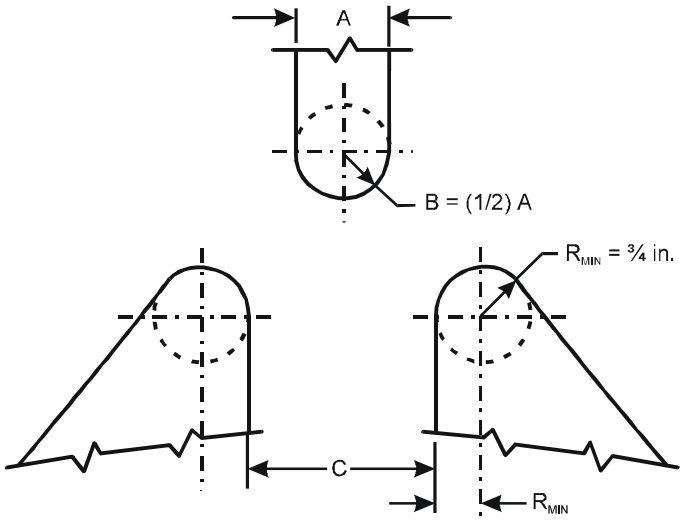

Base Metal	TS*, in	A, in.	C, in.
M11	3/8 <3/8	2 -1/2 (6-2/3)TS	3-3/8 (8-2/3)TS
All others	3/8 <3/8	1-1/2 4TS	2-3/8 6TS + 1/8

*TS = specimen thickness

Notes:

1. The dimensions of the bend fixture, except as otherwise required in the above table, shall result in a calculated outer fiber elongation for the specimen equal to the least ductile metal being joined as calculated using the formula:

   Percent Outer Fiber Elongation = 100 TS/(A + TS)

   Where the metal being tested is not covered by the table above, the specimen thickness (TS) shall be calculated. In no case shall the fixture dimensions exceed the following: (32-7/8) x TS for A, (16-7/16) x TS for B, or (34-7/8) x TS + 1/16 for C, where TS is the minimum allowable specimen thickness calculated using the formula:

   TS minimum allowable = (A x % Elongation)/(100 - % Elongation) where % elongation Is the tensile elongation of the least ductile metal being tested.
2. The shoulders of the test figure shall either be hardened rollers free to rotate or hardened and greased fixed shoulder.

Figure D5.1 — Guided Bend Fixture — Bottom Ejecting Type
(see D5)

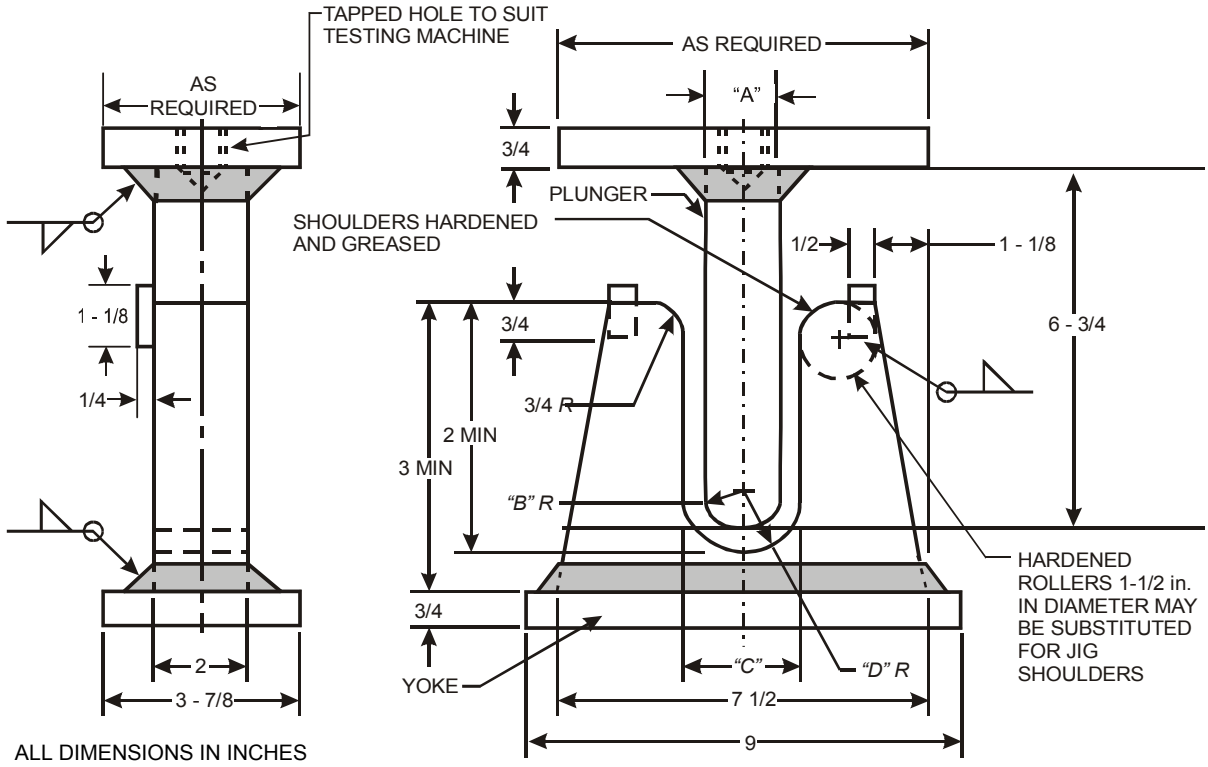

Base Metal	TS*, in.	A, in.	C, in.
M-11	3/8	2-1/2	3-3/8
	<3/8	(6-2/3)TS	(8-2/3)TS + 1/8
All others	3/8	1-1/2	2-3/8
	<3/8	4TS	6TS + 1/8

*TS = Specimen thickness

Notes:

1. The dimensions of the bend fixture, except as otherwise required In the above table, shall result in a calculated outer fiber elongation for the specimen equal to the least ductile metal being joined as calculated using the formula:

   Percent Outer Fiber Elongation = 100 TS/(A + TS)

   Where the metal being tested is not covered by the table above, the specimen thickness (TS) shall be calculated. In no case shall the fixture dimensions exceed the following: (32-7/8) x TS for A, (16-7/16) x TS for B, or (34-7/8) x TS + 1/16 for C, where TS is the minimum allowable specimen thickness calculated using the formula:

   TS minimum allowable = (A x % Elongation)/(100 - % Elongation) where % elongation is the tensile elongation of the least ductile metal being tested.
2. The shoulders of the test figure shall either be hardened rollers free to rotate or hardened and greased fixed shoulder.
3. The specimen shall be bent until a 1/8 - inch diameter wire cannot be inserted at any point between the specimen and the die.

Figure D5.2 — Guided Bend Fixture — Bottom Type
(see D5)

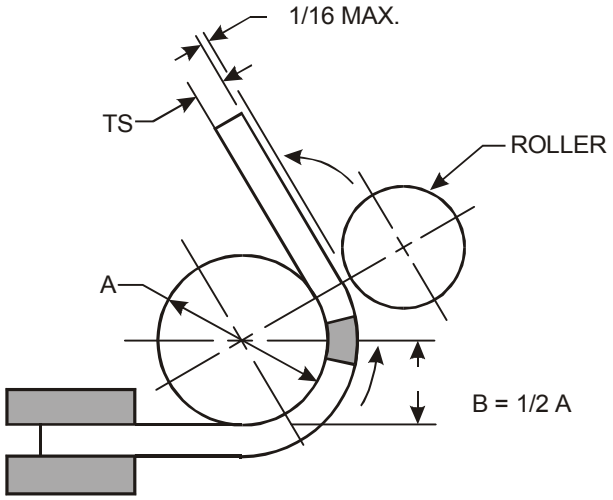

Base Metal	TS*, in	A, in
M-11	3/8	2-1/2
	<3/8	(6-2/3)TS
All others	3/8	1-1/2
	<3/8	4TS

*TS = Specimen Thickness

Notes:

1. The dimensions of the bend fixture, except as otherwise required In the above table, shall result in a calculated outer fiber elongation for the specimen equal to the least ductile metal being joined as calculated using the formula:

   Percent Outer Fiber Elongation = 100 TS/(A + TS)

   Where the metal being tested is not covered by the table above, the specimen thickness (TS) shall be calculated. In no case shall the fixture dimensions exceed the following: (32-7/8) x TS for A, (16-7/16) x TS for B, or (34-7/8) x TS + 1/16 for C, where TS is the minimum allowable specimen thickness calculated using the formula:

   TS minimum allowable = (A x % Elongation)/(1 00 - % Elongation) where % elongation is the tensile elongation of the least ductile metal being tested.
2. Dimensions not shown are the option of the machine designer. The essential consideration is to have adequate rigidity so that the parts will not spring.
3. The specimen shall be firmly clamped on one end so that there is no sliding of the specimen during the bending operation.
4. Test specimen shall be removed from the jig when the outer roll has been moved 180 degrees from the starting point.
5. When qualifying armor material Mil-A-11356 or Mil-A-12560, (for non-ballistic application only) use mandrel with 2.5 inch diameter.

Figure D5.3 — Guided Bend Fixture — Wrap Around
(see D5)

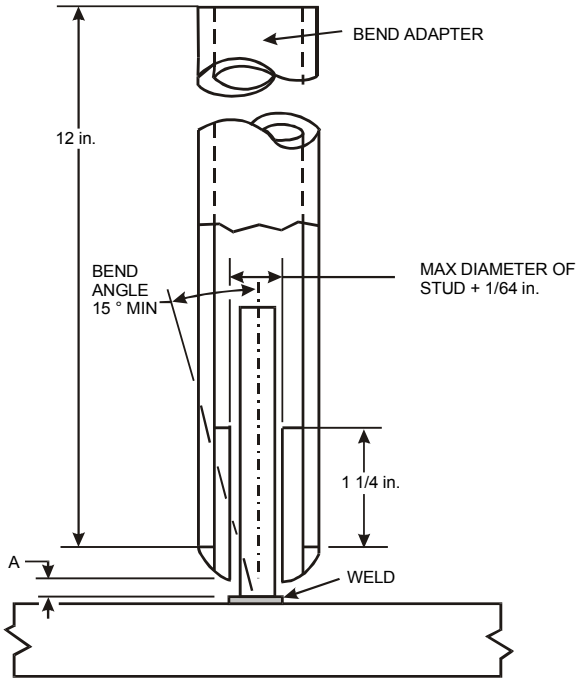

FOR STUD DIAMETER (in.)	1/8	3/16	1/4	3/8	1/2	5/8	3/4	7/8	1
USE ADAPTER GAP “A” (in.)	1/8	1/8	3/16	7/32	5/16	11/32	15/32	15/32	19/32

Figure D5.4 — Stud Weld Test Fixture
(see D5)

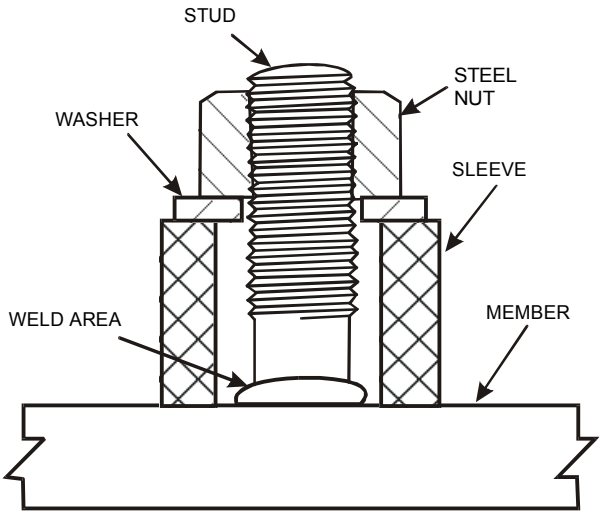

Note: Dimensions are appropriate to the size of the stud. Threads of the stud shall be clean and free of lubricant other than residual cutting oil.

Figure D5.5 — Stud Weld Torque Fixture
(see D5)

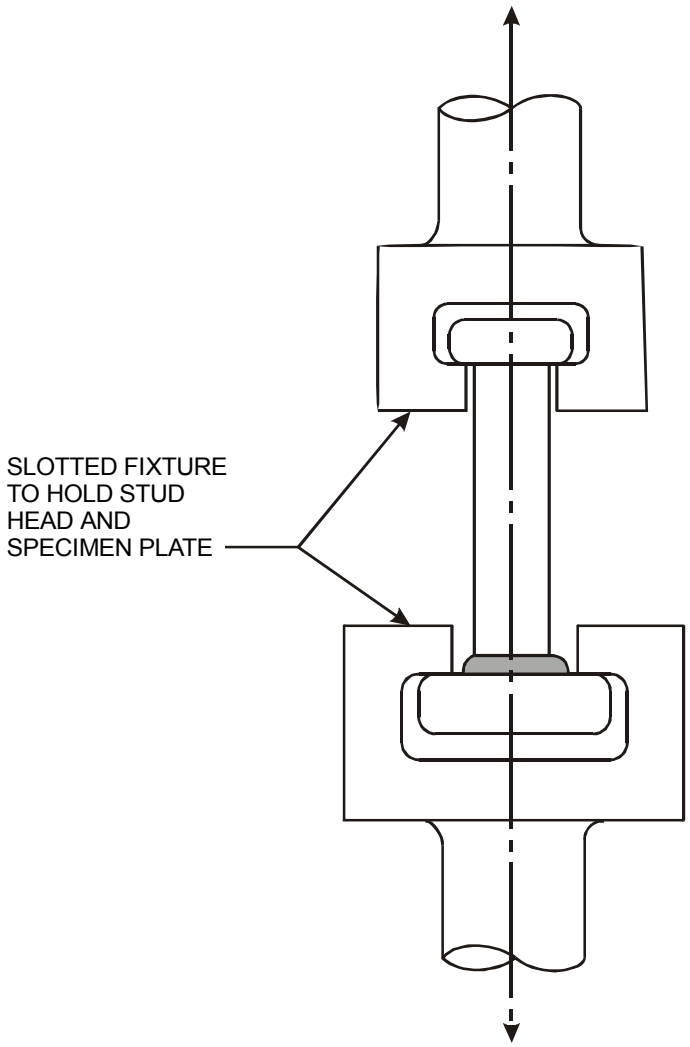

Figure D5.6 — Stud Weld Tension Test Fixture
(see D5)

This page intentionally blank

APPENDIX E
Prequalified Joint Preparations and Joint Details

This page intentionally blank

Notes for Figures E.1 and E.2

Notes:

- A. Not prequalified for gas metal arc welding using short circuiting transfer nor GTAW.
- B: Joint is welded from one side only.
- Br Cyclic load application limits these joints to the horizontal welding position.
- C: Backgouge, root to sound metal before welding second side.
- D: SMAW detailed joints may be used for prequalified GMAW (except GMAW-S) and FCAW.
- E: Minimum weld size, E and S as specified on drawings.
- J: If fillet welds are used in statically loaded structures to reinforce groove welds in comer and T-joints, these shall be equal to 1/4 T_1, but need not exceed 3/8 in. Groove welds in corner and T-joints of cyclically loaded structures shall be reinforced with fillet welds equal to 1/4 T_1, but not more than 3/8 in.
- M Double-groove welds may have grooves of unequal depth, but the depth of the shallower groove shall be no less than one-fourth of the thickness of the thinner part joined.
- Mp: Double-groove welds may have grooves of unequal depth, provided these conform to the limitations of Note E. Also the weld size (E) applies individually to each groove.
- N: The orientation of the two members In the joints may vary from 135° to 180° for butt joints, or 45° to 135° for comer joints, or 45° to 90° for T-joints.
- V: For corner joints, the outside groove preparation may be In either or both members, provided the basic groove configuration is not changed and adequate edge distance Is maintained to support the welding operations without excessive edge melting.
- Z: Weld size (E) Is based on joints welded flush.

Legend for Figures E.1 and E.2

Symbols for joint types
B - butt joint
C - corner joint
T - T-joint
BC - butt or corner joint
TC - T- or corner joint
BTC - butt, T-, or corner joint

Symbols for base metal thickness and penetration
L - limited thickness-complete joint penetration
U - unlimited thickness-complete joint penetration
P - partial joint penetration

Symbol for weld types
1 - square-groove
2 - single-V-groove
3 - double-V-groove
4 - single-bevel-groove
5 - double-bevel-groove
6 - single-U-groove
7 - double-U-groove
8 - single-J-groove
9 - double-J-groove
10 - flare-bevel-groove

Symbols for welding processes if not shielded metal arc
S - submerged arc welding
G - gas metal arc welding
F - flux cored arc welding

Welding processes
SMAW - shielded metal arc welding
GMAW - gas metal arc welding
FCAW - flux cored metal arc welding
SAW - submerged arc welding

Welding positions
F - flat
H - horizontal
V - vertical
OH - overhead

Dimensions
R = Root Opening
a, b = Groove Angles
f = Root Face
r = J- or U-groove Radius
S, S 1, S 2 = PJP Grove Weld
Depth of Groove
E, E 1, E 2 = PJP Groove Weld
Sizes corresponding to S, S 1, S 2, respectively

Joint Designation

The lower case letters, e.g., a, b, c, etc., are used to differentiate between joints that would otherwise have the same joint designation.

See Notes on Page 149

Square-groove weld (1)
Butt joint (B)

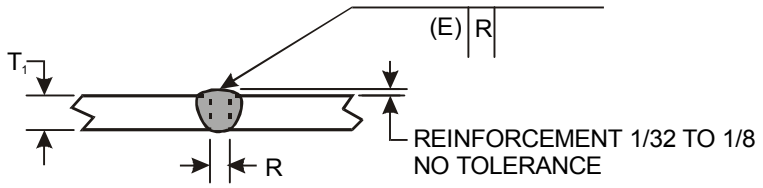

Welding Process	Joint Designation	Base Metal Thickness (U = Unlimited)		Groove Preparation			Permitted Welding Positions	Weld Size (E)	Notes
				Root Opening	Tolerances				
		T_1	T_2		As Detailed	As Fit-Up			
SMAW	B-P1a	1/8 max	—	R=0 to 1/16	+1/16, -0	± 1/16	All	$T_1 - 1/32$	B
	B-P1c	1/4 max	—	$R = \frac{T_1}{2}$ min	+1/16, -0	± 1/16	All	$\frac{3T_1}{4}$	B,D

Square-groove weld (1)
Butt joint (B)

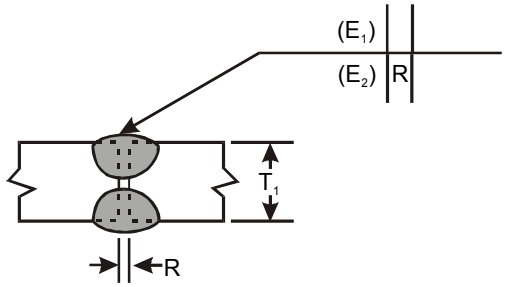

E1 + E2 MUST NOT EXCEED $\frac{3T_1}{4}$

Welding Process	Joint Designation	Base Metal Thickness (U = Unlimited)		Groove Preparation			Permitted Welding Positions	Weld Size (E)	Notes
				Root Opening	Tolerances				
		T_1	T_2		As Detailed	As Fit-Up			
SMAW	B-P1b	1/4 max	—	$R = \frac{T_1}{2}$	+1/16, -0	± 1/16	All	$\frac{3T_1}{4}$	D

Figure E.1 (Sheet 1) — Prequalified Partial Joint Preparation (PJP)
Groove Welded Joint Details (see 3.8)
Top — Single square-groove weld, butt joint
Bottom — Double square-groove weld, butt joint

See Notes on Page 149

Single-V-groove weld (2)
Butt joint (B)
Corner joint (C)

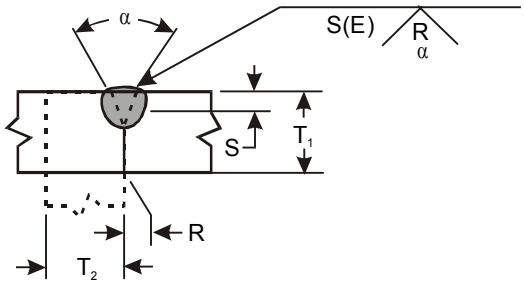

Welding Process	Joint Designation	Base Metal Thickness (U = Unlimited)		Groove Preparation			Permitted Welding Positions	Weld Size (E)	Notes
				Root Opening Root Face Groove Angle	Tolerances				
		T_1	T_2		As Detailed)	As Fit-Up			
SMAW	BC-P2	1/4min	U	R = 0 f = 1/32 min α = 60°	0 +1/16 +U, -0 +10°, -0°	+1/8 -1/16 ± 1/16 +10°, -5°	All	S	B, D, E, N
GMAW FCAW	BC-P2-GF	1/4 min	U	R = 0 f = 1/8 min α = 60°	0 +1/16 +U, -0 +10°, -0°	+1/8 -1/16 ± 1/16 +10°, -5°	All	S	A, B, E, N
SAW	BC-P2-S	7/16 min	U	R = 0 f = 1/4 min α = 60°	± 0 +U, -0 +10°, -0°	+1/16 –0 ± 1/16 +10°, -5°	F	S	B,E,N

Double-V-groove weld (3)
Butt joint (B)

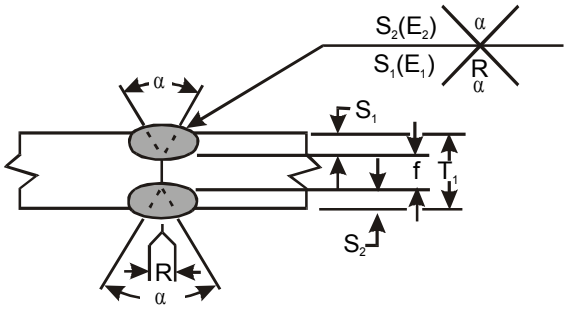

Welding Process	Joint Designation	Base Metal Thickness (U = Unlimited)		Groove Preparation			Permitted Welding Positions	Total Weld Size ($E_1 + E_2$)	Notes
				Root Opening Root Face Groove Angle	Tolerances				
		T_1	T_2		As Detailed	As Fit-Up			
SMAW	B-P3	1/2 min	—	R = 0 f = 1/8 min α = 60°	+1/16 -0 +U, -0 +10°, -0°	+1/8 -1/16 ± 1/16 +10°, -5°	All	$S_1 + S_2$	D, E, Mp, N
GMAW FCAW	B-P3-GF	1/2 min	—	R = 0 f = 1/8 min α = 60°	+1/16 -0 +U, -0 +10°, -0°	+1/8 –1/16 ± 1/16 +10°, -5°	All	$S_1 + S_2$	A, E, Mp, N
SAW	B-P3-S	3/4min	—	R = 0 f = 1/4 min α = 60°	± 0 +U, -0 +10°, -0°	+1/16 -0 ± 1/16 +10°, -5°	F	$S_1 + S_2$	E, Mp, N

Figure E.1 (Sheet 2) — Prequalified Partial Joint Preparation (PJP) Groove Welded Joint Details (see 3.8)
Top — Single V-groove weld, butt or corner joint
Bottom — Double V-groove weld, butt joint

See Notes on Page 149

Single-bevel-groove weld (4)
Butt joint (B)
T-joint (T)
Corner joint (C)

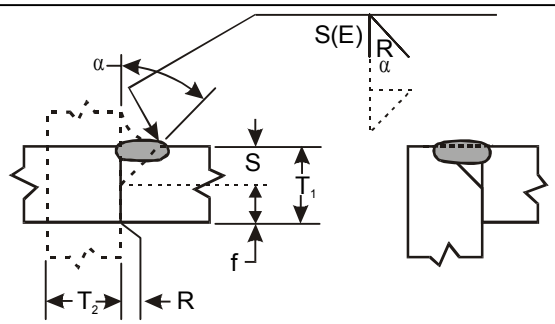

Welding Process	Joint Designation	Base Metal Thickness (U = Unlimited)		Groove Preparation			Permitted Welding Positions	Weld Size (E)	Notes
				Root Opening Root Face Groove Angle	Tolerances				
		T_1	T_2		As Detailed	As Fit-Up			
SMAW	BTC-P4	U	U	R = 0 f = 1/8 min α = 45°	+1/16, -0 unlimited +10°, -0°	+1/8 -1/16 ± 1/16 +10°, -5°	All	S-1/8	B, D, E, J,N,V
GMAW FCAW	BTC-P4-GF	1/4 min	U	R = 0 f = 1/8 min α = 45°	+1/16, -0 unlimited +10°, -0°	+1/8 -1/16 ± 1/16 +10°, -5°	F, H	S	A, B, E, J, N, V
							V, OH	S-1/8	
SAW	TC-P4-S	7/16 min	U	R = 0 f = 1/4 min α = 60°	± 0 +U, -0 +10°, -0°	+1/16, -0 ± 1/16 +10°, -5°	F	S	B, E, J, N, V

Double-bevel-groove weld (5)
Butt joint (B)
T-joint (T)
Corner joint (C)

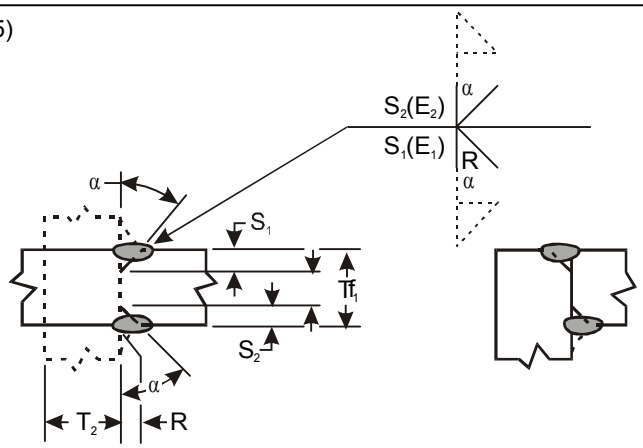

Welding Process	Joint Designation	Base Metal Thickness (U = Unlimited)		Groove Preparation			Permitted Welding Positions	Total Weld Size ($E_1 + E_2$)	Notes
				Root Opening Root Face Groove Angle	Tolerances				
		T_1	T_2		As Detailed	As Fit-Up			
SMAW	BTC-P5	5/16	U	R = 0 f = 1/8 min α = 45°	+1/16 -0 unlimited +10°, -0°	+1/8 -1/16 ± 1/16 +10°, -5°	All	$S_1 + S_{2-}$ -1/4	D, E, J, Mp, N, V
GMAW FCAW	BTC-P5-GF	1/2 min	U	R = 0 f = 1/8 min α = 45°	+1/16 -0 unlimited +10°, -0°	+1/8 –1/16 ± 1/16 +10°, -5°	F, H	$S_1 + S_2$	A, E, J, Mp, N, V
							V, OH	$S_1 + S_{2-}$ -1/4	
SAW	TC-P5-S	3/4min	U	R = 0 f = 1/4 min α = 60°	± 0 +U, -0 +10°, -0°	+1/16 -0 ± 1/16 +10°, -5°	F	$S_1 + S_2$	E, J, Mp, N, V

Figure E.1 (Sheet 3) — Prequalified Partial Joint Preparation (PJP) Groove Welded Joint Details (see 3.8)
Top — Single-bevel-groove weld, butt, or T-, or corner joint
Bottom — Double bevel-groove weld, butt, or T-, or corner joint

See Notes on Page 149

Single-U-groove weld (6)
Butt joint (B)
Corner joint (C)

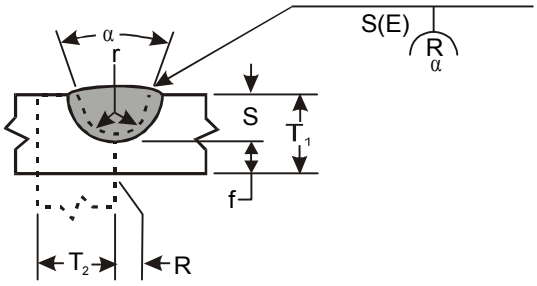

Welding Process	Joint Designation	Base Metal Thickness (U = Unlimited) T_1	T_2	Groove Preparation: Root Opening, Root Face, Groove Radius, Groove Angle	Tolerances: As Detailed	Tolerances: As Fit-Up	Permitted Welding Positions	Weld Size (E)	Notes
SMAW	BC-P6	1/4 min	U	R = 0 f = 1/32 min r = 1/4 α = 45°	+1/16, -0 +U, -0 +1/4, -0 +10°, -0°	+1/8 -1/16 ± 1/16 ± 1/16 +10°, -5°	All	S	B, D, E, N
GMAW FCAW	BC-P6-GF	1/4 min	U	R = 0 f = 1/8 min r = 1/4 α = 20°	+1/16, -0 +U, -0 +1/4, -0 +10°, -0°	+1/8 -1/16 ± 1/16 ± 1/16 +10°, -5°	All	S	A, B, E, N
SAW	BC-P6-S	7/16 min	U	R = 0 f = 1/4 min r = 1/4 α = 20°	± 0 +U, -0 +1/4, -0 +10°, -0°	+1/16 –0 ± 1/16 ± 1/16 +10°, -5°	F	S	B, E, N

Double-U-groove weld (7)
Butt joint (B)

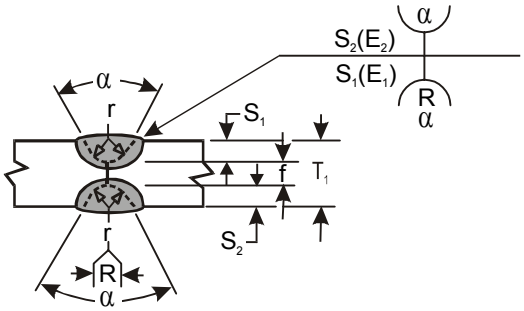

Welding Process	Joint Designation	Base Metal Thickness (U = Unlimited) T_1	T_2	Groove Preparation: Root Opening, Root Face, Groove Radius, Groove Angle	Tolerances: As Detailed	Tolerances: As Fit-Up	Permitted Welding Positions	Weld Size (E)	Notes
SMAW	B-P7	1/2 min	—	R = 0 f = 1/8 min r = 1/4 α = 45°	+1/16, -0 +U, -0 +1/4, -0 +10°, -0°	+1/8 -1/16 ± 1/16 ± 1/16 +10°, -5°	All	$S_1 + S_2$	D, E, Mp, N
GMAW FCAW	B-P7-GF	1/2 min	—	R = 0 f = 1/8 min r = 1/4 α = 20°	+1/16, -0 +U, -0 +1/4, -0 +10°, -0°	+1/8 -1/16 ± 1/16 ± 1/16 +10°, -5°	All	$S_1 + S_2$	A, E, Mp, N
SAW	B-P7-S	3/4 min	—	R = 0 f = 1/4 min r = 1/4 α = 20°	± 0 +U, -0 +1/4, -0 +10°, -0°	+1/16 –0 ± 1/16 ± 1/16 +10°, -5°	F	$S_1 + S_2$	E, Mp, N

Figure E.1 (Sheet 4) — Prequalified Partial Joint Preparation (PJP) Groove Welded Joint Details (see 3.8)
Top — Single U-groove weld, butt or corner joint
Bottom — Double U-groove weld, butt joint

See Notes on Page 149

Single J-groove weld (8)
Butt joint (B)
T-joint (T)
Corner joint (C)

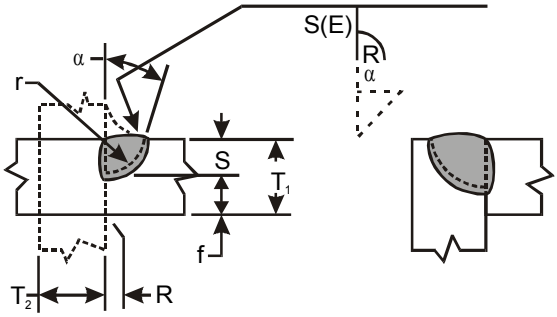

Welding Process	Joint Designation	Base Metal Thickness (U = Unlimited)		Groove Preparation			Permitted Welding Positions	Weld Size (E)	Notes
				Root Opening Root Face Groove Radius Groove Angle	Tolerances				
		T_1	T_2		As Detailed	As Fit-Up			
SMAW	TC-P8*	1/4 min	U	R = 0 f = 1/8 min r = 3/8 α = 45°	+1/16, -0 +U, -0 +1/4, -0 +10°, -0°	+1/8 -1/16 ± 1/16 ± 1/16 +10°, -5°	All	S	D, E, J, N, V
SMAW	BC-P8**	1/4 min	U	R = 0 f = 1/8 min r = 3/8 α = 30°	+1/16, -0 +U, -0 +1/4, -0 +10°, -0°	+1/8 -1/16 ± 1/16 ± 1/16 +10°, -5°	All	S	D, E, J, N,V
GMAW FCAW	TC-P8-GF*	1/4 min	U	R = 0 f = 1/8 min r = 3/8 α = 45°	+1/16, -0 +U, -0 +1/4, -0 +10°, -0°	+1/8 -1/16 ± 1/16 ± 1/16 +10°, -5°	All	S	A, E, J, N, V
GMAW FCAW	BC-P8-GF**	1/4 min	U	R = 0 f = 1/8 min r = 3/8 α = 30°	+1/16, -0 +U, -0 +1/4, -0 +10°, -0°	+1/8 -1/16 ± 1/16 ± 1/16 +10°, -5°	All	S	A, E, J, N, V
SAW	TC-P8-S*	7/16 min	U	R = 0 f = 1/4 min r = 1/2 α = 45°	± 0 +U, -0 +1/4, -0 +10°, -0°	+1/16 -0 ± 1/16 ± 1/16 +10°, -5°	F	S	E, J, N, V
SAW	C-P8-S**	7/16 min	U	R = 0 f = 1/4 min r = 1/2 α = 20°	± 0 +U, -0 +1/4, -0 +10°, -0°	+1/16 –0 ± 1/16 ± 1/16 +10°, -5°	F	S	E, J, N, V

* Applies to inside corner joints.
** Applies to outside corner joints.

Figure E.1 (Sheet 5) — Prequalified Partial Joint Preparation (PJP) Groove Welded Joint Details (see 3.8) Single U-groove weld, butt, or T-, or corner joint

See Notes on Page 149

Double-J-groove weld (9)
Butt joint (B)
T-joint (T)
Corner joint (C)

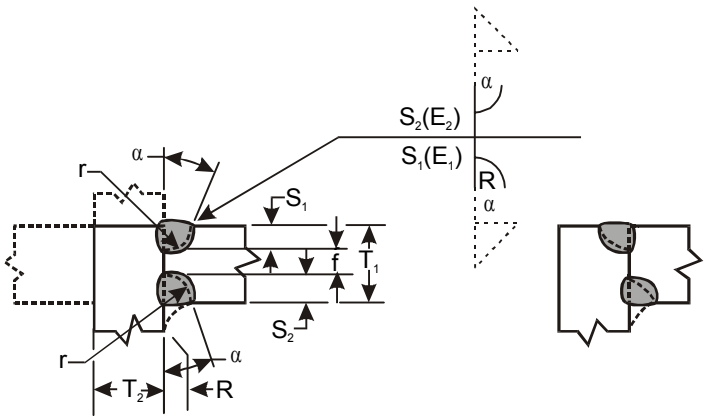

Welding Process	Joint Designation	Base Metal Thickness (U = Unlimited)		Groove Preparation			Permitted Welding Positions	Weld Size (E)	Notes
				Root Opening Root Face Groove Radius Groove Angle	Tolerances				
		T_1	T_2		As Detailed	As Fit-Up			
SMAW	BTC-P9*	1/2 min	U	R = 0 f = 1/8 min r = 3/8 α = 45°	+1/16, -0 +U, -0 +1/4, -0 +10°, -0°	+1/8 -1/16 ± 1/16 ± 1/16 +10°, -5°	All	$S_1 + S_2$	D, E, J, Mp. N, V
GMAW FCAW	BTC-P9-GF**	1/2min	U	R = 0 f = 1/8 min r = 3/8 α = 30°	+1/16, -0 +U, -0 +1/4, -0 +10°, -0°	+1/8 -1/16 ± 1/16 ± 1/16 +10°, -5°	All	$S_1 + S_2$	A, J, Mp, N, V
SAW	C-P9-S*	3/4 min	U	R = 0 f = 1/4 min r = 1/2 α = 45°	± 0 +U, -0 +1/4, -0 +10°, -0°	+1/16 -0 ± 1/16 ± 1/16 +10°, -5°	F	$S_1 + S_2$	E, J, Mp, N, V
SAW	C-P9-S**	3/4 min	U	R = 0 f = 1/4 min r = 1/2 α = 20°	± 0 +U, -0 +1/4, -0 +10°, -0°	+1/16 -0 ± 1/16 ± 1/16 +10°, -5°	F	$S_1 + S_2$	E, J, Mp, N, V
SAW	T-P9-S	3/4 min	U	R = 0 f = 1/4 min r = 1/2 α = 45°	± 0 +U, -0 +1/4, -0 +10°, -0°	+1/16 -0 ± 1/16 ± 1/16 +10°, -5°	F	$S_1 + S_2$	E, J, Mp, N

* Applies to inside corner joints.
** Applies to outside corner joints.

Figure E.1 (Sheet 6) — Prequalified Partial Joint Preparation (PJP) Groove Welded Joint Details (see 3.8) Double J-groove weld, butt, or T-, or corner joint

See Notes on Page 149

Flare-bevel-groove weld (10)
Butt joint (B)
T-joint (T)
Corner joint (C)

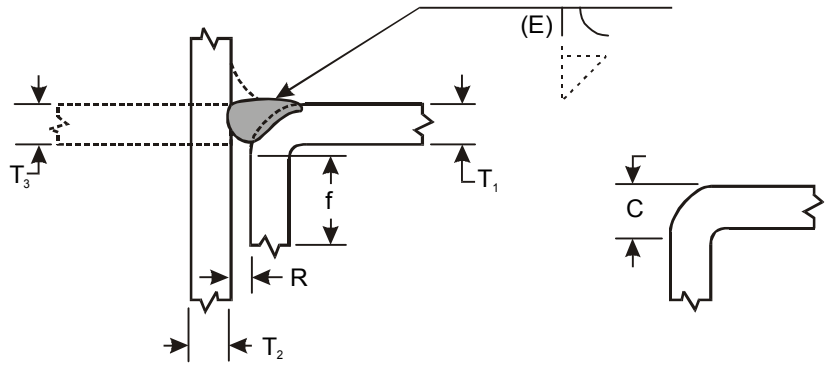

Welding Process	Joint Designation	Base Metal Thickness (U = Unlimited)			Groove Preparation			Permitted Welding Positions	Weld Size (E)	Notes
					Root Opening Root Face Bend Radius*	Tolerances				
		T_1	T_2	T_3		As Detailed	As Fit-Up			
SMAW	BTC-P10	3/16 min	U	T_1 min	R = 0 f = 3/16 min $C = \frac{3T_1}{2}$ min	+1/16, -0 +U, -0 -0, +Not Limited	+1/8 -1/16 +U, -1/16 -0, +Not Limited	All	5/8 T_1	D, J, N, Z
GMAW FCAW	BTC-P10-GF	3/16 min	U	T_1 min	R = 0 f = 3/16 min $C = \frac{3T_1}{2}$ min	+1/16, -0 +U, -0 -0, +Not Limited	+1/8 -1/16 +U, -1/16 -0, +Not Limited	All	5/8 T_1	A, J, N, Z
SAW	T-P10-S	1/2 min	1/2 min	N/A	R = 0 f = 1/2 min $C = \frac{3T_1}{2}$ min	± 0 +U, -0 -0, +Not Limited	+1/16 –0 +U, -1/16 -0, +Not Limited	F	5/8 T_1	J, N, Z

* For cold formed (A500) rectangular tubes, C dimension is not limited, see the following:

Effective weld size of Flare-Bevel-Groove Welded Joints. Test have been performed on cold formed ASTM A500 material exhibiting a "c" dimension as small as T_1 with a nominal radius of 2t. As the radius increases, the "c" dimension also increases. The corner curvature may not be a quadrant of a circle tangent to the sides. The corner dimension "c" may be less than the radius of the corner.

Figure E.1 (Sheet 7) — Prequalified Partial Joint Preparation (PJP) Groove Welded Joint Details (see 3.8) Flare bevel groove weld, butt or T- or corner joint

See Notes on Page 149

Square-groove weld (1)
Butt joint (B)
Corner joint (C)

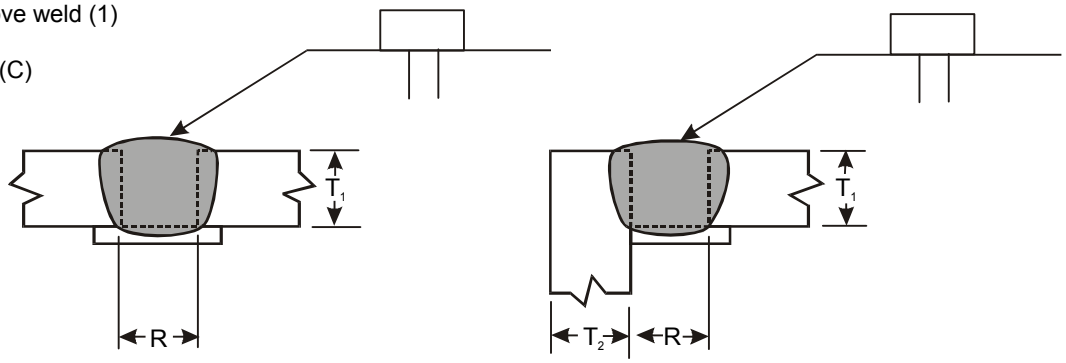

B-L1a **C-L1a**

Welding Process	Joint Designation	Base Metal Thickness (U = Unlimited)		Groove Preparation			Permitted Welding Positions	Gas Shielding for FCAW	Notes
				Root Opening	Tolerances				
		T_1	T_2		As Detailed	As Fit-Up			
SMAW	B-L1a	1/4 max	—	$R = T_1$	+1/16, -0	+1/4, -1/16	All	—	D,N
	C-L1a	1/4 max	U	$R = T_1$	+1/16, -0	+1/4, -1/16	All	—	D,N
FCAW GMAW	B-L1a-GF	3/8 max	—	$R = T_1$	+1/16, -0	+1/4, -1/16	All	Not required	A, N

Square-groove weld (1)
Butt joint (B)

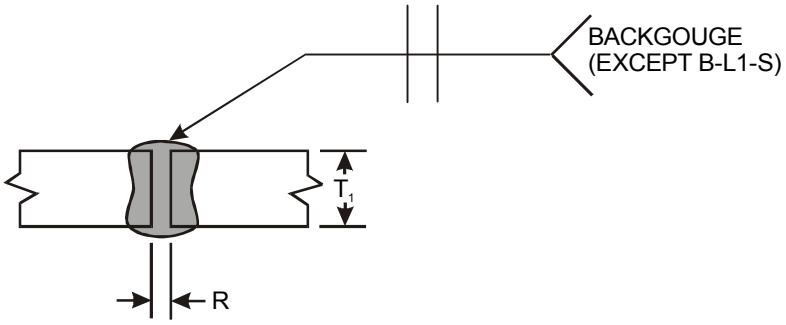

Welding Process	Joint Designation	Base Metal Thickness (U = Unlimited)		Groove Preparation			Permitted Welding Positions	Gas Shielding for FCAW	Notes
				Root Opening	Tolerances				
		T_1	T_2		As Detailed	As Fit-Up			
SMAW	B-L1b	1/4 max	—	$R = \frac{T_1}{2}$	+1/16, -0	+1/16, -1/8	All	—	C, D, N
GMAW FCAW	B-L1b-GF	3/8 max	—	R = 0 to 1/8	+1/16, -0	+1/16, -1/8	All	Not required	A, C, N
SAW	B-L1-S	3/8 max	—	R = 0	±0	+1/16, -0	F	—	N
SAW	B-L1a-S	5/8 max	—	R = 0	±0	+1/16, -0	F	—	C, N

Figure E.2 (Sheet 1) — Prequalified Complete Joint Preparation (CJP) Groove Welded Joint Details (see 3.9)
Top — Square-groove weld with backing, butt or corner joint
Bottom — Square-groove weld without backing, butt joint

See Notes on Page 149

Square-groove weld (1)
T-joint (T)
Corner joint (C)

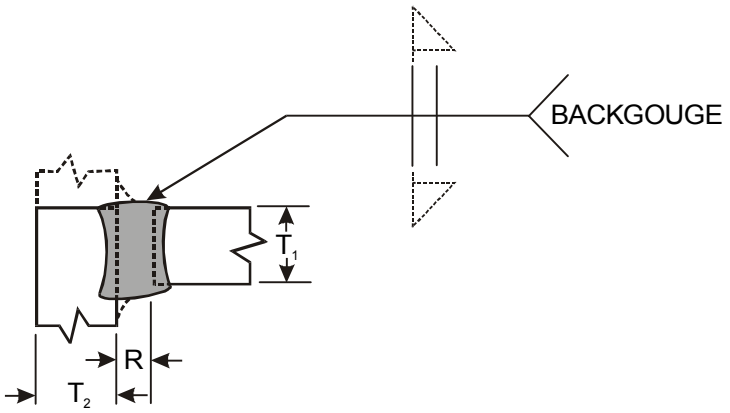

Welding Process	Joint Designation	Base Metal Thickness (U = Unlimited)		Groove Preparation			Permitted Welding Positions	Gas Shielding for FCAW	Notes
				Root Opening	Tolerances				
		T_1	T_2		As Detailed	As Fit-Up			
SMAW	TC-L1b	1/4 max	U	$R = \frac{T_1}{2}$	+1/16, -0	+1/16, -1/8	All	—	C,D,J
GMAW FCAW	TC-L1GF	3/8 max	U	R=0 to 1/8	+1/16, -0	+1/16, -1/8	All	Not required	A,C,J
SAW	TC-L1-S	3/8 max	U	R=0	±0	=1/16, -0	F	—	C,J

Single-V-groove weld (2)
Butt joint

Tolerances	
As Detailed	As Fit-Up
R = +1/16, -0	+1/4, -1/16
α = +10°, -0°	+10°, -5°

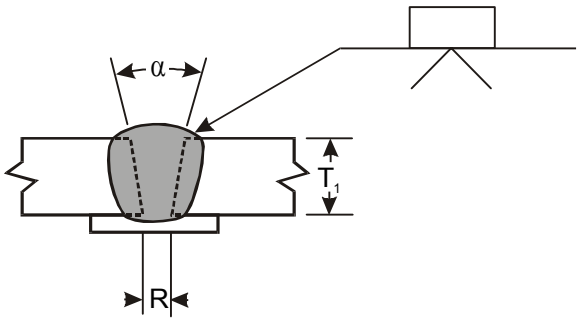

Welding Process	Joint Designation	Base Metal Thickness (U = Unlimited)		Groove Preparation		Permitted Welding Positions	Gas Shielding For FCAW	Notes
		T_1	T_2	Root Opening	Groove Angle			
SMAW	B-U2a	U	—	R=1/4	α=45°	All	—	D,N
				R=3/8	α=30°	F,V,OH	—	D,N
				R=1/2	α=20°	F,V,OH	—	D,N
GMAW FCAW	B-U2A-GF	U	—	R=3/16	α=30°	F,V,OH	Required	A,N
				R=3/8	α=30°	F,V,OH	Not req.	A,N
				R=1/4	α=45°	F,V,OH	Not req.	A,N
SAW	B-L2a-S	2 max	—	R=1/4	α=30°	F	—	N
SAW	B-U2-S	U	—	R=5/8	α=20°	F	—	N

Figure E.2 (Sheet 2) — Prequalified Complete Joint Preparation (CJP) Groove Welded Joint Details (see 3.9)
Top — Square-groove weld, T- or corner joint
Bottom — Single-V-groove weld, butt joint

See Notes on Page 149

Single-V-groove weld (2)
Corner Joint (C)

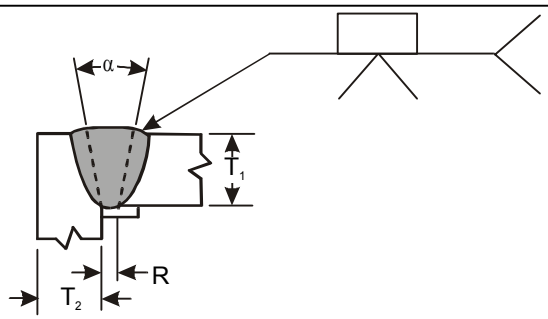

Tolerances	
As Detailed	As Fit-Up
R = +1/16, -0	+1/4, -1/16
α = +10°, -0°	+10°, -5°

Welding Process	Joint Designation	Base Metal Thickness (U = Unlimited)		Groove Preparation		Permitted Welding Positions	Weld Size (E)	Notes
		T_1	T_2	Root Opening	Groove Angle			
SMAW	C-U2a	U	U	R = 1/4	α = 45°	All	—	D, N
				R = 3/8	α = 30°	F, V, OH	—	D, N
				R = 1/2	α = 20°	F, V, OH	—	D, N
GMAW FCAW	C-U2a-GF	U	U	R = 3/16	α = 30°	F, V, OH	Required	A
				R = 3/8	α = 30°	F, V, OH	Not req.	A, N
				R = 1/4	α = 45°	F, V, OH	Not req.	A, N
SAW	C-L2a-S	2 max	U	R = 1/4	α = 30°	F	—	N
SAW	C-U2-S	U	U	R = 5/8	α = 20°	F	—	N

Single-V-groove weld (2)
Butt joint (B)

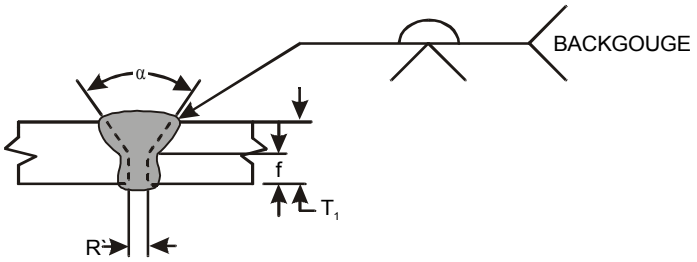

Welding Process	Joint Designation	Base Metal Thickness (U = Unlimited)		Groove Preparation			Permitted Welding Positions	Gas Shielding for FCAW	Notes
				Root Opening Root Face Groove Angle	Tolerances				
		T_1	T_2		As Detailed	As Fit-Up			
SMAW	B-U2	U	—	R = 0 to 1/8 f = 0 to 1/8 α = 60°	+1/16. -0 +1/16, -0 +10°, -0°	+1/16. –1/8 Not limited +10°, -5°	All	—	C, D, N
GMAW FCAW	B-U2-GF	U	—	R = 0 to 1/8 f = 0 to 1/8 α = 60°	+1/16. -0 +1/16, -0 +10°, -0°	+1/16. –1/8 Not limited +10°, -5°	All	Not Required	A, C N
SAW	B-L2c-S	Over 1/2 to 1	—	R = 0 f = 1/4 max α = 60°	R = ±0 f = +0, -f α = +10°, -0°	+1/16. –0 ± 1/16 +10°, -5°	F	—	C, N
		Over 1 to 1-1/2	—	R = 0 f = 1/2 max α = 60°					
		Over 1-1/2 to 2	—	R = 0 f = 5/8 max α = 60°					

Figure E.2 (Sheet 3) — Prequalified Complete Joint Preparation (CJP) Groove Welded Joint Details (see 3.9)
Top — Single V-groove weld, corner joint
Bottom — Single-V-groove weld, butt joint

See Notes on Page 149

Single-groove weld (2)
Corner joint (C)

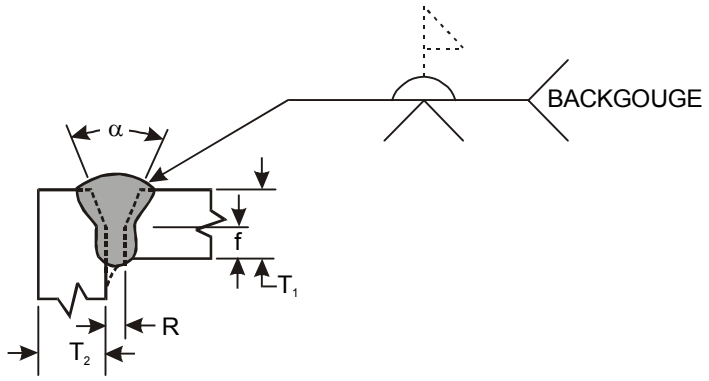

Welding Process	Joint Designation	Base Metal Thickness (U = Unlimited)		Groove Preparation			Permitted Welding Positions	Gas Shielding for FCAW	Notes
				Root Opening Root Face Groove Angle	Tolerances				
		T_1	T_2		As Detailed	As Fit-Up			
SMAW	C-U2	U	U	R=0 to 1/8 f=0 to 1/8 α=60°	+1/16, -0 +1/16, -0 +10°, -0°	+1/16, -1/8 Not limited +10°, -5°	All	—	C, D, J, N
GMAW FCAW	C-U2-GF	U	U	R=0 to 1/8 f=0 to 1/8 α=60°	+1/16, -0 +1/16, -0 +10°, -0°	+1/16, -1/8 Not limited +10°, -5°	All	Not required	A, C, J, N
SAW	C-U2b-S	U	U	R=0 to 1/8 f=1/4 max α=60°	±0 +0, -1/4 +10°, -0°	+1/16, -0 ±1/16 +10°, -5°	F	—	C, J, N

Double-V-groove weld (3)
Butt joint (B)

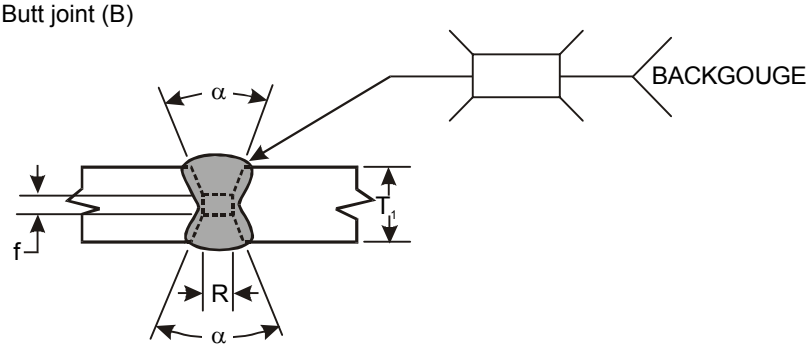

		Tolerances	
		As Detailed	As Fit-Up
		R = ±0	+1/4, -0
		f = ±0	+1/16, -0
		α = +10°, -0°	+10°, -5°
Spacer	SAW	±0	+1/16, -0
	SMAW	±0	+1/8, -0

Welding Process	Joint Designation	Base Metal Thickness (U = Unlimited)		Groove Preparation			Permitted Welding Positions	Gas Shielding for FCAW	Notes
				Root Opening	Root Face	Groove Angle			
		T_1	T_2						
SMAW	B-U3a	U Spacer = 1/8 x R	—	R = 1/4	f = 0 to 1/8	α = 45°	All	—	C, D, M, N
				R = 3/8	f = 0 to 1/8	α = 30°	F, V, OH		
				R = 1/2	f = 0 to 1/8	α = 20°	F, V, OH		
SAW	B-U3a-S	U Spacer = 1/4 x R	—	R = 5/8	f = 0 to 1/4	α = 20°	F	—	C, M, N

Figure E.2 (Sheet 4) — Prequalified Complete Joint Preparation (CJP) Groove Welded Joint Details (see 3.9)
Top — Single-V-groove weld, corner joint
Bottom — Double-V-groove weld, butt joint

See Notes on Page 149

Double-V-groove weld (3)
Butt joint (B)

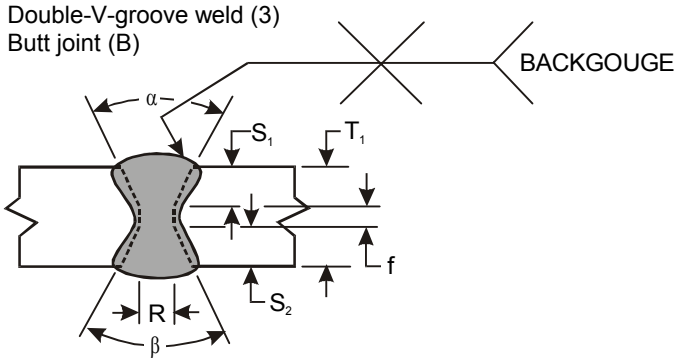

For B-U3c-S only		
T_1		S1
Over 2	To 2-1/2	1-3/8
2-1/2	3	1-3/4
3	3-5/8	2-1/8
3-5/8	4	2-3/8
4	4-3/4	2-3/4
4-3/4	5-1/2	3-1/4
5-1/2	6-1/4	3-3/4
For T_1 > 6-1/4 or $T_1 \leq 2$ $S_1 = 2/3\ (T_1 - 1/4)$		

Welding Process	Joint Designation	Base Metal Thickness (U = Unlimited)		Groove Preparation			Permitted Welding Positions	Gas Shielding for FCAW	Notes
				Root Opening Root Face Groove Angle	Tolerances				
		T_1	T_2		As Detailed	As Fit-Up			
SMAW	B-U3b	U	—	R = 0 to 1/8 f = 0 to 1/8 α = β = 60°	+1/16. -0 +1/16. -0 +10°, -0°	+1/16, -1/8 Not limited +10°, -5°	All	—	C, D, M, N
GMAW FCAW	B-U3-GF						All	Not required	A, C, M, N
SAW	B-U3c-S	U	—	R = 0 f = 1/4 min α = β = 60°	+1/16. -0 +1/4. -0 +10°, -0°	+1/16. -0 +1/4. -0 +10°, -5°	F	—	C, M, N
				To find S_1 see table above; $S_2 = T_1 - (S_1 + f)$					

Single-bevel-groove weld (4)
Butt joint (B)

Tolerances	
As Detailed	As Fit-Up
R = +1/16, -0	+1/4, -1/16
α = +10°, -0°	+10°, -5°

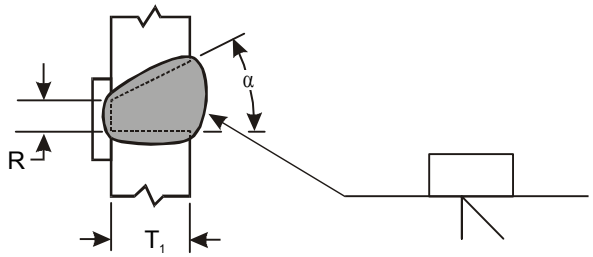

Welding Process	Joint Designation	Base Metal Thickness (U = Unlimited)		Groove Preparation		Permitted Welding Positions	Gas Shielding for FCAW	Notes
		T_1	T_2	Root Opening	Groove Angle			
SMAW	B-U4a	U	—	R = 1/4	α = 45°	All	—	Br, D, N
				R = 3/8	α = 30°	All	—	Br, D, N
GMAW FCAW	B-U4a-GF	U	—	R = 3/16	α = 30°	All	Required	A, Br, N
				R = 1/4	α = 45°	All	Not req.	A, Br, N
				R = 3/8	α = 30°	F	Not req.	A, Br, N

Figure E.2 (Sheet 5) — Prequalified Complete Joint Preparation (CJP) Groove Welded Joint Details (see 3.9)
Top — Double -V -groove weld, butt joint
Bottom — Single-bevel-groove weld, butt joint

See Notes on Page 149

Single-bevel-groove weld (4)
T-joint (T)
Corner joint (C)

Tolerances	
As Detailed	As Fit-Up
R = +1/16, -0	+1/4, -1/16
α = +10°, -0°	+10°, -5°

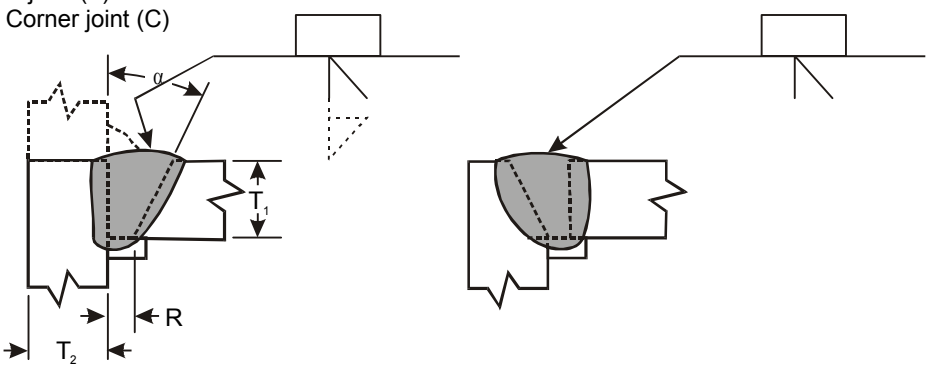

Welding Process	Joint Designation	Base Metal Thickness (U = Unlimited)		Groove Preparation		Permitted Welding Positions	Gas Shielding for FCAW	Notes
		T_1	T_2	Root Opening	Groove Angle			
SMAW	TC-U4a	U	U	R = 1/4	α = 45°	All	—	D, J, N, V
				R = 3/8	α = 30°	F, V, OH	—	D, J, N, V
GMAW FCAW	TC-U4a-GF	U	U	R = 3/16	α = 30°	All	Required	A, J, N, V
				R = 3/8	α = 30°	F	Not req.	A, J, N, V
				R = 1/4	α = 45°	All	Not req.	A, J, N, V
SAW	TC-U4a-S	U	U	R = 3/8	α = 30°	F	—	J, N, V
				R = 1/4	α = 45°			

Single-bevel-groove weld (4)
Butt joint (B)

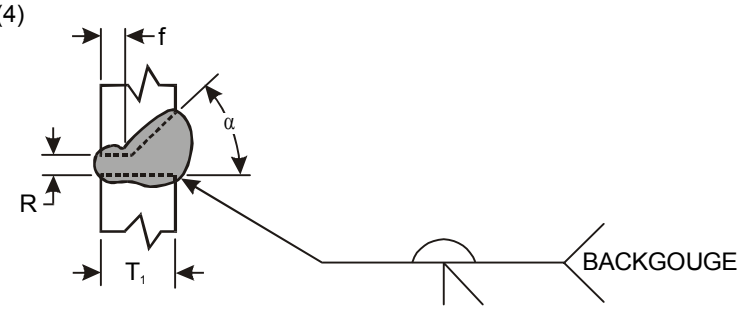

Welding Process	Joint Designation	Base Metal Thickness (U = Unlimited)		Groove Preparation			Permitted Welding Positions	Gas Shielding for FCAW	Notes
				Root Opening Root Face Groove Angle	Tolerances				
		T_1	T_2		As Detailed	As Fit-Up			
SMAW	B-U4b	U	—	R = 0 to 1/8 f = 0 to 1/8 α = 45°	+1/16. –0 +1/16, -0 +10°, -0°	+1/16. –1/8 Not limited +10°, -5°	All	—	Br, C, D, N
GMAW FCAW	B-U4b-GF	U	—				All	Not required	A, Br, C, N

Figure E.2 (Sheet 6) — Prequalified Complete Joint Preparation (CJP) Groove Welded Joint Details (see 3.9)
Top — Single-bevel-groove weld, T- or corner joint
Bottom — Single-bevel-groove weld, butt joint

See Notes on Page 149

Single-bevel-groove weld (4)
T-joint (T)
Corner joint (C)

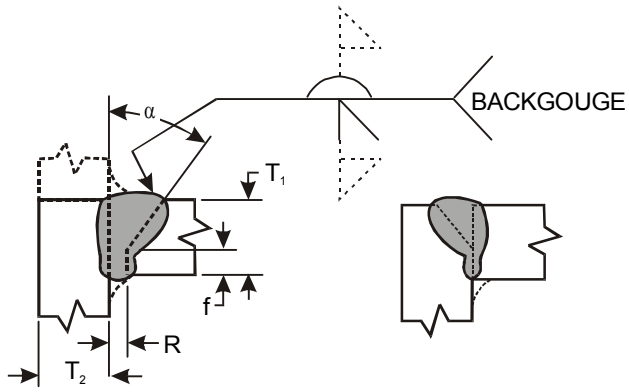

Welding Process	Joint Designation	Base Metal Thickness (U = Unlimited) T_1	Base Metal Thickness (U = Unlimited) T_2	Groove Preparation: Root Opening Root Face Groove Angle	Groove Preparation: Tolerances As Detailed	Groove Preparation: Tolerances As Fit-Up	Permitted Welding Positions	Gas Shielding for FCAW	Notes
SMAW	TC-U4b	U	U	R = 0 to 1/8 f = 0 to 1/8 α = 45°	+1/16. –0 +1/16, -0 +10°, -0°	+1/16. –1/8 Not limited +10°, -5°	All	—	C, D, J, N, V
GMAW FCAW	TC-U4b-GF	U	U				All	Not required	A, C, J, N, V
SAW	TC-U4b-S	U	U	R = 0 f = 1/4 max α = 60°	±0 +0, -1/8 +10°, -0°	+1/4 -0 ±1/16 +10°, -5°	F	—	C, J, N, V

Double-bevel-groove weld (5)
Butt joint (B)
T-joint (T)
Corner joint (C)

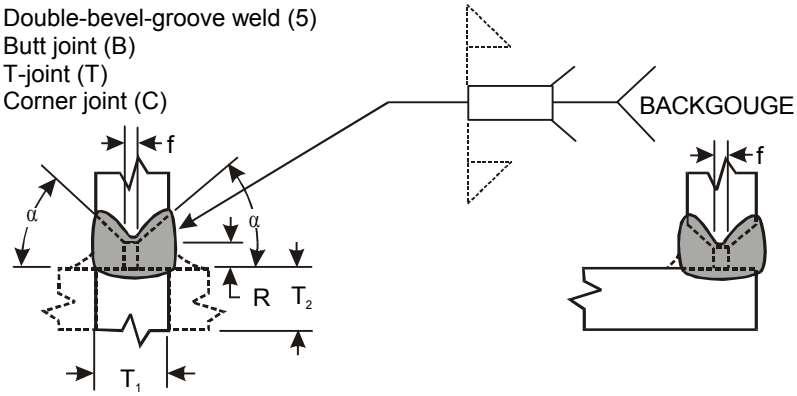

	Tolerances As Detailed	Tolerances As Fit-Up
	R = ±0	+1/4, -0
	f = +1/16, -0	±1/16
	α = +10°, -0°	+10°, -5°
Spacer	+1/16, -0	+1/8, -0

Welding Process	Joint Designation	Base Metal Thickness (U = Unlimited) T_1	Base Metal Thickness (U = Unlimited) T_2	Groove Preparation: Root Opening	Groove Preparation: Root Face	Groove Preparation: Groove Angle	Permitted Welding Positions	Gas Shielding for FCAW	Notes
SMAW	B-U5b	U Spacer = 1/8 x R	U	R = 1/4	f = 0 to 1/8	α = 45°	All	—	Br, C, D, M, N
	TC-U5a	U Spacer = 1/4 x R	U	R = 1/4	f = 0 to 1/8	α = 45°	All	—	C, D, J, M, N, V
				R = 3/8	f = 0 to 1/8	α = 30°	F, OH	—	C, D, J, M, N, V

Figure E.2 (Sheet 7) — Prequalified Complete Joint Preparation (CJP) Groove Welded Joint Details (see 3.9)
Top — Single-bevel-groove weld, T- or corner joint
Bottom — Double-bevel-groove weld, butt, or T-, or corner joint

See Notes on Page 149

Double-bevel-groove weld (5)
Butt joint (B)

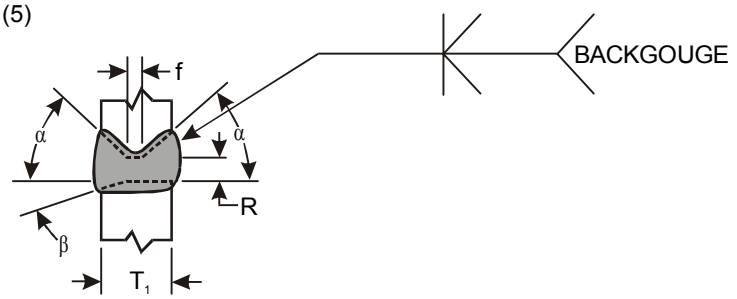

Welding Process	Joint Designation	Base Metal Thickness (U = Unlimited)		Groove Preparation			Permitted Welding Positions	Gas Shielding for FCAW	Notes
				Root Opening Root Face Groove Angle	Tolerances				
		T_1	T_2		As Detailed	As Fit-Up			
SMAW	B-U5a	U	—	R = 0 to 1/8 f = 0 to 1/8 α = 45° β = 0° to 15°	+1/16. –0 +1/16, -0 $\alpha + \beta^{+10°}_{-0°}$	+1/16. –1/8 Not limited $\alpha + \beta^{+10°}_{-5°}$	All	—	Br, C, D, M, N
GMAW FCAW	B-U5-GF	U	—	R = 0 f = 0 to 1/8 α = 45° β = 0° to 15°	+ 1/16 -0, + 1/16 -0, $\alpha + \beta =$ + 10°, -0°	+1/16 –1/8 Not limited $\alpha + \beta =$ + 10°, -5°	All	Not required	A, Br, C, M, N

Double-bevel-groove weld (5)
T-joint (T)
Corner joint (C)

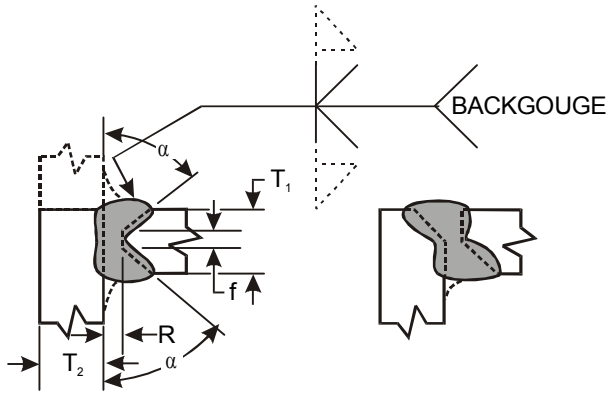

Welding Process	Joint Designation	Base Metal Thickness (U = Unlimited)		Groove Preparation			Permitted Welding Positions	Gas Shielding for FCAW	Notes
				Root Opening Root Face Groove Angle	Tolerances				
		T_1	T_2		As Detailed	As Fit-Up			
SMAW	TC-U5b	U	U	R = 0 to 1/8 f = 0 to 1/8 α = 45°	+1/16. -0 +1/16, -0 +10°, -0°	+1/16. -1/8 Not limited +10°, -5°	All	—	C, D, J, M, N, V
GMAW FCAW	TC-U5-GF	U	U				All	Not required	A, C, J, M, N, V
SAW	TC-U5-S	U	U	R = 0 f = 3/16 max α = 60°	± 0 +0, -3/16 +10°, -0°	+1/16 -0 $\pm$1/16 +10°, -5°	F	—	C, J, M, N, V

Figure E.2 (Sheet 8) — Prequalified Complete Joint Preparation (CJP)
Groove Welded Joint Details (see 3.9)
Top — Double-bevel-groove weld, butt joint
Bottom — Double-bevel-groove weld, T-, or corner joint

See Notes on Page 149

Single-U-groove (6)
Butt joint (B)
Corner joint (C)

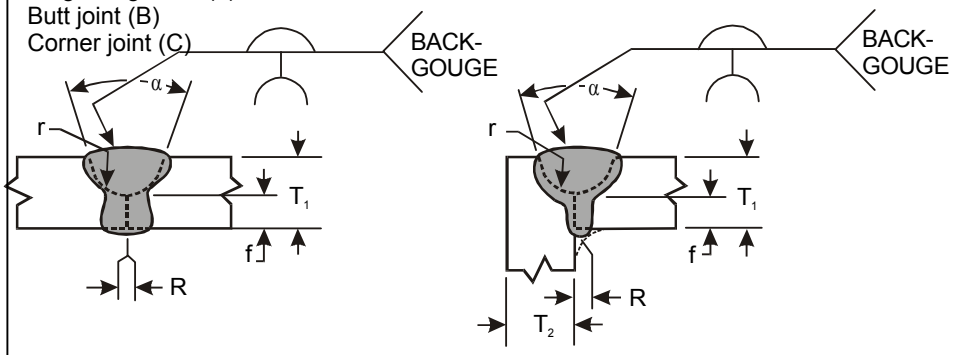

Tolerances	
As Detailed	As Fit-Up
R = +1/16, -0	+1/16, -1/8
α = +10°, -0°	+10°, -5°
f = ±1/16	Not Limited
r = +1/8, -0	+1/8, -0

Welding Process	Joint Designation	Base Metal Thickness (U = Unlimited)		Groove Preparation				Permitted Welding Positions	Gas Shielding For FCAW	Notes
		T_1	T_2	Root Opening	Groove Angle	Root Face	Groove Radius			
SMAW	B-U6	U	U	R=0 to 1/8	α = 45°	f = 1/8	r = 1/4	All	—	C, D, N
				R=0 to 1/8	α = 20°	f = 1/8	r = 1/4	F, OH	—	C, D, N
	C-U6	U	U	R=0 to 1/8	α = 45°	f = 1/8	r = 1/4	All	—	C, D, J, N
				R=0 to 1/8	α = 20°	f = 1/8	r = 1/4	F, OH	—	C, D, J, N
GMAW FCAW	B-U6-GF	U	U	R=0 to 1/8	α = 20°	f = 1/8	r = 1/4	All	Not req.	A, C, N
	C-U6-GF	U	U	R=0 to 1/8	α = 20°	f = 1/8	r = 1/4	All	Not req.	A, C, N, J

Double-U-groove (7)
Butt joint (B)

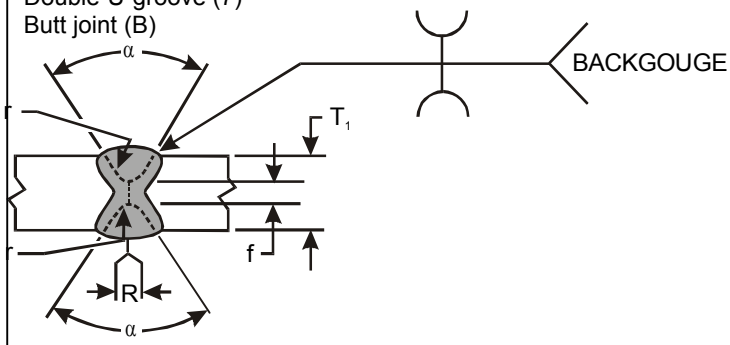

Tolerances	
As Detailed	As Fit-Up
For B-U7 and B-U7-GF	
R = +1/16, -0	+1/16, -1/8
α = +10°, -0°	+10°, -5°
f = ±1/16, -0	Not Limited
r = +1/4, -0	±1/16
For B-U7-S	
R = ±0	+1/16, -0
f = +0, -1/4	±1/16

Welding Process	Joint Designation	Base Metal Thickness (U = Unlimited)		Groove Preparation				Permitted Welding Positions	Gas Shielding for FCAW	Notes
		T_1	T_2	Root Opening	Groove Angle	Root Face	Groove Radius			
SMAW	B-U7	U	—	R=0 to 1/8	α = 45°	f = 1/8	r = 1/4	All	—	C, D, M, N
				R=0 to 1/8	α = 20°	f = 1/8	r = 1/4	F, OH	—	C, D, M, N
GMAW FCAW	B-U7-GF	U	—	R=0 to 1/8	α = 20°	f = 1/8	r = 1/4	All	Not required	A, C, M, N
SAW	B-U7-S	U	—	R=0	α = 20°	f = 1/4 max	r = 1/4	F	—.	C, M, N

Figure E.2 (Sheet 9) — Prequalified Complete Joint Preparation (CJP) Groove Welded Joint Details (see 3.9)
Top — Single-U-groove weld, butt or corner joint
Bottom — Double-U-groove weld, butt joint

See Notes on Page 149

Single-J-groove weld (8)
Butt joint (B)

Tolerances	
As Detailed	As Fit-Up
R = +1/16, -0	+1/16, -1/8
α = +10°, -0°	+10°, -5°
f = +1/16, -0	Not Limited
r = +1/4, -0	±1/16

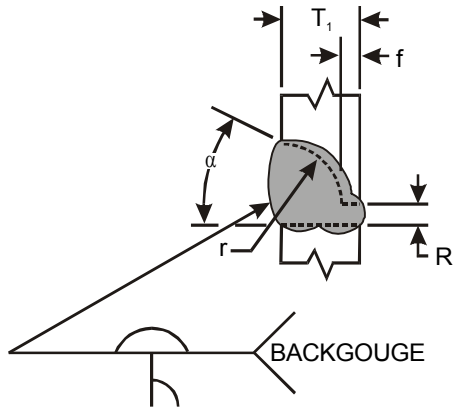

Welding Process	Joint Designation	Base Metal Thickness (U = Unlimited)		Groove Preparation				Permitted Welding Positions	Gas Shielding For FCAW	Notes
		T_1	T_2	Root Opening	Groove Angle	Root Face	Groove Radius			
SMAW	B-U8	U	—	R=0 to 1/8	α = 45°	f = 1/8	r = 3/8	All	—	Br, C, D, N
GMAW FCAW	B-U8-GF	U	—	R=0 to 1/8	α = 30°	f = 1/8	r = 3/8	All	Not required	A, Br, C, N,

Single-J-groove weld (8)
T-joint (T)
Corner joint (C)

Tolerances	
As Detailed	As Fit-Up
R = +1/16, -0	+1/16, -1/8
α = +10°, -0°	+10°, -5°
f = +1/16, -0	Not Limited
r = +1/4, -0	±1/16

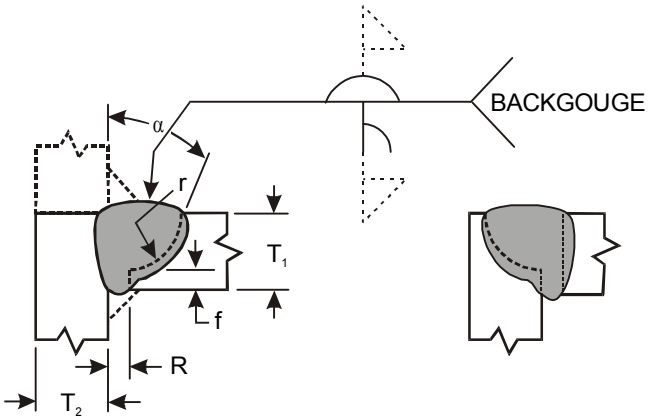

Welding Process	Joint Designation	Base Metal Thickness (U = Unlimited)		Groove Preparation				Permitted Welding Positions	Gas Shielding for FCAW	Notes
		T_1	T_2	Root Opening	Groove Angle	Root Face	Groove Radius			
SMAW	TC-U8a	U	U	R=0 to 1/8	α = 45°	f = 1/8	r = 3/8	All	—	C, D, J N, V
				R=0 to 1/8	α = 30°	f = 1/8	r = 3/8	F, OH	—	C, D, J N, V
GMAW FCAW	TC-U8a-GF	U	U	R=0 to 1/8	α = 30°	f = 1/8	r = 3/8	All	Not required	A, C, J, N, V

Figure E.2 (Sheet 10) — Prequalified Complete Joint Preparation (CJP) Groove Welded Joint Details (see 3.9)
Top — Single-J-groove weld, butt joint
Bottom — Single-J-groove weld, T- or corner joint

See Notes on Page 149

Double-J-groove (9)
Butt joint (B)

Tolerances	
As Detailed	As Fit-Up
R = +1/16, -0	+1/16, -1/8
α = +10°, -0°	+10°, -5°
f = +1/16, -0	Not Limited
r = +1/8, -0	±1/16

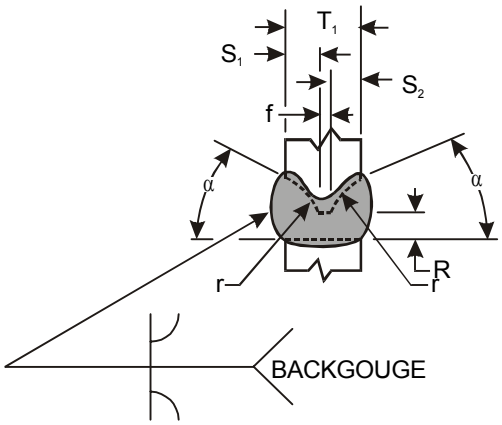

Welding Process	Joint Designation	Base Metal Thickness (U = Unlimited)		Groove Preparation				Permitted Welding Positions	Gas Shielding For FCAW	Notes
		T_1	T_2	Root Opening	Groove Angle	Root Face	Groove Radius			
SMAW	B-U9	U	—	R=0 to 1/8	α = 45°	f = 1/8	r = 3/8	All	—	Br, C, D, M, N
GMAW FCAW	B-U9-GF	U	—	R=0 to 1/8	α = 30°	f = 1/8	r = 3/8	All	Not required	A, Br, C, M, N

Double-J-groove weld (9)
T-joint (T)
Corner joint (C)

Tolerances	
As Detailed	As Fit-Up
R = +1/16, -0	+1/16, -1/8
α = +10°, -0°	+10°, -5°
f = +1/16, -0	Not Limited
r = +1/8, -0	±1/16

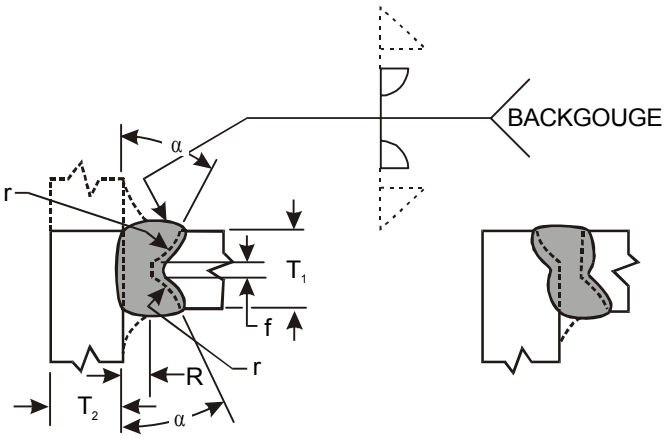

Welding Process	Joint Designation	Base Metal Thickness (U = Unlimited)		Groove Preparation				Permitted Welding Positions	Gas Shielding for FCAW	Notes
		T_1	T_2	Root Opening	Groove Angle	Root Face	Groove Radius			
SMAW	TC-U9a	U	U	R=0 to 1/8	α = 45°	f = 1/8	r = 3/8	All	—	C, D, J, M, N, V
				R=0 to 1/8	α = 30°	f = 1/8	r = 3/8	F, OH	—	C, D, J, M, V
GMAW FCAW	TC-U9a-GF	U	U	R=0 to 1/8	α = 30°	f = 1/8	r = 3/8	All	Not required	A, C, J, M, N, V

Figure E.2 (Sheet 11) — Prequalified Complete Joint Preparation (CJP) Groove Welded Joint Details (see 3.9)
Top — Double-J-groove weld, butt joint
Bottom — Double-J-groove weld, T- or corner joint

This page intentionally blank