PRODUCT FUNCTION SPECIFICATION
FOR THE

IMPROVED ELECTRICAL DISTRIBUTION BOX (IEDB)
FOR THE

MULTIPLE LAUNCH ROCKET SYSTEM (MLRS)

19207-12469848 Revision D

Document Date: 26 February 2003
Contract Number: DAAE07-95-C-X030

Prepared by:
United Defense, L.P.
Ground Systems Division
Santa Clara, CA 95052

This Performance Specification is authorized for
use by The U.S. Army Tank-Automotive Command,
Department of the Army, and is available for use by all Departments and
Agencies of the Department of Defense

Prepared by: Michael Leander Electrical Engineering	Approved by: Richard Gove Design Lead
Approved by: Robert Avery Systems Engineering	Approved by: Norman Collier MLRS A1 Project Engineer
Prepared by: Scott Deprez Product Assurance Manager	Approved by: Gordon Jewett Derivatives Engineering Manager

Status: RELEASED
Date: 04/10/03

REV	DATE	DESCRIPTION	AUTHORITY	APPROVED	
0	10 March 1998	Product Baseline	Z19-462-03		
A	18 January 1999	Direct Change	Z07-462-015		
B	21 June 2000	Update Spec	Z55-410-010		
C	09 August 2002	Product Baseline	ERR FOM-U6497		
		Incorp. ADCN 159369			
D	26 February 2003	Incorporate NOR 9048	ECP/ERR FOM-U7207		

TABLE OF CONTENTS

1. SCOPE 1

1.1 Scope. 1

1.2 Functional overview. 1

1.3 Architectural overview 1

1.4 Major subassemblies/subsections. 2

2. APPLICABLE DOCUMENTS 3

2.1 Government documents. 3
2.1.1 Specifications, standards and handbooks. 3
2.1.2 Other Government documents, drawings, and publications. 4

2.2 Order of precedence 4

3. REQUIREMENTS 4

3.1 First article. 4

3.2 Materials. 5

3.3 Design and construction. 5
3.3.1 Weight. 5
3.3.2 Dimensions. 5
3.3.3 Soldering. 5
3.3.4 Environmental stress screening (ESS). 5
3.3.5 Reliability. 5
3.3.6 Maintainability. 5
3.3.7 Spares. 5
3.3.7.1 Functional integration. 5
3.3.7.2 I/O interface. 5
3.3.7.3 Discrete inputs. 5
3.3.7.4 Multiplexed analog inputs. 6
3.3.7.5 Discrete outputs. 6
3.3.7.6 Circuit card expansion. 6
3.3.7.7 Memory. 6
3.3.8 Serial Data Bus Interface. 6
3.3.8.1 Serial Data Bus Standards. 6
3.3.8.2 Serial Data Bus Interfaces. 6
3.3.8.2.1 Channel A. 6
3.3.8.2.2 Channel B. 6
3.3.8.2.3 Channel C (Reserved). 6
3.3.8.2.4 Channel D. 6
3.3.9 STE/ICE TK mode transducer interface. 7
3.3.10 (Reserved). 7

Status: RELEASED
Date: 04/10/03

3.4 Performance requirements. 7
3.4.1 Input voltages (see 4.6.1.1). 7
3.4.2 Master power. 7
3.4.2.1 Master power switch. 7
3.4.2.1.1 Master power switch ground (see 4.6.1.2). 7
3.4.2.1.2 Master power switch signal (see 4.6.1.2). 7
3.4.2.2 Master power indicator. 7
3.4.2.2.1 Master power indicator ground (see 4.6.1.2). 7
3.4.2.2.2 Master power indicator function (see 4.6.1.3). 7
3.4.2.3 Voltmeter. 8
3.4.2.3.1 Voltmeter function (see 4.6.1.3). 8
3.4.2.4 Cab distribution box (CDB). 8
3.4.2.4.1 CDB (A1-E3) ground (4.6.1.2). 8
3.4.3 Engine on. 8
3.4.3.1 Engine on switch ground (see 4.6.1.2) 8
3.4.3.2 Engine on function (see 4.6.1.4.1). 8
3.4.4 Slave power. 8
3.4.4.1 Slave receptacle. 8
3.4.4.1.1 Slave ground (see 4.6.1.2). 8
3.4.4.1.2 Slave power function(see 4.6.1.5.1). 8
3.4.4.2 Polarity indicator. 8
3.4.4.2.1 Normal polarity indicator light function (see 4.6.1.5.2). 8
3.4.4.2.2 Reverse polarity indicator light function (see 4.6.1.5.3). 9
3.4.5 Utilities/Lighting. 9
3.4.5.1 Lighting. 9
3.4.5.1.1 Lighting ground (see 4.6.1.2). 9
3.4.5.1.2 Blackout (B. O.) markers signal (see 4.6.1.2). 9
3.4.5.1.3 B. O. stoplights signal (see 4.6.1.2). 9
3.4.5.1.4 Service tail lights signal (see 4.6.1.2). 9
3.4.5.1.5 Panel light signal (see 4.6.1.2). 9
3.4.5.1.6 Left turn stoplight signal (see 4.6.1.2). 9
3.4.5.1.7 Right turn stoplight signal (see 4.6.1.2). 9
3.4.5.2 Trailer receptacle. 9
3.4.5.2.1 Trailer receptacle power (see 4.6.1.3). 9
3.4.5.2.2 Trailer receptacle ground (see 4.6.1.2). 9
3.4.6 Launcher and fire control power. 10
3.4.6.1 Launcher power switch. 10
3.4.6.1.1 Launcher power switch ground (see 4.6.1.2). 10
3.4.6.1.2 Launcher power switch function (see 4.6.1.6.1). 10
3.4.6.2 Launcher power indicator. 10
3.4.6.2.1 Launcher power indicator power (see 4.6.1.2). 10
3.4.6.2.2 Launcher power indicator signal (see 4.6.1.2). 10
3.4.6.3 Voltmeter. 10
3.4.6.3.1 Launcher voltmeter signal (see 4.6.1.2). 10
3.4.6.3.2 Fire control voltmeter signal (see 4.6.1.2). 10
3.4.7 Generator system. 10
3.4.7.1 Generator field excitation. 10
3.4.7.1.1 Generator field excitation function (see 4.6.1.4.1). 10
3.4.7.2 Generator diagnostic. 10
3.4.7.2.1 Primary generator diagnostic function (see 4.6.1.7.1). 10
3.4.7.2.2 Secondary generator diagnostic function (see 4.6.1.7.2). 11
3.4.8 Starter system. 11
3.4.8.1 Starter. 11
3.4.8.1.1 Starter ground (see 4.6.1.2). 11
3.4.8.2 Starter switch. 11

Status: RELEASED
Date: 04/10/03

3.4.8.2.1 Starter switch power (see 4.6.1.3). 11
3.4.8.2.2 Starter switch signal (see 4.6.1.2). 11
3.4.8.3 Starter interrupt. 11
3.4.8.3.1 Starter interrupt function (see 4.6.1.8.1). 11
3.4.8.4 Starter cutout override switch. 11
3.4.8.4.1 Starter cutout override switch function (see 4.6.1.8.2). 11
3.4.9 Fuel system. 12
3.4.9.1 Fuel pumps. 12
3.4.9.1.1 Fuel pumps ground (see 4.6.1.2). 12
3.4.9.1.2 Fuel pumps function (see 4.6.1.4.1). 12
3.4.9.2 Fuel pump failure indicators. 12
3.4.9.2.1 Fuel pump failure indicators power(see 4.6.1.3). 12
3.4.9.2.2 Forward fuel pump failure indicator signal (see 4.6.1.22.1). 12
3.4.9.2.3 Rear fuel pump failure indicator signal (see 4.6.1.22.2). 12
3.4.9.3 Fuel level gauge. 13
3.4.9.3.1 Fuel level gauge power (see 4.6.1.3). 13
3.4.9.3.2 Fuel level gauge signal (see 4.6.1.2). 13
3.4.9.4 Fuel level sender. 13
3.4.9.4.1 Fuel level sender ground (see 4.6.1.2). 13
3.4.10 Fire suppression system. 13
3.4.10.1 Flame detection amplifier and flame detector. 13
3.4.10.1.1 Flame detection amplifier and flame detector power (see 4.6.1.3). 13
3.4.11 Radio system. 13
3.4.11.1 Receiver transceiver. 13
3.4.11.1.1 Receiver transceiver function (see 4.6.1.9.1). 13
3.4.12 Nuclear/Biological/Chemical (NBC) system. 13
3.4.12.1 Radiac. 13
3.4.12.1.1 Radiac power (see 4.6.1.3). 13
3.4.12.2 NBC detector. 13
3.4.12.2.1 NBC detector ground (see 4.6.1.2). 13
3.4.12.2.2 NBC detector power (see 4.6.1.3). 14
3.4.12.2.3 NBC detector signals (see 4.6.1.2). 14
3.4.13 Instrument panel gauges. 14
3.4.13.1 Coolant temperature gauge. 14
3.4.13.1.1 Coolant temperature gauge power (see 4.6.1.4). 14
3.4.13.1.2 Coolant temperature gauge signal (see 4.6.1.2). 14
3.4.13.2 Oil pressure gauge. 14
3.4.13.2.1 Oil pressure gauge power (see 4.6.1.4). 14
3.4.13.2.2 Oil pressure gauge signal (see 4.6.1.2). 14
3.4.13.3 Speedometer. 14
3.4.13.3.1 Speedometer(see 4.6.1.4). 14
3.4.14 Instrument panel lights. 14
3.4.14.1 Warning lights. 14
3.4.14.1.1 Warning lights power (see 4.6.1.4). 15
3.4.14.1.2 Low engine coolant light signal (see 4.6.1.2). 15
3.4.14.1.3 Engine low oil pressure light signal (see 4.6.1.2). 15
3.4.14.1.4 Engine coolant high temp light signal (see 4.6.1.2). 15
3.4.14.1.5 Transmission oil temperature light signal (see 4.6.1.2). 15
3.4.14.1.6 Transmission oil pressure light signal (see 4.6.1.2). 15
3.4.14.1.7 Fuel filter restrict light signal (see 4.6.1.2). 15
3.4.14.2 Fuel filter restrict switch. 15
3.4.14.2.1 Fuel filter restrict switch ground (see 4.6.1.2). 15
3.4.14.3 Low engine coolant switch. 15
3.4.14.3.1 Low engine coolant switch power (see 4.6.1.3). 15
3.4.14.4 Lamp test switch. 15

3.4.14.4.1 Lamp test switch signal (see 4.6.1.2). 15
3.4.14.4.2 Lamp test switch power (see 4.6.1.3). 15
3.4.15 Personnel heater system. 16
3.4.15.1 Personnel heater. 16
3.4.15.1.1 Personnel heater ground (see 4.6.1.2). 16
3.4.15.1.2 Personnel heater power (see 4.6.1.3). 16
3.4.15.1.3 Heater purge function (see 4.6.1.10.1). 16
3.4.16 Cold start system. 16
3.4.16.1 Cold start switch. 16
3.4.16.1.1 Cold start switch function (see 4.6.1.11.1). 16
3.4.16.2 Starter switch. 16
3.4.16.2.1 Starter switch ground (see 4.6.1.2). 16
3.4.16.2.2 Starter switch signal (see 4.6.1.2). 16
3.4.17 Suspension lockout system. 16
3.4.17.1 Park brake switch. 16
3.4.17.1.1 Park brake switch power (see 4.6.1.3). 16
3.4.17.1.2 Park brake switch signal (4.6.1.12.1). 17
3.4.18 Power take-off (PTO) clutch system. 17
3.4.18.1 PTO clutch. 17
3.4.18.1.1 PTO clutch engage stimulus (see 4.6.1.3). 17
3.4.18.1.2 PTO clutch function (see 4.6.1.14.1). 17
3.4.18.1.3 PTO Interrupt function (see 4.6.1.14.2). 17
3.4.18.1.4 PTO Interrupt stimulus (see 4.6.1.3). 17
3.4.18.2 PTO Clutch monitor. 17
3.4.18.2.1 PTO clutch monitor function (see 4.6.1.14.1). 17
3.4.19 Engine governor unit (EGU) system. 18
3.4.19.1 High idle engage stimulus(see 4.6.1.3). 18
3.4.19.2 EGU Power (see 4.6.1.4.1). 18
3.4.19.3 EGU Function (see 4.6.1.15.1). 18
3.4.20 Radiator fan bypass solenoid. 18
3.4.20.1 Radiator fan bypass solenoid engage stimulus(see 4.6.1.3). 18
3.4.20.2 Radiator fan bypass solenoid function (see 4.6.1.16.1). 18
3.4.20.3 Radiator fan bypass solenoid ground (see 4.6.1.2). 18
3.4.21 Data Bus. 18
3.4.21.1 Mil-STD-1553B remote terminal. 18
3.4.21.1.1 Mil-STD-1553B remote terminal function (see 4.6.1.17.1). 19
3.4.22 STE/ICE. 19
3.4.22.1 Top dead center magnetic pickup. 19
3.4.22.1.1 Top dead center magnetic pickup function (see 4.6.1.13.1). 19
3.4.22.2 STE/ICE matrices (see 4.6.1.13.2). 19
3.4.22.3 STE/ICE transducer power. 19
3.4.22.3.1 Transducer power 12 Vdc (see 4.6.1.18.1). 19
3.4.22.3.2 Transducer power 6 Vdc (see 4.6.1.18.2). 20
3.4.22.3.3 Transducer power 2.12 Vdc (see 4.6.1.18.3). 20
3.4.23 Diodes. 20
3.4.23.1 Zener diode (see 4.6.1.19.1). 20
3.4.25 Transmission in Neutral (see 4.6.1.20). 20
3.4.26 Deicer. 20
3.4.26.1 Deicer function (see 4.6.1.21). 20

3.5 Environmental conditions. 21
3.5.1 Low Temperature (see 4.6.2.1). 21
3.5.2 High Temperature (see 4.6.2.2). 21
3.5.3 Shock (see 4.6.2.3). 21
3.5.4 Vibration (see 4.6.2.4). 21

3.5.5 Humidity (see 4.6.2.5). 21
3.5.6 Steam and waterjet cleaning (see 4.6.2.6). 21
3.5.7 Fungus (see 4.6.2.7). 21
3.5.8 Salt fog (see 4.6.2.8). 22

3.6 Product marking. 22

3.7 Workmanship. 22

3.8 Safety. 22
3.8.1 Safety control. 22
3.8.2 Assembly and installation. 22
3.8.3 Materials. 22

3.9 Electromagnetic radiation (see 4.6.3) 22
3.9.1 Electromagnetic Environments (Ref MIS-35361) 22
3.9.2 Electromagnetic Interference and Compatibility (EMI/EMC) (Ref MIS-35361). 22
3.9.3 Lightning Strike (Ref MIS-35361). 23
3.9.4 Lightning-induced transient (Ref MIS-35361). 23
3.9.5 Electromagnetic Pulse Pin Transient (Ref MIS-35361). 24

3.10 Nuclear survivability (see 4.6.4) 24

4 QUALITY ASSURANCE PROVISIONS 28

4.1 Responsibility for inspection. 28
4.1.1 Responsibility for compliance. 28
4.1.2 Automatic test equipment (ATE) software. 28
4.1.2.1 ATE fault insertion. 28
4.1.2.2 Failure. 28
4.1.3 Materials and manufacturing processes. 29

4.2 Classification of inspections. 29

4.3 Inspection conditions. 29

4.4 First article inspection. 29
4.4.1 Inspection routine. 29
4.4.2 First article failure. 29
4.4.3 Retention of first article approval. 30
4.4.4 Disposition of samples. 30
4.4.5 Changes to design, processes, procedures, or location. 30

4.5 Quality conformance inspection. 30
4.5.1 Inspection of product for delivery. 30
4.5.1.1 Group A inspection. 31
4.5.1.1.1 Group A sampling. 31
4.5.2 Periodic inspection. 31
4.5.2.1 Group B sampling plan. 32
4.5.2.2 Noncompliance. 32
4.5.2.3 Disposition of group B samples. 32
4.5.3 Nonconforming parts. 32
4.5.4 Inspection of packaging. 32

4.6 Methods of inspection. 32
4.6.1 Performance tests. 32
4.6.1.1 Input voltages. 33
4.6.1.2 Continuity. 33
4.6.1.3 Master power distribution. 35
4.6.1.4 Engine on function. 35
4.6.1.4.1 Engine on function. 35
4.6.1.5 Slave power. 35
4.6.1.5.1 Slave power function. 35
4.6.1.5.2 Normal polarity indicator light function. 36
4.6.1.5.3 Reverse polarity indicator light function. 36
4.6.1.6 Launcher and fire control power. 36
4.6.1.6.1 Launcher power switch function. 36
4.6.1.7 Generator system. 36
4.6.1.7.1 Primary generator diagnostic function. 36
4.6.1.7.2 Secondary generator diagnostic function. 37
4.6.1.8 Starter system. 37
4.6.1.8.1 Starter interrupt function. 37
4.6.1.8.2 Starter cutout override switch function 38
4.6.1.9 Radio system. 38
4.6.1.9.1 Receiver transceiver function. 38
4.6.1.10 Personnel heater system. 38
4.6.1.10.1 Heater purge function. 38
4.6.1.11 Cold start system. 38
4.6.1.11.1 Cold start switch function. 38
4.6.1.12 Suspension lockout switch. 39
4.6.1.12.1 Park brake switch signal. 39
4.6.1.13 STE/ICE. 39
4.6.1.13.1 Top dead center magnetic pickup function. 39
4.6.1.13.2 STE/ICE matrices. 39
4.6.1.14 Power take-off system. 39
4.6.1.14.1 PTO function. 39
4.6.1.14.2 PTO Interrupt function. 40
4.6.1.15 Engine governor unit (EGU) system. 40
4.6.1.15.1 EGU function. 40
4.6.1.16 Radiator fan system. 41
4.6.1.16.1 Radiator fan function. 41
4.6.1.17 MIL-STD-1553B data bus. 41
4.6.1.17.1 MIL-STD-1553B remote terminal. 41
4.6.1.18 STE/ICE Transducer Power. 42
4.6.1.18.1 Transducer Power 12 Vdc. 42
4.6.1.18.2 Transducer Power 6 Vdc. 42
4.6.1.18.3 Transducer Power 2.12 Vdc. 42
4.6.1.19 Diodes. 42
4.6.1.19.1 Zener diode. 42
4.6.1.20 Transmission in neutral. 43
4.6.1.21 Deicer system. 43
4.6.1.21.1 Deicer Gen 1 function. 43
4.6.1.21.2 Deicer Gen 2 function. 43
4.6.1.22 Fuel pump failure indicators. 44
4.6.1.22.1 Forward fuel pump failure indicator signal. 44
4.6.1.22.2 Rear fuel pump failure indicator signal. 44
4.6.2 Environmental tests. 45
4.6.2.1 Low temperature. 45
4.6.2.2 High temperature. 45

4.6.2.3 Shock. 45
4.6.2.4 Vibration. 45
4.6.2.5 Humidity. 45
4.6.2.6 Steam and waterjet cleaning. 45
4.6.2.7 Fungus . 46
4.6.2.7.1 Optional method. 46
4.6.2.8 Salt Fog. 46
4.6.2.8.1 Optional method. 46
4.6.3 Electromagnetic radiation 46
4.6.4 Nuclear survivability. 46

5. PACKAGING 46

5.1 Preservation, packing and marking. 46

6. NOTES 46

6.1 Intended use. 46

6.2 Acquisition requirements. 46

6.3 First article. 47

6.4 Definitions. 47
6.4.1 Improved Electrical Distribution Box. 47
6.4.2 Environmental stress screening. 47
6.4.3 Damage and deformation. 47

6.5 Note to 4.6.2.1 Low Temperature. 48

6.6 Note to 4.6.2.2 High Temperature. 48

6.7 Note to 4.6.2.4 Vibration. 48

APPENDIX FAULT INSERTION 49

10. SCOPE. 49

10.1 Scope. 49

20. APPLICABLE DOCUMENTS. 49

30. REQUIREMENTS. 49

30.1 Fault conditions. 49

30.2 Fault determination/derivation. 49

APPENDIX B ELECTRICAL TESTS. 50

TABLE OF TABLES

Table I. Input voltages. 7
Table II. STE/ICE support. 19
Table III. EMRO Environments 22
Table IV. Lightning Induced Near-Field 23
Table V. Longitudinal Axis Vibration. 25
Table VI. Transverse Axis Vibration. 26
Table VII. Vertical Axis Vibration. 27
Table VIII. First article inspection. 30
Table IX. Group A inspection. 31
Table X. Group B inspection. 32
Table XI. Continuity. 33

Table A - 1. Fault conditions. 49

Table B - 1. Electrical Tests 50

TABLE OF FIGURES

Figure 1. IEDB architecture 2
Figure 2. EMP peak voltage and current versus frequency 24

1. SCOPE

1.1 Scope.

This specification establishes the performance, test, manufacture, and acceptance requirements for the Improved Electrical Distribution Box, as shown on Drawing 19207-12463100, referred to herein as the IEDB (see 6.4.1).

1.2 Functional overview.

The IEDB distributes power and/or controls logic for the following subsystems in the MLRS vehicle.

a. Master power
b. Engine on
c. Slave
d. Exterior lighting
e. Launcher power
f. Charging and starting
g. Fuel
h. Fire suppression
i. Radios
j. NBC
k. Instrument panel gauges and lights
l. Personnel heater
m. Cold start
n. Suspension lockout
o. Power take off (PTO) clutch
p. Engine governor unit (EGU)
q. Radiator fan bypass solenoid
r. Serial data bus
s. STE/ICE
t. Deicer

1.3 Architectural overview

The IEDB architecture is depicted in Figure 1.

Status: RELEASED
Date: 04/10/03

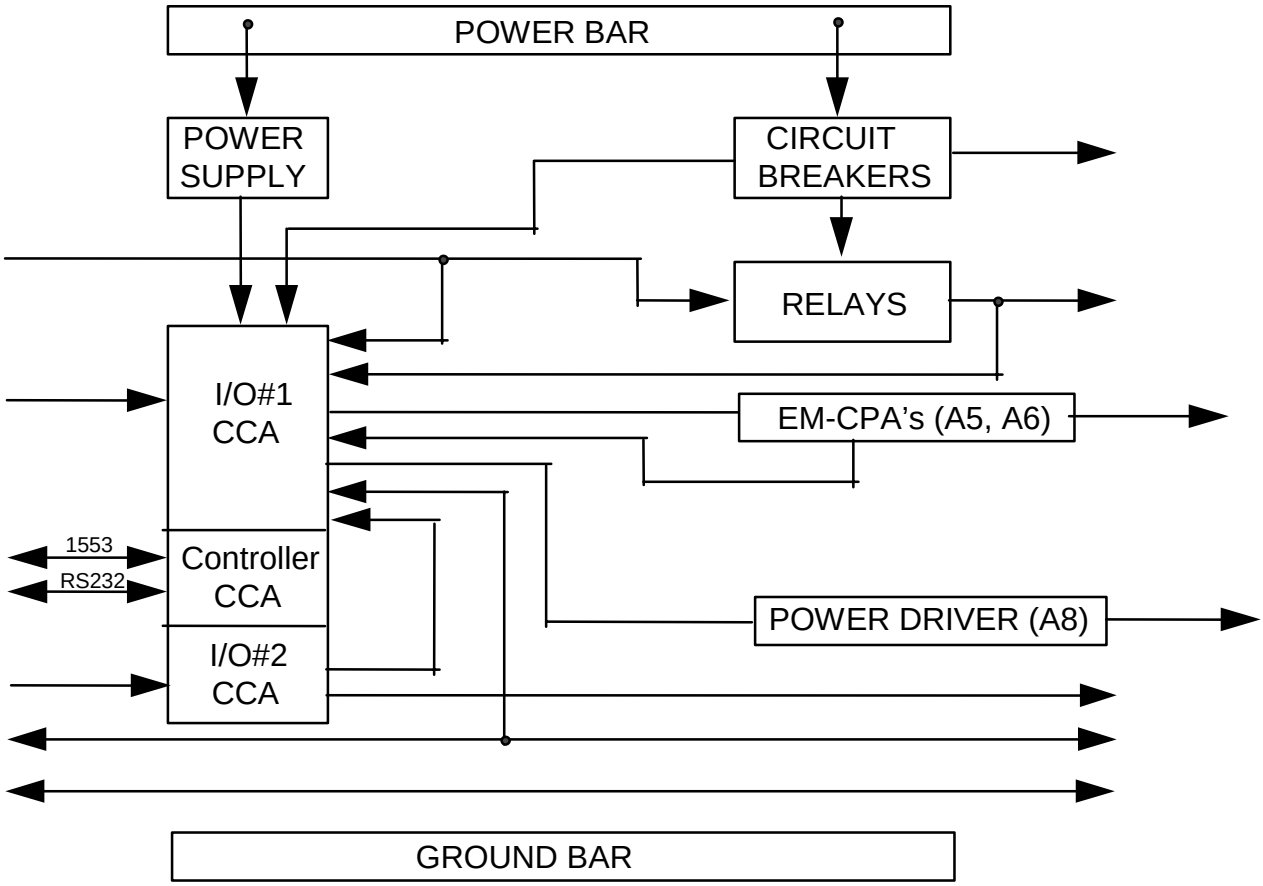

Figure 1. IEDB architecture

1.4 Major subassemblies/subsections.

The major subassemblies of the IEDB are as follows.

Controller Circuit Card Assembly, reference drawing 19207-12469832

Input/Output #1Circuit Card Assembly, reference drawing 19207-12469836

Input/Output #2 Circuit Card Assembly, reference drawing 19207-12469840

Electro-Mechanical Circuit Protection Assembly, reference drawing 19207-12488167

Power Supply, reference drawing 19200-12991977

Circuit Breaker Assembly, reference drawing 19207-12463104

Relay Assembly, reference drawing 19207-12463103

Power Driver (A8) Assembly, reference drawing 19207-12462820

2. APPLICABLE DOCUMENTS

2.1 Government documents.

2.1.1 Specifications, standards and handbooks.

The following specifications, standards and handbooks form a part of this document to the extent specified herein. Unless otherwise specified, the issues of these documents are those listed in the issue of the Department of Defense Index of Specifications and Standards (DODISS) and supplement thereto, cited in the solicitation (see 6.2).

SPECIFICATIONS

Federal

A-A 59133 - Cleaning Compound, High Pressure (Steam) Cleaner.

Military

MIL-E-17555 - Electronic and Electrical Equipment Accessories, and Provisional Items (Repair Parts): Packaging of.

MIL-E-6051 - Electromagnetic Compatibility Requirements, System.

MIS-35361 - Performance Specification, Improved Launcher Mechanical System.

MIS-30225 - Specification, Nuclear Environment Levels.

ANSI / IPC

IPC J-STD-001A-1995 - Requirements for Soldered Electrical and Electronic Assemblies

ANSI/IPC A-610B-1995 - Acceptability of Printed Board Assemblies

IPC CM-770C-1987 - Printed Board Component Mounting, Guidelines for

STANDARDS

Military

MIL-STD-461C	-	Electromagnetic Interference Characteristics Requirements for Equipment, Subsystems and Systems.
MIL-STD-462	-	Electromagnetic Interference Characteristics, Measurement of.
MIL-STD-810E	-	Environmental Test Methods and Engineering Guidelines.
MIL-STD-1275A	-	Characteristics of 28 Volt DC Electrical Systems in Military Vehicles.

(Unless otherwise indicated, copies of federal and military specifications, standards, and handbooks are available from the Naval Publications and Forms Center, (ATTN: NPODS), 5801 Tabor Avenue, Philadelphia, PA 19120-5099.)

2.1.2 Other Government documents, drawings, and publications.

The following other Government documents, drawings, and publications form a part of this document to the extent specified herein. Unless otherwise specified, the issues are those cited in the solicitation.

DRAWINGS

Army

19207-12463100	-	Improved Electrical Distribution Box
MIS-35361	-	EMI/EMC Requirements Section
MIS-30225	-	Nuclear Requirements

(Copies of specifications, standards, handbooks, drawings and publications required by manufacturers in connection with specific acquisition functions should be obtained from the contracting activity or as directed by the contracting officer.)

2.2 Order of precedence.

In the event of a conflict between the text of this document and the references cited herein the text of this document takes precedence. Nothing in this document, however, supersedes applicable laws and regulations unless a specific exemption has been obtained.

3. REQUIREMENTS

3.1 First article.

When specified (see 6.3), the IEDB shall be subjected to first article inspection (see 4.4) to demonstrate the adequacy and suitability of the contractor's processes and procedures in achieving the performance inherent in the design.

3.2 Materials.

Materials shall be in accordance with the drawings, parts lists, and other documents specified on Drawing 19207-12463100. All materials selected shall be uniform in quality and free from defects that would be considered unacceptable in the consumer market for a comparable commercial product.

3.3 Design and construction.

Components and subassemblies shall be fabricated and assembled into a complete IEDB in accordance with drawings and specifications listed or referred to on Drawing 19207-12463100.

3.3.1 Weight.

The weight of the IEDB shall not exceed 75 pounds.

3.3.2 Dimensions.

Dimensions shall be in accordance with Drawing 19207-12463100.

3.3.3 Soldering.

Soldering shall be in accordance with IPC J-STD-001A-1995. Acceptance of soldered assemblies shall be in accordance with ANSI/IPC A-610B-1995 and IPC CM-770C-1987.

3.3.4 Environmental stress screening (ESS).

Unless otherwise specified, the IEDB shall be subjected to ESS in accordance with assembly drawing 19207-12463100.

3.3.5 Reliability.

The Mean Time Between Failure (MTBF) for the IEDB shall be greater than 2153 hours.

3.3.6 Maintainability

Maintainability of the IEDB shall be as follows: The IEDB shall be removed and installed at the Organizational level. The IEDB shall be repaired at Direct Support level. The Mean Time To Repair (MTTR) for the IEDB shall be 1.25 hours.

3.3.7 Spares.

3.3.7.1 Functional integration.

The available spares shall be capable of being functionally integrated into the existing operation of the Input/Output (I/O) logic and/or in an entirely new operation of the I/O logic.

3.3.7.2 I/O interface.

The spare I/O interface shall be at dedicated receptacles located on the IEDB external wall.

3.3.7.3 Discrete inputs.

a. The spare I/O shall consist of at least 12 independent discrete inputs, accepting 28V/Open signals.
b. The spare I/O shall consist of at least 4 independent discrete inputs, accepting Ground/Open signals.

3.3.7.4 Multiplexed analog inputs.

a. The spare I/O shall consist of at least 3 independent single-end analog inputs. One accepting within - 10 to + 32 V, and two accepting 0 to 32 V.
b. The spare I/O shall consist of at least 3 independent differential analog inputs. Two accepting within - 10 to + 32 V, and one accepting - 100 to + 100 mV.

3.3.7.5 Discrete outputs.

a. The spare I/O shall consist of at least 4 independent outputs, providing a value of 28V/Open.
b. The spare I/O shall consist of at least 2 independent outputs, providing a value of Ground/ Open.

3.3.7.6 Circuit card expansion.

The IEDB shall provide space for mounting an additional card.

3.3.7.7 Memory.

a. The IEDB shall provide at least 50% reserve electrical erasable programmable read only memory (EEPROM).
b. The IEDB shall have at least 50% reserve random access memory (RAM).

3.3.8 Serial Data Bus Interface.

3.3.8.1 Serial Data Bus Standards.

Serial data bus interface shall comply with the following standards.

a. EIA/TIA STANDARD (EIA/TIA-232-E)
b. EIA/TIA STANDARD (RS-422-A)
c. EIA/TIA STANDARD (RS-485)

3.3.8.2 Serial Data Bus Interfaces.

The IEDB shall provide the appropriate hardware for four serial communication channels. These serial channels shall be configured as follows:

3.3.8.2.1 Channel A.

Channel “A” shall be a RS232 channel at J18-11 (TXD), J18-12 (RXD) and J18-13 (GND).

3.3.8.2.2 Channel B.

Channel “B” shall be a RS422 channel at J18-6 (RXDA+), J18-7 (RXDA-), J18-8 (GND), J18-9 (TXDA+) and J18-10 (TXDA-).

3.3.8.2.3 Channel C (Reserved).

Channel "C" shall be an internal RS485 channel reserved for future utilization.

3.3.8.2.4 Channel D.

Channel “D” shall be a RS232 channel at J19-C (TXD), J19-D (RXD) and J19-E (GND). Channel “D” shall under program control have the logic for a internal loop back test mode.

3.3.9 STE/ICE TK mode transducer interface.

The IEDB shall provide an interface connector to accept eight differential analog inputs.

3.3.10 (Reserved).

3.4 Performance requirements.

3.4.1 Input voltages (see 4.6.1.1).

NOTES:
1. Unless otherwise specified, all voltages indicated are positive relative to ground
2. Unless otherwise specified, all resistor tolerances shall be not greater than ± 10 percent.
3. Continuity is herein defined as resistance less than 1 ohm. Discontinuity is herein defined as resistance greater than 1 megohm.
4. Master power ON is herein defined as 28 Vdc power applied to J2-A, primary power, and ground applied to J12-E, primary ground.
5. The IEDB shall operate from the input voltages specified in Table I

Table I. Input voltages.

Voltage	Pin(s)
+ 28.0 (18.0 to 30.0) Vdc (herein defined as 28 Vdc source)	as specified
Ground	as specified

3.4.2 Master power.

3.4.2.1 Master power switch.

3.4.2.1.1 Master power switch ground (see 4.6.1.2).

The IEDB shall provide continuity from pin J12-E, primary ground, to pin J8-L, master power switch.

3.4.2.1.2 Master power switch signal (see 4.6.1.2).

The IEDB shall provide continuity from pin J8-V, master power switch, to pin J12-J, master power relay coil.

3.4.2.2 Master power indicator.

3.4.2.2.1 Master power indicator ground (see 4.6.1.2).

The IEDB shall provide continuity from pin J12-E, primary ground, to pin J8-L, master power indicator.

3.4.2.2.2 Master power indicator function (see 4.6.1.3).

The IEDB shall provide 28 Vdc power to pin J8-M, master power indicator LED, when master power is ON.

3.4.2.3 Voltmeter.

3.4.2.3.1 Voltmeter function (see 4.6.1.3).

The IEDB shall provide 28 Vdc power to pin J7-K, battery voltmeter, when master power is ON.

3.4.2.4 Cab distribution box (CDB).

3.4.2.4.1 CDB (A1-E3) ground (4.6.1.2).

The IEDB shall provide continuity from pin J12-E, primary ground, to pin J7-u, CDB (A1-E3).

3.4.3 Engine on.

3.4.3.1 Engine on switch ground (see 4.6.1.2)

The IEDB shall provide continuity from pin J12-E, primary ground, to pin J8-a, Engine on switch.

3.4.3.2 Engine on function (see 4.6.1.4.1).

The IEDB shall provide 28 Vdc power to pins:

J4-F - primary generator field excitation
J7-U - instrument panel gauges/warning indicators
J9-E - secondary generator field excitation
J3-X - forward fuel pump
J3-V - rear fuel pump
J19-H, c - EGU power
when the following conditions are met;

a. Master power ON
b. Pin J8-P, Engine on switch, is grounded.

3.4.4 Slave power.

3.4.4.1 Slave receptacle.

3.4.4.1.1 Slave ground (see 4.6.1.2).

The IEDB shall provide continuity from chassis, to pin J5(-), slave ground.

3.4.4.1.2 Slave power function(see 4.6.1.5.1).

a. The IEDB shall provide 28 Vdc power to pin J5(+), slave power, when the following conditions are met;
    1. Master power ON
    2. Slave power switch is depressed
b. The IEDB shall provide 28 Vdc power to pin J2-A, primary power, when pin J5(+), slave power, is connected to 28 Vdc source and J5 (-), slave ground, is grounded.
c. The IEDB shall provide open to pin J2-A, primary power, when pin J5 (+), slave power, is connected to ground and J5 (-), slave ground, is connected to 28 Vdc source.

3.4.4.2 Polarity indicator.

3.4.4.2.1 Normal polarity indicator light function (see 4.6.1.5.2).

The IEDB shall have a polarity indicator light, the green indicator light shall be illuminated when either of the following conditions exist:

a. 28 Vdc source is applied to J5(+), slave power, and ground is applied to J5(-), slave ground.
b. Master power ON and the slave power switch is depressed.

3.4.4.2.2 Reverse polarity indicator light function (see 4.6.1.5.3).

The IEDB shall illuminate the red indicator light when pin J5(+), slave receptacle power, is grounded and J5 (-), slave ground, is connected to 28 Vdc source.

3.4.5 Utilities/Lighting.

3.4.5.1 Lighting.

3.4.5.1.1 Lighting ground (see 4.6.1.2).

The IEDB shall provide continuity from pin J12-E, primary ground, to pin J3-R, lighting ground.

3.4.5.1.2 Blackout (B. O.) markers signal (see 4.6.1.2).

The IEDB shall provide continuity from pin J7-Z, B.O. marker switch, to pin J3-P, B.O. marker lights, and pin J3-E, trailer receptacle.

3.4.5.1.3 B. O. stoplights signal (see 4.6.1.2).

The IEDB shall provide continuity from pin J7-P, B.O. stoplight switch, to pin J3-N, B.O. stoplights, and pin J3-J, trailer receptacle.

3.4.5.1.4 Service tail lights signal (see 4.6.1.2).

The IEDB shall provide continuity from pin J7-L, B.O. service tail light switch, to pin J3-M, service tail lights, and pin J3-H, trailer receptacle.

3.4.5.1.5 Panel light signal (see 4.6.1.2).

The IEDB shall provide continuity from pin J7-X, panel light switch, to pin J8-X, panel light.

3.4.5.1.6 Left turn stoplight signal (see 4.6.1.2).

The IEDB shall provide continuity from pin J7-I, left turn stoplight switch, to pin J3-D, left turn stoplight, and pin J3-F, trailer receptacle.

3.4.5.1.7 Right turn stoplight signal (see 4.6.1.2).

The IEDB shall provide continuity from pin J7-R, right turn stoplight switch , to pin J3-C, right turn stoplight, and pin J3-G, trailer receptacle.

3.4.5.2 Trailer receptacle.

3.4.5.2.1 Trailer receptacle power (see 4.6.1.3).

The IEDB shall provide 28 Vdc to pin J3-K, trailer receptacle power, when master power is ON.

3.4.5.2.2 Trailer receptacle ground (see 4.6.1.2).

The IEDB shall provide continuity from pin J12-E, primary ground, to pin J3-L, trailer receptacle.

3.4.6 Launcher and fire control power.

3.4.6.1 Launcher power switch.

3.4.6.1.1 Launcher power switch ground (see 4.6.1.2).

The IEDB shall provide continuity from pin J12-E, primary ground, to pin J8-b, launcher power switch.

3.4.6.1.2 Launcher power switch function (see 4.6.1.6.1).

The IEDB shall provide ground to pin J12-F, launcher power relay coil, when following conditions are met:

a. Master power ON
b . Pin J8-Z, launcher power switch, is grounded

3.4.6.2 Launcher power indicator.

3.4.6.2.1 Launcher power indicator power (see 4.6.1.2).

The IEDB shall provide continuity from pin J12-K, master power, to pin J8-R, launcher power indicator LED.

3.4.6.2.2 Launcher power indicator signal (see 4.6.1.2).

The IEDB shall provide continuity from pin J7-a, lamp test switch, to pin J8-W, launcher power indicator.

3.4.6.3 Voltmeter.

3.4.6.3.1 Launcher voltmeter signal (see 4.6.1.2).

The IEDB shall provide continuity from J1-C, launcher receptacle, to pin J7-y, voltmeter.

3.4.6.3.2 Fire control voltmeter signal (see 4.6.1.2).

The IEDB shall provide continuity from J1-B, fire control receptacle, to pin J7-v, voltmeter.

3.4.7 Generator system.

3.4.7.1 Generator field excitation.

3.4.7.1.1 Generator field excitation function (see 4.6.1.4.1).

The IEDB shall provide 28 Vdc power to pins:

J4-F -primary generator field excitation
J9-E -secondary generator field excitation

when the following conditions are met;

a. Master power ON
b. Pin J8-P, Engine on switch, is grounded.

3.4.7.2 Generator diagnostic.

3.4.7.2.1 Primary generator diagnostic function (see 4.6.1.7.1).

The IEDB shall connect pin J7-w, primary generator warning LED, to ground through a 5.1 volt ±10 % zener diode when the following conditions are met:

a. Master power is ON
b. Pin J8-P, Engine on switch, is grounded.
c. Pin J9-A or pin J9-B, primary generator diagnostic, is connected to a less than 9 Vdc.
d. Pin J9-DD, primary generator alt. diagnostic, is connected to a less than 9 Vdc.

3.4.7.2.2 Secondary generator diagnostic function (see 4.6.1.7.2).

The IEDB shall connect pin J7-z, secondary generator warning LED, to ground through a 5.1 volt ±10 % zener diode when the following conditions are met:

a. Master power is ON
b. Pin J8-P, Engine on switch, is grounded.
c. Pin J9-C or pin J9-D, secondary generator diagnostic, is connected to less than 9 Vdc.
d. Pin J9-H, secondary generator alt. diagnostic, is connected to less than 9 Vdc.

3.4.8 Starter system.

3.4.8.1 Starter.

3.4.8.1.1 Starter ground (see 4.6.1.2)

The IEDB shall provide continuity from pin J12-E, primary ground, to pin J9-v, starter assembly.

3.4.8.2 Starter switch.

3.4.8.2.1 Starter switch power (see 4.6.1.3).

The IEDB shall provide 28 vdc power to pin J8-D, starter switch when Master Power is ON..

3.4.8.2.2 Starter switch signal (see 4.6.1.2).

The IEDB shall provide continuity from pin J8-H, starter switch, to pin J4-K, starter relay coil.

3.4.8.3 Starter interrupt.

3.4.8.3.1 Starter interrupt function (see 4.6.1.8.1).

a. The IEDB shall provide ground to pin J4-L, starter relay, when the following conditions are met;
    1. Master power is ON
    2. Input across pins J4-B and J4-A, starter int. magnetic pick-up, is connected to a 1.5 ± 0.5 volt, peak- to-peak, AC signal with frequency less than 600 Hz.
b. The IEDB shall provide Open to pin J4-L, starter relay, when the following conditions are met:
    1. Master power is ON
    2. Input across pins J4-B and J4-A, starter int. magnetic pick-up, is connected to a 1200 ± 100 Hz, 1.5 ± 0.5 volt, peak-to-peak, AC signal.

3.4.8.4 Starter cutout override switch.

3.4.8.4.1 Starter cutout override switch function (see 4.6.1.8.2).

The IEDB shall provide ground to pin J4-L, starter relay, when the following conditions are met;

a. Master power is ON.
b. Pin J7-e, starter cutout override switch, is grounded.
c. Input across pins J4-B and J4-A, starter int. magnetic pick-up, is connected to a 1.5 ± 0.5 volt, peak-to-peak, AC signal with frequency less than 600 Hz.

3.4.9 Fuel system.

3.4.9.1 Fuel pumps.

3.4.9.1.1 Fuel pumps ground (see 4.6.1.2).

The IEDB shall provide continuity from pin J12-E, primary ground, to pin J3-W, rear fuel pump, and J3-U, forward fuel pump.

3.4.9.1.2 Fuel pumps function (see 4.6.1.4.1).

a. The IEDB shall provide 28 Vdc power to pin J3-V, rear fuel pump, and pin J3-X, forward fuel pump when the following conditions are met;
    1. Master power ON
    2. Pin J8-P, Engine on switch, grounded
b. The IEDB shall provide isolated current protection to the fuel pumps.

3.4.9.2 Fuel pump failure indicators.

3.4.9.2.1 Fuel pump failure indicators power(see 4.6.1.3).

The IEDB shall provide 28 vdc power, to pin J7-p, rear and forward indicators when Master Power is ON.

3.4.9.2.2 Forward fuel pump failure indicator signal (see 4.6.1.22.1).

a. The IEDB shall provide an open to pin J7-m, forward fuel pump light, when the following conditions are met;
    1. Master power is ON
    2. Pin J8-P, Engine on switch, is grounded.
b. The IEDB shall connect pin J7-m, forward fuel pump light, to ground through a 5.1 volt ±10 % zener diode when the following conditions are met:
    1. Master power is ON
    2. Pin J8-P, Engine on switch, is grounded.
    3. Forward fuel pump failure.

3.4.9.2.3 Rear fuel pump failure indicator signal (see 4.6.1.22.2).

a. The IEDB shall provide an open to pin J7-n, rear fuel pump light, when the following conditions are met:
    1. Master power is ON
    2. Pin J8-P, Engine on switch, is grounded.
b. The IEDB shall connect pin J7-n, rear fuel pump light, to ground through a 5.1 volt ±10 % zener diode when the following conditions are met:
    1. Master power is ON
    2. Pin J8-P, Engine on switch, is grounded.
    3. Rear fuel pump failure.

3.4.9.3 Fuel level gauge.

3.4.9.3.1 Fuel level gauge power (see 4.6.1.3).

The IEDB shall provide 28 Vdc power to pin J7-K, fuel level gauge, when master power in ON.

3.4.9.3.2 Fuel level gauge signal (see 4.6.1.2).

The IEDB shall provide continuity from J3-T, fuel level sender, to pin J6-a, fuel level gauge.

3.4.9.4 Fuel level sender.

3.4.9.4.1 Fuel level sender ground (see 4.6.1.2).

The IEDB shall provide continuity from J12-E, primary ground, to pin J3-S, fuel level sender.

3.4.10 Fire suppression system.

3.4.10.1 Flame detection amplifier and flame detector.

3.4.10.1.1 Flame detection amplifier and flame detector power (see 4.6.1.3).

The IEDB shall provide 28 Vdc power to pin J7-k, flame detection amplifier and flame detector when master power is ON.

3.4.11 Radio system.

3.4.11.1 Receiver transceiver.

3.4.11.1.1 Receiver transceiver function (see 4.6.1.9.1).

a. The IEDB shall provide 28 Vdc power to pin J7-x, receiver transceiver when the following conditions are met;
    1. Master power ON.
    2. Pin J4-k, radio interlock, is grounded or open.
b. The IEDB shall provide open to pin J7-x, receiver transceiver when the following conditions are met;
    1. Master power ON.
    2. Pin J4-k, radio interlock, is connected to 28 Vdc.

3.4.12 Nuclear/Biological/Chemical (NBC) system.

3.4.12.1 Radiac.

3.4.12.1.1 Radiac power (see 4.6.1.3).

The IEDB shall provide 28 Vdc to J7-J, radiac, when master power in ON.

3.4.12.2 NBC detector.

3.4.12.2.1 NBC detector ground (see 4.6.1.2).

The IEDB shall provide continuity from pin J12-E, primary ground, to pin J8-N, NBC Detector.

3.4.12.2.2 NBC detector power (see 4.6.1.3).

The IEDB shall provide 28 Vdc to pin J8-E, NBC Detector, when master power is ON.

3.4.12.2.3 NBC detector signals (see 4.6.1.2).

a. The IEDB shall provide continuity from pin J8-C, NBC detector, to pin J7-N, NBC alarm.
b. The IEDB shall provide continuity from pin J8-B, NBC detector, to pin J7-O, NBC alarm.

3.4.13 Instrument panel gauges.

3.4.13.1 Coolant temperature gauge.

3.4.13.1.1 Coolant temperature gauge power (see 4.6.1.4).

The IEDB shall provide 28 Vdc power to pin J7-U, instrument panel gauges/warning indicators, when the following conditions are met:

a. Master power is ON.
b. Pin J8-P, Engine on switch, is grounded.

3.4.13.1.2 Coolant temperature gauge signal (see 4.6.1.2).

The IEDB shall provide continuity from pin J4-d, engine coolant temperature sender, to pin J6-V, coolant temperature gauge.

3.4.13.2 Oil pressure gauge.

3.4.13.2.1 Oil pressure gauge power (see 4.6.1.4).

The IEDB shall provide 28 Vdc power to pin J7-U, instrument panel gauges/warning indicators, when the following conditions are met;

a. Master power is ON.
b. Pin J8-P, Engine on switch, is grounded.

3.4.13.2.2 Oil pressure gauge signal (see 4.6.1.2).

The IEDB shall provide continuity from pin J4-e, engine oil pressure sender, to pin J6-X, oil pressure gauge.

3.4.13.3 Speedometer.

3.4.13.3.1 Speedometer(see 4.6.1.4).

The IEDB shall provide 28 Vdc power to pin J7-U, instrument panel gauges/warning indicators, when the following conditions are met:

a. Master power is ON.
b. Pin J8-P, Engine on switch, is grounded.

3.4.14 Instrument panel lights.

3.4.14.1 Warning lights.

3.4.14.1.1 Warning lights power (see 4.6.1.4).

The IEDB shall provide 28 Vdc power to J7-U, instrument panel gauges/warning indicators, when the following conditions are met;

a. Master power is ON.
b. Pin J8-P, Engine on switch, is grounded.

3.4.14.1.2 Low engine coolant light signal (see 4.6.1.2).

The IEDB shall provide continuity from pin J4-c, low engine coolant switch, to pin J6-W, low engine coolant light.

3.4.14.1.3 Engine low oil pressure light signal (see 4.6.1.2).

The IEDB shall provide continuity from pin J4-Y, engine low oil pressure switch, to pin J6-T, engine low oil pressure light.

3.4.14.1.4 Engine coolant high temp light signal (see 4.6.1.2).

The IEDB shall provide continuity from pin J4-J, engine coolant high temp switch, to pin J6-U, engine coolant high temp light.

3.4.14.1.5 Transmission oil temperature light signal (see 4.6.1.2).

The IEDB shall provide continuity from pin J4-E, transmission oil temperature switch, to pin J6-d, transmission oil temperature light.

3.4.14.1.6 Transmission oil pressure light signal (see 4.6.1.2).

The IEDB shall provide continuity from pin J4-D, transmission oil pressure switch, to pin J6-c, transmission oil pressure light.

3.4.14.1.7 Fuel filter restrict light signal (see 4.6.1.2).

The IEDB shall provide continuity from pin J4-I, fuel filter restrict switch, to pin J6-Z, fuel filter restrict light.

3.4.14.2 Fuel filter restrict switch.

3.4.14.2.1 Fuel filter restrict switch ground (see 4.6.1.2).

The IEDB shall provide continuity from pin J12-E, primary ground, to pin J4-g, fuel filter restrict switch ground.

3.4.14.3 Low engine coolant switch.

3.4.14.3.1 Low engine coolant switch power (see 4.6.1.3).

The IEDB shall provide 28 Vdc to pin J4-h, low engine coolant switch, when master power is ON.

3.4.14.4 Lamp test switch.

3.4.14.4.1 Lamp test switch signal (see 4.6.1.2).

The IEDB shall provide continuity from pin J6-B, lamp test switch, to pin J4-f, low engine coolant switch.

3.4.14.4.2 Lamp test switch power (see 4.6.1.3).

The IEDB shall provide 28 Vdc power to pin J7-G, lamp test switch, when master power is ON.

3.4.15 Personnel heater system.

3.4.15.1 Personnel heater.

3.4.15.1.1 Personnel heater ground (see 4.6.1.2).

The IEDB shall provide continuity from pin J12-E, primary ground, to pin J13-B, personnel heater ground.

3.4.15.1.2 Personnel heater power (see 4.6.1.3).

The IEDB shall provide 28 Vdc power to the following pins when master power is ON:

J13-D -personnel heater power.
J6-G -heater switch.

3.4.15.1.3 Heater purge function (see 4.6.1.10.1).

The IEDB shall provide 28 Vdc to pin J6-E, personnel heater purge, when the following conditions are met:

1. Pin J12-G, vehicle batteries, is connected to a 28 Vdc source
2. Pin J6-F, personnel heater purge request, is grounded.

3.4.16 Cold start system.

3.4.16.1 Cold start switch.

3.4.16.1.1 Cold start switch function (see 4.6.1.11.1).

The IEDB shall provide 28 Vdc power to the following pins;

J7-f -cold start light.
J4-T -glow plug and cold start fuel pump relay.
J4-S -glow plug.

when the following conditions are met;

a. Master power ON
b. Pin J8-P, Engine on switch, is grounded.
c. Pin J7-W, cold start switch, is grounded.

3.4.16.2 Starter switch.

3.4.16.2.1 Starter switch ground (see 4.6.1.2).

The IEDB shall provide continuity from pin J12-E, primary ground, to pin J8-S, cold start starter switch ground.

3.4.16.2.2 Starter switch signal (see 4.6.1.2).

The IEDB shall provide continuity from pin J8-I, starter switch, to pin J4-X, cold start fuel pump relay.

3.4.17 Suspension lockout system.

3.4.17.1 Park brake switch.

3.4.17.1.1 Park brake switch power (see 4.6.1.3).

The IEDB shall provide 28 Vdc power to pin J4-N, park brake switch, when master power is ON.

3.4.17.1.2 Park brake switch signal (4.6.1.12.1).

The IEDB shall provide 28 Vdc power to pin J7-b, lockout switch, when master power is ON and pin J4-G, park brake switch, is connected to 28 Vdc source.

3.4.18 Power take-off (PTO) clutch system.

3.4.18.1 PTO clutch.

3.4.18.1.1 PTO clutch engage stimulus (see 4.6.1.3).

The IEDB shall provide 28 Vdc power to pin J14-B, PTO clutch engage stimulus, when master power is ON. The maximum short circuit current shall not exceed 750 mA.

3.4.18.1.2 PTO clutch function (see 4.6.1.14.1).

a. The IEDB shall provide 28 Vdc power to pin J19-K, PTO clutch, and ground to pin J19-L, PTO clutch ground, when the following conditions are met:
    1. Master power is ON and Pin J8-P, Engine ON switch, is grounded.
    2. Pin J14-A, PTO clutch engage request, is connected to a 28 Vdc source.
    3. Pin J4-G, park brake switch, is connected to a 28 Vdc source.
    4. Input across pins J19-A and J19-B will be the transmission in neutral signal See 3.4.25).
    5. Input across pins J4-B and J4-A, starter int. magnetic pick-up, is connected to a 1.5 ± 0.5 volt, peak-to-peak, AC signal with a frequency greater than 800 Hz (400 rpm) and less than 1900 Hz (950 rpm).
    6. The PTO Interrupt function is not active (see 3.4.18.1.3).

b. Once the PTO is engaged, it shall remained engaged as long as the AC signal between J4-B and J4-A has a frequency greater than 800 Hz (400 rpm) and less than 3000 Hz (1500 rpm) and the conditions of steps 2, 3, 4 and 6 above are maintained.

c. The IEDB shall lockout (disable) the PTO clutch when the PTO clutch engage request signal is 28 Vdc and any of the four interlock conditions (see 3.4.18.1.2 steps 3, 4, 5 and 6) are not met. The IEDB shall not allow the PTO clutch to be activated until all four interlock conditions (see 3.4.18.1.2 steps 3, 4, 5 and 6) are met and the PTO clutch engage request has been reset.

d. The IEDB shall not engage the PTO when the EGU is in HIGH IDLE. If the IEDB receives a PTO request and the EGU is engaged, the IEDB shall de-activate the EGU until the RPM engage interlock is valid, engage the PTO, then re-activate the EGU.

3.4.18.1.3 PTO Interrupt function (see 4.6.1.14.2).

The IEDB shall disengage and lockout (disable) the PTO clutch function (see 3.4.18.1.2) when the PTO Interrupt function is active. The PTO Interrupt function is activated by the application of +28 Vdc from a isolated power source to pin J14-G, PTO Interrupt, with the power source return connected to pin J14-F, PTO Interrupt Return.

3.4.18.1.4 PTO Interrupt stimulus (see 4.6.1.3).

The IEDB shall provide 28 Vdc to J14-V, PTO Interrupt stimulus, when master power is ON.3.4.18.2 PTO Clutch monitor.

3.4.18.2.1 PTO clutch monitor function (see 4.6.1.14.1).

The IEDB shall provide an isolated signal path from pin J14-N, PTO monitor stimulus, to pin J14-M, PTO clutch monitor status, when 28 Vdc is applied to the PTO clutch.

3.4.19 Engine governor unit (EGU) system.

3.4.19.1 High idle engage stimulus(see 4.6.1.3).

The IEDB shall provide 28 Vdc power to pin J14-E, high idle engage stimulus, when master power is ON. The maximum short circuit current shall not exceed 750 mA.

3.4.19.2 EGU Power (see 4.6.1.4.1).

The IEDB shall provide 28 Vdc power to pins J19-H and J19-c, EGU power, when the following conditions are met:

a. Master power is ON.
b. Pin J8-P, engine on switch, is grounded.

3.4.19.3 EGU Function (see 4.6.1.15.1).

The IEDB shall provide 28 Vdc power to pin J19-F, ECM1, when the following conditions are met:

a. Master power is ON.
b. Pin J8-P, engine on switch, is grounded
c. Pin J14-D, high idle engage request, is connected to a 28 Vdc source or pin J8-A, carrier high idle request, is connected to a 28 Vdc source.
d. Pin J4-G, park brake switch, is connected to a 28 Vdc source.
e. Input across pins J19-A and J19-B will be the transmission in neutral signal (See 3.4.25).

3.4.20 Radiator fan bypass solenoid.

3.4.20.1 Radiator fan bypass solenoid engage stimulus(see 4.6.1.3).

The IEDB shall provide 28 Vdc power to pin J14-J, radiator fan engage stimulus, when master power is ON. The maximum short circuit current shall not exceed 750 mA.

3.4.20.2 Radiator fan bypass solenoid function (see 4.6.1.16.1).

The IEDB shall provide 28 Vdc power to pin J19-R, radiator fan , when the following conditions are met:

a. Master power is ON.
b. PTO Clutch is ON.
c. J14-H, radiator fan engage request, is connected to a 28 Vdc source.

3.4.20.3 Radiator fan bypass solenoid ground (see 4.6.1.2).

The IEDB shall provide continuity from pin J12-E, primary ground, to pin J3-Q, radiator fan solenoid ground.

3.4.21 Data Bus.

3.4.21.1 Mil-STD-1553B remote terminal.

The IEDB shall provide a MIL-STD-1553B compatible Remote Terminal configured as Device Code 7. The 1553 interface is defined as follows:

Bus A: J15-A (High), J15-B (Low), J15-C (GND/Shield)

Bus B: J15-D (High), J15-E (Low), J15-F (GND/Shield)

3.4.21.1.1 Mil-STD-1553B remote terminal function (see 4.6.1.17.1).

a. The IEDB shall incorporate a MIL-STD-1553B data bus remote terminal with redundant interface channels.
b. When controlled by appropriate software, the IEDB shall provide functional IEDB reprogramming over the MIL-STD-1553B Data Bus.

3.4.22 STE/ICE.

3.4.22.1 Top dead center magnetic pickup.

3.4.22.1.1 Top dead center magnetic pickup function (see 4.6.1.13.1).

The IEDB shall provide a 6.0 to 20.0 millisecond (ms) pulse of 5.0 ±0.5 volts amplitude, occurring at a frequency of 10 to 20 Hz, to pin J11-c, diagnostic connector assembly 13. when the following conditions are met:

a. Master power is ON.
b. Pin J9-CC, CAM magnetic pickup, is connected to a 200-millivolt (mV), peak-to-peak (p-p) AC sinusoidal signal, symmetrical with respect to ground, with a frequency from 10 to 20 Hz.
c. Pin J10-c, diagnostic connector assembly 3, is connected to a 5.0 ± 0.5 Vdc through a 5.6-kilohm (kohm) ± 5 percent, 0.50-watt resistor. One pulse shall be generated for each negative-going transition of the input signal at J9-CC.

3.4.22.2 STE/ICE matrices (see 4.6.1.13.2).

The IEDB shall perform to the STE/ICE matrices in Table II and Table XI.

Table II. STE/ICE support.

From Pin	To Pin	Shall provide
J9-F	J10-R	95 to 105 ohm
J9-G	J11-R	95 to 105 ohm
J9-x	J10-P	95 to 105 ohm
J9-AA	J10-T	95 to 105 ohm
J9-EE	J11-N	95 to 105 ohm
J9-GG	J10 N	95 to 105 ohm
J10-W	J12-C	95 to 105 ohm
J10-X	J12-D	95 to 105 ohm
J10-V	J12-A	95 to 105 ohm
J10-h	J10-j	0.114 to 0.140 Kohm
J11-h	J11-j	0.99 to 1.2 Kohm

3.4.22.3 STE/ICE transducer power.

3.4.22.3.1 Transducer power 12 Vdc (see 4.6.1.18.1).

The IEDB shall provide 12 Vdc between pins J9-T and J9-U when master power in ON.

3.4.22.3.2 Transducer power 6 Vdc (see 4.6.1.18.2).

a. The IEDB shall provide 6 Vdc between pins J11-Y and J11-g when the master power is ON.
b. The IEDB shall provide 6 Vdc between pins J10-AD and J10-g when the master power is ON

3.4.22.3.3 Transducer power 2.12 Vdc (see 4.6.1.18.3).

a. The IEDB shall provide 2.12 Vdc between pins J10-D and J10-g when the master power is ON.
b. The IEDB shall provide 2.12 Vdc between pins J11-D and J11-g when the master power is ON.

3.4.23 Diodes.

3.4.23.1 Zener diode (see 4.6.1.19.1).

When ground is applied to J12-E and 28 Vdc is applied to J4-k, the following shall occur:

1. The forward drop between J12-E, primary ground, and J7-x shall be between 0.3 and 2.4 Vdc when the positive probe of an DMM, configured in the diode check mode, is connected to J12-E, primary ground.
2. The resistance between J12-E, primary ground and J7-x shall be greater than 100 kohms when the positive probe of an ohmmeter is connected to J7-x.

3.4.25 Transmission in Neutral (see 4.6.1.20).

The Transmission in Neutral output signal shall provide a logic level signal output representing the state of the transmission. If the transmission is in neutral, the signal will be high, otherwise it will be low. In determining if the transmission is in neutral the following criteria are used based upon the input signals Va (pin J19-A) and Vb (pin J19-B):

a. If the voltage Va - Vb is an AC signal of minimum amplitude 13Vp and a maximum amplitude of 40Vp with a frequency on 4kHz, and the minimum high time (t_{on}) in a single cycle is greater than 20us, then the output should be low.
b. If the voltage Va - Vb is an AC signal of magnitude less than 13V with a frequency on 4kHz, and the minimum high time (t_{on}) in a single cycle is greater than 20us, then the output should be high.
c. If the voltage Va - Vb is a DC signal of magnitude 13V or greater, then the output should be low.
d. If the voltage Va - Vb is a DC signal of magnitude less than 13V, then the output should be high.

3.4.26 Deicer.

3.4.26.1 Deicer function (see 4.6.1.21).

The IEDB shall provide 28 Vdc power to pins:

J7-r - deicer gen 1
J7-s - deicer gen 2

when the following conditions are met;

a. Master power ON
b. Pin J8-P, Engine on switch, is grounded.

c. Input across pins J4-B and J4-A, starter interrupt. magnetic pick-up, is connected to a 1.5 ± 0.5 volt peak-to-peak, AC signal with a frequency greater than 800 Hz.

3.5 Environmental conditions.

Unless otherwise specified, the IEDB will meet the requirements specified in Performance (3.4) prior to, during, and after exposure to any reasonable combination of applicable environments listed below.

3.5.1 Low Temperature (see 4.6.2.1).

The IEDB shall demonstrate no performance degradation beyond specification limits after exposure to low temperature in accordance with MIL-STD-810E, method 502.3, procedure I, with lowest storage temperature at -30 degrees Fahrenheit (°F), procedure II, during and after, with the lowest operating temperature at -25°F. After the test, there shall be no evidence of damage or deformation (see 6.4.3).

3.5.2 High Temperature (see 4.6.2.2).

The IEDB shall demonstrate no performance degradation beyond specification limits after exposure to high temperature in accordance with MIL-STD-810E, method 501.3, procedure I, with the highest storage temperature at 160 °F, procedure II, during and after, with the highest operating temperature at 185°F. After the test, there shall be no evidence of damage or deformation.

3.5.3 Shock (see 4.6.2.3).

The IEDB shall demonstrate no performance degradation beyond specification limits and show no evidence of damage or deformation after being subjected to shock in accordance with MIL-STD-810E, method 516.4, procedure I, figure 516.4-4, using 25 g peak value 1/2 sine, and 12 milliseconds time duration in three mutually perpendicular axes.

3.5.4 Vibration (see 4.6.2.4).

The IEDB shall demonstrate no performance degradation beyond specification limits and show no evidence of damage or deformation after being subjected to random vibration in accordance with MIL-STD-810E, method 514.4, figure 514.4-5, category 8. Vibration levels shall be as shown Tables V to VII for Longitudinal, Transverse and Vertical axes, respectively. After the test, there shall be no evidence of damage or deformation.

3.5.5 Humidity (see 4.6.2.5).

The IEDB shall demonstrate no performance degradation beyond specification limits and show no evidence of damage or deformation after exposure to humidity in accordance with MIL-STD-810E, method 507.3, procedure III.

3.5.6 Steam and waterjet cleaning (see 4.6.2.6).

The IEDB shall demonstrate no performance degradation beyond specification limits and shall show no evidence of damage or deterioration after being subjected to steam and waterjet cleaning using a cleaner conforming to A-A 59133.

3.5.7 Fungus (see 4.6.2.7).

The IEDB shall show no change in physical, electrical or material characteristics, shall demonstrate no performance degradation, and shall show no evidence of damage or

deformation. after exposure to a fungus-conducive environment in accordance with MIL-STD-810E, method 508.4.

3.5.8 Salt fog (see 4.6.2.8).

The IEDB shall meet the performance requirements for the following environmental conditions:

Storage, Transportation and Tactical Operation
Salt fallout of 2.8 grams per square meter per year

3.6 Product marking.

Part identification, serial numbers and electrical connector reference designations shall be as specified on Drawing 19207-12463100.

3.7 Workmanship.

Workmanship shall be of a quality that will ensure a product free of burrs, rust, scratches, chips, sharp edges, loose or defective connectors, cracked insulation, faulty soldering, or other defects which may adversely affect the serviceability or appearance of the IEDB.

3.8 Safety.

3.8.1 Safety control.

Current carrying electrical/electronic components of the IEDB and wiring shall incorporate positive protection to prevent hazardous contact exposures to personnel during operation and maintenance of the hardware. Where this protection is not possible during maintenance, use of barriers, shields, guards, warning labels, or other equivalent controls shall be provided.

3.8.2 Assembly and installation.

The IEDB shall be such that reverse or improper assembly, mating or installation of connectors, parts, items, subassemblies and assemblies is prevented in operation and maintenance.

3.8.3 Materials.

The IEDB shall not contain highly toxic, carcinogenic, or radioactive materials.

3.9 Electromagnetic radiation (see 4.6.3)

3.9.1 Electromagnetic Environments (Ref MIS-35361)

The IEDB electromagnetic environment requirements are:

a. The IEDB shall meet the applicable requirements for electromagnetic emissions and susceptibility as referenced in MIL-STD-461.
b. The IEDB shall meet the applicable subsystem compatibility requirements as referenced in MIL-E-6051

3.9.2 Electromagnetic Interference and Compatibility (EMI/EMC) (Ref MIS-35361).

The IEDB shall meet the performance requirements in the presence of the prelaunch E-field electromagnetic radiation operational (EMRO) levels shown in Table III.

Table III. EMRO Environments

Environment From Communication Equipment			
		Amplitude Modulation; also	

Frequency (MHz) [1]	Continuous Wave (rms volts/meter)	400 and 1000 Hz (rms volts/meter)	Frequency Modulation (rms volts/meter)
0.1 - 2	25	25	N/A
2 - 20	50	50	N/A
20 - 100	50	50	50
100 - 500	25	25	N/A
500 - 1,000	50	50	N/A
Environment From Radar			
Frequency (MHz)	Peak (volts/meter)	Pulse Modulation (average volts/meter)	
400 - 9,300	5,000	50	
9,300 - 18,000	2,500	25	

[1] Vertical polarization from 0.1 to 30 MegaHz (MHz). Vertical and horizontal polarization above 30 MHz.

3.9.3 Lightning Strike (Ref MIS-35361).

The IEDB shall not be damaged when subjected to the fields from the near-field lightning environment shown in Table IV. Near-field is defined as a strike 10 m from the M270 Launcher.

Table IV. Lightning Induced Near-Field

Parameter	Value
Amplitude of lightning strike	50.0×10^3 amperes
H-field rate of change at 10 m	3.2×10^9 amperes per meter per second
E-field rate of change at 10 m	1.3×10^{12} volts per meter per second
Maximum E-field at 10 m	3.0×10^6 volts per meter
Maximum H-field at 10 m	0.8×10^3 amperes per meter

3.9.4 Lightning-induced transient (Ref MIS-35361).

In addition to the near-field lightning requirement, the IEDB shall not be damaged when each interface pin is subjected, through a source impedance of 100 ohms, to the transient defined by the following equation:

$$v(t) = 50.8(e^{-10^4 t} - e^{-4 \times 10^6 t})$$

Where: v(t) = time varying voltage, in volts, applied to the interface pin
t = time, in seconds

a. A 6 dB design margin shall be provided for the lightning pin transient.

B The transient shall be referenced from each signal interface pin to equipment case in both polarities.

c. For differential interfaces, the transient shall be applied to both the high and low sides simultaneously and referenced to equipment case.

3.9.5 Electromagnetic Pulse Pin Transient (Ref MIS-35361).

The IEDB shall not be damaged when each interface pin is subjected, through a source impedance of 100 ohms, to the transient defined by the following equation:

$$v(t) = 1.04 \times V_{peak} (\sin(2\pi ft)\, e^{-\pi ft/20})$$

Where: $v(t)$ = time varying voltage, in volts, applied to the interface pin
V_{peak} = peak voltage, as defined in Figure 2
f = damped sine frequency, in Hz
t = time, in seconds

a. The transient shall be referenced from each signal interface pin to equipment case in both polarities.

b. For differential interfaces, the transient shall be applied to both the high and low sides simultaneously and referenced to equipment case.

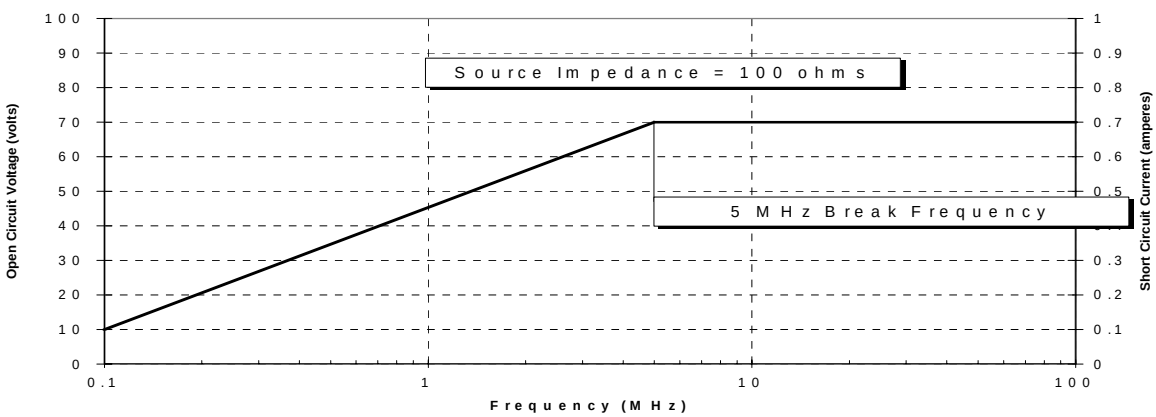

Figure 2. EMP peak voltage and current versus frequency

3.10 Nuclear survivability (see 4.6.4)

Per MIS-35361. Nuclear environment exposure specified in MIS-30225 for air blast, initial nuclear radiation, free field electromagnetic pulse (EMP) and thermal radiation conditions.

Table V. Longitudinal Axis Vibration.

Narrowband Random-on-Random Vibration Specification for:
MLRS: Improved Electrical Distribution Box, Longitudinal

Broadband Random Vibration

Break Point #	Frequency (Hz)	PSD Amplitude (g2/Hz)
1	10	9.997E-05
2	62	0.0072263
3	114	0.0133121
4	166	0.0021356
5	218	0.002243
6	271	0.0012536
7	323	0.0012738
8	375	0.0014855
9	427	0.0016772
10	479	0.0027573
11	531	0.0065966
12	583	0.0021297
13	635	0.0018385
14	687	0.0022279
15	739	0.0028356
16	792	0.004957
17	844	0.0028873
18	896	0.0025758
19	948	0.0023807
20	1000	0.0021271

Broadband G RMS = 1.75

Test Duration
150 minutes for simulated 6000 miles

Sweeping Narrowband Random Vibration

Band # 1	Break Point #	Center Frequency (Hz)	PSD Amplitude (g2/Hz)
	1	16	0.0013996
Sweep Rate	2	28	0.0075419
25 Min.	3	41	0.9252552
Linear	4	57	0.0400093
	5	71	0.4728306
Bandwidth	6	88	0.8674495
4.0	7	101	1.2702845
Hz	8		

Band # 2	Break Point #	Center Frequency (Hz)	PSD Amplitude (g2/Hz)
	1	32	0.0096165
Sweep Rate	2	56	0.0063114
25 Min.	3	82	0.0231605
Linear	4	114	0.1062752
	5	142	0.010587
Bandwidth	6	176	0.0786401
8.0	7	202	0.0367611
Hz	8		

Band # 3	Break Point #	Center Frequency (Hz)	PSD Amplitude (g2/Hz)
	1		
Sweep Rate	2		
25 Min.	3		
Linear	4		
	5		
Bandwidth	6		
12.0	7		
Hz	8		

Band # 4	Break Point #	Center Frequency (Hz)	PSD Amplitude (g2/Hz)
	1		
Sweep Rate	2		
25 Min.	3		
Linear	4		
	5		
Bandwidth	6		
16.0	7		
Hz	8		

Band # 5	Break Point #	Center Frequency (Hz)	PSD Amplitude (g2/Hz)
	1		
Sweep Rate	2		
25 Min.	3		
Linear	4		
	5		
Bandwidth	6		
20.0	7		
Hz	8		

Band # 6	Break Point #	Center Frequency (Hz)	PSD Amplitude (g2/Hz)
	1		
Sweep Rate	2		
25 Min.	3		
Linear	4		
	5		
Bandwidth	6		
24.0	7		
Hz	8		

Amplitude Exageration Factor
3.50

Revision 19 June 1998

Notes:
1. Control System Frequency Resolution = 1Hz
2. Narrowband sweep times are for one direction. (Example; 20 min. low to high, 40 min. low to high to low)

UNITED DEFENSE L.P.

Ground Systems Division
San Jose, Ca
Engineering Analysis, Simulation and Test Dept.

Table VI. Transverse Axis Vibration.

Narrowband Random-on-Random Vibration Specification for:
MLRS: Improved Electrical Distribution Box, Transverse

Broadband Random Vibration

Break Point #	Frequency (Hz)	PSD Amplitude (g2/Hz)
1	10	8.054E-05
2	62	0.0024609
3	114	0.0096909
4	166	0.0143656
5	218	0.0063417
6	271	0.0099209
7	323	0.0067503
8	375	0.0052654
9	427	0.0048468
10	479	0.0049804
11	531	0.0016635
12	583	0.001634
13	635	0.0010944
14	687	0.001271
15	739	0.0029819
16	792	0.0009205
17	844	0.0007307
18	896	0.0008851
19	948	0.0006492
20	1000	0.000677

Broadband G RMS = 1.97

Test Duration
150 minutes for
simulated 6000 miles

Sweeping Narrowband Random Vibration

Band # 1	Break Point #	Center Frequency (Hz)	PSD Amplitude (g2/Hz)
	1	16	0.0010111
Sweep Rate	2	28	0.0042921
25 Min.	3	41	0.2577973
Linear	4	58	0.1258743
	5	71	0.379611
Bandwidth	6	88	1.777075
4.0	7	101	1.327751
Hz	8		

Band # 2	Break Point #	Center Frequency (Hz)	PSD Amplitude (g2/Hz)
	1	32	0.0013806
Sweep Rate	2	56	0.0037994
25 Min.	3	82	0.1018779
Linear	4	116	0.039214
	5	142	0.0738954
Bandwidth	6	176	0.4241003
8.0	7	202	0.0418485
Hz	8		

Band # 3	Break Point #	Center Frequency (Hz)	PSD Amplitude (g2/Hz)
	1	48	0.0019757
Sweep Rate	2	84	0.0335511
25 Min.	3	123	0.0166719
Linear	4	174	0.0221556
	5	213	0.0012622
Bandwidth	6	264	0.0377506
12.0	7	303	0.0262195
Hz	8		

Band # 4	Break Point #	Center Frequency (Hz)	PSD Amplitude (g2/Hz)
	1		
Sweep Rate	2		
25 Min.	3		
Linear	4		
	5		
Bandwidth	6		
16.0	7		
Hz	8		

Band # 5	Break Point #	Center Frequency (Hz)	PSD Amplitude (g2/Hz)
	1		
Sweep Rate	2		
25 Min.	3		
Linear	4		
	5		
Bandwidth	6		
20.0	7		
Hz	8		

Band # 6	Break Point #	Center Frequency (Hz)	PSD Amplitude (g2/Hz)
	1		
Sweep Rate	2		
25 Min.	3		
Linear	4		
	5		
Bandwidth	6		
24.0	7		
Hz	8		

Amplitude Exageration Factor
3.50

Revision 19 June 1998

Notes:
1. Control System Frequency Resolution = 1Hz
2. Narrowband sweep times are for one direction. (Example; 20 min. low to high, 40 min. low to high to low)

UNITED DEFENSE L.P.

Ground Systems Division
San Jose, Ca
Engineering Analysis, Simulation and Test Dept.

Table VII. Vertical Axis Vibration.

Narrowband Random-on-Random Vibration Specification for:
MLRS: Improved Electrical Distribution Box, Vertical

Broadband Random Vibration

Break Point #	Frequency (Hz)	PSD Amplitude (g2/Hz)
1	10	0.0001653
2	62	0.0034872
3	114	0.0102961
4	166	0.0036195
5	218	0.0046554
6	271	0.0057554
7	323	0.0067368
8	375	0.0057755
9	427	0.0068724
10	479	0.0104051
11	531	0.0044476
12	583	0.0015417
13	635	0.0036463
14	687	0.0056319
15	739	0.0033462
16	792	0.003949
17	844	0.0032243
18	896	0.0035827
19	948	0.0016425
20	1000	0.0008318

Broadband G RMS = 2.12

Test Duration
150 minutes for simulated 6000 miles

Sweeping Narrowband Random Vibration

Band # 1	Break Point #	Center Frequency (Hz)	PSD Amplitude (g2/Hz)
	1	16	0.0020217
Sweep Rate	2	28	0.002208
25 Min.	3	41	0.0989701
Linear	4	59	0.1790874
	5	71	0.0898498
Bandwidth	6	89	0.7078515
4.0	7	101	0.9572922
Hz	8		

Band # 2	Break Point #	Center Frequency (Hz)	PSD Amplitude (g2/Hz)
	1	32	0.0004826
Sweep Rate	2	56	0.0017139
25 Min.	3	82	0.0651569
Linear	4	118	0.0473809
	5	142	0.0543516
Bandwidth	6	178	0.1260773
8.0	7	202	0.0211788
Hz	8		

Band # 3	Break Point #	Center Frequency (Hz)	PSD Amplitude (g2/Hz)
	1		
Sweep Rate	2		
25 Min.	3		
Linear	4		
	5		
Bandwidth	6		
12.0	7		
Hz	8		

Band # 4	Break Point #	Center Frequency (Hz)	PSD Amplitude (g2/Hz)
	1		
Sweep Rate	2		
25 Min.	3		
Linear	4		
	5		
Bandwidth	6		
16.0	7		
Hz	8		

Band # 5	Break Point #	Center Frequency (Hz)	PSD Amplitude (g2/Hz)
	1		
Sweep Rate	2		
25 Min.	3		
Linear	4		
	5		
Bandwidth	6		
20.0	7		
Hz	8		

Band # 6	Break Point #	Center Frequency (Hz)	PSD Amplitude (g2/Hz)
	1		
Sweep Rate	2		
25 Min.	3		
Linear	4		
	5		
Bandwidth	6		
24.0	7		
Hz	8		

Amplitude Exageration Factor
3.50

Revision 19 June 1998

Notes:
1. Control System Frequency Resolution = 1Hz
2. Narrowband sweep times are for one direction. (Example; 20 min. low to high, 40 min. low to high to low)

UNITED DEFENSE L.P.

Ground Systems Division
San Jose, Ca
Engineering Analysis, Simulation and Test Dept.

4 QUALITY ASSURANCE PROVISIONS

4.1 Responsibility for inspection.

Unless otherwise specified in the contract or purchase order, the contractor is responsible for the performance of all inspection requirements (examinations and tests) as specified herein. Except as otherwise specified in the contract or purchase order, the contractor may use his own or any other facilities suitable for the performance of the inspection requirements specified herein, unless disapproved by the Government. The Government reserves the right to perform any of the inspections set forth in this specification where such inspections are deemed necessary to ensure supplies and services conform to prescribed requirements.

4.1.1 Responsibility for compliance.

All items shall meet all requirements of sections 3 and 5. The inspection set forth in this specification shall become a part of the contractor's overall inspection system or quality program. The absence of any inspection requirements in the specification shall not relieve the contractor of the responsibility of ensuring that all products or supplies submitted to the Government for acceptance comply with all requirements of the contract. Sampling inspection, as part of manufacturing operations, is an acceptable practice to determine conformance to requirements, however, this does not authorize submission of known defective material, either indicated or actual, nor does it commit the Government to accept defective material.

4.1.2 Automatic test equipment (ATE) software.

When programmable ATE is used, the Government reserves the right to review and approve the final test(s) program, as well as the contractor’s system of developing and controlling ATE software to ensure the end item meets all specification requirements verified through ATE testing. The contractor shall notify the Government upon any changes to a previously approved system to determine whether a new review is required. Disapproval of a system shall render each affected ATE unusable for acceptance of IEDBs until the contractor has established and implemented a corrective action plan (which includes either a software correction or suitable approved workaround) acceptable to the Government. As a minimum, an ATE software system shall include the following, as applicable:

a. Design and coding standards.

b. Test program documentation.

c. Flow charts of program routines.

d. Configuration management of test programs.

e. Design and code reviews, quality assurance and corrective action.

4.1.2.1 ATE fault insertion.

Unless otherwise specified (see 6.2), ATE shall have fault insertion performed in accordance with the appendix upon completion of ATE development. The Government shall be notified of any changes to the ATE to determine if fault insertion must be repeated. Fault insertion shall be approved by the Government prior to ATE usage.

4.1.2.2 Failure.

Inability of the ATE to detect any inserted fault shall constitute a failure. Such failure shall be cause for refusal to allow additional examinations or tests until the cause of failure has been

corrected and the corrective action approved by the Government. In the event of a failure or the need to reestablish a confidence level for ATE fault detection reliability, the Government reserves the right to require additional faults be inserted and tested.

4.1.3 Materials and manufacturing processes.

The contractor shall maintain, and make available for Government review upon request, documentation verifying that materials and processes used in manufacture of the IEDB conform to specified requirements. As a minimum, documentation shall confirm the following:

a. Materials as specified in 3.2.

b. Soldering as specified in 3.3.3.

c. ESS as specified in 3.3.4.

4.2 Classification of inspections.

The inspection requirements specified herein are classified as follows:

a. First article inspection (see 4.4).

b. Quality conformance inspection (see 4.5).

4.3 Inspection conditions.

Unless otherwise specified, all inspections shall be conducted under the following environmental conditions

a. Temperature: 77°F ± 18°F

b. Relative humidity: uncontrolled room ambient

c. Atmospheric pressure: site pressure

4.4 First article inspection.

When a first article sample is required (see 6.3), three IEDBs produced in accordance with 3.1 shall be subjected to first article inspection.

4.4.1 Inspection routine.

The first article sample shall be subjected to the inspections specified in Table VIII.

4.4.2 First article failure.

Inability of the first article samples to pass any examination or test shall constitute a failure. Failure of a sample to pass any examination or test shall be cause for refusal to grant first article approval. Such failure may, at the option of the Government, be cause for refusal to allow additional examinations or tests until causes of faults have been corrected and the corrective action approved by the Government.

Table VIII. First article inspection.

Inspection	Requirement paragraph	Inspection method	Sample		
			1	2	3
Group A	Table IX	Table IX	x	x	x
Weight	3.3.1	Scale	x	x	x
Low temperature	3.5.1	4.6.2.1	x	x	x
High temperature	3.5.2	4.6.2.2	x	x	x
Shock	3.5.3	4.6.2.3	x	x	x
Vibration	3.5.4	4.6.2.4	x	x	x
Humidity	3.5.5	4.6.2.5	x	x	x
Steam and waterjet cleaning	3.5.6	4.6.2.6	x	x	x
Fungus	3.5.7	4.6.2.7			x
Salt Fog	3.5.8	4.6.2.8			x
EMI	3.9	4.6.3			x
Nuclear survivability	3.10	4.6.4			x

4.4.3 Retention of first article approval.

Unless extended by the Government to other contracts, first article approval is valid only on the contract under which it is granted.

4.4.4 Disposition of samples.

Samples that have been subjected to first article inspection shall be indelibly marked "Test Equipment" and shall not be delivered as new equipment under the contract.

4.4.5 Changes to design, processes, procedures, or location.

Whenever a change is made in the design or the manufacturing process, procedures, or facility location used in the production of IEDBs, the Government shall be notified to determine whether the contractor must requalify for first article approval.

4.5 Quality conformance inspection.

4.5.1 Inspection of product for delivery.

Inspection of product for delivery shall consist of Group A inspection.

4.5.1.1 Group A inspection.

Group A inspection shall consist of the inspections specified in Table IX.

4.5.1.1.1 Group A sampling.

Group A shall be subjected to 100 percent inspection.

Table IX. Group A inspection.

Inspection	Requirement Paragraph	Inspection Method (para.)
Master power/Engine on	3.4.2	4.6.1.2, 4.6.1.3, 4.6.1.4
Slave power	3.4.4	4.6.1.2, 4.6.1.5
Utilities/Lighting	3.4.5	4.6.1.2, 4.6.1.3
Launcher and fire control power	3.4.6	4.6.1.2, 4.6.1.6
Generator system	3.4.7	4.6.1.4, 4.6.1.7
Starter system	3.4.8	4.6.1.2, 4.6.1.3, 4.6.1.8
Fuel system	3.4.9	4.6.1.2, 4.6.1.3, 4.6.1.4, 4.6.1.22
Fire suppression system	3.4.10	4.6.1.3
Radio system	3.4.11	4.6.1.9
NBC system	3.4.12	4.6.1.2, 4.6.1.3
Instrument panel gauges	3.4.13	4.6.1.2, 4.6.1.4
Instrument panel lights	3.4.14	4.6.1.2, 4.6.1.3, 4.6.1.4
Personnel heater system	3.4.15	4.6.1.2, 4.6.1.3, 4.6.1.10
Cold start system	3.4.16	4.6.1.2, 4.6.1.11
Suspension lockout system	3.4.17	4.6.1.3, 4.6.1.12
PTO clutch system	3.4.18	4.6.1.3, 4.6.1.14,
EGU system	3.4.19	4.6.1.3, 4.6.1.4, 4.6.1.15
Radiator fan system	3.4.20	4.6.1.2, 4.6.1.3, 4.6.1.16
Data bus	3.4.21	4.6.1.17
STE/ICE	3.4.22	4.6.1.13, 4.6.1.18
Diodes	3.4.23	4.6.1.19
Transmission in Neutral	3.4.25	4.6.1.20
Deicer	3.4.26	4.6.1.21
Dimensions		Standard inspection equipment
Identification marking	3.6	Visual
Workmanship	3.7	Visual

4.5.2 Periodic inspection.

Group B inspection is not required if ESS is performed. If ESS is not required (see 3.3.4 and 6.4.2), group B inspection shall be performed and shall consist of the inspections specified in Table X. Delivery of IEDBs that have passed Group A inspection shall not be delayed pending the results of group B inspection.

Table X. Group B inspection.

Inspection	Requirement Paragraph	Inspection Method
Low Temperature	3.5.1	4.6.2.1
High Temperature	3.5.2	4.6.2.2
Vibration	3.5.4	4.6.2.4
Humidity	3.5.5	4.6.2.5
Steam and waterjet cleaning	3.5.6	4.6.2.6

4.5.2.1 Group B sampling plan.

Unless otherwise specified (see 6.2), sample IEDBs shall be selected at the rate of 1 per each 300 IEDBs produced, or 1 every 6 months, whichever comes first.

4.5.2.2 Noncompliance.

If a sample fails to pass group B inspection, the contractor shall notify the Government of such failure and take corrective action on the materials or processes, or both, as warranted, and on all units of product that were manufactured under essentially the same materials and processes, and are considered subject to the same failure. Acceptance and shipment of product shall be discontinued until corrective action is acceptable to the Government and retest of all failed requirements has shown that the corrective action was successful.

4.5.2.3 Disposition of group B samples.

IEDBs which have been subjected to group B inspection shall not be delivered as new equipment on the contract (see 6.2).

4.5.3 Nonconforming parts.

The contractor may rework or reprocess rejected parts to correct the nonconforming characteristic(s) and resubmit them for inspection. Reworking/reprocessing of parts shall be within the confines of drawing and specification requirements and shall require 100 percent inspection.

4.5.4 Inspection of packaging.

The sampling and inspection of packaging shall be in accordance with 5.1.

4.6 Methods of inspection.

4.6.1 Performance tests.

The following methods of inspection are acceptable for verifying the requirements of section 3.4.

4.6.1.1 Input voltages.

Verification of input voltage requirements shall be demonstrated concurrently with the performance tests specified in 4.6.1.3 to and including 4.6.1.22.2. When specified, apply voltage to the connector pins as shown in Table I.

4.6.1.2 Continuity.

Check and verify that continuity shall be as specified in Table XI.

Table XI. Continuity.

FROM	TO	Notes
J1-A	J7-C	
J1-B	J7-v	
J1-C	J7-Y, J7-y	
J1-D	J10-M, J11-M	STE/ICE
J1-E	J11-a, J11-b	STE/ICE
J1-F	J10-a, J10-b	STE/ICE
J1-G	J11-Z	
J1-H	J10-Z	STE/ICE
J3-C	J3-G, J7-R	
J3-D	J3-F, J7-I	
J3-E	J3-P, J7-Z	
J3-H	J3-M, J7-L	
J3-J	J3-N, J7-P	
J3-L	J3-Q, R, S, U, W, c J4-R, g J7-B, u J8-L, N, S, a, b J9-g, v J9-M, P, U, I, k, m, z, BB J10-F, d, g, t, AA, AC J11-F, X, d, g, n, w, y, AA, AC J12-E J13-B J14-V J19-J, N, S, d, j	 STE/ICE STE/ICE STE/ICE
J3-T	J6-a	
J3-V	J7-n	
J3-b	J7-H	
J3-f	J7-S	
J3-g	J7-g	
J4-D	J6-c	
J4-E	J6-d	
J4-I	J6-Z	
J4-J	J6-U	
J4-K	J8-H	
J4-L	J7-e, J11-L	STE/ICE
J4-N	J4-h, J7-G, K, P, J8-M	
J4-S	J4-T, J7-f	
J4-X	J8-I	
J4-Y	J6-T	
J4-c	J6-W	
J4-d	J6-V	

J4-e	J6-X	
FROM	**TO**	**Notes**
J4-f	J6-B	
J4-k	J11-V	STE/ICE
J6-G	J13-D	
J7-A	J7-a, J8-W	
J7-F	J7-V, t	
J7-J	J8-E	
J7-N	J8-C	
J7-O	J8-B	
J7-X	J8-X	
J7-a	J8-W	
J8-R	J12-K	
J8-V	J12-J	
J9-L	J9-N, T, h, j, n, y J16-1, 6, 13	STE/ICE
J9-M	J9-P, U, I, k, m, z J16-2, 7, 12	STE/ICE
J9-R	J9-S, V, HH, CHASSIS	STE/ICE
J9-V	J9-HH	
J9-W	J10-n	STE/ICE
J9-X	J10-p	STE/ICE
J9-Y	J10-u	STE/ICE
J9-Z	J10-v	STE/ICE
J9-a	J10-y	STE/ICE
J9-b	J10-z	STE/ICE
J9-c	J10-k	STE/ICE
J9-d	J10-m	STE/ICE
J9-e	J10-w	STE/ICE
J9-f	J10-x	STE/ICE
J9-g	J10-s	STE/ICE
J9-r	J11-u	STE/ICE
J9-s	J11-v	STE/ICE
J9-t	J11-k	STE/ICE
J9-u	J11-m	STE/ICE
J9-FF	J11-T	STE/ICE
J10-E	J11-E, J12-H	STE/ICE
J10-W	J10-Y. J11-W	STE/ICE
J10-c	J11-c	STE/ICE
J10-AB	J10-AD	STE/ICE

FROM	**TO**	**Notes**
J11-Y	J11-p, x, z, AB, AD	
J5(-)	CHASSIS	

4.6.1.3 Master power distribution.

The following test shall be performed in the sequence shown.

a. Ground J12-E, primary ground.
b. Attach the following pins to ground through individual 270-ohm ± 5 percent, 5-watt resistors:
   J3-K, J4-h, J4-N, J6-G, J7-G, J7-J, J7-K, J7-k, J7-p, J8-D, J8-E, J8-M, J13-D, J14-V.
c. Apply 28 Vdc source to J2-A, primary power.
d. Verify that the pins listed in step b. are within ± 1.5 volts of 28 Vdc source applied in step c.
e. Verify that the open circuit voltage for the following pins are within ± 1.5 volts of 28 Vdc source applied in step c.
   J14-B, J14-E, J14-J
f. Verify that the maximum short circuit current for the pins listed in step e. is less than 750 mA.

4.6.1.4 Engine on function.

4.6.1.4.1 Engine on function.

The following test shall be performed in the sequence shown.

a. Ground J12-E, primary ground and J8-P, Engine on switch.
b. Attach the following pins to ground through individual 270-ohm ± 5 percent, 5-watt resistors.
   J4-F -primary generator field excitation.
   J7-U -instrument panel gauges/warning indicators.
   J9-E -secondary generator field excitation.
   J3-X -forward fuel pump.
   J3-V -rear fuel pump.
   J19-H, J19-c - EGU power.
c. Apply 28 Vdc source to J2-A, primary power.
d. Verify that the pins listed in step b. are within ±1.5 volts of 28 Vdc source applied in step c.

4.6.1.5 Slave power.

4.6.1.5.1 Slave power function.

The following test shall be performed in the sequence shown.
Steps h, i. and j. requires a floating 28 Vdc supply with the + side connected to ground. The floating supply should have current limit set to 1 -0 +1ampere.

a. Connect the IEDB chassis to J12-E, primary ground.
b. Ground J12-E, primary ground.

c. Attach pin J5(+), slave power, to ground through a 270-ohm ± 5 percent, 5 watt resistor.
d. Apply 28 Vdc source to J2-A, primary power.
e. Verify that J5(+) is within ±0.5 volts of ground.
f. Depress and release slave power switch.
g. Verify J5(+) is within ±0.5 volts of 28 Vdc source applied in step c.
h. Undo steps a, b, and c.
i. Connect the positive (+) side of the 28 Vdc source to J5(-), slave ground.
j. Connect the negative (-) side of the 28 Vdc source to J5(+), slave power.
k. Verify J2-A, primary power, is within ± 1.5 volts of ground.

4.6.1.5.2 Normal polarity indicator light function.

The following test shall be performed in the sequence shown.

a. Connect the IEDB chassis to J12-E, primary ground.
b. Ground J12-E, primary ground.
c. Apply 28 Vdc source to J5(+), slave power.
d. Verify that the green polarity light is ON.
e. Remove 28 Vdc source from J5 (+), slave power.
f. Apply 28 Vdc source to J2-A, primary power.
g. Depress and release the slave power switch.
h. Verify that the green polarity light is ON.

4.6.1.5.3 Reverse polarity indicator light function.

The following test shall be performed in the sequence shown.
Steps a. and b. require a floating 28 Vdc supply with the + side connected to ground. The floating supply should have a current limit set to 1 -0 +1ampere.

a. Connect the IEDB chassis to J12-E, primary ground.
b. Connect the positive (+) side of the 28 Vdc source to J5(-), slave ground.
c. Connect the negative (-) side of the 28 Vdc source to J5(+), slave power.
d. Verify that the red polarity light in ON.
e. Depress and hold the slave power switch.
f. Verify J2-A, primary power, is within ± 1.5 volts of ground.

4.6.1.6 Launcher and fire control power.

4.6.1.6.1 Launcher power switch function.

The following test shall be performed in the sequence shown.

a. Ground J12-E, primary ground.
b. Attach J12-F, launcher power relay coil, to the 28 Vdc source through a 270 ohm ± 10 percent, 5 watt resistor.
c. Apply 28 Vdc source to J2-A, primary power.
d. Verify J12-F, launcher power relay coil, is within ±1.5 volts of 28 Vdc source.
e. Ground J8-Z, launcher power switch
f. Verify J12-F, launcher power relay coil, is within ± 0.5 volts of ground.

4.6.1.7 Generator system.

4.6.1.7.1 Primary generator diagnostic function.

The following test shall be performed in the sequence shown.

a. Ground J12-E, primary ground.

b. Connect J7-w, primary generator warning LED, to 28 Vdc source through a 270-ohm ± 10 percent, 5 watt resistor.
c. Apply 28 Vdc source to J2-A, primary power.
d. Apply 12 +/- 0.5 Vdc to J9-A, primary generator diagnostic.
e. Apply 6.5 +/- 0.5 Vdc to J9-B primary generator diagnostic
f. Apply 6.5 +/- 0.5 Vdc to J9-DD, primary generator alt. diagnostic.
g. Verify J7-w, primary generator warning LED, is within ±1.5 volts of 28 Vdc source.
h. Ground J8-P, Engine on switch.
i. Verify J7-w, primary generator warning LED, is between +3.09 and +7.11 volts.
j. Undo step f, apply 12 +/- 0.5 Vdc to J9-DD, primary generator alt. diagnostic.
k. Verify step g.
l. Undo step d, apply 6.5 +/- 0.5 Vdc to J9-A, primary generator diagnostic.
m. Undo step e, apply 12 +/- 0.5 Vdc to J9-B primary generator diagnostic
n. Undo step j, apply 6.5 +/- 0.5 Vdc to J9-DD, primary generator alt. diagnostic.
o. Verify step i.
p. Undo step l, apply 12 +/- 0.5 Vdc to J9-A, primary generator diagnostic.
q. Verify step g.

4.6.1.7.2 Secondary generator diagnostic function.

The following test shall be performed in the sequence shown.

a. Ground J12-E, primary ground.
b. Connect J7-z, primary generator warning LED, to 28 Vdc source through a 270-ohm ± 10 percent, 5 watt resistor.
c. Apply 28 Vdc source to J2-A, primary power.
d. Apply 12 +/- 0.5 Vdc to J9-C, secondary generator diagnostic.
e. Apply 6.5 +/- 0.5 Vdc to J9-D secondary generator diagnostic
f. Apply 6.5 +/- 0.5 Vdc to J9-H, secondary generator alt. diagnostic.
g. Verify J7-z, secondary generator warning LED, is within ±1.5 volts of 28 Vdc source.
h. Ground J8-P, Engine on switch.
i. Verify J7-z, secondary generator warning LED, is between +3.09 and +7.11 volts.
j. Undo step f, apply 12 +/- 0.5 Vdc to J9-H, secondary generator alt. diagnostic.
k. Verify step g.
l. Undo step d, apply 6.5 +/- 0.5 Vdc to J9-C, secondary generator diagnostic.
m. Undo step e, apply 12 +/- 0.5 Vdc to J9-D secondary generator diagnostic
n. Undo step j, apply 6.5 +/- 0.5 Vdc to J9-H, secondary generator alt. diagnostic.
o. Verify step i.
p. Undo step l, apply 12 +/- 0.5 Vdc to J9-C, secondary generator diagnostic.
q. Verify step g.

4.6.1.8 Starter system.

4.6.1.8.1 Starter interrupt function.

The following test shall be performed in the sequence shown.

a. Ground J12-E, primary ground, and J8-P, Engine on.
b. Apply 28 Vdc source to J2-A, primary power.
c. Apply a 1.5 ±0.5 volt, peak-to-peak square wave with a frequency of 550 ±50 Hz to J4-B, starter int. magnetic pick-up.
d. Verify that J4-L, starter relay coil, is ± 0.5 volt of ground.
e. Increase the frequency of the square ware to 1200 ± 100 Hz.

f. Verify resistance between J4-L, starter relay coil, and ground is greater than 1 megohm.

4.6.1.8.2 Starter cutout override switch function .

The following test shall be performed in the sequence shown.

a. Ground J12-E, primary ground, and J8-P, Engine on.
b. Apply 28 Vdc source to J2-A, primary power.
c. Ground Pin J7-e, starter cutout override switch.
d. Verify that J4-L, starter relay coil, is ± 0.5 volt of ground.

4.6.1.9 Radio system.

4.6.1.9.1 Receiver transceiver function.

The following test shall be performed in the sequence shown.

a. Ground J12-E, primary ground, and J4-k, radio interlock.
b. Connect J7-x, receiver transceiver, to ground through a 50-ohm ± 10 percent, 20 watt resistor.
c. Apply 28 Vdc source to J2-A, primary power.
d. Verify J7-x is within ± 1.5 volts of 28 Vdc source.
e. Unground J4-k radio interlock.
f. Verify J7-x is within ± 1.5 volts of 28 Vdc source.
g. Apply 28 Vdc source to J4-k, radio interlock.
h. Verify J7-x is within ± 0.5 volts of ground.

4.6.1.10 Personnel heater system.

4.6.1.10.1 Heater purge function.

The following test shall be performed in the sequence shown.

a. Ground J6-F, personnel heater purge request.
b. Connect J6-E, personnel heater purge, to ground through a 50-ohm ±10 percent, 20 watt resistor.
c. Apply 28 Vdc source to J12-G, vehicle batteries.
d. Verify J6-E is within ±1.5 volts of 28 Vdc source.

4.6.1.11 Cold start system.

4.6.1.11.1 Cold start switch function.

The following test shall be performed in the sequence shown.

a. Ground the following pins:
   J12-E, primary ground
   J8-P, Engine on switch
   J7-W, cold start switch.
b. Attach the following pins to ground through individual 270-ohm ± 5 percent, 5-watt resistors:
   J7-f -cold start light.
   J4-T -glow plug, cold start fuel pump relay.
   J4-S -glow plug.
c. Apply 28 Vdc source to J2-A, primary power.
d. Verify the pins listed in step b are within ± 1.5 volts of 28 Vdc source.

4.6.1.12 Suspension lockout switch.

4.6.1.12.1 Park brake switch signal.

The following test shall be performed in the sequence shown.

a. Ground J12-E, primary ground.
b. Apply 28 Vdc source to J2-A, primary power.
c. Apply 28 Vdc to J4-G, park brake switch.
d. Verify that J7-b, lockout switch, is within ± 1.5 volts of 28 Vdc source.

4.6.1.13 STE/ICE.

4.6.1.13.1 Top dead center magnetic pickup function.

The following test shall be performed in the sequence shown.

a. Ground J12-E, primary ground.
b. Apply a 5.0 ± 0.5 Vdc to J10-c through a 5.6 kohm ± 5 percent, 0.50 watt resistor.
c. Apply 28 Vdc source to J2-A, primary power.
d. Apply a 200-mv peak-to-peak sinusoidal wave, symmetrical with respect to ground, with a frequency of 15 ± 5 Hz to J9-CC, TDC magnetic pickup.
e. Verify a pulse of width 6.0 to 20.0 ms at J11-c, DCA 13. The pulse shall be generated on each negative going edge of the signal applied in step d. The pulse shall have an amplitude of 5.0 ± 0.5 volts.

4.6.1.13.2 STE/ICE matrices.

Check and verify STE/ICE matrices are as specified in Table II.

4.6.1.14 Power take-off system.

4.6.1.14.1 PTO function.

The following test shall be performed in the sequence shown.

a. Ground J12-E, primary ground, and J8-P, Engine ON.
b. Attach J19-K, PTO, to ground through a 270-ohm ± 5 percent, 5-watt resistor.
c. Attach J14-M, PTO monitor status, to ground through a 270-ohm ± 5 percent, 5-watt resistor.
d. Attach J19-L, PTO clutch ground, to the 28 Vdc source through a 270-ohm ± 5 percent, 5-watt resistor.
e. Apply 28 Vdc source to the following pins:
   J2-A, primary power.
   J4-G, park brake switch.
   J14-N, PTO monitor stimulus.
f. Apply 3 ± 0.5 Vdc between pins J19-A (TEC +) and J19-B (TEC -), with J19-B as the reference ground.
g. Apply a 1.5 ±0.5 volt, peak-to-peak square wave with a frequency 1200 ± 100 Hz to J4-B, starter int. magnetic pick-up.
h. Verify that J19-K, PTO, is within 0.5 volts dc of ground.
i. Verify that J19-L, PTO clutch ground, is within 1.5 volts of 28 Vdc source.
j. Apply 28 Vdc source to J14-A, PTO engage request.
k. Verify that J19-K, PTO, is within 1.5 volts of 28 Vdc source.
l. Verify that J19-L, PTO clutch ground, is within 0.5 volts dc of ground.

m. Increase the frequency listed in step g to 3100 ± 50Hz, and verify step h and i.
n. Decrease the frequency listed in step g to 1200 ± 100Hz.
o. Verify steps h and i.
p. Reset J14-A, PTO engage request. Momentarily ground J14-A, PTO engage request, then reapply the 28 Vdc source.
q. Verify steps k and l.
r. Decrease the frequency listed in step g to 700 ± 50Hz, and verify steps h and i.
s. Increase the frequency listed in step g to 1200 ± 100Hz, and do step p.
t. Verify step k.
u. Verify that J14-M, PTO monitor status, is within 1.5 volts of 28 Vdc source.
v. Ground J14-A, PTO engage request, and verify step h.

4.6.1.14.2 PTO Interrupt function.

The following test shall be performed in the sequence shown.

a. Ground J12-E, primary ground, J8-P, Engine ON, and J14-F, PTO Interrupt return.
b. Attach J19-K, PTO, to ground through a 270-ohm ± 5 percent, 5-watt resistor.
c. Attach J14-M, PTO monitor status, to ground through a 270-ohm ± 5 percent, 5-watt resistor.
d. Attach J19-L, PTO clutch ground, to the 28 Vdc source through a 270-ohm ± 5 percent, 5-watt resistor.
e. Apply 28 Vdc source to the following pins:
   J2-A, primary power.
   J4-G, park brake switch.
   J14-N, PTO monitor stimulus.
f. Apply 3 ± 0.5 Vdc between pins J19-A (TEC +) and J19-B (TEC -), with J19-B as the reference ground.
g. Apply a 1.5 ±0.5 volt, peak-to-peak square wave with a frequency 1200 ± 100 Hz to J4-B, starter int. magnetic pick-up.
h. Verify that J19-K, PTO, is within 0.5 volts dc of ground.
i. Verify that J19-L, PTO clutch ground, is within 1.5 volts of 28 Vdc source.
j. Apply 28 Vdc source to J14-A, PTO engage request.
k. Verify that J19-K, PTO, is within 1.5 volts of 28 Vdc source.
l. Verify that J19-L, PTO clutch ground, is within 0.5 volts dc of ground.
m. Apply 28 Vdc source to J14-G, PTO Interrupt signal, and verify step h and i.
n. Reset J14-A, PTO engage request. Momentarily ground J14-A, PTO engage request, then reapply the 28 Vdc source.
o. Verify steps h and i.
p. Remove the 28 Vdc source to J14-G, PTO Interrupt signal, and do step n.
q. Verify step k.
r. Verify that J14-M, PTO monitor status, is within 1.5 volts of 28 Vdc source.
s. Ground J14-A, PTO engage request, and verify step h.

4.6.1.15 Engine governor unit (EGU) system.

4.6.1.15.1 EGU function.

The following test shall be performed in the sequence shown.

a. Ground J12-E, primary ground, and J8-P, Engine on.
b. Attach J19-F, ECM1, to the 28 Vdc source through a 270 ohm ± 10 percent, 5 watt resistor.
c. Apply 28 Vdc source to J2-A, primary power.

d. Verify that J19-H, EGU output +, is within ± 1.5-volts of the 28 Vdc source.
e. Apply 28 Vdc source to J4-G, park brake switch.
f. Apply 3 ± 0.5 Vdc between pins J19-A (TEC +) and J19-B (TEC -), with J19-B as the reference ground.
g. Verify that J19-F, ECM1, is within ± 3.5-volts of the 28 Vdc source.
h. Apply 28 Vdc source to J14-D, high idle engage request.
i. Verify that J19-F, ECM1, is within ± 1.5-volt of ground.
j. Undo step h.
k. Verify step g.
l. Apply 28 Vdc source to J8-A, carrier high idle request.
m. Verify step i.
n. Increase the voltage in step f. to 17 ± 0.5 Vdc peak.
o. Verify step g.

4.6.1.16 Radiator fan system.

4.6.1.16.1 Radiator fan function.

The following test shall be performed in the sequence shown.

a. Ground J12-E, primary ground.
b. Connect both J19-R, radiator fan, and J19-K, PTO output, to ground through 270-ohm ± 5 percent, 5-watt resistors.
c. Apply 3 ± 0.5 Vdc between pins J19-A (TEC +) and J19-B (TEC -), with J19-B as the reference ground.
d. Apply a 1.5 ±0.5 volt, peak-to-peak square wave with a frequency 1200 ± 100 Hz to J4-B, starter int. magnetic pick-up.
e. Apply 28 Vdc source to the following pins:
   J2-A, primary power.
   J4-G, park brake switch.
f. Apply 28 Vdc source to J14-A, PTO request.
g. Verify that J19-K, PTO output, is within ± 1.5 volts of the 28 Vdc source
h. Verify that J19-R, radiator fan, is within 0.5 volt of ground.
i. Apply 28 Vdc source to J14-H, radiator fan engage request.
j. Verify that J19-R, radiator fan, is within ± 1.5 volts of the 28 Vdc source.

4.6.1.17 MIL-STD-1553B data bus.

4.6.1.17.1 MIL-STD-1553B remote terminal.

Set-up for test:

a. Use PC with IDEA software installed and IDEA test program “IEDB7” installed.
b. Verify 1553 cable is properly connected to PC 1553 card on channel A and IEDB 1553 connector.
c. Verify power supply is properly set up to power the IEDB box.

Testing Steps:

d. On PC with IDEA software installed, type in "IDEA"
e. On PC, setup as Bus Controller using the following command for IDEA: “ 07-T-31-2” (Setup a mode code command to Remote Terminal 7 for Transmit)
f. On PC, select Run/Forever to execute the command. Power up the IEDB box.
g. On PC run IDEA program “IEDB7”, if Response Timeout status occurs, the test failed, otherwise, the test passed.

OPTIONAL TEST METHOD

Connect an 1553 tester, or a computer (PC) equipped with a 1553 interface, to the IEDB 1553 per 3.4.21.1 and power up the IEDB.

On PC, set up as Bus Controller, repeatedly send the following command to the IEDB;

"07-T-31-2" (Setup a mode code command to Remote Terminal 7 for Transmit)

and continuously monitor the IEDB response.

If Response Timeout status occurs, the test fails. Otherwise, the test continues to pass.

4.6.1.18 STE/ICE Transducer Power.

4.6.1.18.1 Transducer Power 12 Vdc.

The following test shall be performed in the sequence shown.

a. Ground J12-E, primary ground.
b. Apply 28 Vdc source to J2-A, primary power.
c. Using a DMM, verify the voltage between J9-T and J9-U is within ± 1.5 volts of 12 Vdc with J9-U as the reference ground.

4.6.1.18.2 Transducer Power 6 Vdc.

The following test shall be performed in the sequence shown.

a. Ground J12-E, primary ground.
b. Apply 28 Vdc source to J2-A, primary power.
c. Using a DMM, verify the voltage between J11-Y and J11-g is within ± 0.5 volts of 6 Vdc.
d. Using a DMM, verify the voltage between J10-AD and J10-g is within ± 0.5 volts of 6 Vdc.

4.6.1.18.3 Transducer Power 2.12 Vdc.

The following test shall be performed in the sequence shown.

a. Ground J12-E, primary ground.
b. Apply 28 Vdc source to J2-A, primary power.
c. Using a DMM, verify the voltage between J10-D and J10-g is within ± 0.5 volts of 2.12 Vdc.
d. Using a DMM, verify the voltage between J11-D and J11-g is within ± 0.5 volts of 2.12 Vdc.

4.6.1.19 Diodes.

4.6.1.19.1 Zener diode.

The following test shall be performed in the sequence shown.

a. Ground J12-E, primary ground.
b. Apply 28 Vdc source to J4-k, starter interrupt.

c. Connect the positive probe of a DMM, configured in the diode check mode, to J12-E, primary ground, and the negative probe to J7-x.
d. Verify that the voltage is between 0.3 and 2.4 Vdc.
e. Connect the positive probe of an ohmmeter to J7-x and the negative probe to J12-E, primary ground. Verify that the resistance between pins is greater than 100 kohms.

4.6.1.20 Transmission in neutral.

The following test shall be performed in the sequence shown.

a. Ground the following pins:
   J12-E, primary ground
   J8-P, Engine on switch
b. Attach J19-F, ECM1 (1240 rpm), to the 28 Vdc source through a 270 ohm ± 10 percent, 5 watt resistor.
c. Apply 28 Vdc source to the following pins:
   J2-A, primary power
   J4-G, park brake switch
d. Apply 3 ± 0.5 Vdc between pins J19-A (TEC +) and J19-B (TEC -), with J19-B as the reference ground.
e. Verify that J19-F, ECM1 (1240 rpm), is within ± 1.5 Vdc of the 28 Vdc source.
f. Apply 28 Vdc source to J14-D, high idle engage request.
g. Verify that J19-F, ECM1 (1240 rpm), is within ± 1.5 Vdc of ground.
h. Increase the voltage shown in step d. to 17 ± 0.5 Vdc.
i. Verify that J19-F, ECM1 (1240 rpm), is within ± 1.5 Vdc of the 28 Vdc source.
j. Undo step d., ground J19-B (TEC -).
k. Apply a 3 ± 0.5 volt peak pulse, with respect to ground, with a pulse width of 20 +/- 2 microseconds and a pulse repetition rate of 4 +/- 0.1 kHz to J19-A (TEC +).
l. Reset J14-D, high idle engage request. Momentarily remove and then reapply the 28 Vdc source to J14-D, high idle engage request.
m. Verify step g.
n. Increase the voltage shown in step k. to 17 ± 0.5 Vdc peak.
o. Verify step e.

4.6.1.21 Deicer system.

4.6.1.21.1 Deicer Gen 1 function.

The following test shall be performed in the sequence shown.

a. Ground J12-E, primary ground, and J8-P, Engine on.
b. Attach J7-r, deicer gen 1, to ground through a 50 ohm ± 10 percent, 20 watt resistor.
c. Apply 28 Vdc source to J2-A, primary power.
d. Apply a 1.5 ±0.5 volt, peak-to-peak square wave with a frequency of 1200 ± 100 Hz to J4-B, starter int. magnetic pick-up.
e. Apply 12 +/- 0.5 Vdc to J9-A, J9-B and J9-DD, primary generator diagnostic.
f. Verify J7-r, deicer gen 1, is within ±1.5 volts of 28 Vdc source.
g. Decrease the frequency listed in step d. to 550 ± 50 Hz.
h. Verify J7-r, deicer gen 1, is within ± 0.5 volt of ground.

4.6.1.21.2 Deicer Gen 2 function.

The following test shall be performed in the sequence shown.

a. Ground J12-E, primary ground, and J8-P, Engine on.
b. Attach J7-s, deicer gen 2, to ground through a 50 ohm ± 10 percent, 20 watt resistor.
c. Apply 28 Vdc source to J2-A, primary power.
d. Apply a 1.5 ±0.5 volt, peak-to-peak square wave with a frequency 1200 ± 100 Hz to J4-B, starter int. magnetic pick-up.
e. Apply 12 +/- 0.5 Vdc to J9-C, J9-D and J9-H, secondary generator diagnostic.
f. Verify J7-s, deicer gen 2, is within ±1.5 volts of 28 Vdc source.
g. Decrease the frequency listed in step d. to 550 ± 50 Hz.
h. Verify J7-s, deicer gen 2, is within ± 0.5 volt of ground.

4.6.1.22 Fuel pump failure indicators

4.6.1.22.1 Forward fuel pump failure indicator signal.

a. Ground J12-E, primary ground.
b. Ground J8-P, Engine on switch.
c. Attach J7-m, forward fuel pump light, to the 28 Vdc source through a 270 ohm ± 10 percent, 5 watt resistor.
d. Apply 28 Vdc source to J2-A, primary power.
e. Verify the following pins are within ± 1.5 Vdc of the 28 Vdc source:
    1. J7-m, forward fuel pump light
    2. J3-X, forward fuel pump
f. Undo step b.
g. Connect a 1.5 ohm +/- 10%, 25 watt resistor between J3-X, forward fuel pump, and J12-E, primary ground.
h. Redo step b.
i. Verify that J3-X, forward fuel pump, is within ± 0.5 volts of ground:
j. Verify that J7-m, forward fuel pump light, is between +3.09 and +7.11 volts.
k. Undo steps b. and g.
l. Redo step b.
m. Verify the following pins are within ± 1.5 Vdc of the 28 Vdc source:
    1. J7-m, forward fuel pump light
    2. J3-X, forward fuel pump

4.6.1.22.2 Rear fuel pump failure indicator signal.

a. Ground J12-E, primary ground.
b. Ground J8-P, Engine on switch.
c. Attach J7-n, rear fuel pump light, to the 28 Vdc source through a 270 ohm ± 10 percent, 5 watt resistor.
d. Apply 28 Vdc source to J2-A, primary power.
e. Verify the following pins are within ± 1.5 Vdc of the 28 Vdc source:
    1. J7-n, rear fuel pump light
    2. J3-V, rear fuel pump
f. Undo step b.
g. Connect a 1.5 ohm +/- 10%, 25 watt resistor between J3-V, rear fuel pump, and J12-E, primary ground.
h. Redo step b.
i. Verify that J3-V, rear fuel pump, is within ± 0.5 volts of ground:
j. Verify that J7-n, rear fuel pump light, is between +3.09 and +7.11 volts.
k. Undo steps b. and g.

l. Redo step b.
m. Verify the following pins are within ± 1.5 Vdc of the 28 Vdc source:
    1. J7-n, rear fuel pump light
    2. J3-V, rear fuel pump

4.6.2 Environmental tests.

The following methods of inspection are acceptable for verifying compliance with 3.5. Prior to and at the conclusion of each of the environmental tests, the IEDB shall be operated under stabilized standard ambient conditions (see 4.3) to determine conformance with the inspections and tests specified in Table IX, and examined for evidence of deformation or damage.

4.6.2.1 Low temperature.

The IEDB shall be placed in a temperature chamber and subjected to low temperature as specified in 3.5.1. Verify conformance to the performance requirements specified in Table IX while the chamber is at the lowest operating temperature.

See Note 6.5.

4.6.2.2 High temperature.

The IEDB shall be placed in a temperature chamber and subjected to high temperature as specified in 3.5.2. Verify conformance to the performance requirements specified in Table IX while the chamber is at the highest operating temperature.

See Note 6.6.

4.6.2.3 Shock.

The IEDB shall be mounted to a shock table in a manner simulating actual usage in the vehicle and subjected to shock as specified in 3.5.3. No operational testing shall be required during shock.

4.6.2.4 Vibration.

The IEDB shall be mounted to a vibration table in a manner simulating actual usage in the vehicle and vibrated along each axis in accordance with the vibration levels specified in 3.5.4. No operational testing shall be required during vibration.

See Note 6.7.

4.6.2.5 Humidity.

The IEDB shall be placed in a humidity chamber and subjected to humidity as specified in 3.5.5. No operational testing shall be required during humidity exposure.

4.6.2.6 Steam and waterjet cleaning.

To determine conformance to 3.5.6, the IEDB shall be subjected to steam cleaning, followed immediately by waterjet cleaning as follows. The jet shall be applied perpendicular to the surface being cleaned at a distance of not greater than 1 foot for steam cleaning, and not greater than 3 feet for waterjet cleaning. The jet pressure shall be 105 ± 5 pound-force per square inch gage (psig) for steam cleaning and 50 ± 5 psig for waterjet cleaning. The jet for both steam and water shall be moved at such a rate that the exposed surface of the IEDB is subjected to the jet at the rate of 1 square foot per minute for 2 to 3 minutes. The nozzle's orifice for both steam and waterjet shall be between 0.18 and 0.26 inch in diameter. The fluid

delivery setup shall be verified by measuring the minimum waterjet flow rate for given orifice or the jet velocity of at least 85 feet per second. The minimum flow rate is 14 gallons per minute for an orifice of 0.26 inch diameter and 6.8 gallons per minute for an orifice of 0.18 inch diameter. The IEDB shall be subjected to the performance requirements within 1 hour (unless otherwise directed by the Government) after completing the steam and waterjet cleaning. There shall be no entry of water or moisture to modules sealed against water or moisture.

4.6.2.7 Fungus .

The IEDB shall be subjected to a fungus-conducive environment as specified in 3.5.7. No operational testing is required during fungus exposure. The presence of loosely spread microbial colonies on substrate surfaces is permissible (grade 2).

4.6.2.7.1 Optional method.

If the responsible Government agent grants approval, the fungus testing requirement of 3.5.7 may be met by engineering analysis, previous testing or certification that materials used are of a nonnutrient base.

4.6.2.8 Salt Fog.

The IEDB shall be exposed to salt fog as specified in 3.5.8 in accordance with MIL-STD-810E. Method 509.3.

4.6.2.8.1 Optional method.

If the responsible Government agent grants approval, the salt fog testing requirement of 3.5.8 may be met by engineering analysis, previous testing or certification.

4.6.3 Electromagnetic radiation

Conformance to the requirements of 3.9 shall be verified through testing or engineering analysis, as directed by the responsible Government agent.

4.6.4 Nuclear survivability.

Conformance to the requirements of 3.10 shall be verified through testing or engineering analysis, as directed by the responsible Government agent.

5. PACKAGING

5.1 Preservation, packing and marking.

Unless otherwise specified (see 6.2), the minimum level of preservation, packaging, and marking shall be commercial in accordance with MIL-E-17555.

6. NOTES

6.1 Intended use.

IEDBs manufactured in accordance with this specification are intended for use on tracked vehicles in the Bradley Fighting Vehicle (BFV) Family.

6.2 Acquisition requirements.

Acquisition documents must specify the following:

a. Title, number, revision, and date of this specification.

b. Title, number, revision, and date of part drawing.

c. Issue of DODISS to be cited in the solicitation, and if required, the specific issue of individual documents referenced (see 2.1).

d. First article inspection, if required (see 3.1).

e. ESS, if other than as specified herein (see 3.3.4).

f. Responsibility for inspection, if other than as specified herein (see 4.1).

g. Group B inspection, if required (see 4.5.2), and group B sampling plan, if other than as specified (4.5.2.1).

h. Test sample disposition, if other than as specified herein (see 4.5.2.3).

i. Levels of preservation and packing (see 5.1).

j. Any deviation from this specification.

6.3 First article.

When first article inspection is required (see 3.1), the contracting officer should provide specific guidance to bidders whether it should include preproduction samples and/or initial production samples, or standard production samples from the contractor's current inventory. The acquisition document should include specific instructions regarding the arrangements for examinations, approval of first article test results and disposition of first articles. Invitations for bids should provide that the Government reserves the right to waive first article inspection, or any portion thereof, to those bidders offering a product which has been previously acquired or tested by the Government or other responsible testing activity. Bidders offering such products should furnish evidence with the bid that prior first article approval is presently appropriate for the pending contract, or that first article inspection or any portion thereof, is inappropriate or unnecessary for the pending contract.

6.4 Definitions.

6.4.1 Improved Electrical Distribution Box.

The IEDB is an upgraded version of the electrical distribution box shown on Drawing 19207-12358395, and serves as a power distribution control box for the majority of the M993 Carrier's automotive and diagnostic functions, as well as some MLRS system tactical functions.

6.4.2 Environmental stress screening.

Environmental stress screening (ESS) is a process that subjects devices to physical and climatic stress (or combinations thereof). This stress forces flaws that are not ordinarily apparent into observable failures which can then be removed. Flaws are defects in design, workmanship or material that will eventually result in the failure of the device prior to its normal life expectancy.

6.4.3 Damage and deformation.

For the purposes of this specification, "damage or deformation" is defined as visual evidence of cracks, loose wires or hardware, and deformation beyond dimensional requirements specified on Drawing 19207-12463100.

6.5 Note to 4.6.2.1 Low Temperature.

The IEDB functional ATE test being used during low temperature performance validation excludes paragraph's 4.6.1.2 Continuity, 4.6.1.13.2 STE/ICE matrices and 4.6.1.5 Slave power, of the Table IX performance requirements. This modified version of the IEDB test software was created per a directive from UDLP and is currently being used during ESS testing – Vibration and Thermal. These omitted tests are performed as part of the product acceptance test.

6.6 Note to 4.6.2.2 High Temperature.

The IEDB functional ATE test being used during high temperature performance validation excludes paragraph's 4.6.1.2 Continuity, 4.6.1.13.2 STE/ICE matrices and 4.6.1.5 Slave power, of the Table IX performance requirements. This modified version of the IEDB test software was created per a directive from UDLP and is currently being used during ESS testing – Vibration and Thermal. These omitted tests are performed as part of the product acceptance test.

6.7 Note to 4.6.2.4 Vibration.

This paragraph states that no operational testing shall be required during vibration. LAU Technologies is currently testing during this phase of ESS. The IEDB functional ATE test being used during vibration performance validation excludes paragraph's 4.6.1.2 Continuity, 4.6.1.13.2 STE/ICE matrices and 4.6.1.5 Slave power, of the Table IX performance requirements. This modified version of the IEDB test software was created per a directive from UDLP and is currently being used during ESS testing – Vibration and Thermal. These omitted tests are performed as part of the product acceptance test.

APPENDIX FAULT INSERTION

10. SCOPE.

10.1 Scope.

This appendix contains the fault conditions to be verified upon completion of ATE development. This appendix forms a mandatory part of the specification. The information contained herein is intended for compliance.

20. APPLICABLE DOCUMENTS.

This section is not applicable to this appendix.

30. REQUIREMENTS.

30.1 Fault conditions.

Table I contains a list of one of each type of fault that can be inserted into the ATE to verify that it is capable of detecting a faulty IEDB. In addition, a list of acceptable readings is shown to provide a range of readings that the ATE should print out. If the ATE is capable of printing the actual measured values, the printout of fault measurements shall be verified to be within the acceptable ATE reading range for each fault. Acceptable ATE readings allow for ATE and fault insertion equipment tolerances.

30.2 Fault determination/derivation.

The faults and acceptable fault readings were determined based on the assumption that all measuring equipment will have a combined accuracy of 95 percent or better, including cable loss. The faults and acceptable ATE readings listed in Table I were derived by the following method:

Given that the specification requires that a voltage fall between "X Vdc" and "Y Vdc", then:

1. Below specification requirement:
   a. Fault = (X - 0.12Y $\pm$ 0.05Y) Vdc, but no less than 0.0.
   b. Acceptable ATE reading = (X - 0.12Y $\pm$ 0.10Y) Vdc, but no less than 0.0 for timing and no less than 0.05Y below 0.0 for other readings.
2. Above specification requirement:
   a. Fault = (Y + 0.12Y $\pm$ 0.05Y) Vdc.
   b. Acceptable ATE reading = (Y + 0.12Y $\pm$ 0.10Y) Vdc.

Table A - 1. Fault conditions.

Specification Paragraph	Requirement	Fault to Insert	Acceptable ATE Reading
TBD	TBD	TBD	TBD

APPENDIX B ELECTRICAL TESTS

Table B - 1. Electrical Tests

ITEM	CON PIN	SIGNAL NAME	INPUT/ OUTPUT	MONITOR	SOURCE	CONTROL	SIGNAL LEVEL	SIGNAL TYPE	ACT H/L	BUFFER	TO REF. #	CHAN. NO.	ADDRESS LINES (P2-01TO P2-8)	DATA VALUE (P2-09-P2-24)	OUTPUT DRIVE CURRENT	COMMENTS
1	A3J1 - 001	N/CPROG						N/CTTL				NA				
2	A3J1 - 002	GND		Y				GND				NA				
3	A3J1 - 003	12MHZ		Y	A3			TTL	H			NA				12MHZ TTL CLOCK
4	A3J1 - 004	GND		Y				GND				NA				
5	A3J1 - 005	PRESET#		Y				TTL	IN			NA				
6	A3J1 - 006	1MSOUT		Y	A3			TTL	H			NA				
7	A3J1 - 007	GND		Y				GND				NA				
8	A3J1 - 008	1SOUT		Y	A3			TTL	H			NA				
9	A3J1 - 009	GND		Y				GND				NA				
10	A3J1 - 010	MCS1#		N				TTL				NA				
11	A3J1 - 011	MCS2#		N				TTL				NA				
12	A3J1 - 012	MCS3#		N				TTL				NA				
13	A3J1 - 013	GND		Y				GND				NA				
14	A3J1 - 014	GND		Y				GND				NA				
15	A3J1 - 015	3.6864MHZ		N				TTL				NA				
16	A3J1 - 016	GND		Y				GND				NA				
17	A3J1 - 017	GND		Y				GND				NA				
18	A3J1 - 018	186-RESET#		Y	A3			TTL				NA				
19	A3J1 - 019	M/IO		N				TTL				NA				
20	A3J1 - 020	BHE#		N				TTL				NA				
21	A3J1 - 021	SPARE_CS#		N				TTL				NA				
22	A3J1 - 022	XIOCS PCS1#		Y				TTL				NA				PERIPHERAL CHIP SELECT
23	A3J1 - 023	XIORDRD#		Y	A3			TTL	IN			NA				READ SIGNAL
24	A3J1 - 024	GND		Y				GND				NA				
25	A3J1 - 025	WR#		Y	A3			TTL	IN			NA				WRITE SIGNAL
26	A3J1 - 026	MA16		N				TTL				NA				
27	A3J1 - 027	MA17		N				TTL				NA				
28	A3J1 - 028	GND		Y				GND				NA				
29	A3J1 - 029	XSD00MD00		Y				TTL	I/O			NA				INTERCARD DATA LINE
30	A3J1 - 030	XSD01MD01		Y				TTL	I/O			NA				INTERCARD DATA LINE
31	A3J1 - 031	XSD02MD02		Y				TTL	I/O			NA				INTERCARD DATA LINE

ITEM	CON PIN	SIGNAL NAME	INPUT/ OUTPUT	MONITOR	SOURCE	CONTROL	SIGNAL LEVEL	SIGNAL TYPE	ACT H/L	BUFFER	TO REF. #	CHAN. NO.	ADDRESS LINES (P2-01TO P2-8)	DATA VALUE (P2-09-P2-24)	OUTPUT DRIVE CURRENT	COMMENTS
32	A3J1 - 032	XSD03MD03		Y				TTL	I/O			NA				INTERCARD DATA LINE
33	A3J1 - 033	GND		Y				GND				NA				
34	A3J1 - 034	XSD04MD04		Y				TTL	I/O			NA				INTERCARD DATA LINE
35	A3J1 - 035	MD05XSD05		Y				TTL	I/O			NA				INTERCARD DATA LINE
36	A3J1 - 036	XSD06MD06		Y				TTL	I/O			NA				INTERCARD DATA LINE
37	A3J1 - 037	XSD07MD07		Y				TTL	I/O			NA				INTERCARD DATA LINE
38	A3J1 - 038	GND		Y				GND				NA				
39	A3J1 - 039	XSD08MD08		Y				TTL	I/O			NA				INTERCARD DATA LINE
40	A3J1 - 040	XSD09MD09		Y				TTL	I/O			NA				INTERCARD DATA LINE
41	A3J1 - 041	XSD10MD10		Y				TTL	I/O			NA				INTERCARD DATA LINE
42	A3J1 - 042	XSD11MD11		Y				TTL	I/O			NA				INTERCARD DATA LINE
43	A3J1 - 043	GND		Y				GND				NA				
44	A3J1 - 044	XSD12MD12		Y				TTL	I/O			NA				INTERCARD DATA LINE
45	A3J1 - 045	XSD13MD13		Y				TTL	I/O			NA				INTERCARD DATA LINE
46	A3J1 - 046	XSD14MD14		Y				TTL	I/O			NA				INTERCARD DATA LINE
47	A3J1 - 047	XSD15MD15		Y				TTL	I/O			NA				INTERCARD DATA LINE
48	A3J1 - 048	IN8MA00		N				N/CTTL				NA				
49	A3J1 - 049	XSA01MA01		Y				TTL	IN			NA				
50	A3J1 - 050	XSA02XSA03 MA02		Y				TTL				NA				
51	A3J1 - 051	GNDMA03		Y				TTLGND				NA				
52	A3J1 - 052	XSA04GND		Y				TTLGND	IN			NA				
53	A3J1 - 053	MA04		N				N/CTTL				NA				
54	A3J1 - 054	MA05		N				N/CTTL				NA				
55	A3J1 - 055	MA06		N				N/CTTL				NA				
56	A3J1 - 056	MA07		N				N/CTTL				NA				
57	A3J1 - 057	GND		Y				GND				NA				
58	A3J1 - 058	MA08		N				N/CTTL				NA				
59	A3J1 - 059	MA09		N				N/CTTL				NA				
60	A3J1 - 060	MA10		N				N/CTTL				NA				
61	A3J1 - 061	MA11		N				TTL				NA				
62	A3J1 - 062	GND		Y				GND				NA				
63	A3J1 - 063	MA12		N				TTL				NA				
64	A3J1 - 064	MA13		N				TTL				NA				
65	A3J1 - 065	MA14		N				TTL				NA				
66	A3J1 - 066	MA15		N				TTL				NA				
67	A3J1 - 067	GND		Y				GND				NA				
68	A3J1 - 068	CLK128MSOU		Y	A3			TTL				NA				

ITEM	CON PIN	SIGNAL NAME	INPUT/ OUTPUT	MONITOR	SOURCE	CONTROL	SIGNAL LEVEL	SIGNAL TYPE	ACT H/L	BUFFER	TO REF. #	CHAN. NO.	ADDRESS LINES (P2-01TO P2-8)	DATA VALUE (P2-09-P2-24)	OUTPUT DRIVE CURRENT	COMMENTS
		T														
69	A3J1 - 069	CLK8MSOUT		N	A3			TTL				NA				
70	A3J1 - 070	MA18		N				TTL				NA				
71	A3J1 - 071	MA19		N				TTL				NA				
72	A3J1 - 072	UCS#		N				TTL				NA				
73	A3J1 - 073	GND		Y				GND				NA				
74	A3J1 - 074	IO_ISPSCLK		Y	A3			TTL	OUT			NA				ARRAY PGM CLK
75	A3J1 - 075	IO_ISPENM#		Y	A3			TTL	OUT			NA				ARRAY PGM #
76	A3J1 - 076	IO_ISPMODE		Y	A3			TTL	OUT			NA				ARRY PGM MODE
77	A3J1 - 077	IiO_ISPSD0		Y	A3			TTL	I/O			NA				ARRAY PGM DATA
78	A3J1 - 078	IO_ISPSDI1		Y	A3			TTL	I/O			NA				ARRY PGM DATA
79	A3J1 - 079	+5V		Y	A4			+5V	OUT			NA				
80	A3J1 - 080	GND		Y	A3			GND				NA				
81	A3J1 - 081	GND		Y	A3			GND				NA				
82	A3J1 - 082	+5V		Y	A4			+5V	OUT			NA				
83	A3J1 - 083	+5V		Y	A4			+5V	OUT			NA				
84	A3J1 - 084	GND		Y	A4			GND				NA				
85	A3J1 - 085	+15V_D		Y	A4			+15V	OUT			NA				
86	A3J1 - 086	+15V_D_RTN		Y	A3			GND				NA				
87	A3J1 - 087	+15V_A_RTN		N				GND N/C				NA				
88	A3J1 - 088	+15V_A		N				+15V N/C				NA				
89	A3J1 - 089							N/C N/C				NA				
90	A3J1 - 090	-15V		Y	A4			-15V	OUT			NA				
91	A3J1 - 091	-15V_RTN		Y	A3			GND				NA				
92	A3J1 - 092	-15V_RTN		N				GND				NA				
93	A3J1 - 093	-15V		N				-15V				NA				
94	A3J1 - 094			N				N/C				NA				
95	A3J1 - 095	GND		Y	A3			GND				NA				
96	A3J1 - 096	UWR#		N								NA				
97	A3J1 - 097	LWR#		N								NA				
98	A3J1 - 098	PCS3#		N								NA				
99	A3J1 - 099	PCS4#		N								NA				
100	A3J1 - 100	GND		Y	A3			GND				NA				
101	A3J1 - 101	PCS5#		N								NA				
102	A3J1 - 102	PCS6#		N								NA				
103	A3J1 - 103	SCLK		N	EXT			TTL	EXT			NA				
104	A3J1 - 104	MODE		N	EXT			TTL	IN			NA				
105	A3J1 - 105	ISPEN#		N	EXT			TTL	IN			NA				

ITEM	CON PIN	SIGNAL NAME	INPUT/ OUTPUT	MONITOR	SOURCE	CONTROL	SIGNAL LEVEL	SIGNAL TYPE	ACT H/L	BUFFER	TO REF. #	CHAN. NO.	ADDRESS LINES (P2-01TO P2-8)	DATA VALUE (P2-09-P2-24)	OUTPUT DRIVE CURRENT	COMMENTS
106	A3J1 - 106	SDI		N	EXT			TTL	IN			NA				
107	A3J1 - 107	SDO		N	A3			TTL	OUT			NA				
108	A3J1 - 108							N/C				NA				
109	A3J1 - 109							N/C				NA				
110	A3J1 - 110			N				N/CN/C				NA				
111	A3J1 - 111	GND		Y	A3			GNDN/C				NA				
112	A3J1 - 112	XMA00		Y	A3			N/C	IN			NA				
113	A3J1 - 113	XMA01		Y	A3			N/C	IN			NA				INTR CARD ADRS
114	A3J1 - 114	XMA02		Y	A3			N/C	IN			NA				INTR CARD ADRS
115	A3J1 - 115	XMA03		Y	A3			N/C	IN			NA				INTR CARD ADRS
116	A3J1 - 116	XMA04		Y	A3			N/C	IN			NA				INTR CARD ADRS
117	A3J1 - 117	XMA05		Y	A3			N/C	IN			NA				INTR CARD ADRS
118	A3J1 - 118	XMA06		Y	A3			N/C	IN			NA				INTR CARD ADRS
119	A3J1 - 119	XMA07		Y	A3			N/C	IN			NA				INTR CARD ADRS
120	A3J1 - 120	XMA08		Y	A3			N/C	IN			NA				INTR CARD ADRS
121	A3J1 - 121	XR/C		Y				N/C				NA				
122	A3J1 - 122	XS/H		Y				N/C				NA				
123	A3J1 - 123	XCE		Y				N/C				NA				
124	A3J1 - 124	XSTS		Y				N/C				NA				
125	A3J1 - 125	XANA_TEST		Y				N/C				NA				
126	A3J1 - 126	CAMMPU_0		O				N/C				NA				
127	A3J1 - 127	GND		Y	A3			N/C				NA				
128	A3J1 - 128	GND		Y	A3			N/CGND				NA				
129	A3J1 - 129			N				N/C				NA				
130	A3J1 - 130			N				N/C				NA				
131	A3J1 - 131			N				N/C				NA				
132	A3J1 - 132			N				N/C				NA				
133	A3J1 - 133			N				N/C				NA				
134	A3J1 - 134			N				N/C				NA				
135	A3J1 - 135			N				N/C				NA				
136	A3J2 - 001	JOUT_25		N	A2	28/O		AS32 N/C	FT			JOUT_25				REF ONLY
137	A3J2 - 002	JOUT_26		N	A2	28/O		AS32 N/C	FT			JOUT_26				REF ONLY
138	A3J2 - 003	FB09		N	A2	28/0		AS23 N/C	FT			FB09				REF ONLY
139	A3J2 - 004	FB10		N	A2	28/O		AS32 N/C	FT			FB10				REF ONLY
140	A3J2 - 005	JOUT_01		N	A2	28/O		AS32 N/C	FT			JOUT_01				REF ONLY
141	A3J2 - 006	JOUT_02		N	A2	28/O		AS32 N/C	FT			JOUT_02				REF ONLY
142	A3J2 - 007	JOUT_03		N	A2	28/0		AS32 N/C	FT			JOUT_03				REF ONLY
143	A3J2 - 008	GND			A3			GND								

ITEM	CON PIN	SIGNAL NAME	INPUT/ OUTPUT	MONITOR	SOURCE	CONTROL	SIGNAL LEVEL	SIGNAL TYPE	ACT H/L	BUFFER	TO REF . #	CHAN. NO.	ADDRESS LINES (P2-01TO P2-8)	DATA VALUE (P2-09-P2-24)	OUTPUT DRIVE CURRENT	COMMENTS
144	A3J2 - 009			N	A2	28/O		AS32 N/C	IN			JOUT_O4				REF ONLY
145	A3J2 - 010	JOUT_05		N	A2	28/O		AS32 N/C	IN			JOUT_05				REF ONLY
146	A3J2 - 011	JOUT_06		N	A2	28/O		AS32 N/C	IN			JOUT_06				REF ONLY
147	A3J2 - 012	JOUT_07		N	A2	28/O		AS32 N/C	IN			JOUT_07				REF ONLY
148	A3J2 - 013	JOUT_08		N	A2	28/O		AS32 N/C	IN			JOUT_08				REF ONLY
149	A3J2 - 014	JOUT_09		N	A2	28/O		AS32 N/C	IN			JOUT_09				REF ONLY
150	A3J2 - 015	JOUT_10		N	A2	28/O		AS32 N/C	IN			JOUT_10				REF ONLY
151	A3J2 - 016	GND			A3			GND								
152	A3J2 - 017	JOUT_11		N	A2	28/O		AS32N/C	FT			JOUT)11				REF ONLY
153	A3J2 - 018	JOUT_12		N	A2	28/O		AS32N/C	FT			JOUT_12				REF ONLY
154	A3J2 - 019	JOUT_13		N	A2	28/O		AS32N/C	FT			JOUT_13				REF ONLY
155	A3J2 - 020	JOUT_14		N	A2	28/O		AS32N/C	FT			JOUT_14				REF ONLY
156	A3J2 - 021	JOUT_15		N	A2	28/O		AS32N/C	FT			JOUT_15				REF ONLY
157	A3J2 - 022	JOUT_16		N	A2	28/O		AS32N/C	FT			JOUT_16				REF ONLY
158	A3J2 - 023	FB01		N	A2	28/O		AS32N/C	FT			FB01				REF ONLY
159	A3J2 - 024	GND		Y	A3			GND								
160	A3J2 - 025	FB02		N	A2	28/O		AS32N/C	FT			FB02				REF ONLY
161	A3J2 - 026	FB03		N	A2	28/O		AS32 N/C	FT			FB03				REF ONLY
162	A3J2 - 027	FB04		N	A2	28/O		AS32 N/C	FT			FB04				REF ONLY
163	A3J2 - 028	FB05		N	A2	28/O		AS32 N/C	FT			FB05				REF ONLY
164	A3J2 - 029	FB06		N	A2	28/O		AS32 N/C	FT			FB06				REF ONLY
165	A3J2 - 030	FB07		N	A2	28/O		AS32 N/C	FT			FB07				REF ONLY
166	A3J2 - 031	FB08		N	A2	28/O		AS32 N/C	FT			FB08				REF ONLY
167	A3J2 - 032	GND		Y	A3			GND	FT							
168	A3J2 - 033	LD73		N	A1			TTL N/C	FT			LD73				REF ONLY
169	A3J2 - 034	LD74		N	A1			TTL N/C	FT			LD74				REF ONLY
170	A3J2 - 035	LD75		N	A1			TTL N/C	FT			LD75				REF ONLY
171	A3J2 - 036	LD76		N	A1			TTL N/C	FT			LD76				REF ONLY
172	A3J2 - 037	LD77		N	A1			TTL N/C	FT			LD77				REF ONLY
173	A3J2 - 038	LD78		N	A1			TTL N/C	FT			LD78				REF ONLY
174	A3J2 - 039	LD79		N	A1			TTL N/C	FT			LD79				REF ONLY
175	A3J2 - 040	GND		Y	A3			GND	FT							
176	A3J2 - 041	LD80		N	A1			TTL N/C	FT			LD80				REF ONLY
177	A3J2 - 042	LD81		N	A1			TTL N/C	FT			LD81				REF ONLY
178	A3J2 - 043	LD82		N	A1			TTL N/C	FT			LD82				REF ONLY
179	A3J2 - 044	LD83		N	A1			TTL N/C	FT			LD83				REF ONLY
180	A3J2 - 045	LD84		N	A1			TTL N/C	FT			LD84				REF ONLY
181	A3J2 - 046	LD85		N	A1			TTL N/C	FT			LD85				REF ONLY

ITEM	CON PIN	SIGNAL NAME	INPUT/ OUTPUT	MONITOR	SOURCE	CONTROL	SIGNAL LEVEL	SIGNAL TYPE	ACT H/L	BUFFER	TO REF. #	CHAN. NO.	ADDRESS LINES (P2-01TO P2-8)	DATA VALUE (P2-09-P2-24)	OUTPUT DRIVE CURRENT	COMMENTS
182	A3J2 - 047	LD86		N	A1			TTL N/C	FT			LD86				REF ONLY
183	A3J2 - 048	GND		Y	A3			GND	FT							
184	A3J2 - 049	LD87		N	A1			TTL N/C	FT			LD87				REF ONLY
185	A3J2 - 050	LD88		N	A1			TTL N/C	FT			LD88				REF ONLY
186	A3J2 - 051	LD89		N	A1			TTL N/C	FT			LD89				REF ONLY
187	A3J2 - 052	LD90		N	A1			TTL N/C	FT			LD90				REF ONLY
188	A3J2 - 053	LD91		N	A1			TTL N/C	FT			LD91				REF ONLY
189	A3J2 - 054	LD92		N	A1			TTL N/C	FT			LD92				REF ONLY
190	A3J2 - 055	GND		Y	A3			GND	FT							
191	A3J2 - 056	LD93		N	A1			TTL N/C	FT			LD93				REF ONLY
192	A3J2 - 057	LD94		N	A1			TTL N/C	FT			LD94				REF ONLY
193	A3J2 - 058	LD95		N	A1			TTL N/C	FT			LD95				REF ONLY
194	A3J2 - 059	LD96		N	A1			TTL N/C	FT			LD96				REF ONLY
195	A3J2 - 060	LD97		N	A1			TTL N/C	FT			LD97				REF ONLY
196	A3J2 - 061	LD98		N	A1			TTL N/C	FT			LD98				REF ONLY
197	A3J2 - 062	LD99		N	A1			TTL N/C	FT			LD99				REF ONLY
198	A3J2 - 063	LD100		N	A1			TTL N/C	FT			LD100				REF ONLY
199	A3J2 - 064	GND			A3			GND	Y							
200	A3J2 - 065	JIN_62		N	EXT	G/0		AS32 N/C	FT							REF ONLY
201	A3J2 - 066	JIN_63		N	EXT	G/0		AS32 N/C	FT							REF ONLY
202	A3J2 - 067							N/C								
203	A3J2 - 068	JIN_64		N	EXT	G/0		AS32 N/C	FT							REF ONLY
204	A3J2 - 069	JIN_65		N	EXT	G/0		AS32 N/C	FT							REF ONLY
205	A3J2 - 070	JIN_66		N	EXT	G/0		AS32 N/C	FT							REF ONLY
206	A3J2 - 071	+12V		N	A8			+12V	FT							
207	A3J2 - 072	AGND+12V_RTN		N	A4			AGND	FT							
208	A3J2 - 073	+28V		N				+28V	FT							
209	A3J2 - 074	+28V_RTN		Y				+28V-RTN	FT							
210	A3J2 - 075	+28V		N				+28V	FT							
211	A3J2 - 076	+28V_RTN		Y				+28V_RTN	FT							
212	A3J2 - 077	+28V		N				+28V	FT							
213	A3J2 - 078	+28V_RTN		Y				+28V_RTN	FT							
214	A3J2 - 079	+5V		Y				+5V	Y							
215	A3J2 - 080	GND		Y	A3			GND	Y							
216	A3J2 - 081	GND		Y	A3			GND	Y							
217	A3J2 - 082	+5V		Y	A3			+5V	Y							
218	A3J2 - 083	+5V		Y	A3			+5V	Y							

ITEM	CON PIN	SIGNAL NAME	INPUT/ OUTPUT	MONITOR	SOURCE	CONTROL	SIGNAL LEVEL	SIGNAL TYPE	ACT H/L	BUFFER	TO REF. #	CHAN. NO.	ADDRESS LINES (P2-01TO P2-8)	DATA VALUE (P2-09-P2-24)	OUTPUT DRIVE CURRENT	COMMENTS
219	A3J2 - 084	GND		Y	A3			GND	Y							
220	A3J2 - 085	+15V+15V_D		Y	A3			+15V	Y							
221	A3J2 - 086	GND+15V_D_ RTN		Y	A3			GND	Y							
222	A3J2 - 087	AGND+15V_A _RTN		N				AGND	FT							
223	A3J2 - 088	+15V+15V_A		Y	A3			+15V	Y							
224	A3J2 - 089							N/C								
225	A3J2 - 090	-15V		Y	A3			-15V	Y							
226	A3J2 - 091	-15V_RTN		N				AGND	FT							
227	A3J2 - 092	AGND-15V_RTN		N				AGND	FT							
228	A3J2 - 093	-15V		Y				-15V	Y							
229	A3J2 - 094	GND		Y	A3			GND	Y							
230	A3J2 - 095	GND		Y	A3			GND	Y							
231	A3J2 - 096							N/C								
232	A3J2 - 097							N/C								
233	A3J2 - 098							N/C								
234	A3J2 - 099							N/C								
235	A3J2 - 100							N/C								
236	A3J2 - 101							N/C								
237	A3J2 - 102							N/C								
238	A3J2 - 103							N/C								
239	A3J2 - 104							N/C								
240	A3J2 - 105	FUELBUF,CH07_OUT		N				ASD10N/C	O			CH07	006H		+/1 10V	REF ONLY
241	A3J2 - 106							N/C								
242	A3J2 - 107							N/C								
243	A3J2 - 108	GND		Y	A3			GNDN/C								
244	A3J2 - 109							N/C								
245	A3J2 - 110							N/C								
246	A3J2 - 111							N/C								
247	A3J2 - 112	GND		Y	A3			GNDN/C								
248	A3J2 - 113	CH23A		I/O				N/C	FT			CH23A	1C7H			REF ONLY
249	A3J2 - 114	CH23B		I/O				N/C	FT			CH23B	1C7H			REF ONLY
250	A3J2 - 115	GND		Y	A3			GNDN/C	Y							
251	A3J2 - 116							N/C								
252	A3J2 - 117							N/C								
253	A3J2 - 118	GND		Y	A3			GNDN/C								

ITEM	CON PIN	SIGNAL NAME	INPUT/ OUTPUT	MONITOR	SOURCE	CONTROL	SIGNAL LEVEL	SIGNAL TYPE	ACT H/L	BUFFER	TO REF. #	CHAN. NO.	ADDRESS LINES (P2-01TO P2-8)	DATA VALUE (P2-09-P2-24)	OUTPUT DRIVE CURRENT	COMMENTS
254	A3J2 - 119	CH45A		I/O				N/C	FT			CH45A	177H			REF ONLY
255	A3J2 - 120	CH45B		I/O				N/C	FT			CH45B	177H			REF ONLY
256	A3J2 - 121	GND		Y	A3			GNDN/C	Y							
257	A3J2 - 122	CH46A		I/O				N/C	FT			CH46A	1B7H			REF ONLY
258	A3J2 - 123	CH46B		I/O				N/C	FT			CH46B	1B7H			REF ONLY
259	A3J2 - 124	GND		Y	A3			GNDN/C	Y							
260	A3J2 - 125	CH47A		I/O	A2			N/C	FT			CH47A	1F7H			REF ONLY
261	A3J2 - 126	CH47B		I/O	A2			N/C	FT			CH47B	1F7H			REF ONLY
262	A3J2 - 127							N/C								
263	A3J2 - 128							N/C								
264	A3J2 - 129							N/C								
265	A3J2 - 130							N/C								
266	A3J2 - 131							N/C								
267	A3J2 - 132							N/C								
268	A3J2 - 133							N/C								
269	A3J2 - 134							N/C								
270	A3J2 - 135							N/C								
271	A3J3 - 01	1553 BUSA HIGH TWC-78-11553CHA+			A3				S							
272	A3J3 - 02	1553 BUSA LOW TWC 78-11553CHA-			A3				S							
273	A3J3 - 03	GND/SHIELD			A3				S							
274	A3J3 - 04	GND/SHIELD			A3				S							
275	A3J3 - 05	1553 BUS B HIGH TWC-78-11553CHB+			A3				S							
276	A3J3 - 06	1553 BUS B LOW TWC-78-11553CHB-			A3				S							
277	A3J4 - 01	5V			A4				Y							
278	A3J4 - 02	5V POS GNDGND			A4				Y							
279	A3J4 - 04	5V			A4				Y							
280	A3J4 - 05	5V POS GNDGND			A4				Y							
281	A3J4 - 06	N/C						N/C								
282	A3J4 - 07	5V			A4				Y							
283	A3J4 - 08	GND			A4				Y							

ITEM	CON PIN	SIGNAL NAME	INPUT/ OUTPUT	MONITOR	SOURCE	CONTROL	SIGNAL LEVEL	SIGNAL TYPE	ACT H/L	BUFFER	TO REF. #	CHAN. NO.	ADDRESS LINES (P2-01TO P2-8)	DATA VALUE (P2-09-P2-24)	OUTPUT DRIVE CURRENT	COMMENTS
284	A3J4 - 09	N/C						N/C								
285	A3J4 - 10	POS 15V+15V_D			A4				FT							
286	A3J4 - 11	15V POS GND+15V_D_ RTN			A4				Y							
287	A3J4 - 12	N/C						N/C								
288	A3J4 - 13	POS 15V+15V_A			A4				Y							
289	A3J4 - 14	15V POS GND+15V_A_ RTN			A4				Y							
290	A3J4 - 15	N/C						N/C								
291	A3J4 - 16	NEG 15V-15V			A4				Y							
292	A3J4 - 17	15V NEG GND-15V_RTN			A4				Y							
293	A3J4 - 18	N/C						N/C								
294	A3J4 - 19							N/C								
295	A3J4 - 20	NEG15 V-15V			A4				Y							
296	A3J4 - 21	15V NEG GND-15V_RTN			A4				Y							
297	A3J4 - 22	N/C						N/C								
298	A3J4 - 23	N/C+12V														
299	A3J4 - 24	N/C+12V_RTN														
300	A3J4 - 25	N/C						N/C								
301	A3J4 - 26	28V POWER+28V			A9				FT							
302	A3J4 - 27	PWR SUPPLY +28V_ RTN			W2				Y							
303	A3J4 - 28	N/C						N/C								
304	A3J4 - 29	+28V28V POWER			A9				FT							
305	A3J4 - 30	+28V_RTN28 Return			W2				Y							
306	A3J4 - 31	N/C						N/C								
307	A3J4 - 32	+28V28V POWER			A9				FT							
308	A3J4 - 33	28 Return+28V_R TN			W2				Y							
309	A3J4 - 34	N/C						N/C								

ITEM	CON PIN	SIGNAL NAME	INPUT/ OUTPUT	MONITOR	SOURCE	CONTROL	SIGNAL LEVEL	SIGNAL TYPE	ACT H/L	BUFFER	TO REF. #	CHAN. NO.	ADDRESS LINES (P2-01TO P2-8)	DATA VALUE (P2-09-P2-24)	OUTPUT DRIVE CURRENT	COMMENTS
310	A3J4 - 35	N/C						N/C								
311	A3J4 - 36	N/C						N/C								
312	A3J4 - 37	N/C						N/C								
313	A3J5 - 01	232TXD			A3				OUT							
314	A3J5 - 02	232RXD			A3				IN							
315	A3J5 - 03	GND			A3			GND								
316	A3J5 - 04	N/C						N/C								
317	A3J5 - 05	N/C						N/C								
318	A3J5 - 06	422RXDA+			A3				IN							
319	A3J5 - 07	422RXDA-			EXT				IN							
320	A3J5 - 08	GND						GND								
321	A3J5 - 09	GND						GND								
322	A3J5 - 10	422TXDA+			A3				OUT							
323	A3J5 - 11	422TXDA-			A3				OUT							
324	A3J5 - 12	422RXDB+			EXT				IN							
325	A3J5 - 13	422RXDB-			EXT				IN							
326	A3J5 - 14	GND						GND								
327	A3J5 - 15	GND						GND								
328	A3J5 - 16	422TXDB+			A3				OUT							
329	A3J5 - 17	422TXDB-			A3				OUT							
330	A3J5 - 18	N/C						N/C								
331	A3J5 - 19	N/C422 TXDD+														
332	A3J5 - 20	422 RXDC+														
333	A3J5 - 21	422 RXDC-														
334	A3J5 – 22	GND						GND								
335	A3J5 - 23	GND						GND								
336	A3J5 – 24	422 TXDC +														
337	A3J5 - 25	422 RXDC -														
338	A3J5 - 26	422RXDD+232 BTXD			EXT				IN							
339	A3J5 - 27	422RXDD- 232BRXD			EXT				IN							
340	A3J5 - 28	GND			A3			GND	FT							
341	A3J5 - 29	GND						GND								
342	A3J5 - 30	422 TXDD+														
343	A3J5 - 31	422 TXDD -														
344	A3J5 - 32	GND						GND								
345	A3J5 - 33	485 -														

ITEM	CON PIN	SIGNAL NAME	INPUT/ OUTPUT	MONITOR	SOURCE	CONTROL	SIGNAL LEVEL	SIGNAL TYPE	ACT H/L	BUFFER	TO REF. #	CHAN. NO.	ADDRESS LINES (P2-01TO P2-8)	DATA VALUE (P2-09-P2-24)	OUTPUT DRIVE CURRENT	COMMENTS
346	A3J5 - 34	485 +														
347	A3J5 - 35	N/C						N/C								
348	A3J5 - 36	N/C						N/C								
349	A3J5 - 37	N/C						N/C								
350	A3J6 - 01	SCLK			EXT			TTL	EXT							
351	A3J6 - 02	GND			A3			GND	OUT							
352	A3J6 - 03	MODE			EXT			TTL	IN							
353	A3J6 - 04							N/C								
354	A3J6 - 05	ISPEN#			EXT			TTL	IN							
355	A3J6 - 06	SDI			EXT			TTL	IN							
356	A3J6 - 07	SDO			A3			TTL	OUT							
357	A3J6 - 08	+5V			A3			+5V	OUT							