Wheeled First Unit Geometry - HFig1a

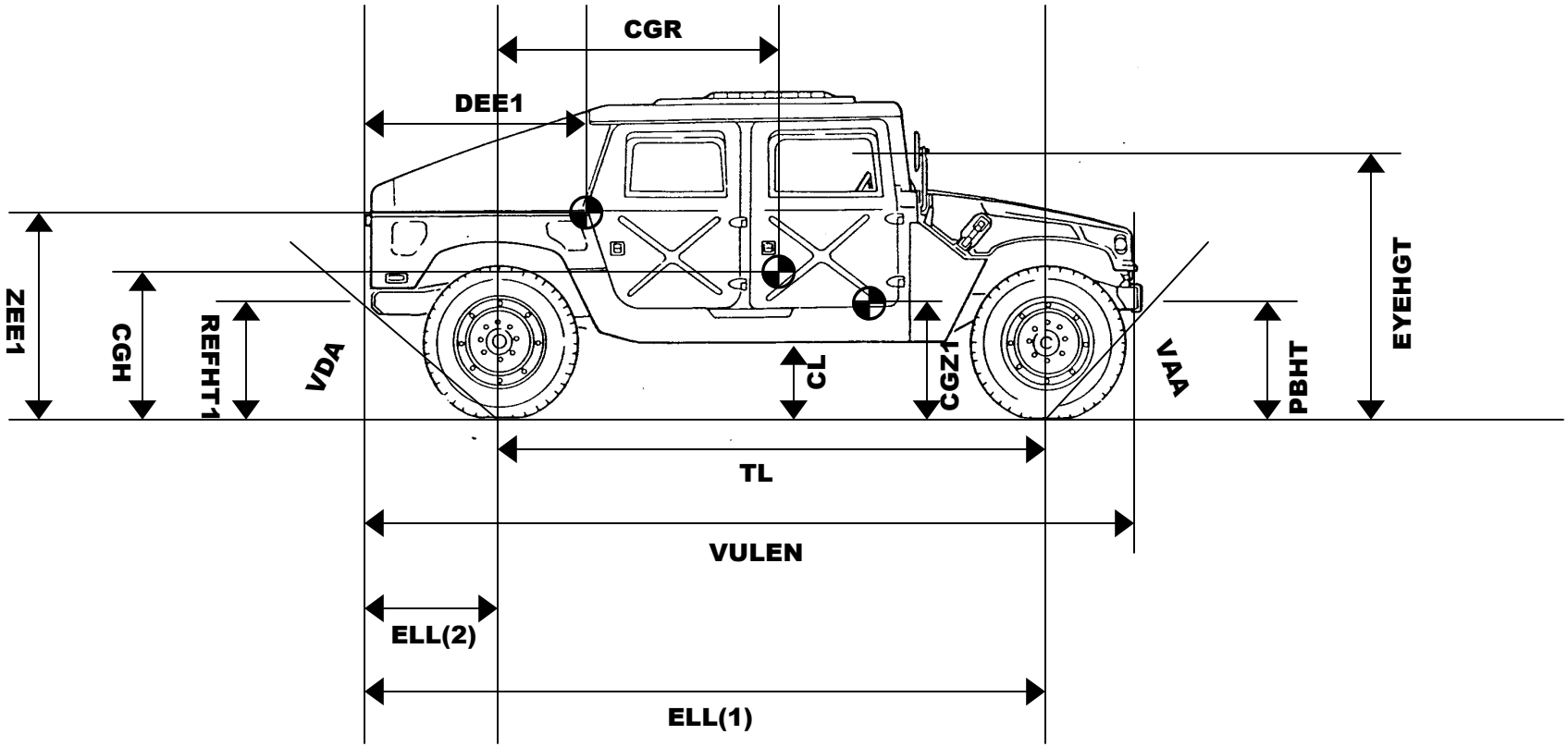

NOTE: CGH is the system CG height (combination of unloaded, CGZ1, and payload, ZEE1 CG's.

Wheeled First Unit Geometry - HFig1b

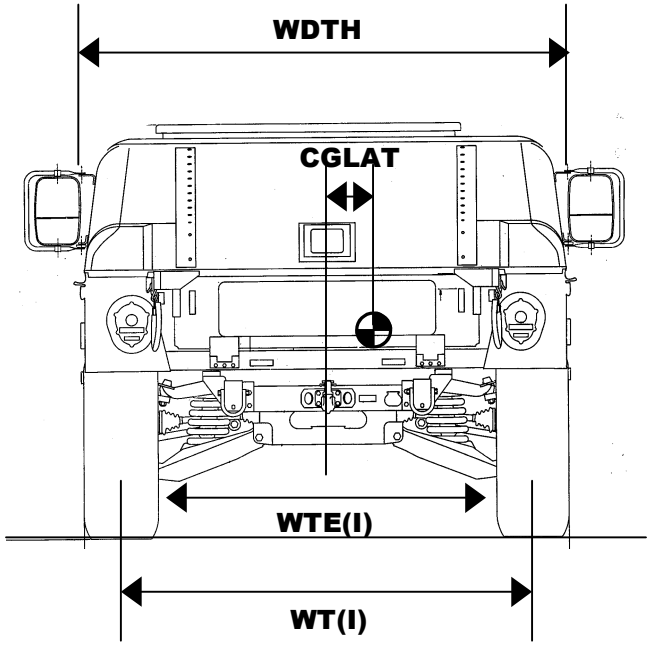

Wheeled First Unit Geometry - HFig1c

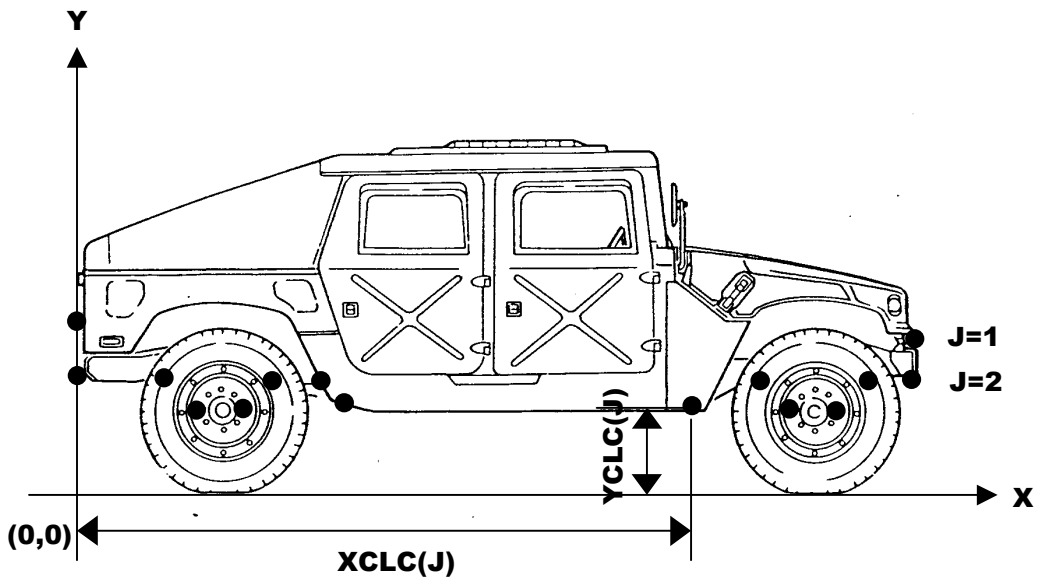

NOTE: Bottom profile points measured from the hitch but begin at the front of the vehicle I.e., XCLC(1) is the maximum distance.

Wheeled First Unit Geometry - HFig1d

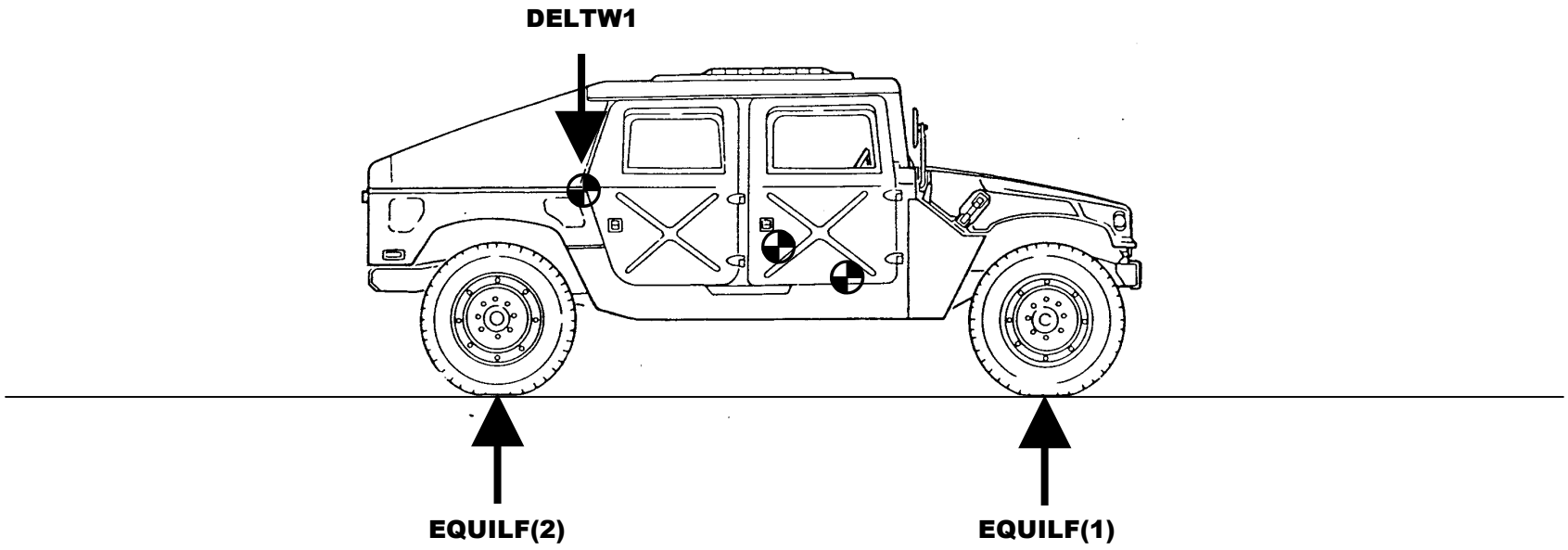

Wheeled First Unit Geometry - HFig1e

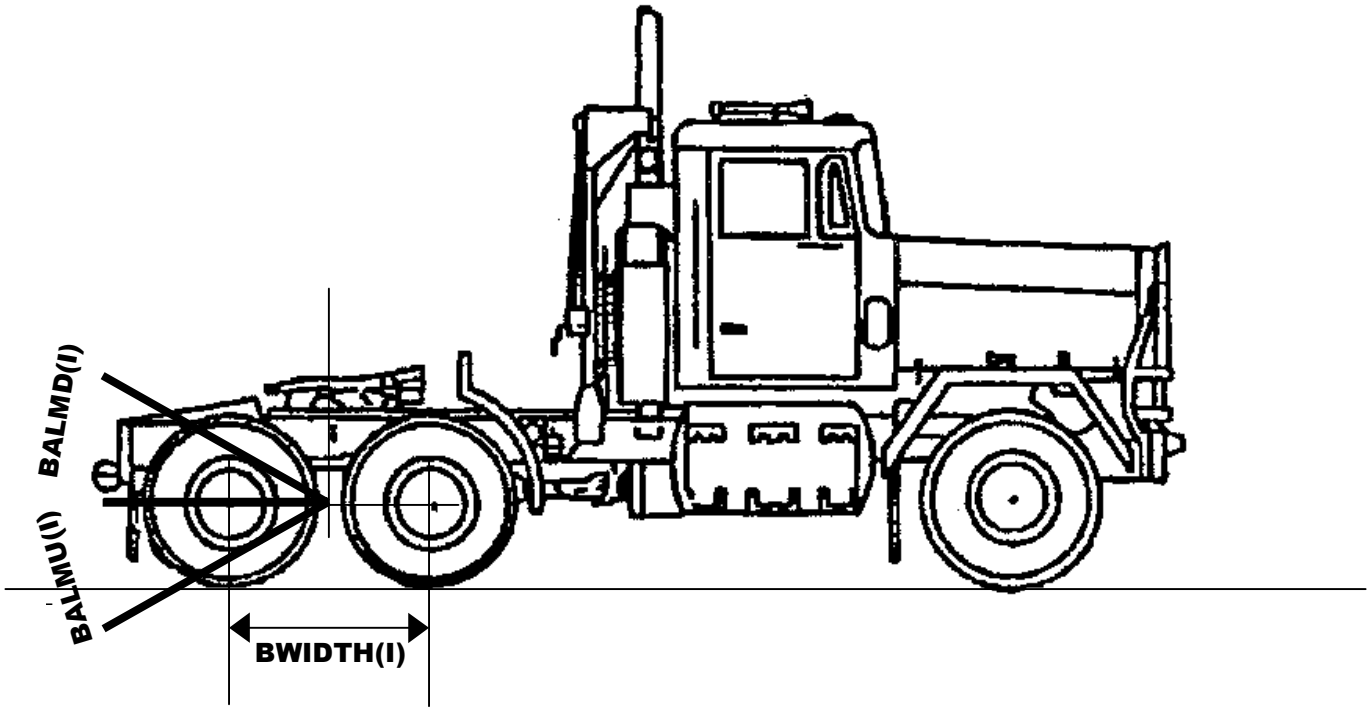

Unsprung (U) Suspension Type - DFiga

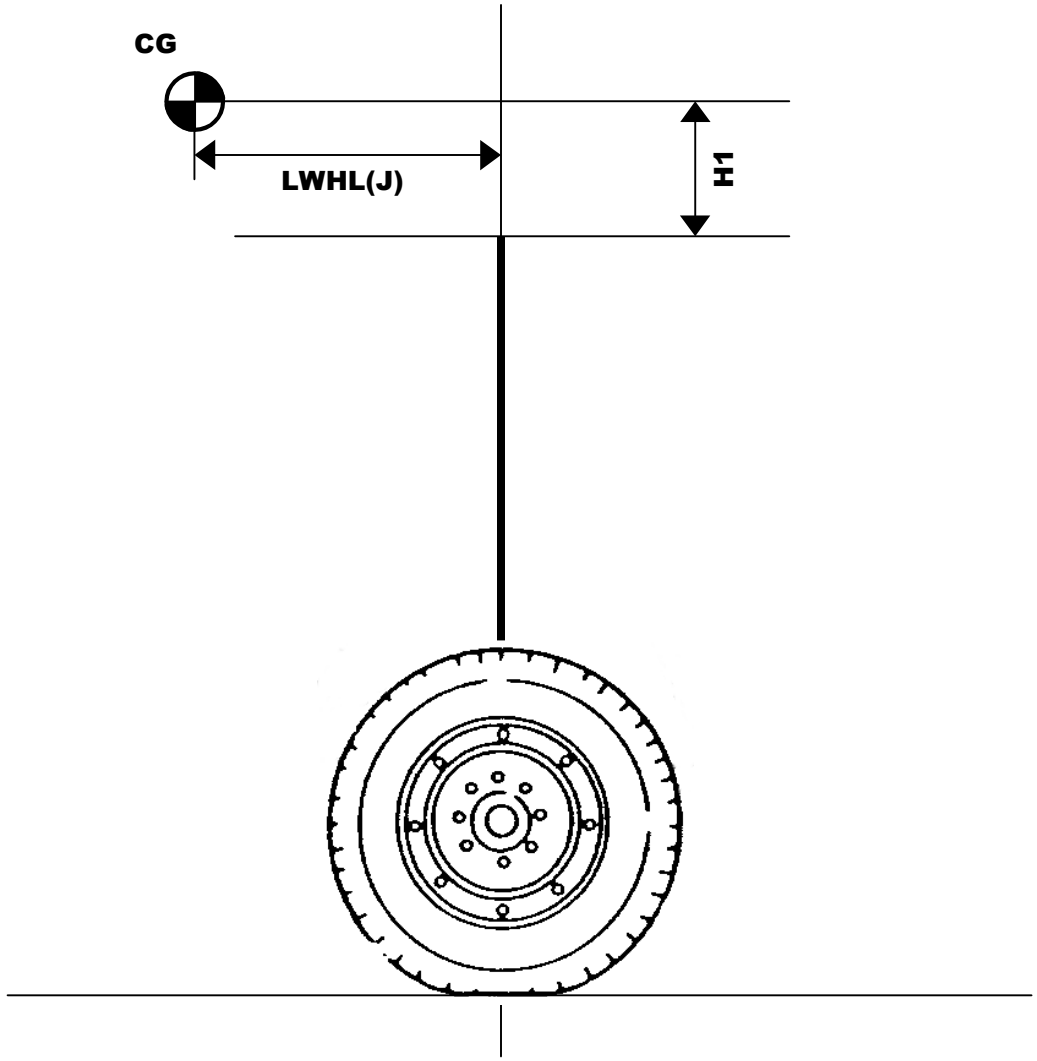

Independent (I) Suspension Type - DFigb

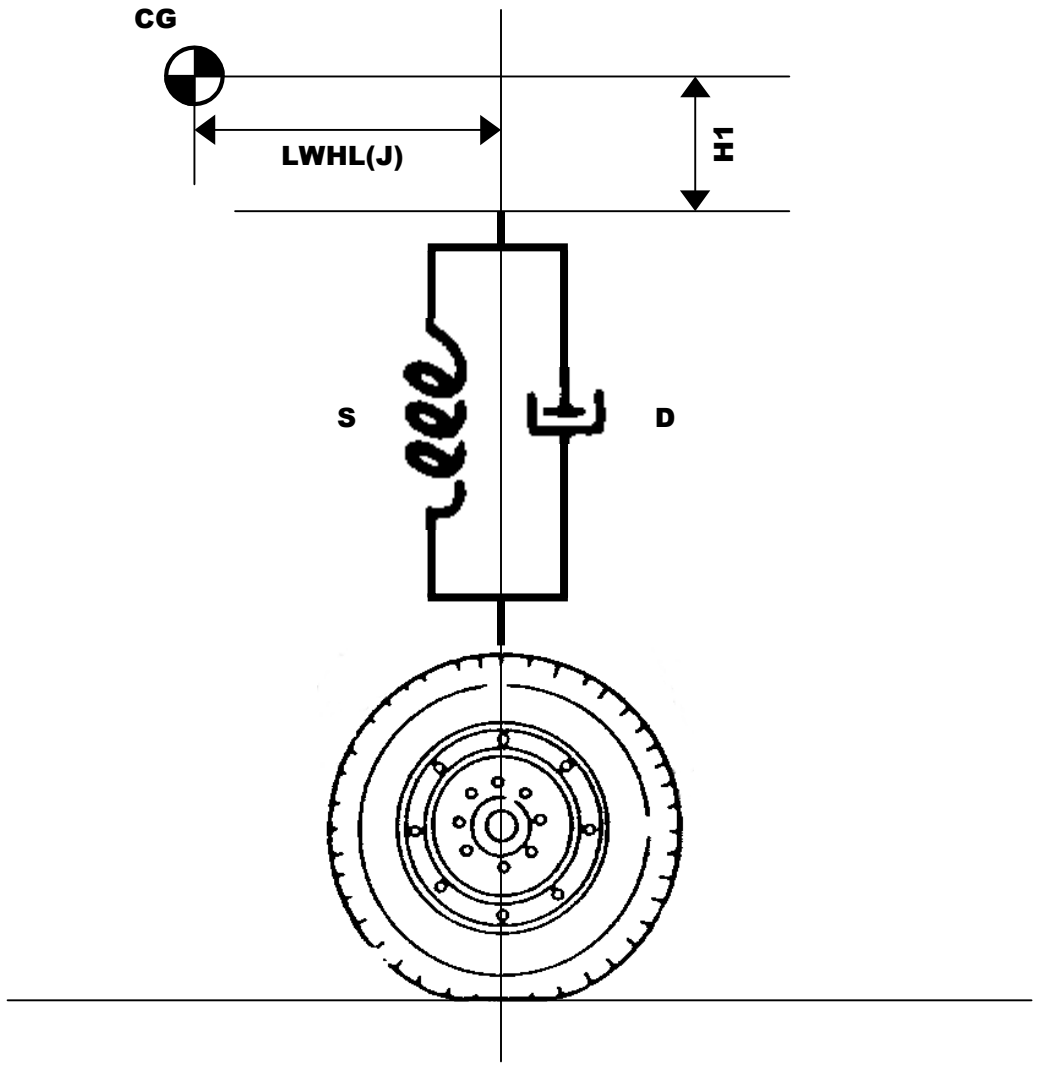

Walking Beam (WB) Suspension Type - DFigc

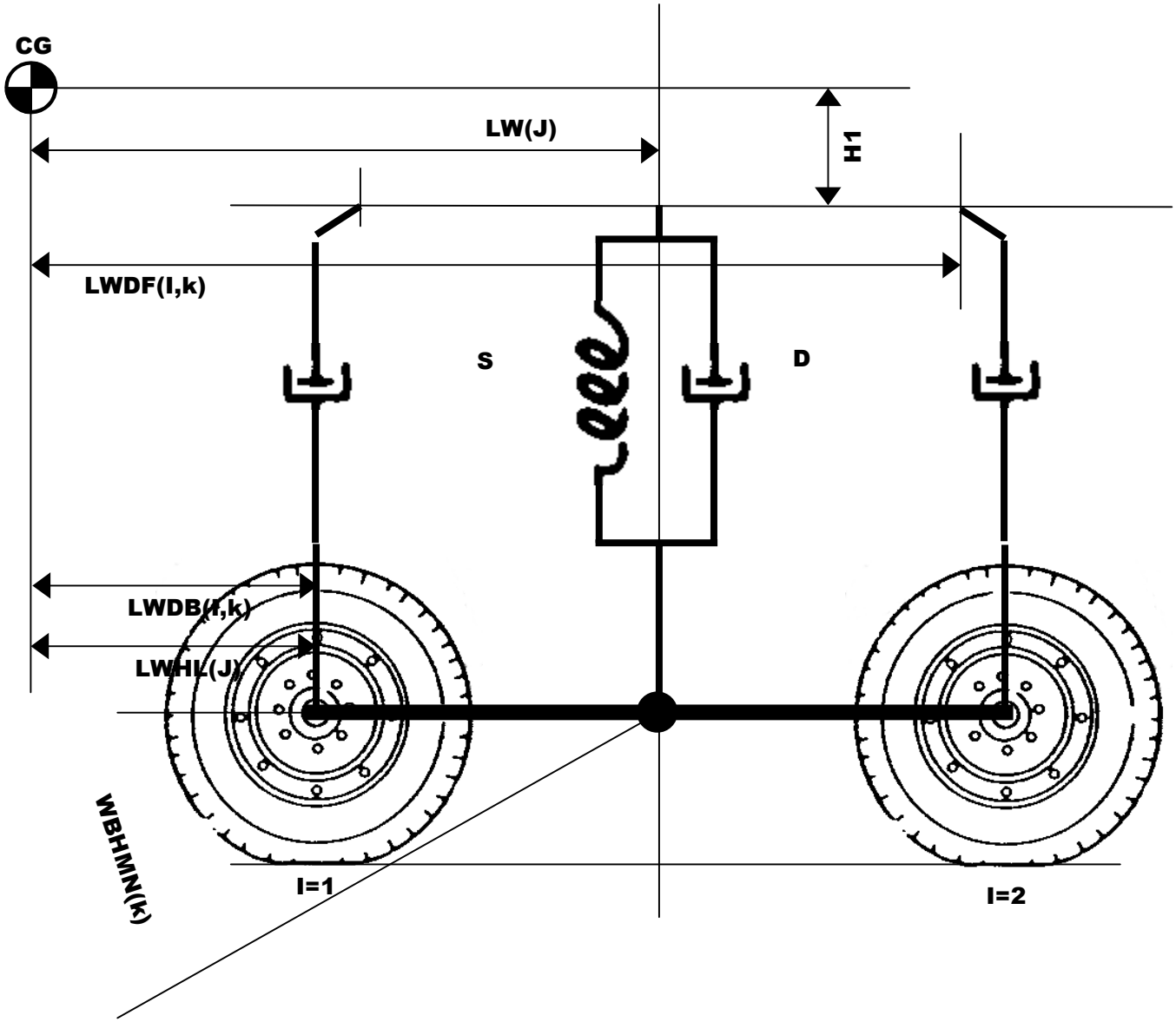

NOTE: k=walking beam suspension number, I=1 is fore, I=2 is aft.

Bogie (B) Suspension Type - DFigd

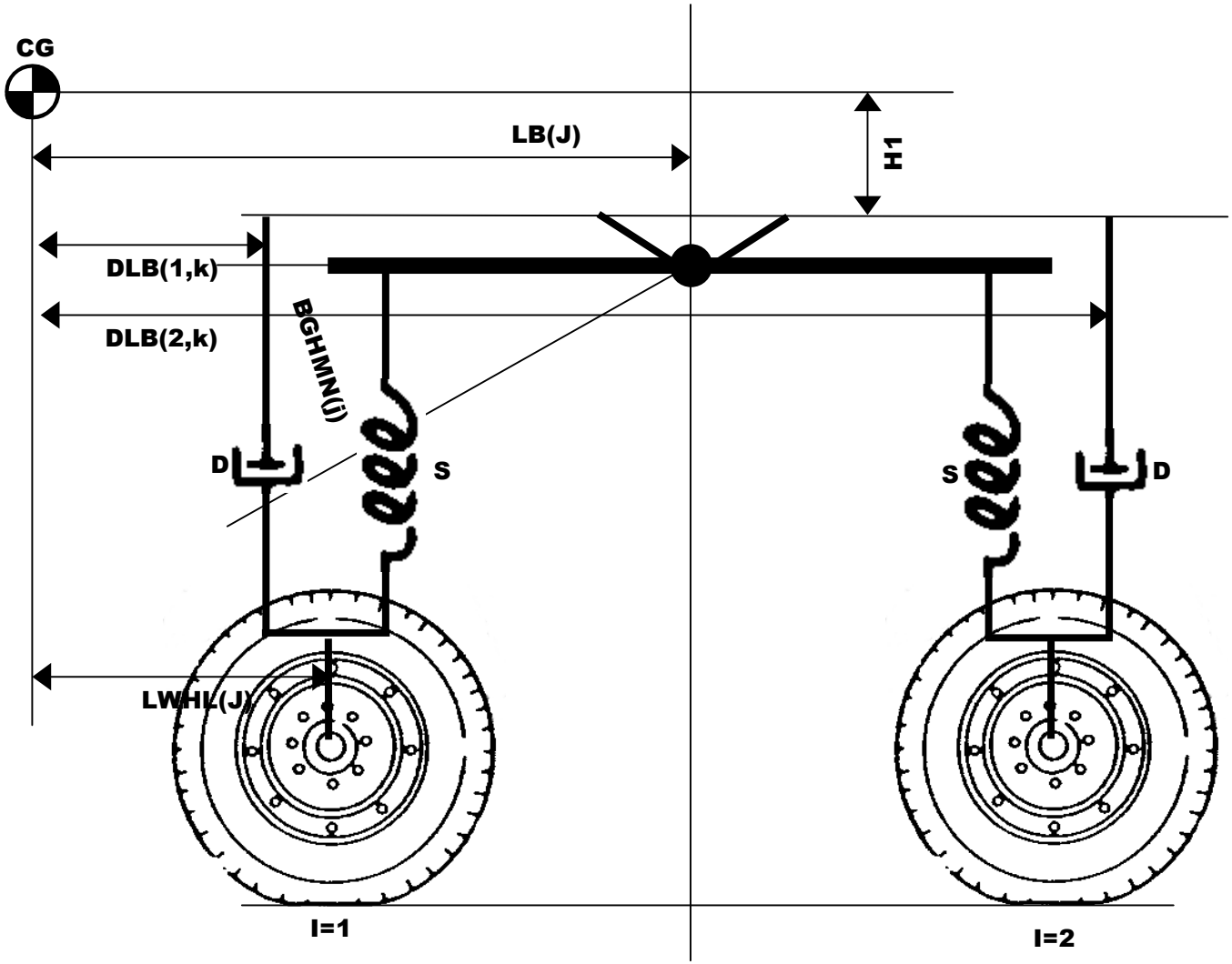

NOTE: k=walking beam suspension number, I=1 is fore, I=2 is aft.

Wheeled Second Unit Geometry - HFig2a

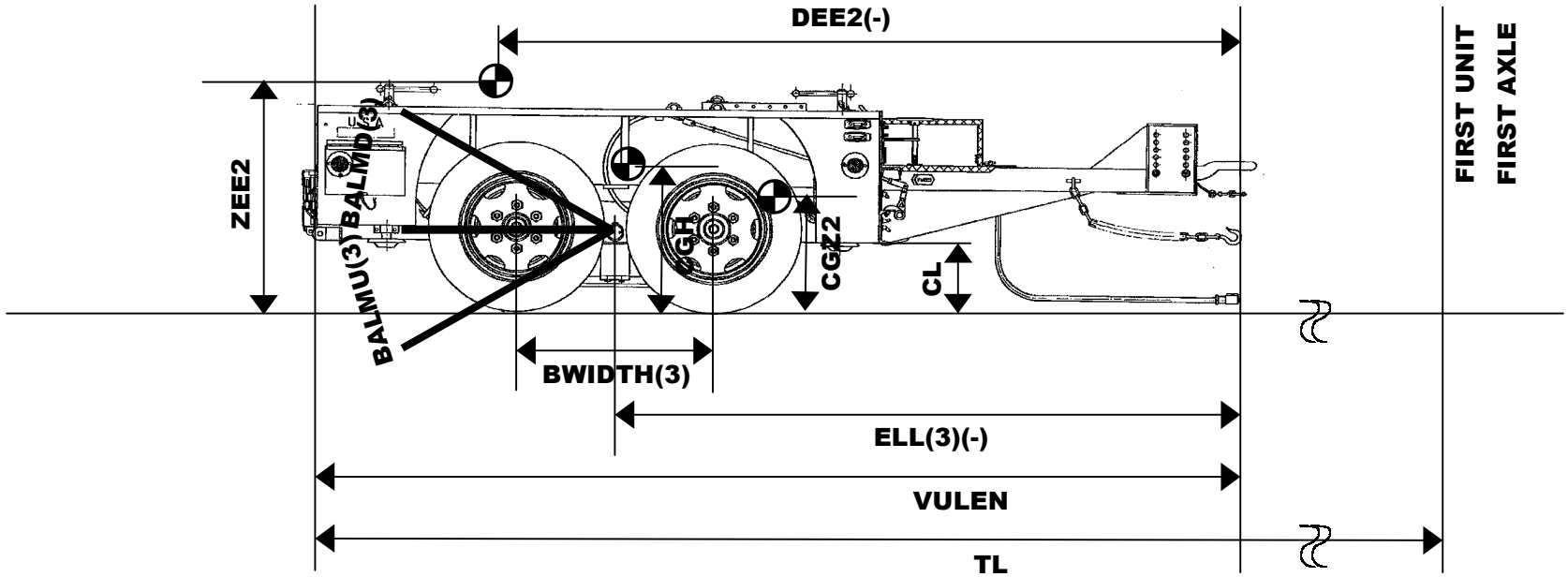

NOTE: CGH is the system CG height (combination of unloaded, CGZ2, and payload, ZEE2 CG's.

Wheeled Second Unit Geometry - HFig2b

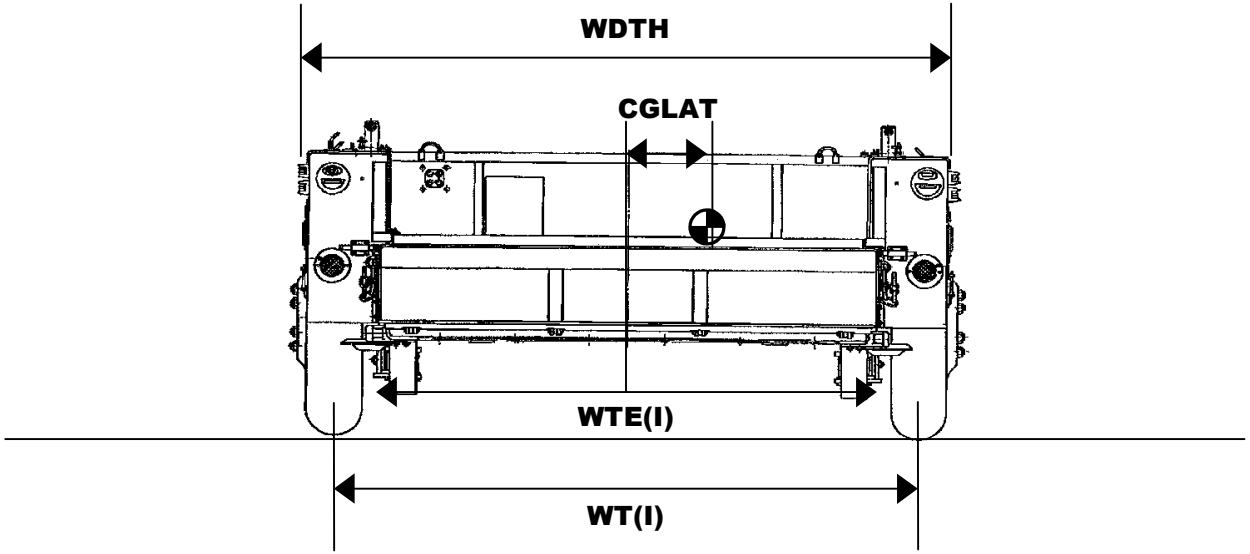

Wheeled Second Unit Geometry - HFig2c

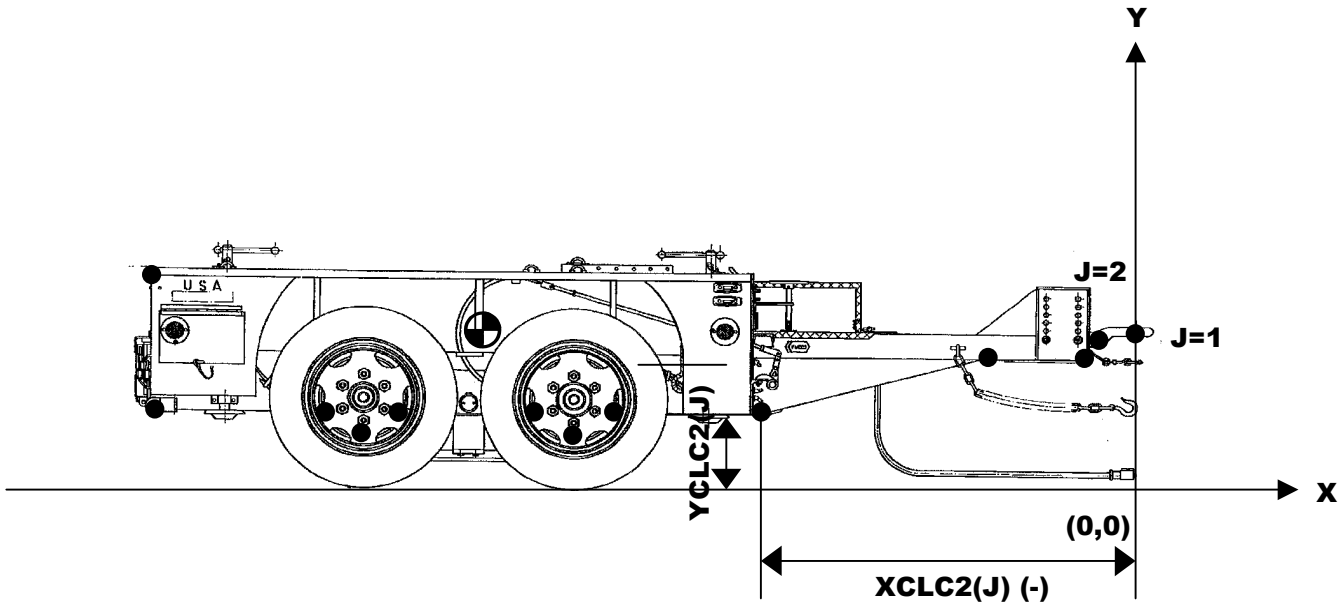

NOTE: Bottom profile points measured from the hitch, therefore all XCLC2(J) values are negative.

Wheeled Second Unit Geometry - HFig2d

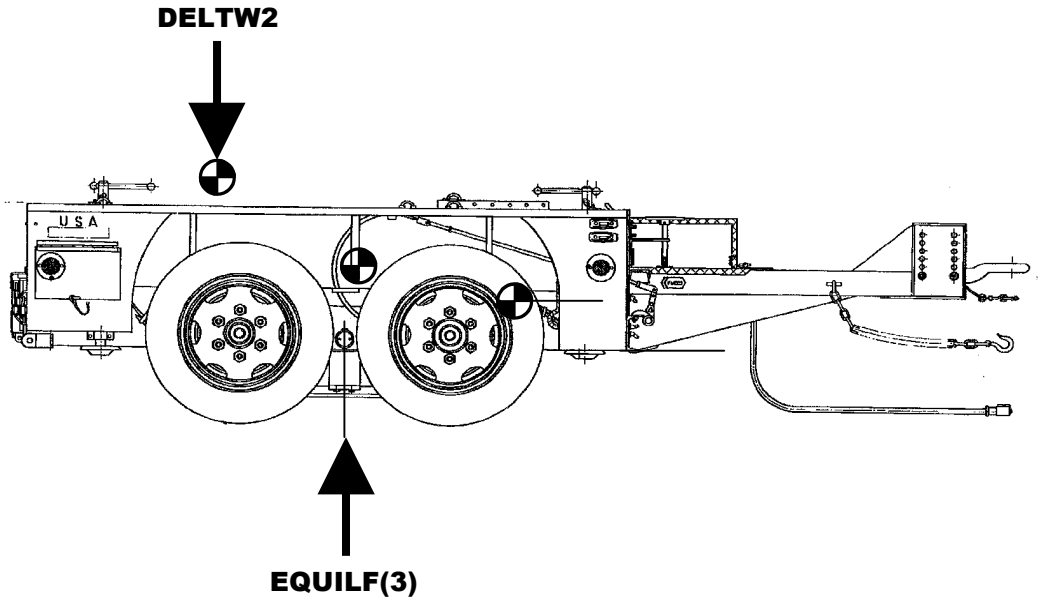

FIRST UNI
FIRSTAXLE

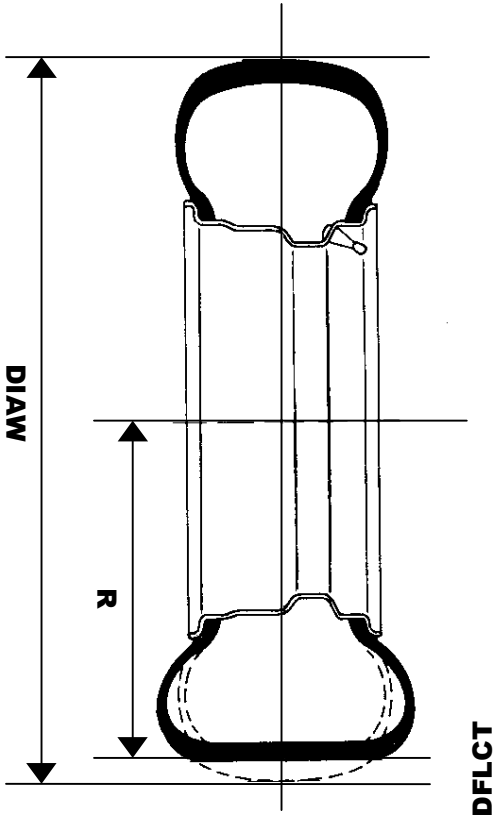

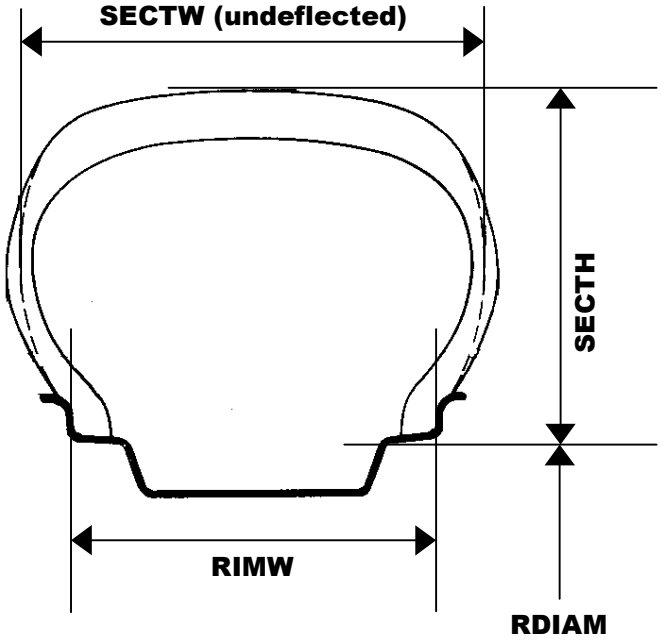

NOTE: SECTH=0.5(DIAW-RDIAM). %deflection = DFLCT/SECTH.

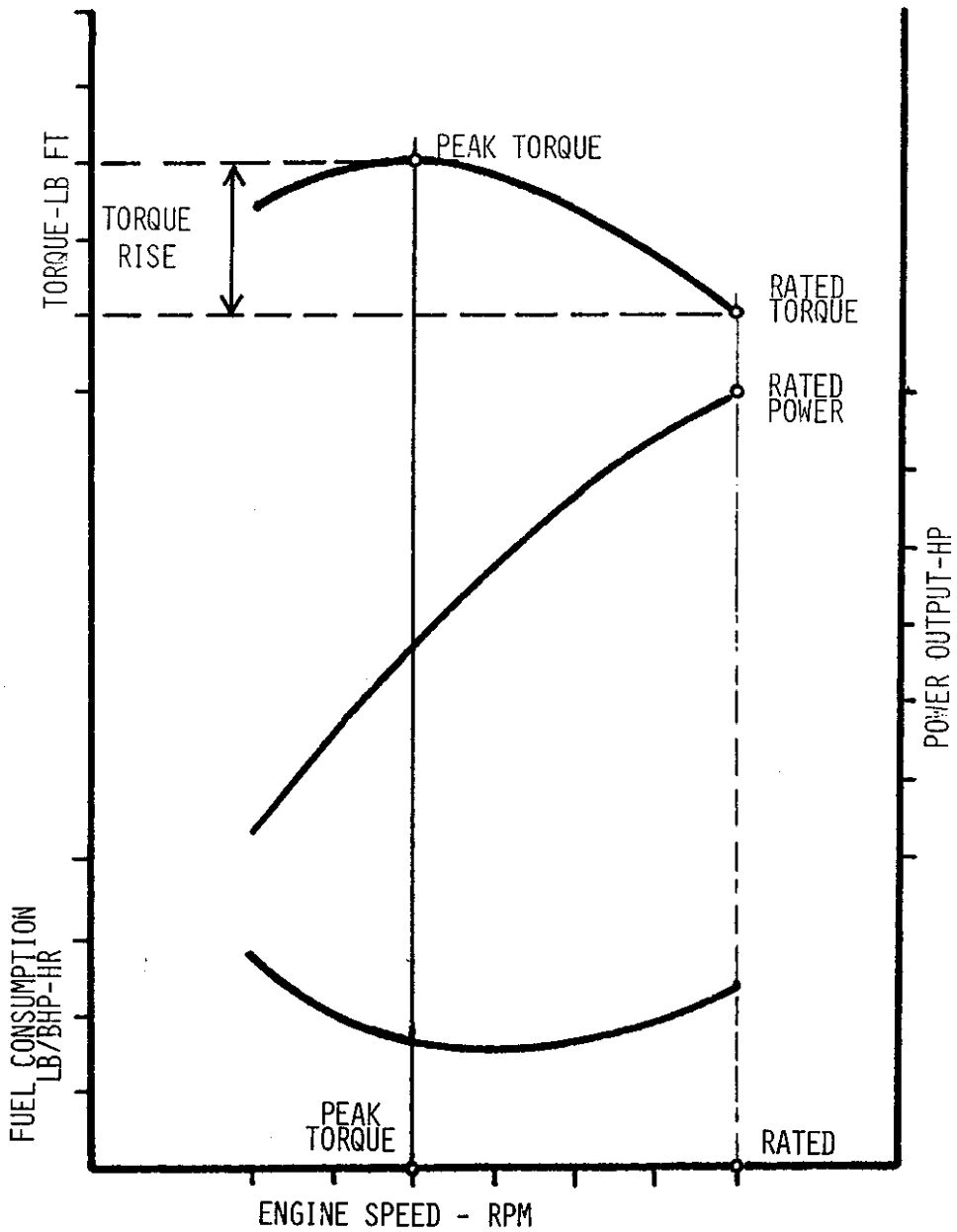

Figure 6-3. Engine Performance Chart - Torque Rise.

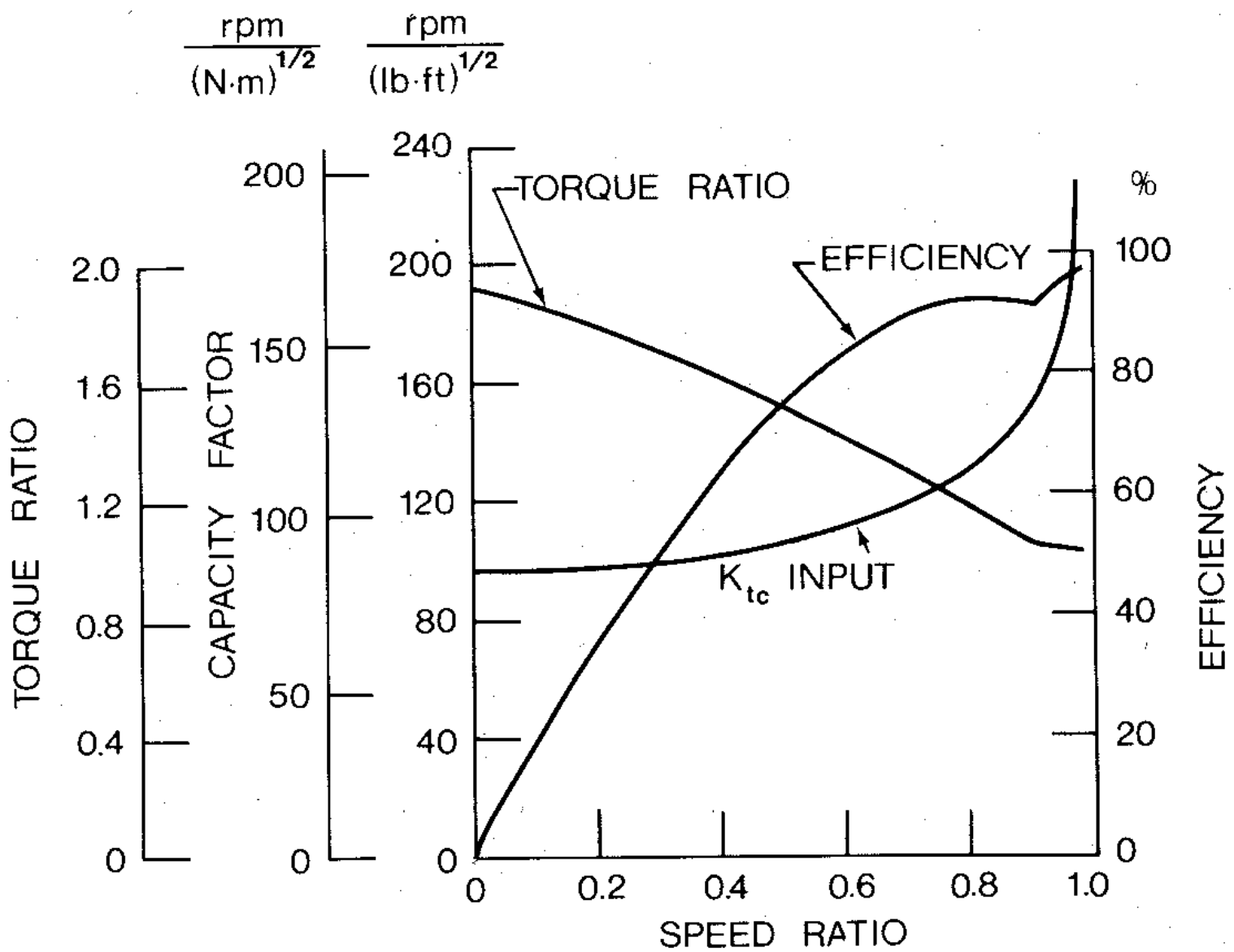

Fig. 3.15 Performance characteristics of a torque converter. (Reproduced by permission of the Society of Automotive Engineers from reference 3.7.)