DWG NO 12496923 SH 3

REVISIONS				
ZONE	LTR	DESCRIPTION	DATE	APPROVED

CAD MAINTAINED DRAWING. CHANGES SHALL BE INCORPORATED BY THE DESIGN ACTIVITY. DO NOT REVISE DRAWING MANUALLY.

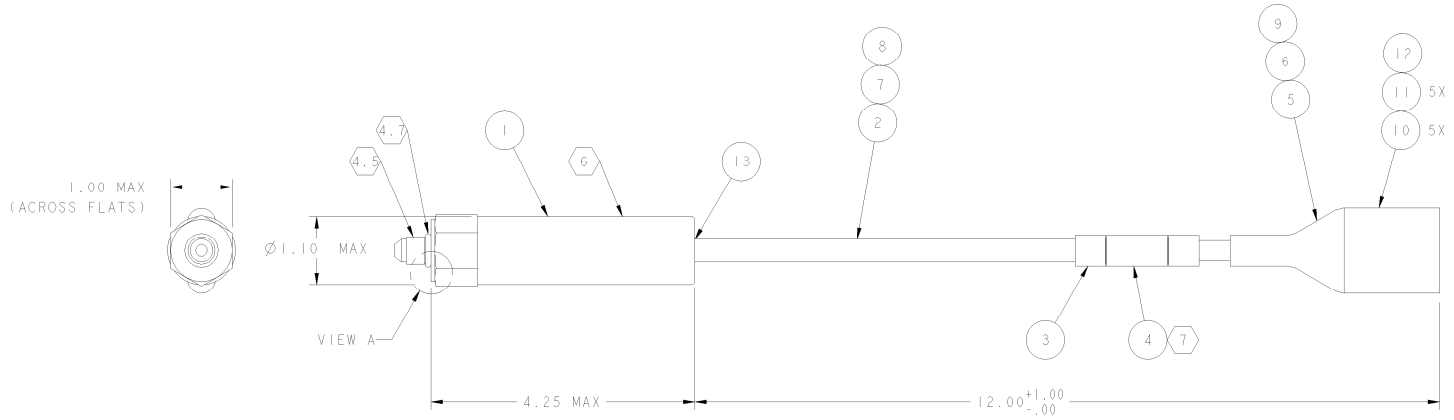

PRESSURE TRANSDUCER ASSEMBLY

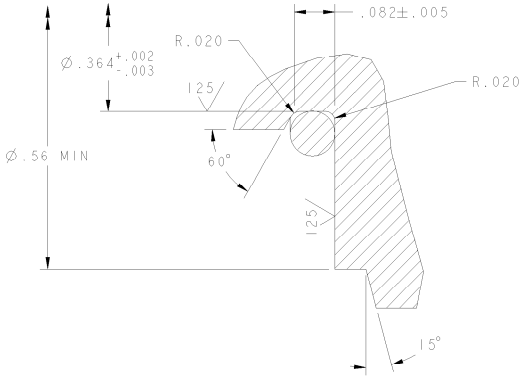

VIEW A
SCALE: 8/1

PART NO. 12496923

		UNLESS OTHERWISE SPECIFIED DIMENSIONS ARE IN INCHES	CONTRACT NUMBER
		TOLERANCES ON: 2 PLACE ± 3 PLACE ±.010 ANGLES ±1°	CONTRACTOR United Defense L.P. Ground Systems Division Arlington, Virginia 22209
		MATERIAL	DRAWN BY JLN DATE 03/05/06
		THIRD ANGLE PROJECTION	CHECKER ENGINEER STB
	M9 ACE HDC		DRAWING APPROVAL
NEXT ASSY	USED ON	MATL ENGRG	DESIGN APPROVAL
APPLICATION			

U.S. Army Tank-automotive and Armaments Command
WARREN, MICH. 48397-5000

TRANSDUCER, PRESSURE

SIZE	CODE IDENT NO.	DRAWING NO.
D	19207	12496923
SCALE 1.000	UNIT WT	SHEET 3 OF

PRO/E

ASME Y14.1-1995
19207 d Rev