AFT END OF FRAME RAIL 12469307
AND RELATED COMPONENTS

AFT ENDS OF FRAME RAILS 12469306, 12338246,
AND 12338247 AND RELATED COMPONENTS
ARE SIMILAR

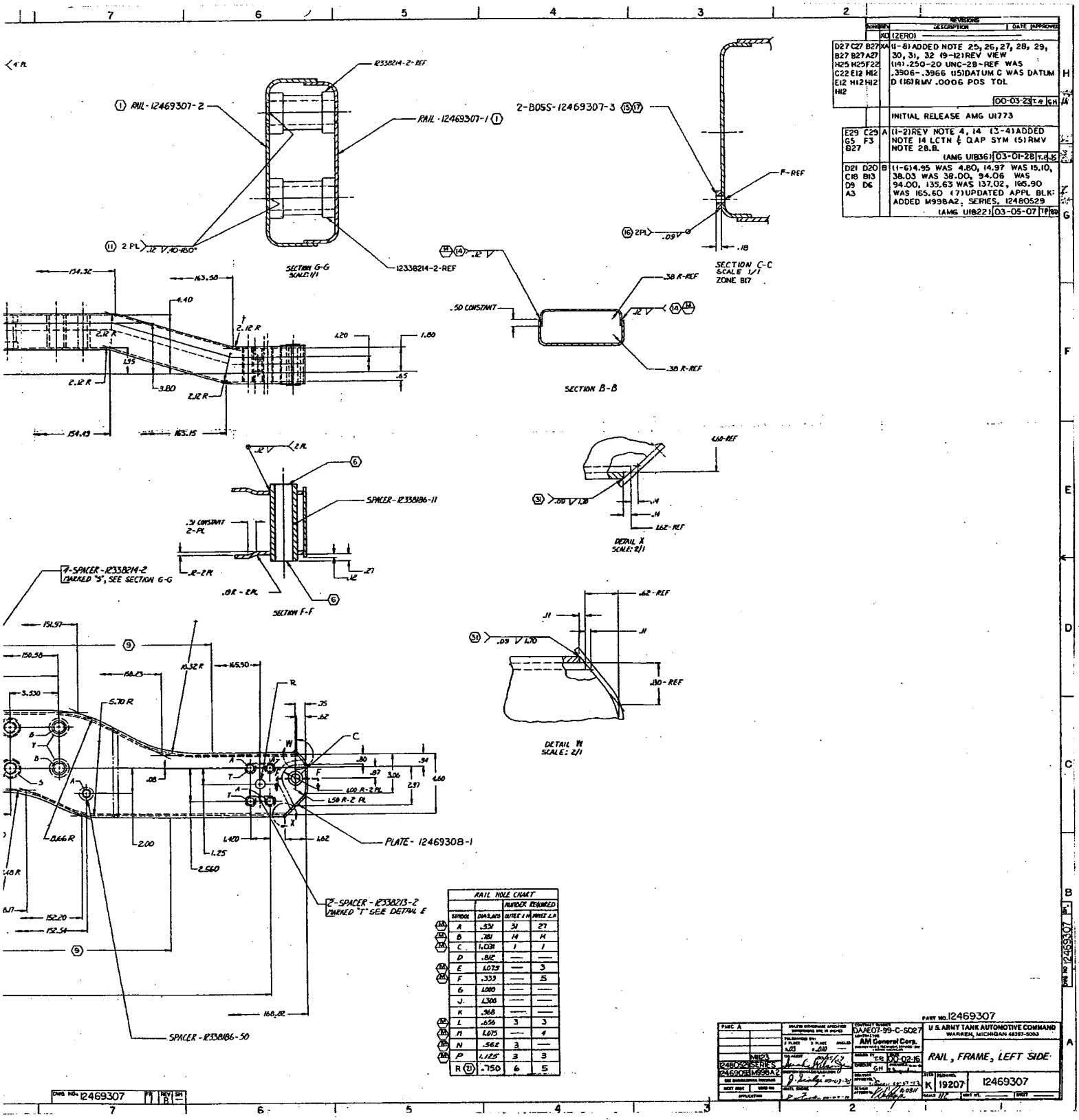

AFT END OF FRAME RAIL 12469307

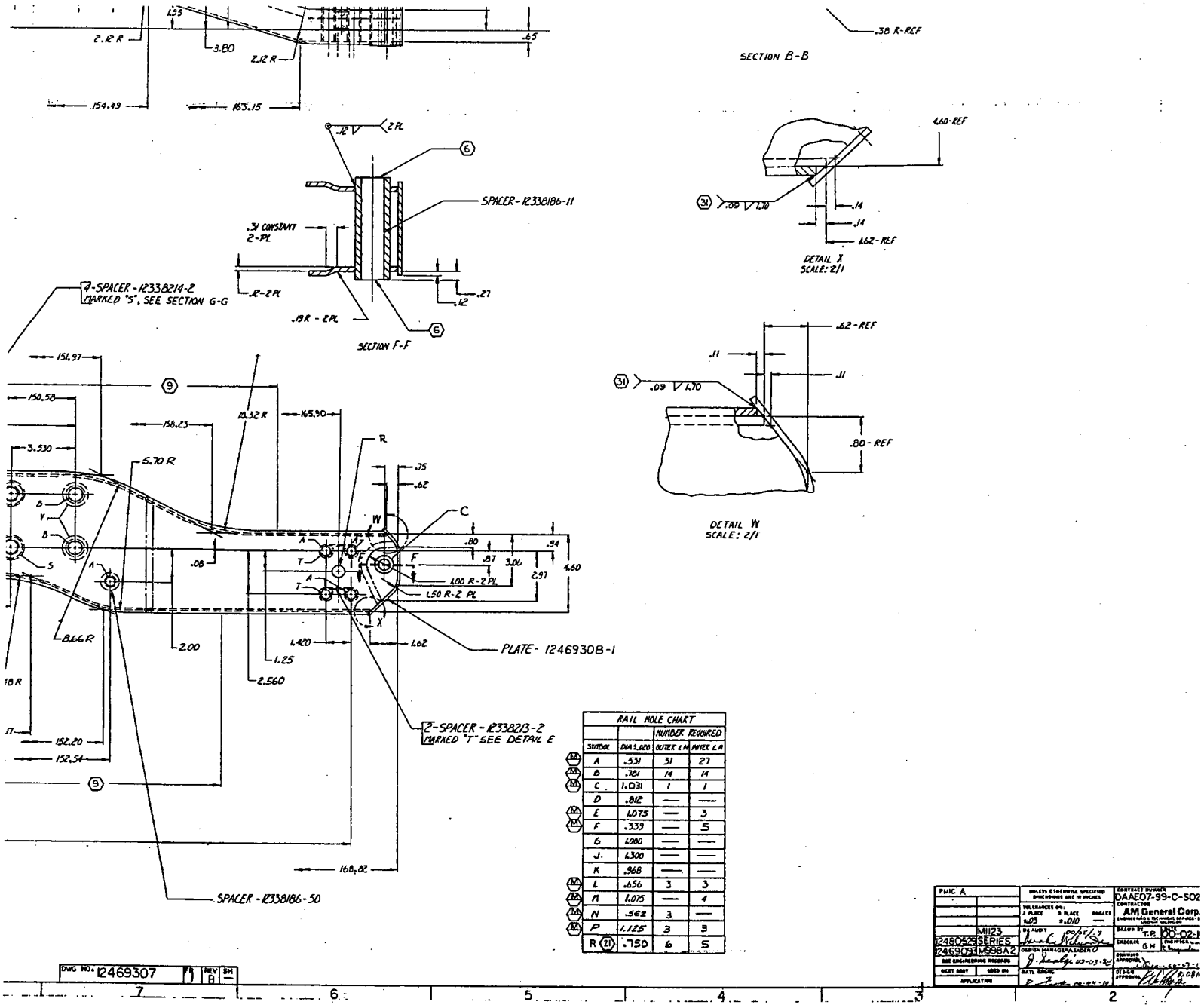

ENLARGEMENT OF AFT END OF FRAME RAIL 12469307

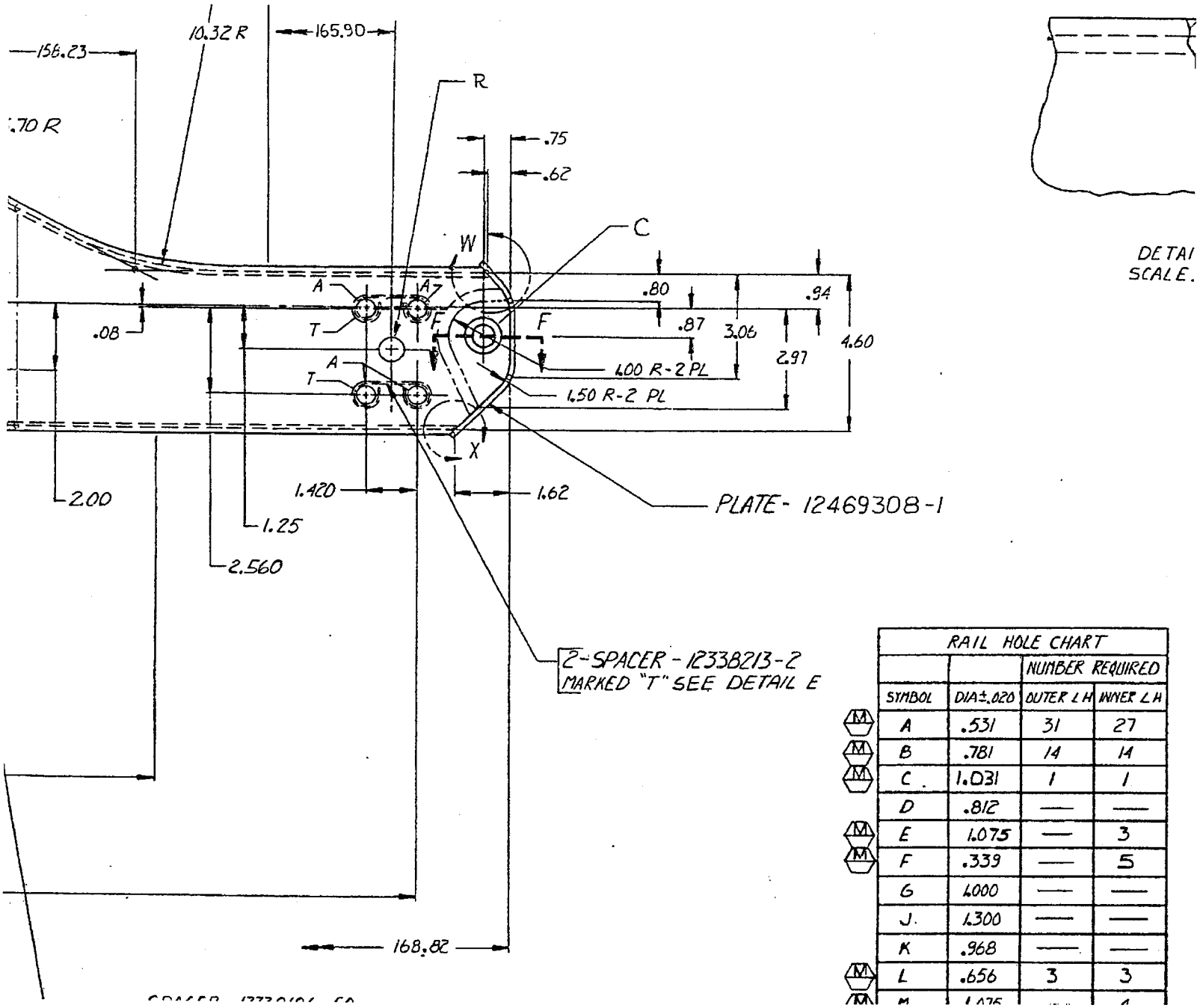

RAIL HOLE CHART			
		NUMBER REQUIRED	
SYMBOL	DIA±.020	OUTER LH	INNER LH
A	.531	31	27
B	.781	14	14
C	1.031	1	1
D	.812	—	—
E	1.075	—	3
F	.339	—	5
G	4.000	—	—
J	1.300	—	—
K	.968	—	—
L	.656	3	3
M	1.075	—	4

FURTHER ENLARGEMENT OF
AFT END OF FRAME RAIL 12469307

REVISIONS				
ZONE	REV	DESCRIPTION	DATE (YR-MO-DA)	APPROVED
	-	PRODUCT BASELINE ERR AMG U1773	00-05-12	GH

NOTES:

1. APPLICABLE STANDARDS/SPECIFICATIONS:
   A. MIL-STD-100F
   B. ASME Y14.5M-1994

2. MATERIAL:
   A. STEEL, CARBON, SHEET OR STRIP,
      HR, CQ, PEO,
      IAW ASTM A569
      .0897 THICK

   B. ALTERNATE MATERIAL:
      STEEL, CARBON, SHEET,
      CR, CQ, OILED,
      IAW ASTM A366
      .0897 THICK

3. REMOVE ALL BURRS AND SHARP EDGES

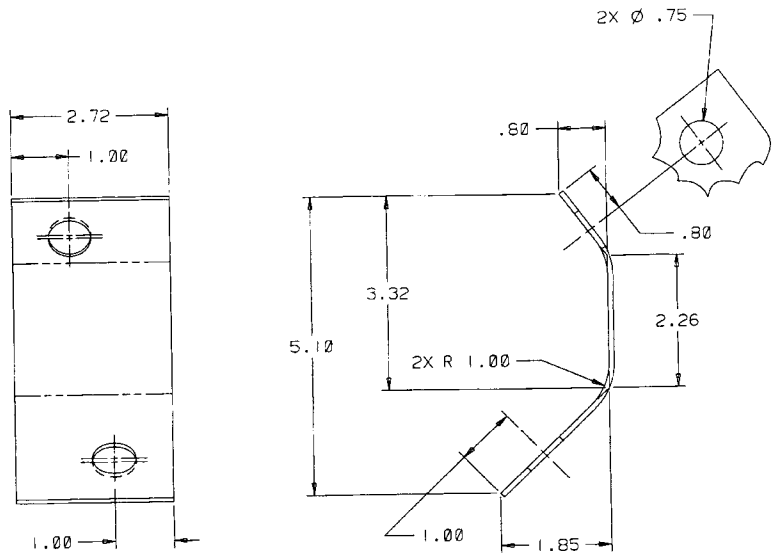

12469308-2 OPPOSITE
PART NO. 12469308-1 SHOWN

PMIC A	UNLESS OTHERWISE SPECIFIED: DIMENSIONS ARE IN INCHES TOLERANCES ON 2 PLACES ±.03, 3 PLACES ± —	CONTRACT NUMBER DAAE07-99-C-S027 CONTRACTOR AM General Corp, ENGINEERING & TECHNICAL SERVICE DIV., LIVONIA, MICHIGAN	DESIGN ACTIVITY U.S.ARMY TANK-AUTOMOTIVE COMMAND WARREN, MICHIGAN 48397-5000	
		DRAWN BY EP — DATE (YR-MO-DA) 00-03-10	PLATE, SIDE RAIL	
12469306	QA AUDIT ISIAH WILSON JR	CHECKER GRH — ENGINEER R.FANGANIBAN		
12469307 — M1123	DESIGN MANAGER/LEADER J SCALZI	DRAWING APPROVAL W GRAY	SIZE D — CAGE CODE 19207	12469308
NEXT ASSY — USED ON	MATL ENGR D FISK	DESIGN APPROVAL R VAN PROEYEN	SCALE 1/1 — UNIT WT —	SHEET —
APPLICATION				

DWG NO. 12469308 SH -

COMPUTER GENERATED

NOTES:

(1) MATERIAL:
A. STEEL, CARBON, WELDED TUBING, MT 1010 - MT 1020, IAW ASTM A513

B. ALTERNATE MATERIAL: STEEL, CARBON, SEAMLESS TUBING, MT 1010 - MT 1020, IAW ASTM A519

2. REMOVE ALL BURRS AND SHARP EDGES

(3) SURFACE SHALL HAVE CLASS I DIAMOND KNURLING

(4) FINISH: FINISH IAW DRAWING 12469117

(5) MATERIAL: STEEL, CARBON, COLD DRAWN, 12L14, IAW ASTM A108

(6) MATERIAL: STEEL, CARBON, WELDED TUBING, MT 1010 - MT 1020, IAW ASTM A512

(7) FINISH: FINISH IAW DRAWING 12469113, TOPCOAT COLOR SHALL BE GREEN 383

8. PMIC, A

(9) FINISH: COML
PRIME COAT: CHEMLOCK NO. 205 PRIMER
FINISH COAT: THIXON NO. 508 COVER COAT
ROBINSON RUBBER
4600 QUEBEC AVE N.
MINNEAPOLIS, MN 55428

10. DIMENSIONAL LIMITS APPLY WITHOUT PAINT

(11) MATERIAL: STAINLESS STEEL TUBING, TYPE 304, ANNEALED AND PICKLED, IAW ASTM A249 OR A269

(12) WHEN MATERIAL PER NOTE 11 IS USED NO PROTECTIVE FINISH IS REQUIRED

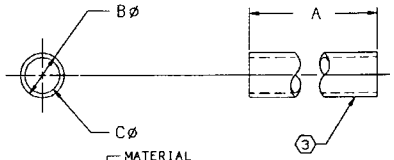

PART NO.	MATERIAL	SURFACE	FINISH	A	B	C
12338186-1	1			1.370	1.000	.750
12338186-2	1			1.670	1.000	.750
12338186-3	1			1.070	1.000	.750
12338186-4	1			1.760	1.000	.750
12338186-5	1			1.950	1.000	.750
12338186-6	1			1.560	1.000	.750
12338186-7	1			1.920	1.375	1.000
12338186-8	1			2.480	1.000	.625
12338186-9	1			3.050	1.000	.750
12338186-10	1			2.480	1.375	.875
12338186-11	6			3.000	1.00	.688
12338186-12	1			3.450	1.00	.500
12338186-13	1			1.875	1.000	.750
12338186-14	1			1.690	1.000	.750
12338186-15	1			1.690	.750	.532
12338186-16	1			4.100	1.000	.562
12338186-17	6			6.550	1.000	.562
12338186-18	1			4.162	1.000	.562
12338186-19	1			3.540	1.000	.562
12338186-20	OPTL 1/11		OPTL 4/7/12	.180	1.000	.500
12338186-21	1			3.380	1.000	.437
12338186-22	1			.220	.625	.459
12338186-23	1			.360	.625	.459
12338186-24	1			1.320	1.000	.750

PART NO.	MATERIAL	SURFACE	FINISH	A	B	C
12338186-25	1			2.080	.625	.407
12338186-26	1			.810	1.000	.375
12338186-27	1			2.010	1.000	.750
12338186-28	1			3.940	1.000	.562
12338186-29	1			2.480	1.000	.750
12338186-30	1			1.500	.625	.500
12338186-31	1			3.000	.625	.500
12338186-32	1			1.359	.625	.500
12338186-33	1			1.500	.703	.500
12338186-34	1			.925	.625	.500
12338186-35	1			4.080	.625	.505
12338186-36	1			.780	.481	.281
12338186-37	1			1.315	.625	.500
12338186-38	1			2.750	1.00	.625
12338186-39	OPTL 1/11	3	OPTL 4/7/12	.84	.531	.281
12338186-40	OPTL 1/11	3	OPTL 4/7/12	.40	.531	.281
12338186-41	1			.85	.750	.500
12338186-42	5		9	1.25	.625	.276 .266
12338186-43	1			.44	.531	.281
12338186-44	1			3.050	1.125	.625
12338186-45	1			1.920	1.000	.75
12338186-46	1			2.450	1.000	.75
12338186-47	1			1.980	1.000	.75
12338186-48	1			3.020	1.000	.75

PART NO.	MATERIAL	SURFACE	FINISH	A	B	C
12338186-49	1			2.450	1.375	.875
12338186-50	1			2.450	1.000	.625
12338186-51	1			3.020	1.125	.625
12338186-52	1			2.250	.625	.407
12338186-53	1		7	.120	1.000	.374
12338186-54	1			3.220	1.000	.624
12338186-55	1			3.220	1.000	.374
12338186-56	1			.180	.750	.500
12338186-57	1			.976	.625	.500
12338186-58	1			1.397	.625	.500
12338186-59	1			1.950	1.375	.875
12338186-60	1			1.950	1.000	.625
12338186-61	1		7	.500	.531	.281
12338186-62	1		7	.160	1.000	.500
12338186-63	1			.250	1.000	.500
12338186-64	1			2.000	.750	.531
12338186-65	1			2.000	1.938	1.310
12338186-66	1			2.000	1.000	.750
12338186-67	OPTL 1/11		OPTL 4/7/12	2.295	.625	.407
12338186-68	OPTL 1/11		OPTL 4/7/12	.800	1.000	.406
12338186-69	OPTL 1/11		OPTL 4/7/12	1.720	.750	.437
12338186-70	OPTL 1/11		OPTL 4/7/12	.880	.750	.531
12338186-71	OPTL 1/11		OPTL 4/7/12	2.00	.85	.450
12338186-72	1			1.760	.750	.500
12338186-73	1			2.00	1.125	.812
12338186-74	1			2.215	1.938	1.270 1.260
12338186-75	11		12	2.575	.750	.437
12338186-78	11		12	.31	.625	.281
12338186-79	1			1.830	1.000	.750
12338186-80	1			2.630	1.000	.625
12338186-81	1			2.900	1.000	.75
12338186-82	1			2.330	1.375	.875
12338186-83	1			2.330	1.000	.625
12338186-84	1			2.900	1.125	.625
12338186-85	1			1.830	1.375	.875
12338186-86	1			2.330	1.000	.75
12338186-87	1			1.830	1.000	.625
12338186-76	11		12	5.050	1.000	.562
12338186-77	11		12	1.825	.750	.437
12338186-89	1		4	.406	.625	.406

REVISIONS

ZONE	REV	DESCRIPTION	DATE	APPROVED
H8 G8 F8 F8 F8 E8 D8 D8 C8 E6 G4 C3	N	REDWN W/CHG (1-6)REV NOTE 1, 3, 4, 5, 6, 7 (7-9)ADDED NOTE 10, 11, 12, (10)REV TAB BLK (11-12)ADDED NOTE 3 DES, 12338186-72 (AMG P9449)	00-08-16	JR GH
B3 B3	P	(1-2)ADDED 12338186-73, 12338186-74 (AMG U1773)	00-09-07	LLL JS
B3	R	(1)ADDED 12338186-75 (AMG U1757)	00-09-15	LLL JS
B3	T	(1)ADDED 12338186-78 (AMG U1788)	00-10-18	RKI JS
C3 C4 C4 B4 B4 B4 B4 B4 B4 B4 A3	U	(1)REV TAB BLK (2-10)ADDED 12338186-79, 12338186-80 12338186-81, 12338186-82, 12338186-83, 12338186-84, 12338186-85, 12338186-86, 12338186-87, (11)UPDATED APPL BLK: RMV M998, M998A1, ADDED HMMWV, FOV (AMG P9543)	00-12-15	MC GH
B4	V	(1)ADDED 12338186-76 (AMG U1777)	01-01-16	MC JS
B3	W	(1)ADDED 12338186-77 (AMG U1774)	01-05-08	JR JS
B4	Y	(1)ADDED 12338186-89 (AMG U1823)	02-05-22	ML JS

COMPUTER GENERATED DRAWING

PART NO. SEE TABULATION

12338324	SERIES	UNLESS OTHERWISE SPECIFIED DIMENSIONS ARE IN INCHES	CONTRACT NUMBER DAAE07-92-C-R010
12342661	M809		CONTRACTOR AM General Corp ENGINEERING & TECHNICAL SERVICES DIVISION LIVONIA, MICHIGAN
12338219	M939A2	TOLERANCES ON: 2 PLACES ±.03 3 PLACES ±.010 ANGLES ±.—	
12338217	M939A1		
12338230	M939	QA AUDIT ISIAH WILSON JR	DRAWN BY D. BARNES DATE 85-09-17
12338247	FOV		
12338246	HMMWV	DESIGN MANAGER/LEADER J SCALZI	CHECKED R NEMETH ENGINEER TOM JANUS
SEE ENGINEERING RECORDS			DRAWING APPROVAL N GRAY
NEXT ASSY	USED ON	PRIME ENGINEER D FISK	SYSTEM APPROVAL J KEUSCH
APPLICATION			

U.S. ARMY TANK AUTOMOTIVE COMMAND
WARREN, MICHIGAN 48397-5000

SPACER, FRAME

SIZE E | FSCM NO. 19207 | 12338186

SCALE 1/1 | UNIT WT. — | SHEET —

INTERPRET DRAWING IN ACCORDANCE WITH STANDARDS PRESCRIBED BY DOD-STD-100