OTHER MAJOR COMPONENTS OF THE AFT END OF FRAME ASSEMBLY 12338233

REVISIONS				
ZONE	LTR	DESCRIPTION	DATE	APPROVED
	D	REDRAWN IN CAD WITH CHANGE, MOVED PMIC A FROM NOTE 5 TO TITLE BLOCK, REMOVED DOD-STD-100, ADDED DOD-STD-00100D(AR) AND ANSI Y14.5M-1982. ERR TMK U 3577	2000-02-18	JVV / GM

NOTES:

APPLICABLE STANDARDS/SPECIFICATIONS:
A. DOD-STD-00100D(AR)
B. ANSI Y14.5M-1982

1. MATERIAL:
   A. STEEL, HIGH STRENGTH, LOW ALLOY
      HR, P & O, GRADE 50
      MIN YIELD POINT 50 KSI
      SPEC ASTM A715
      .1793 THICK
   B. ALTERNATE MATERIAL:
      STEEL, HIGH STRENGTH, LOW ALLOY
      HR, P & O, OR CR
      MIN YIELD POINT 50 KSI
      SPEC ASTM A606
      .1793 THICK
   C. ALTERNATE MATERIAL:
      STEEL, HIGH STRENGTH, LOW ALLOY
      GRADE 950X, MIN YIELD STRENGTH
      50 KSI
      SAE J410
      .1793 THICK

2. REMOVE ALL BURRS AND SHARP EDGES

3. A. FINISH:
      CLEAN, SPEC TT-C-490
      TREAT TYPE I OR III
      SPEC TT-C-490
      PRIME SPEC MIL-P-52192, MIL-P-53022
      OR MIL-P-53030
      FINISH COAT BLACK, SPEC MIL-C-46168
      FILM THICKNESS TO BE IN ACCORDANCE
      WITH MIL-STD-193
   B. ALTERNATE FINISH:
      CLEAN AND TREAT TYPE I,
      SPEC TT-C-490
      PRIME WITH EPOXY OR ACRYLIC CATHODIC
      ELECTRODEPOSITION PRIMER, MEETING THE
      PERFORMANCE REQUIREMENTS OF SPEC
      MIL-P-53022
      DRY FILM THICKNESS .50 MILS MINIMUM
      FINISH COAT- BLACK
      SPEC MIL-C-46168
      FILM THICKNESS TO BE
      IN ACCORDANCE WITH
      MIL-STD-193

4. APPLY PER MIL-STD-130:
   19207-SEE TABULATION
   MFR-XXXXX
   METAL STAMP

5.

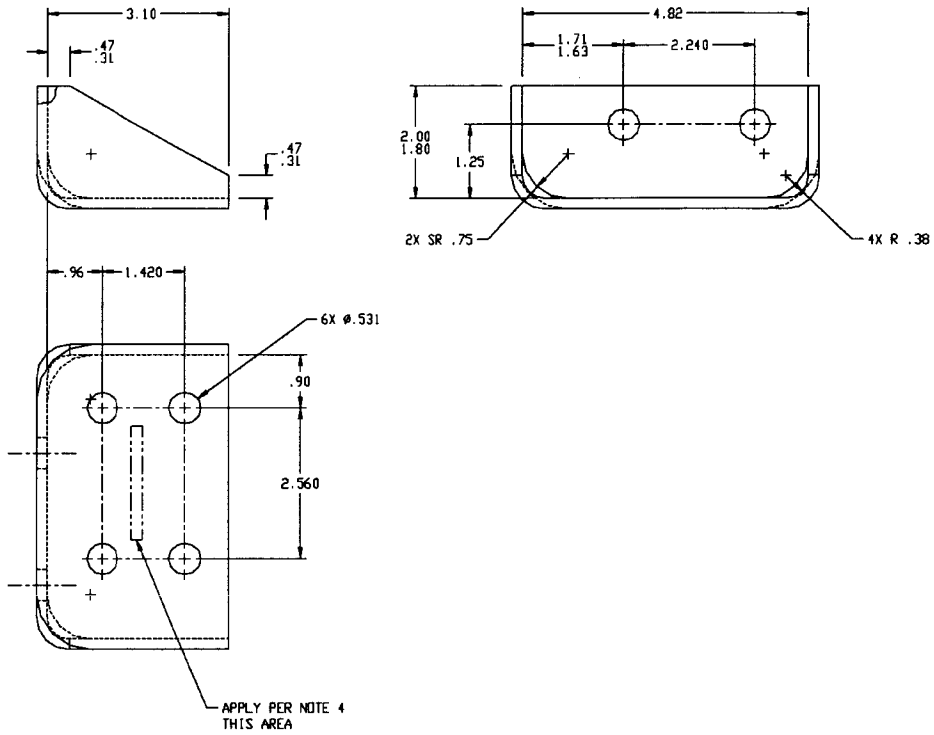

12338167-2 OPPOSITE
PART NO. 12338167-1 SHOWN

PMIC A		UNLESS OTHERWISE SPECIFIED DIMENSIONS ARE IN INCHES TOLERANCES ON DECIMALS FRACTIONS .XX± .03 .XXX± .010 ±	CONTRACT NUMBER DAAE07-83-C-R034	US ARMY TANK-AUTOMOTIVE AND ARMAMENTS COMMAND WARREN, MICHIGAN 48397-5000
		DR ARBIT ALLEN G. CASLER 1985-09-24	CONTRACTOR AM GENERAL CORP. ENGINEERING & TECHNICAL SERVICES DIV. LIVONIA, MICHIGAN	BRACKET, REAR BUMPER MOUNT
		DESIGN MANAGER/LEADER R KREPPS 1985-10-02	DRAWN BY A.E.WHITE 1985-09-13 / CHECKED BY R.NEMETH / ENGINEER XXX	
12338233	HMMWV	MAN. ENGR D.FISK 1985-10-02	DRAWING APPROVAL WILLIAM KENDALL	SIZE D / CAGE CODE 19207 / 12338167
NEXT ASSY	USED ON		DESIGN APPROVAL RIAD KATRIB	SCALE 1/1 / UNIT WT —— / SHEET 1 OF 1
APPLICATION				

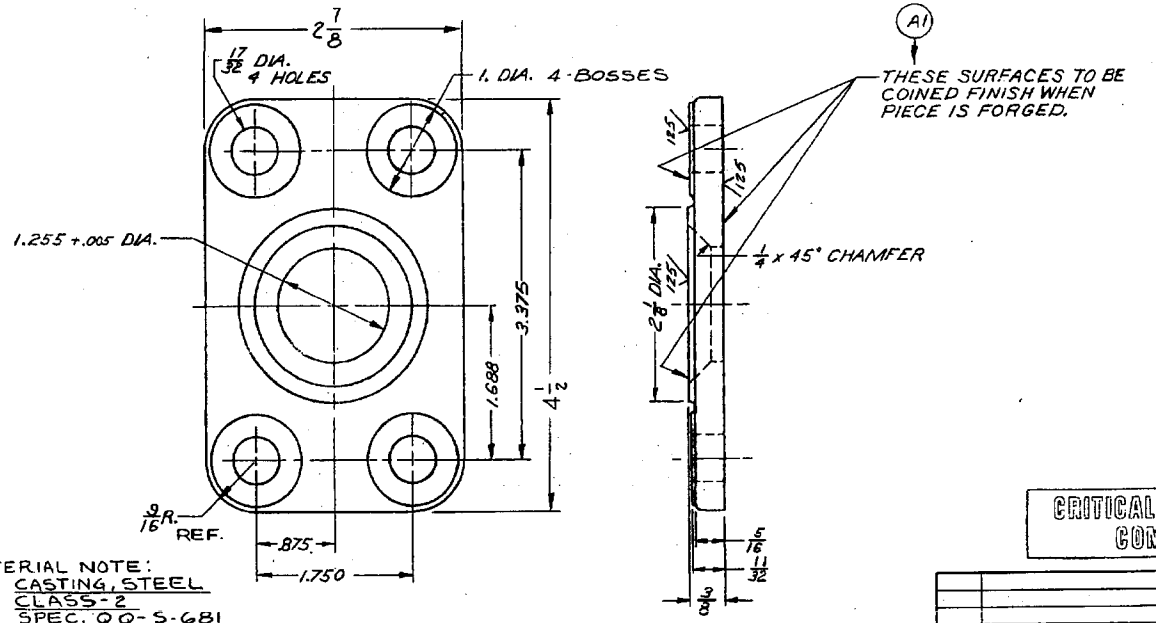

MATERIAL NOTE:
CASTING, STEEL
CLASS-2
SPEC. QQ-S-681
OPTIONAL
BAR, STEEL, CARBON
FS1018 TO FS1025
SPEC. QQ-S-633

NOTE:
ALL RADII TO BE 1/8 UNLESS OTHERWISE SPECIFIED

B1

CRITICAL APPLICATION COMPONENT

SYM	DESCRIPTION	DATE	APPROVAL
B	(1) NOTE ADDED (TAC-H7412)	12-22-80	O.B.
A	(A1) COINING NOTE ADDED	12-4-53	T.M.

REVISIONS

PHYSICAL PROPERTIES	
YP	
TS	
EL 2	
RA	
BH	
RH	

C-7355397
NEXT ASSY | USED ON
APPLICATION
APPLY PART NO.
DO

UNLESS OTHERWISE SPECIFIED DIMENSIONS ARE IN INCHES
TOLERANCES ON DECIMALS ±.005
ANGLES ±2° FRACTIONS ±1/32
MATERIAL
HEAT TREATMENT
FINAL PROTECTIVE FINISH

ORIGINAL DATE OF DRAWING APR. 7, 1950
DRAFTSMAN KH | CHECKER
TRACER | CHECKER
ENGINEER | ENGINEER
SUBMITTED
ORD DEPT
APPROVED BY ORDER OF THE CHIEF OF ORDNANCE
ORD DEPT

BRACKET, PINTLE

7355393

SCALE 1/1 | UNIT WT ——

ORDNANCE DEPT
DEPT OF THE ARMY
DETROIT ARSENAL

DWG SIZE B | 7355393
SHEET — OF —

49-37 RAPD

C-25-40

FED. SUP CLASS
2540

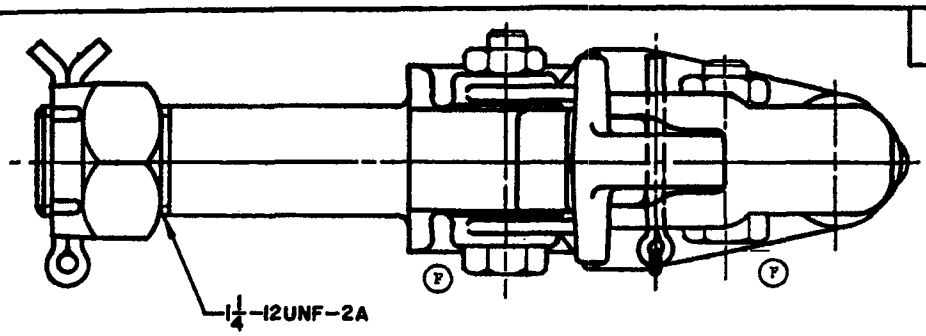

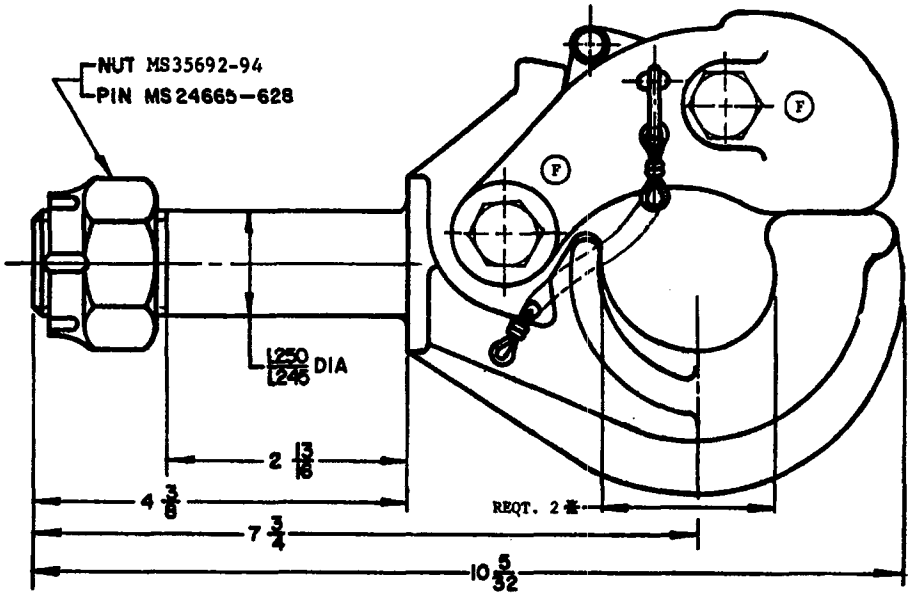

(F) REQUIREMENTS:

1. THREADS SHALL BE IN ACCORDANCE WITH FED-STD-H28/2.
2. APPLICABLE PROVISIONS OF ASCC AIR STD 11/8, QSTAG-264 AND STANAG 4101 ARE MARKED *. THIS DIMENSION SHALL BE OF SUCH SIZE THAT IT WILL ACCEPT A 3" X 1.66" LUNETTE (SEE MS51336).
3. MARKING SHALL CONSIST OF THE MS PART NUMBER AND THE MANUFACTURER'S IDENTIFICATION IN ACCORDANCE WITH MIL-STD-130.

(F) NOTES:

1. DIMENSIONS ARE IN INCHES AND ARE SHOWN FOR ENGINEERING REFERENCE ONLY.
2. FOR DESIGN FEATURE PURPOSES, THIS STANDARD TAKES PRECEDENCE OVER PROCUREMENT DOCUMENTS REFERENCED HEREIN.
3. REFERENCED DOCUMENTS SHALL BE OF THE ISSUE IN EFFECT ON DATE OF INVITATION FOR BIDS OR REQUEST FOR PROPOSAL, EXCEPT THAT REFERENCED ADOPTED INDUSTRY DOCUMENTS SHALL GIVE THE DATE OF THE ISSUE ADOPTED.
4. THE USE OF RECYCLED MATERIALS WHICH MEET THE REQUIREMENTS OF THE APPLICABLE MATERIAL SPECIFICATION WITHOUT JEOPARDIZING THE INTENDED USE OF THE ITEM SHALL BE ENCOURAGED.

* CERTAIN PROVISIONS OF THIS STANDARD ARE THE SUBJECT OF INTERNATIONAL STANDARDIZATION AGREEMENTS ASCC AIR STD 11/8, QSTAG-264 AND STANAG 4101. WHEN REVISION OR CANCELLATION OF THIS STANDARD IS PROPOSED WHICH WILL AFFECT OR VIOLATE THE INTERNATIONAL AGREEMENT CONCERNED, THE PREPARING ACTIVITY WILL TAKE APPROPRIATE RECONCILIATION ACTION THROUGH INTERNATIONAL STANDARDIZATION CHANNELS, INCLUDING DEPARTMENTAL STANDARDIZATION OFFICES, IF REQUIRED.

☆U.S. GOVERNMENT PRINTING OFFICE: 1981—505-022/8237

(F) DENOTES CHANGES

MS PART NO.	REFERENCE DRAWING
MS 51335-1	8380199

P.A.	INTERNATIONAL INTEREST	TITLE	MILITARY STANDARD
ARMY-AT Other Cust NAVY-YD AF-99	(SEE *)	PINTLE ASSEMBLY, TOWING, 18,000 LBS. CAPACITY, MANUAL RELEASE	MS 51335
PROCUREMENT SPECIFICATION NONE		SUPERSEDES: MS 51116 (ORD)	SHEET 1 OF 2

DD FORM 1 SEP 67 672-1 (Coordinated) PREVIOUS EDITIONS OF THIS FORM ARE OBSOLETE. 2540-0306

REVIEW ACTIVITY: DLA-CS
USER ACTIVITY: ARMY-ME; NAVY-MC

APPROVED 10 NOVEMBER 1960 REVISED (A) 10 SEPTEMBER 1963 (B) 3 AUGUST 1965 (C) 24 JULY 1967 (D) 30 MAY 1972 (E) 9 MAR 79 (F) 29 SEP 81

This military standard is approved for use by all Departments and Agencies of the Department of Defense. Selection for all new engineering and design applications and for repetitive use shall be made from this document when applicable.

ument provided by IHS.
Document provided by IHS Licensee=TACOM/9997878100, 03/20/2004 16:10:42 MST
Questions or comments about this message: please call the Document Policy Group at 303-397-2295.

FED. SUP CLASS
2540

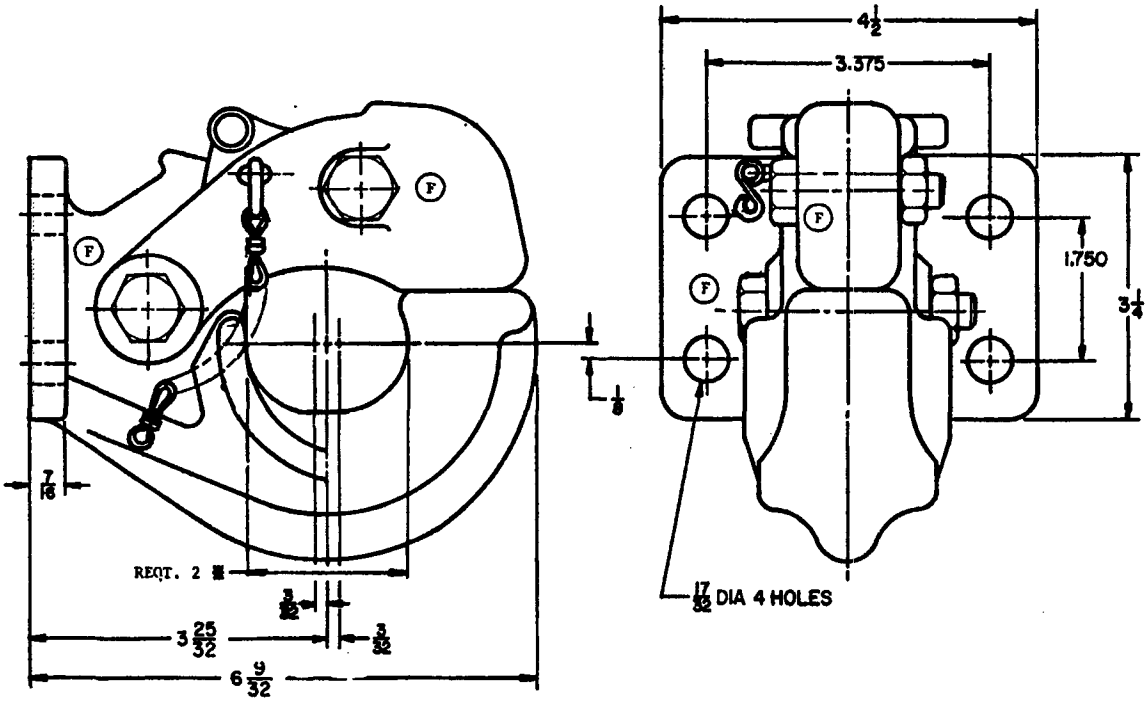

(F) REQUIREMENTS:

1. THREADS SHALL BE IN ACCORDANCE WITH FED-STD-H28/2.
2. APPLICABLE PROVISIONS OF ASCC AIR STD 11/8, QSTAG-264 AND STANAG 4101 ARE MARKED *. THIS DIMENSION SHALL BE OF SUCH SIZE THAT IT WILL ACCEPT A 3" X 1.66" LUNETTE (SEE MS51336).
3. MARKING SHALL CONSIST OF THE MS PART NUMBER AND THE MANUFACTURER'S IDENTIFICATION IN ACCORDANCE WITH MIL-STD-130.

(F) NOTES:

1. DIMENSIONS ARE IN INCHES AND ARE SHOWN FOR ENGINEERING REFERENCE ONLY.
2. FOR DESIGN FEATURE PURPOSES, THIS STANDARD TAKES PRECEDENCE OVER PROCUREMENT DOCUMENTS REFERENCED HEREIN.
3. REFERENCED DOCUMENTS SHALL BE OF THE ISSUE IN EFFECT ON DATE OF INVITATION FOR BIDS OR REQUEST FOR PROPOSAL, EXCEPT THAT REFERENCED ADOPTED INDUSTRY DOCUMENTS SHALL GIVE THE DATE OF THE ISSUE ADOPTED.
4. THE USE OF RECYCLED MATERIALS WHICH MEET THE REQUIREMENTS OF THE APPLICABLE MATERIAL SPECIFICATION WITHOUT JEOPARDIZING THE INTENDED USE OF THE ITEM SHALL BE ENCOURAGED.

* CERTAIN PROVISIONS OF THIS STANDARD ARE THE SUBJECT OF INTERNATIONAL STANDARDIZATION AGREEMENTS ASCC AIR STD 11/8, QSTAG-264 AND STANAG 4101. WHEN REVISION OR CANCELLATION OF THIS STANDARD IS PROPOSED WHICH WILL AFFECT OR VIOLATE THE INTERNATIONAL AGREEMENT CONCERNED, THE PREPARING ACTIVITY WILL TAKE APPROPRIATE RECONCILIATION ACTION THROUGH INTERNATIONAL STANDARDIZATION CHANNELS, INCLUDING DEPARTMENTAL STANDARDIZATION OFFICES, IF REQUIRED.

APPROVED 10 NOVEMBER 1960 REVISED (F) FOR CHANGES SEE SHEETS 1 AND 2

MS PART NO.	REFERENCE DRAWING
MS 51335—2	838019B

P.A. Other Cust	INTERNATIONAL INTEREST (SEE *)	TITLE PINTLE ASSEMBLY, TOWING, 18,000 LBS. CAPACITY, MANUAL RELEASE	MILITARY STANDARD MS 51335
PROCUREMENT SPECIFICATION		SUPERSEDES: MS 51116 (ORD)	SHEET 2 OF 2

DD FORM 1 SEP 67 672-1 (Coordinated)

PREVIOUS EDITIONS OF THIS FORM ARE OBSOLETE.

cument provided by IHS.

Document provided by IHS Licensee=TACOM/9997878100, 03/20/2004 16:10:42 MST
Questions or comments about this message: please call the Document Policy Group at 303-397-2295.

ZONE	REV	DESCRIPTION	DATE (YR-MO-DA)	APPROVED
H8 H8 G8 A3 A2 F2	E	REDWN W/CHG (1-3)REV NOTE 1A, 1B, 3 (4)ADDED PMIC A (5)RMV ±2° FROM TOL BLK (6)RELOC ±2° TO FIELD OF DWG (AMG U18811)	03-09-09	KAS MR

NOTES:

1. MATERIAL:
   A. STEEL, CARBON, 1008-1020, COMMERCIAL STEEL, P&O, IAW ASTM A635

      .250 THICK

   B. ALTERNATE MATERIAL: STEEL, CARBON, PLATE, 1009-1020, HR, P&O, IAW ASTM A827

      .250 THICK

2. FINISH: FINISH IAW DRAWING 12469113 OR 12469120, TOPCOAT COLOR SHALL BE BLACK 37030

3. SHALL BE FREE OF BURRS AND SHARP EDGES

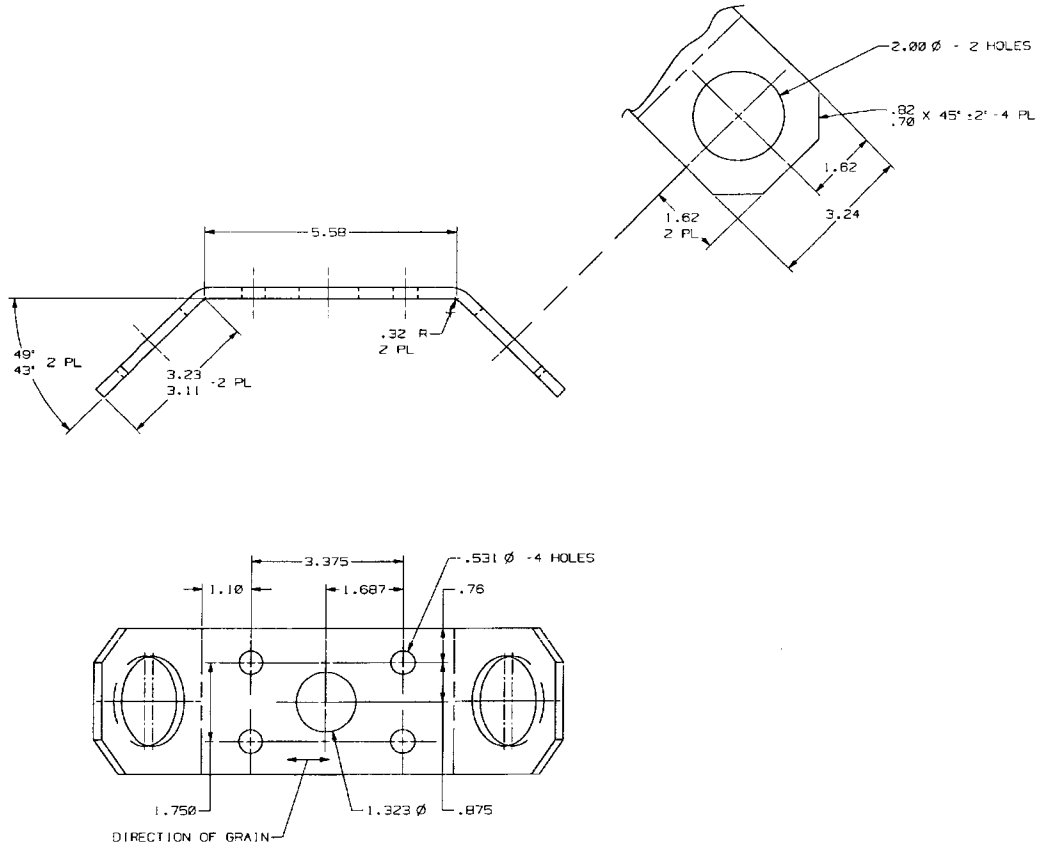

INTERPRET DRAWING IN ACCORDANCE WITH STANDARDS PRESCRIBED BY DOD-STD-100

PART NO. 12338189

PMIC A	UNLESS OTHERWISE SPECIFIED DIMENSIONS ARE IN INCHES. TOLERANCES ON 2 PLACES ±.03 3 PLACES ±.010	CONTRACT NUMBER DAAE07-99-C-5027	DESIGN ACTIVITY U.S. ARMY TANK-AUTOMOTIVE COMMAND WARREN, MICHIGAN 48397-5000	
	QA AUDIT J WILSON JR	CONTRACTOR AM General Corp ENGINEERING & TECHNICAL SERVICE DIV. LIVONIA, MICHIGAN	PLATE, SAFETY CHAIN	
12338234 M1123	CURT QA APPROVAL NOT REQUIRED	DRAWN BY R. SENOSKI DATE (YR-MO-DA) 85-09-09		
12338233 HMMWV	DESIGN MANAGER/LEADER M RANSOME	CHECKED R. NEMETH ENGINEER T. YANUS	SIZE E CAGE CODE 19207	12338189
NEXT ASSY USED ON	MATL ENGR D FISK	DRAWING APPROVAL W GRAY	SCALE 1/1 UNIT WT	SHEET
APPLICATION		DESIGN APPROVAL G KESEK		

(G 7-13-84)
COMPUTER GENERATED

DWG NO. 12338189 SH

NOTES:

1. MATERIAL:
   A. STEEL, HIGH STRENGTH, LOW ALLOY
      HR, P & O, GRADE 50
      MIN YIELD POINT 50 KSI
      SPEC ASTM A715
      .1495 THICK
   B. ALTERNATE MATERIAL:
      STEEL, HIGH STRENGTH, LOW ALLOY
      HR, P & O, OR CR
      MIN YIELD POINT 50KSI
      SPEC ASTM A606
      .1495 THICK
   C. ALTERNATE MATERIAL:
      STEEL, HIGH STRENGTH, LOW ALLOY
      GRADE 950X, MIN YIELD STRENGTH 50 KSI
      SAE J410
      .1495 THICK
2. ALL INSIDE BEND RADII TO BE .375 UNLESS OTHERWISE SPECIFIED
3. REMOVE ALL BURRS AND SHARP EDGES
4. FINISH:
   A. CLEAN SPEC TT-C-490
      TREAT TYPE I OR III,
      SPEC TT-C-490
      PRIME SPEC MIL-P-52192
      MIL-P-53022, MIL-P-53030
      FINISH COAT-BLACK
      SPEC MIL-C-46168
      FILM THICKNESSES TO BE IN ACCORDANCE WITH MIL-STD-193
5. APPLY PER MIL-STD-130:
   19207-12338193
   MFR-XXXXX
   METAL STAMPED
6. PMIC, A
4. ALTERNATE FINISH:
   B. CLEAN AND TREAT TYPE I, SPEC TT-C-490
      PRIME WITH EPOXY OR ACRYLIC CATHODIC ELECTRODEPOSITION PRIMER, MEETING THE PERFORMANCE REQUIREMENTS OF SPEC MIL-P-53022
      DRY FILM THICKNESS .50 MILS MINIMUM
      TOPCOAT-BLACK, SPEC MIL-C-46168
      FILM THICKNESS TO BE IN ACCORDANCE WITH MIL-STD-193
7. FLANGES MAY LAY OPEN MAXIMUM OF 5° THIS DISTANCE-2 PLACES

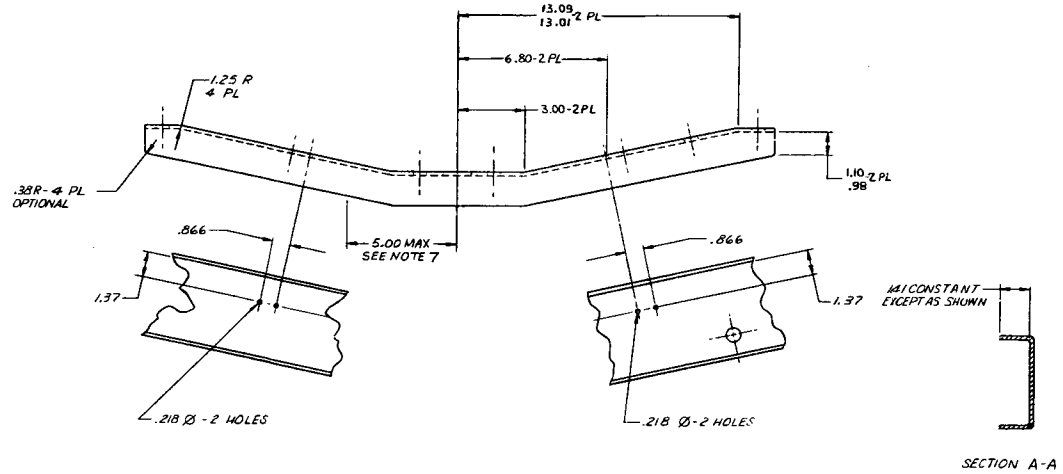

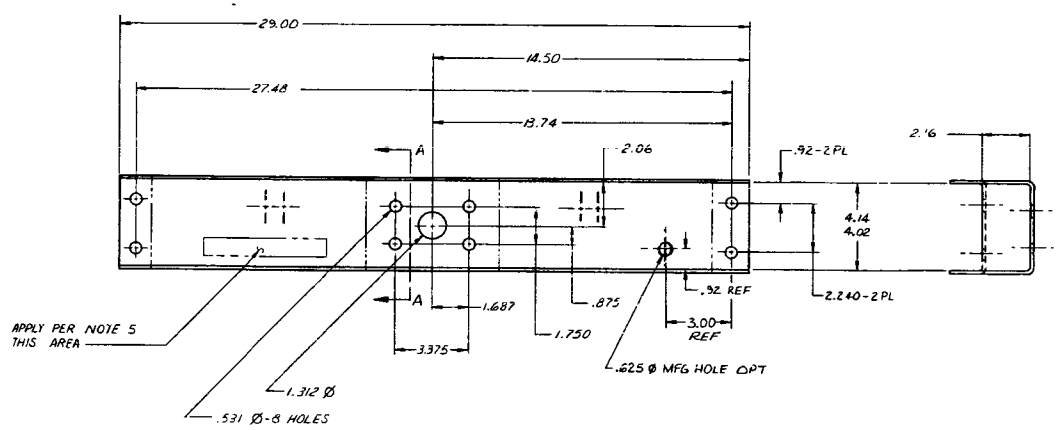

ZONE	REV	DESCRIPTION	DATE	APPROVED
		APPROVAL SIGNATURES ADDED	10-14-85	
E8	A	(1) ADDED NOTE 4B	6-16-86	A.K. WCH
		INITIAL RELEASE AMG N2900 - 12		
C4C4 C4F5 D8C3 E8	B	(1-5) ADDED .625 DIA MFG HOLE OPT, 3.00 REF, .92 REF, 5.00 MAX SEE NOTE 7, NOTE 7. (6) CHG DIM 4.14/4.02 WAS 4.05 (7) REV NOTE 4B (AMG R2401) 90-10-30 GF		
G5 G5 H5G3 G5 G5 H5	C	(1-4) 3.00-2 PL WAS 3.00, 6.80-2 PL WAS 6.80, 13.01-13.09-2 PL WAS 12.90 .98-1.10-2 PL WAS 1.08-2 PL (5-7) RMV 6.00, 13.60, 25.80 (AMG R2785) 93-04-29 GS		

PART NO. 12338193

U.S. ARMY TANK AUTOMOTIVE COMMAND
WARREN, MICHIGAN 48397-5000

CROSSMEMBER, REAR

SIZE	FSCM NO.	
E	19207	12338193

SCALE 1/2 UNIT WT. SHEET

UNLESS OTHERWISE SPECIFIED DIMENSIONS ARE IN INCHES
TOLERANCES ON: 2 PLACES ±.03 3 PLACES ±.010 ANGLES ±
QA AUDIT
DESIGN MANAGER/LEADER
MAT'L ENGR
CONTRACT NUMBER DAAE07-83-C-R034
CONTRACTOR AM General Corp.
DRAWN BY B.B. DATE 5/10/85
CHECKED R. Nemeth
DRAWING APPROVAL
DESIGN APPROVAL 10-25-85

12338233 HMMWV
THE ENGINEERING RECORDS
NEXT ASSY USED ON
APPLICATION

INTERPRET DRAWING IN ACCORDANCE WITH STANDARDS PRESCRIBED BY DOD - STD - 100

12338193

NOTES:

1. MATERIAL:
   A. STEEL, SHEET OR STRIP, HSLAS-F, GRADE 50, P&O, IAW ASTM A1011

      .180 THICK

   B. ALTERNATE MATERIAL: STEEL, HIGH-STRENGTH, LOW-ALLOY, HR-P&O OR CR, MIN YIELD POINT 50 KSI, IAW ASTM A606

      .180 THICK

   C. ALTERNATE MATERIAL: STEEL, HIGH-STRENGTH, LOW-ALLOY, GRADE 050YHO, IAW SAE J1392

      .180 THICK

2. SHALL BE FREE OF BURRS & SHARP EDGES

3. WELD:
   A. WELD IAW MIL-STD-126, CLASS 2

   B. ALTERNATE WELD: WELD IAW AWS D1.1, CYCLICALLY LOADED CONNECTION

4. ALL WELD SIZES ARE MINIMUM

5. FINISH: FINISH IAW DRAWING 12369003 EXCEPT TOPCOAT COLOR SHALL BE BLACK 37030

6. APPLY PER MIL-STD 130: 19207-12338175 MFR-XXXXX METAL STAMP

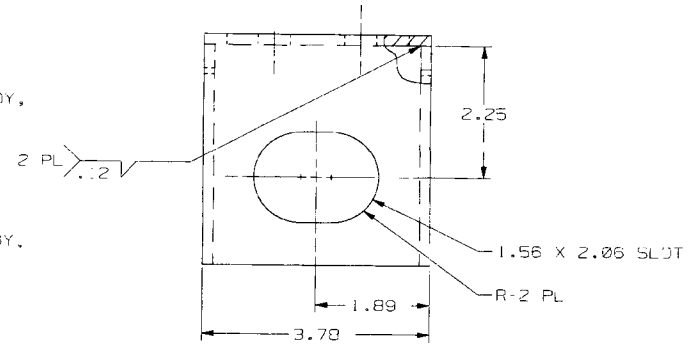

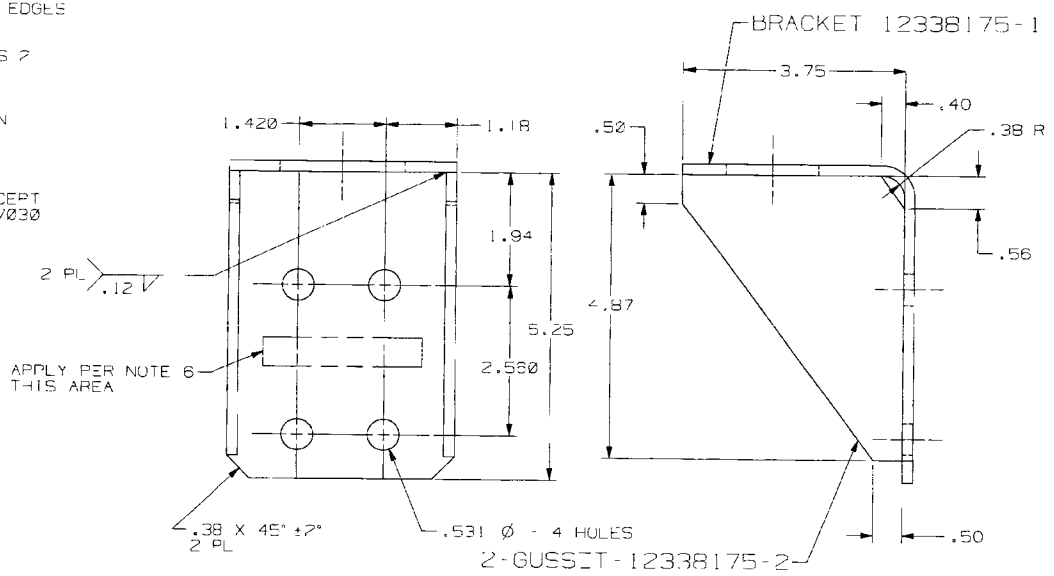

REVISIONS					
ZONE	REV	DESCRIPTION	DATE (YR-MO-DA)	APPROVED	
D8 D8 C8 C8 C8 B8 C8 A3 A5	A	REDWN W/CHG (1-6)REV NOTE 1A, 1B, 1C, 2, 3A, 5 (7)ADDED NOTE 3B (8)RMV ±2° FROM TOL BLK (9)ADDED ±2° TO FIELD OF DWG			
		(AWG U1863)	03-05-09	KAS	BD

PART NO. 12338175

DWG A	UNLESS OTHERWISE SPECIFIED: DIMENSIONS ARE IN INCHES. TOLERANCES ON 2 PLACES ±.03 3 PLACES ±.010	CONTRACT NUMBER DAAE07-99-C-5027	DESIGN ACTIVITY U.S. ARMY TANK-AUTOMOTIVE COMMAND WARREN, MICHIGAN 48397-5000	
		CONTRACTOR AM General Corp ENGINEERING & TECHNICAL SERVICE DIV. LIVONIA, MICHIGAN	BRACKET, BODY MOUNT, REAR	
	DA AUDIT L HERR	DRAWN BY A.E. WHITE / DATE(YR-MO-DA) 85-09-13		
	GOVT QA APPROVAL NOT REQUIRED	CHECKER R. NEMETH / ENGINEER T. YANUS		
12338233 / HMMWV	DESIGN MANAGER/LEADER M RANSOME	DRAWING APPROVAL W GRAY	SIZE D / CAGE CODE 19207	12338175
NEXT ASSY / USED ON	MATL ENGR D FISK	DESIGN APPROVAL G KESEK	SCALE 1/1 / UNIT WT	SHEET
APPLICATION				

INTERPRET DRAWING IN ACCORDANCE WITH STANDARDS PRESCRIBED BY DOD-STD-100

5582763 D-7-18-84 COMPUTER GENERATED

DWG NO. 12338175 SH

REVISION				
ZONE	REV	DESCRIPTION	DATE	APPROVED
B-4	A	(1)REVISED NOTE 3	4-1-87	AW
		INITIAL RELEASE AMG N2900-12		
C4 B4	B	(1-2)ADDED NOTE 1C, 1D (AMG R5644)	92-01-31	
B4 A3	C	(1)REV NOTE 3(2)ADDED M1123 (AMG U1745)	99-12-10	ML

NOTES:

1. MATERIAL:
   A. STEEL, CARBON
      HR, CQ, P&O
      SPEC ASTM A569
      .1196 THICK

   B. ALTERNATE MATERIAL:
      STEEL, CARBON
      CR, CQ
      SPEC ASTM A366
      .1196 THICK

   C. ALTERNATE MATERIAL:
      STEEL HSLA
      GR. 950D
      SPEC SAE J410
      .1196 THICK

   D. ALTERNATE MATERIAL:
      STEEL HSLA
      TYPE 4
      SPEC ASTM A606
      .1196 THICK

2. REMOVE ALL BURRS AND SHARP EDGES

3. FINISH:
   FINISH IAW DRAWING 12469113 OR 12469120,
   TOPCOAT COLOR SHALL BE BLACK 37030

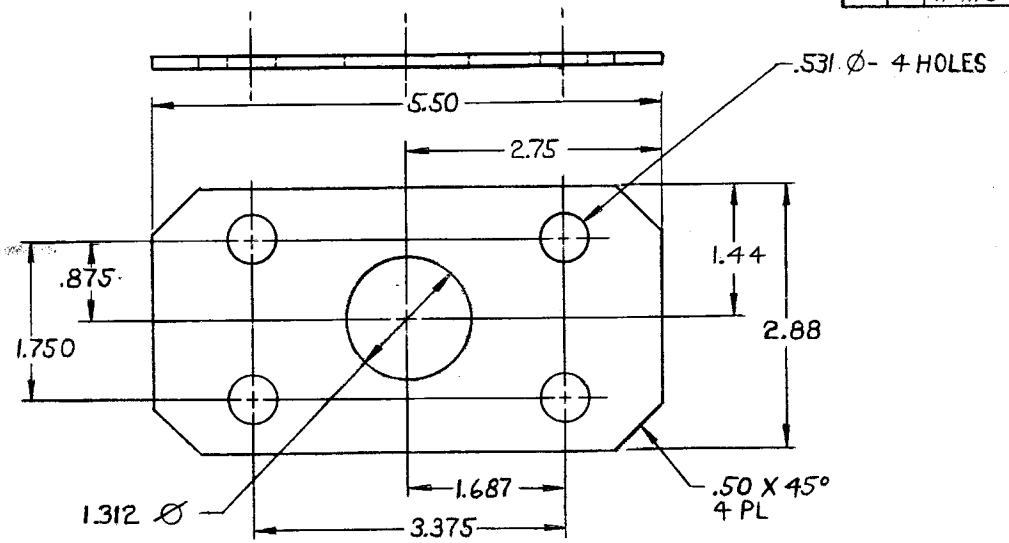

PART NO. 12338195

12338234	M1123	
12338233	HMMWV	
SEE ENGINEERING RECORDS		
NEXT ASSY	USED ON	
APPLICATION		

UNLESS OTHERWISE SPECIFIED DIMENSIONS ARE IN INCHES

TOLERANCES ON: 2 PLACES ±.03, 3 PLACES ±.010, ANGLES ±2°

QA AUDIT: K. Ashley Sr. 1/21/85

DESIGN MANAGER/LEADER: R. Kupp 10/2/85

MATL ENGR: D. Fink 10-2-85

CONTRACT NUMBER: DAAE07-83-C-R034

CONTRACTOR: AM General Corp. ENGINEERING & TECHNICAL SERVICES DIV. LIVONIA, MICHIGAN

DRAWN BY: A. Enoski DATE: 9-10-85

CHECKER: R. Nemeth ENGINEER: Jon Yanno 10-4

DRAWING APPROVAL

DESIGN APPROVAL: Joseph J. Adamo 10-25-85

U.S. ARMY TANK AUTOMOTIVE COMMAND
WARREN, MICHIGAN 48397-5000

SPACER, PINTLE HOOK

SIZE	FSCM NO.	
C	19207	12338195

SCALE 1/1 | UNIT WT. ——— | SHEET ———

DWG NO. 12338195 SH —

INTERPRET DRAWING IN ACCORDANCE WITH STANDARDS PRESCRIBED BY DOD - STD - 100

PRM, 7-85, 500, DPS-3, 73874

(5577592-B, B, 7-29-86) 1