Packaging Requirements Sheet 1 of 1
(Special Packaging Instruction)

NSN: **2540-01-194-3323**

A. Military preservation, packing, and marking for the item identified above shall be accomplished in accordance with the specific requirements identified below, all the applicable requirements of MIL-STD-2073-1D, and the Special Packaging Instruction contained in the TDP.

PRESERVATION: **MILITARY**
LEVEL OF PACKING: **B**
QUANTITY PER UNIT PACKAGE: **001**
SPI NUMBER: **AK11943323**
UNIT PACKAGE WEIGHT (lbs): **0024.4**
UNIT PACKAGE CUBE (cubic feet): **0001.210**
UNIT PACKAGE SIZE (length x width x depth inches): **019.7** x **011.8** x **009.0**

B. Unitization: Shipments of identical items going to the same destination shall be palletized if they have a total cubic displacement of 50 cubic feet or more unless skids or other forklift handling features are included on the containers. Pallet loads must be stable, and to the greatest extent possible, provide a level top for ease of stacking. A palletized load shall not exceed 4,000 pounds and should not exceed 52 inches in length or width, or 54 inches in height. The load shall be contained in a manner that will permit safe handling during shipment and storage.

C. Marking: In addition to any special markings called out on the SPI, all unit packages, intermediate packs, exterior shipping containers, and, as applicable, unitized loads shall be marked in accordance with MIL-STD-129N, including bar coding iaw ANSI/AIM-BC1, Uniform Symbology Specification Code 39.

D. This SPI has been validated and the method of preservation/packing has proven successful in meeting the needs of the military distribution system, including indeterminate storage and shipment throughout the world. Special instructions and/or tailoring of the SPI is detailed in the Supplemental Instructions in Paragraph E below. A prototype package is required to validate the sizes and fit requirements of the SPI. Minor dimensional and size changes are acceptable provided contractor notifies the ACO 60 days prior to delivery. Any design changes or changes in the method of preservation that provide a cost savings without degrading the method of preservation or packing or affecting the serviceability of the item will be considered and responded to within 10 days of submission to ACO. Government reserves the right to require testing to validate alternate industrial preservation methods, materials, alternate blocking, bracing, cushioning, and packing.

E. SUPPLEMENTAL INSTRUCTIONS:

SPECIAL PACKAGING INSTRUCTION

Form Approved
OMB No. 0704-0188

1. PART OR DRAWING NO. 10530 B	(CAGE) (78385)	NOMENCLATURE HEATER	2. CODE INDENT 19207	3. SPI NUMBER AK 11943323
4. NATIONAL STOCK NO. 2540-01-1943323			5. DATE OF DRAWING 3-25-96	6. REVISION B
7. QUP 1 EA	8. ICQ NONE	9. UNIT PACK WT. (LBS) 24.4	10. UNIT PACK CU (CU FT) 1.210	11. UNIT PACK SIZE (INCHES) 19.7 x 11.8 x 9.0

12. PRESERVATION	
a. LEVEL A	MIL-P-116 METHOD IA-14
b. LEVEL B	NOT APPLICABLE
13. CLEANING	MIL-P-116 PROCESS C-1
14. DRYING	MIL-P-116
15. PACKING	
a. LEVEL A	MIL-STD-2073-1
b. LEVEL B	MIL-STD-2073-1
16. MARKING	MIL-STD-129

18. STEPS	19. REQD	20. DESCRIPTION
1 B		CUSHIONING: SEE SHEET 2
2C		CONTAINER: PPP-B-636, ST RSC, TY CF, GR 275
		CL DOM, SIZE 11 x 8 3/8 x 18 3/8
3		BARRIER: MIL-B-117, ST 1, TY I, CL E
		SIZE 22 x 32
4C		CONTAINER: PPP-B-636, ST RSC, TY CF, GR W5C,
		CL WR, SIZE 11½ x 8 3/8 x 19 1/8

17. NOTES / DRAWINGS

A. INSPECT PRESERVATION AND UNIT PACK IN ACCORDANCE WITH MIL-STD-2073-1. INSPECT THE PACKING IN ACCORDANCE WITH MIL-STD-1186 AND THE APPLICABLE CONTAINER SPECIFICATION.

B. SEE SHEET 2 FOR CUSHIONING.

C. CLOSURE SHALL BE IN ACCORDANCE WITH CONTAINER SPECIFICATION.

SPECIAL PACKAGING INSTRUCTION *(Continuation Sheet)*

Form Approved
OMB No. 0704-0188

1. PART OR DRAWING NO. 10530 B (78385) HEATER	**2. CODE INDENT** 19207	**3. SPI NO.** AK 11943323
4. NATIONAL STOCK NO. 2540-01-1943323	**5. DATE SUBMITTED** *(YYMMDD)* 3-25-96	**6. REVISION** B

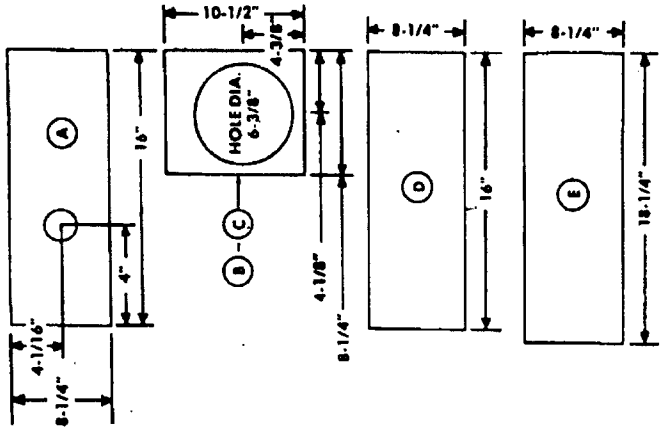

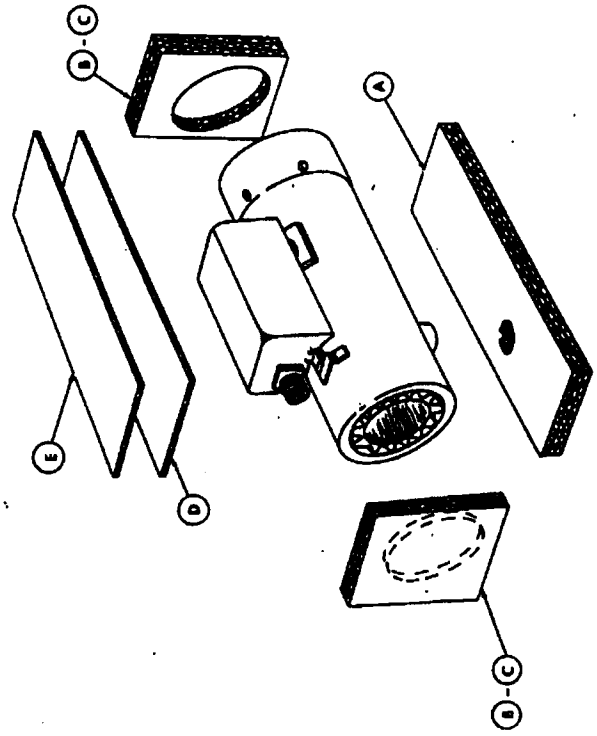

1. PADS "A" (2PCS.) SHALL CONFORM TO PPP-F-320, TYPE CF, CLASS DOM, VARIETY I.W. HOLES ARE TO BE CUT IN BOTH PIECES. GLUE PIECES TOGETHER WITH SUITABLE WATERPROOF ADHESIVE IN ACCORDANCE WITH MIL-A-140A. PAD "A" IS TO BE PLACED UNDER HEATER ASSEMBLY AS SHOWN IN SKETCH

2. PADS "B" AND "C" (2 PCS. EACH) SHALL CONFORM TO PPP-F-320, TYPE CF, CLASS DOM, VARIETY I.W. HOLES ARE TO BE CUT IN 1 PIECE OF PADS "B" AND "C". GLUE PIECES TOGETHER WITH SUITABLE WATER PROOF ADHESIVE IN ACCORDANCE WITH MIL-A-140A. PADS "B" AND "C" ARE TO BE PLACED ON EITHER END OF HEATER ASSEMBLY AS SHOWN IN SKETCH

3. PAD "D" SHALL CONFORM TO PPP-F-320, TYPE CF, GRADE 2/3, CLASS DOM, VARIETY S.W. PAD "D" SHALL BE PLACED ON TOP OF HEATER ASSEMBLY AS SHOWN IN SKETCH

4. PAD "E" SHALL CONFORM TO PPP-F-320, TYPE CF, CLASS DOM, VARIETY D.W. PAD "E" SHALL BE PLACED ON TOP OF PAD "D" AS SHOWN IN SKETCH

CONTAINERS AND BAG WERE NOT OF SKETCH FOR CLARITY

☆ U.S. Government Printing Office: 1987