1. MATERIAL: QUALIFIED RUBBER COMPOUND PER MIL-PRF-11891
2. ADHESION VALUE PER MIL-PRF-11891

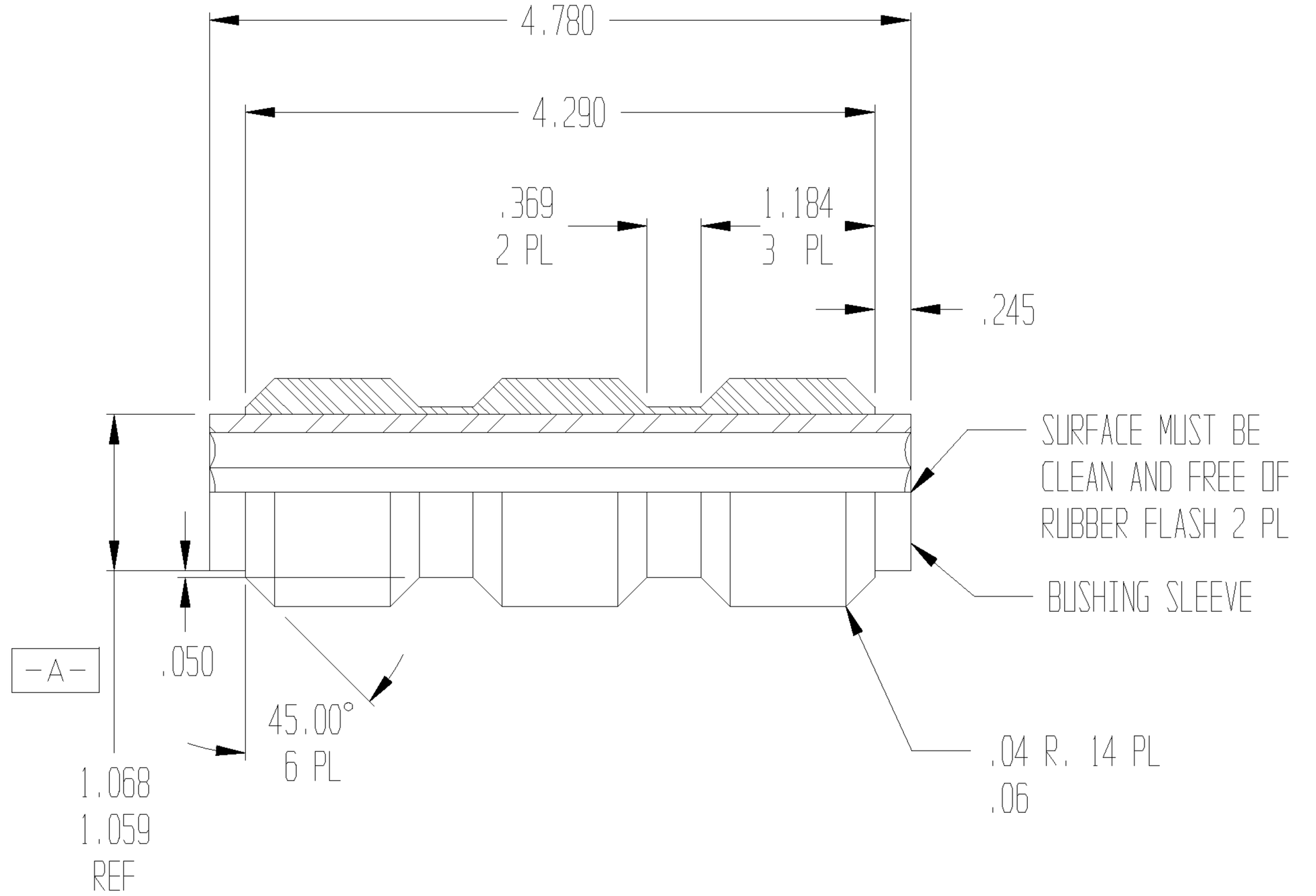

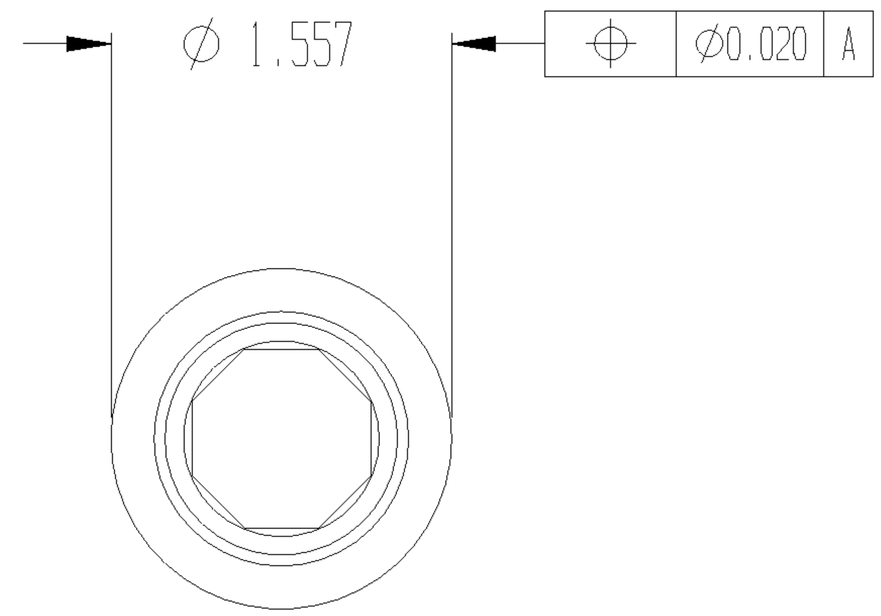

2

REV	DESCRIPTION	DATE	APPROVAL

DO NOT SCALE DRAWING

UNLESS OTHERWISE SPECIFIED DIMENSIONS ARE IN INCHES.
TOLERANCES:
3 PLACE DECIMALS +/- .010
2 PLACE DECIMALS +/- .02
ANGLES +/- 2 DEG.

MICHIGAN TECHNOLOGICAL UNIVERSITY
KEWEENAW RESEARCH CENTER

T157 TRACK BUSHING
LONG BUSHING

PROJECT COORDINATOR	G. SIMULA	CHKD:	
DRAWN BY	D. ANDERSON	APPR:	
DATE	9-7-00	APPR:	
SCALE:	SIZE: D	DRAWING #	000907 -2
SHEET # 1	SHEETS 1		

Michigan Technological University is an equal opportunity educational institution/equal opportunity employer.