DW
13228
1669A001
97403
001
A
005
01
01
U
DA
T
N
E
6

SHEETS				STATUS OF REVISIONS				
5	4	3	2	ZONE	LTR	DESCRIPTION	DATE	APPROVED
A	A	A	A		A	OUTLINE AND PATTERN REVISED	96-03-27	MB
						CAD MAINTAINED. CHANGES SHALL BE INCORPORATED BY THE DESIGN ACTIVITY.		

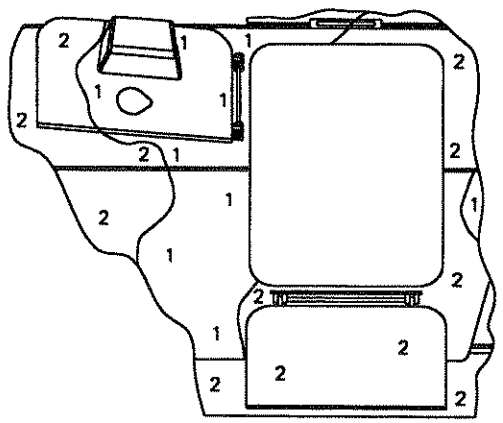

VIEW SHOWING DOOR IN OPEN POSITION

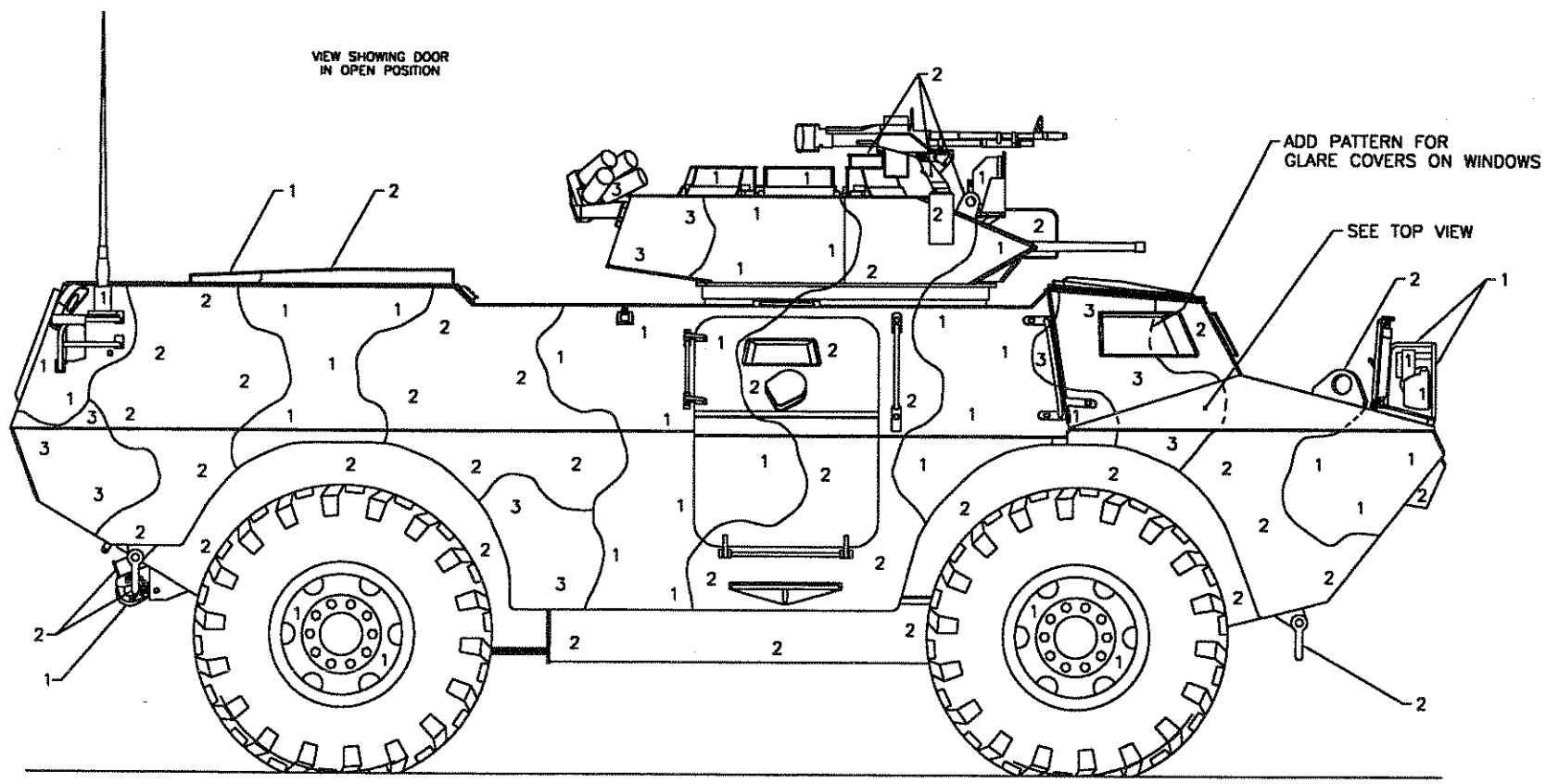

RIGHT SIDE VIEW

NOTES:

1. CAMOUFLAGE PAINTING SHALL BE IN ACCORDANCE WITH MIL-C-53072 UNLESS OTHERWISE SPECIFIED BY THE PROCURING AGENCY.
2. ANY REVISION TO THIS CAMOUFLAGE PATTERN MUST BE APPROVED BY CAMOUFLAGE APPLICATIONS TEAM, US ARMY NIGHT VISION DIRECTORATE, ATTN: AMSEL-RD-GSID-CA.
3. MAINTENANCE AND ACCURACY OF THIS OBJECT OUTLINE IS THE RESPONSIBILITY OF THIS ITEM'S MAJOR SUBORDINATE COMMAND.

DISTRIBUTION STATEMENT A.
APPROVED FOR PUBLIC RELEASE;
DISTRIBUTION IS UNLIMITED.

WARNING

TREAT AND PAINT EXTERNAL HIGH TEMPERATURE SURFACES (400° F) IN ACCORDANCE WITH MIL-P-14105

COLOR CODES

NO.	STANDARD	DESERT	WINTER/SNOW
1	BLACK	TAN 686	BLACK
2	GREEN 383	TAN 686	WHITE
3	BROWN 383	TAN 686	BROWN 383

UNLESS OTHERWISE SPECIFIED DIM/TOLERANCES ARE: part IN.
ONE PLACE (.X) ± —
TWO PLACE (.XX) ± —
THREE PLACE (.XXX) ± —
ANGLES ± —
THIRD ANGLE PROJECTION

FOR INTERPRETATION OF DRAWING MIL-STD-100 APPLIES
REMOVE BURRS AND BREAK SHARP EDGES | SHARP EDGES — TO —
FILLET RADII — TO —

MATERIAL

DRAWN BY LMW/HST	DATE 97-01-17	U.S. ARMY COMMUNICATION-ELECTRONICS COMMAND FORT BELVOIR, VIRGINIA 22060-5849
CHECKED BY TRH	97-02-07	US/CE STANDARDIZED CAMOUFLAGE PATTERN PAINTING FOR
CONTRACT NO. DAAK70-92-D-0004	2R341	ARMORED SECURITY VEHICLE
DESIGN APPROVAL		
DATE 97-02-07		
APPROVED FOR PROCUREMENT		SIZE A0 · CAGE CODE 97403 · DWG NO. 13228E1669
DATE 97-02-07		SCALE 1/8 · SHEET 1 OF 5

AMF 3/30/00 2:27 P.M.

REVISIONS				
ZONE	LTR	DESCRIPTION	DATE	APPROVED
	A	OUTLINE AND PATTERN REVISED	00-03-27	AW
		CAD MAINTAINED. CHANGES SHALL BE INCORPORATED BY THE DESIGN ACTIVITY.		

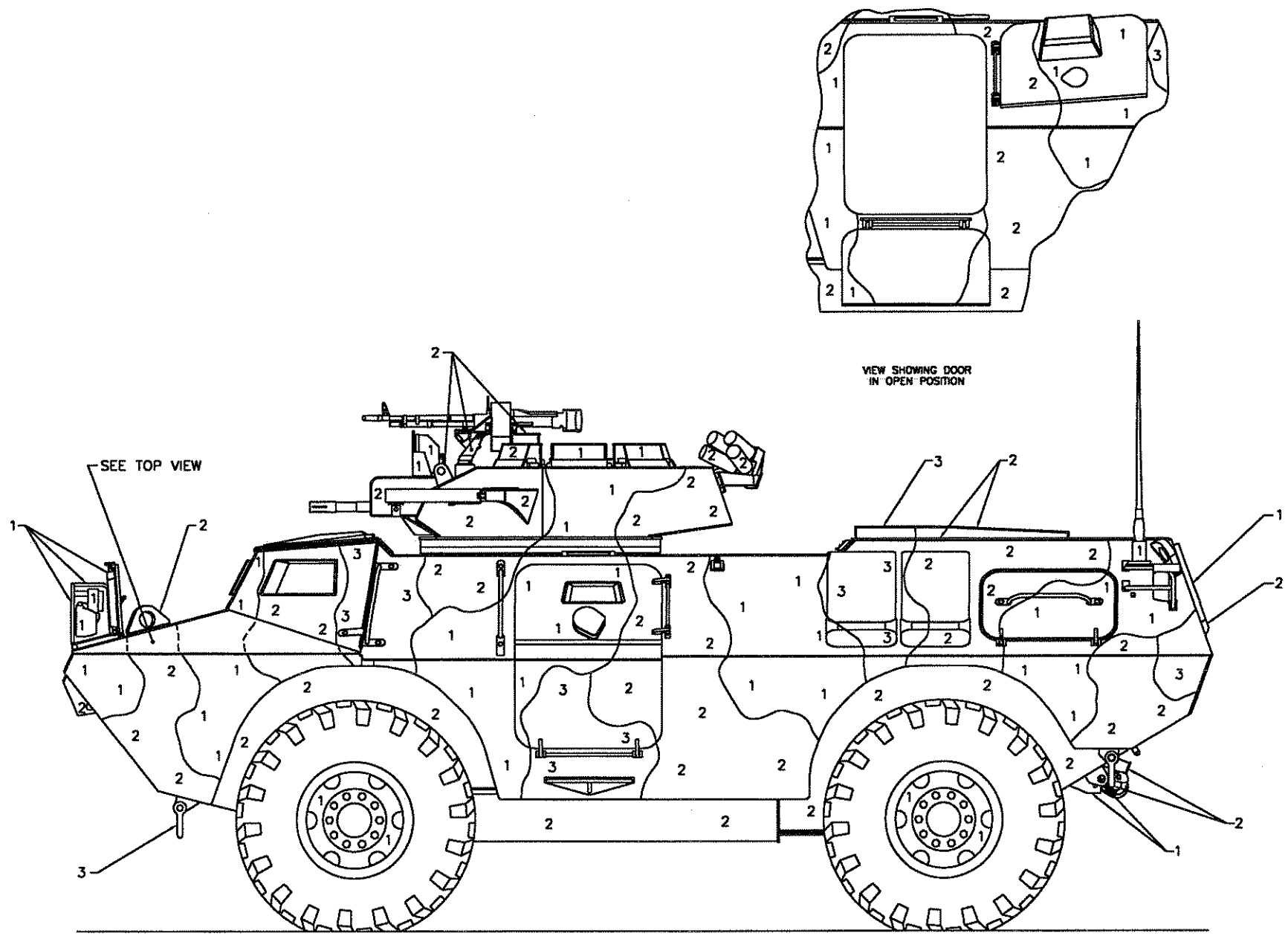

LEFT SIDE VIEW

COLOR CODES			
NO.	STANDARD	DESERT	WINTER/SNOW
1	BLACK	TAN 686	BLACK
2	GREEN 383	TAN 686	WHITE
3	BROWN 383	TAN 686	BROWN 383

UNLESS OTHERWISE SPECIFIED DIM/TOLERANCES ARE: ±mm IN.
ONE PLACE (.X) ±
TWO PLACE (.XX) ±
THREE PLACE (.XXX) ±
ANGLES ±
THIRD ANGLE PROJECTION

FOR INTERPRETATION OF DRAWING MIL-STD-100 APPLIES
REMOVE BURRS AND BREAK SHARP EDGES — SHARP EDGES TO FILLET RADII TO
MATERIAL

DRAWN BY LMW/HST — DATE 97-01-17
CHECKED BY TRH — 97-02-07
CONTRACT NO. 2R341 DAAK70-92-D-0004
DESIGN APPROVAL — DATE 96-02-07
APPROVED FOR PROCUREMENT — DATE 96-02-07

U.S. ARMY
COMMUNICATION-ELECTRONICS COMMAND
FORT BELVOIR, VIRGINIA 22060-5849

US/GE STANDARDIZED CAMOUFLAGE PATTERN PAINTING FOR

ARMORED SECURITY VEHICLE

SIZE A0 — CAGE CODE 97403 — DWG NO. 13228E1669
SCALE — SHEET 2

AMF 3/30/00 9:21 A.M.

DW 13228 1669A002 97403 002 A 005 01 01 U DA T N E 6

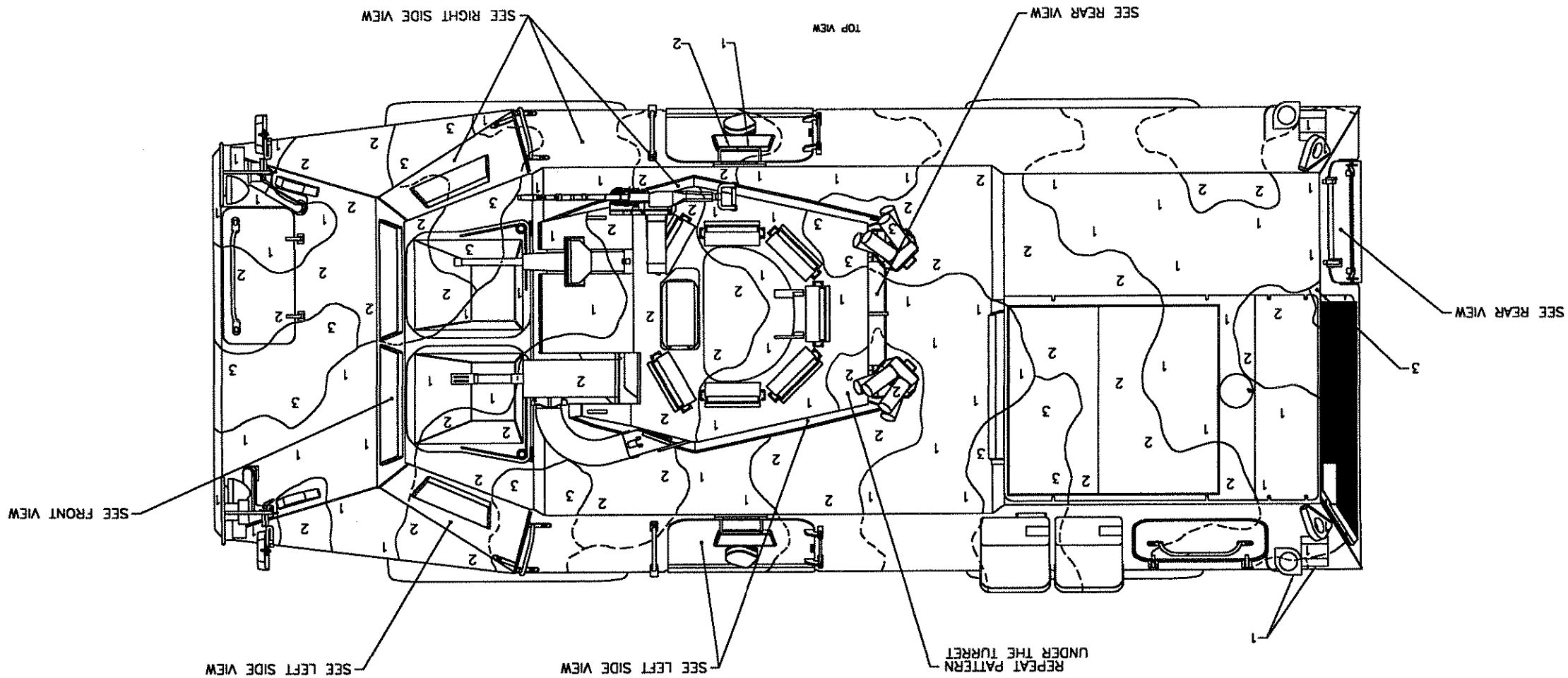

COLOR CODES			
NO.	STANDARD	DESERT	WINTER/SNOW
1	BLACK	TAN 686	BLACK
2	GREEN 383	TAN 686	WHITE
3	BROWN 383	TAN 686	BROWN 383

UNLESS OTHERWISE SPECIFIED DIM/TOLERANCES ARE: per BL		
ONE PLACE (.X) ±	THREE PLACE (.XXX)±	THIRD ANGLE PROJECTION
TWO PLACE (.XX) ±	ANGLES ±	
REMOVE BURRS AND SHARP EDGES	10	
BREAK SHARP EDGES	FILLET RADIUS	10
MATERIAL		

DRAWN BY LWM/HST	DATE 97-01-17	U.S. ARMY COMMUNICATION-ELECTRONICS COMMAND FORT BELVOIR, VIRGINIA 22060-5849
CHECKED BY TRH	97-02-07	
CONTRACT NO. DAAK70-92-D-0004	2R241	US/GE STANDARDIZED CAMOUFLAGE PATTERN PAINTING FOR
DESIGN APPROVAL		ARMORED SECURITY VEHICLE
APPROVED FOR PRODUCTION DATE 97-02-07		

SIZE	CAGE CODE	DWG NO.	
A0	97403		13228613669
SCALE		SHEET 3	

ZONE/LTR	DESCRIPTION	DATE	APPROVED
A	OUTLINE AND PATTERN REVISED	00-01-27	AW

REVISIONS

CAD MAINTAINED. CHANGES SHALL BE INCORPORATED BY THE DESIGN ACTIVITY.

DW 13228 1669A003 97403 A 003 01 01 0 0 0 0 3 1 3 8

AWF 9/12/00 9:30 AM

REVISIONS				
ZONE	LTR	DESCRIPTION	DATE	APPROVED
	A	OUTLINE AND PATTERN REVISED	00-03-27	AW
		CAD MAINTAINED. CHANGES SHALL BE INCORPORATED BY THE DESIGN ACTIVITY.		

DW 13228 1669AOC 97403 004 A 005 01 01 U DA T N E S

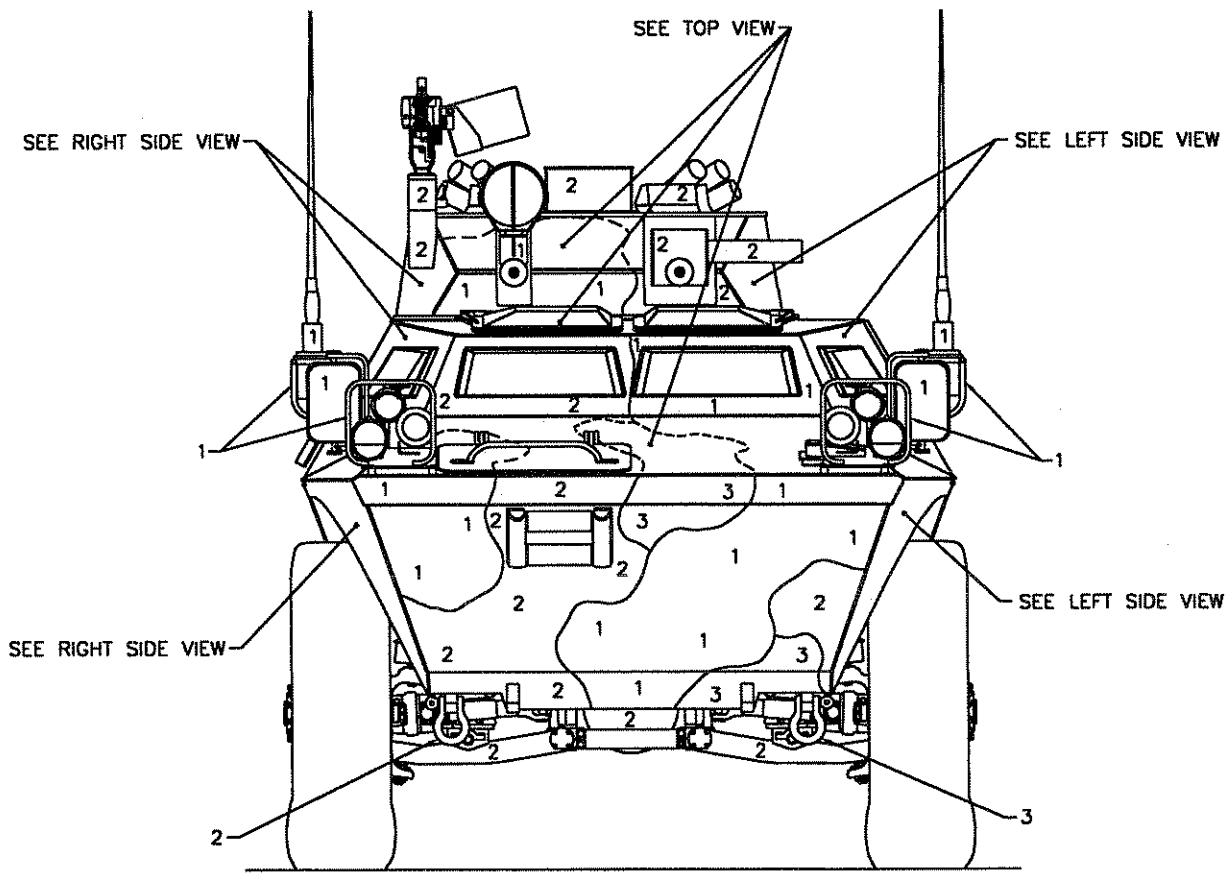

FRONT VIEW

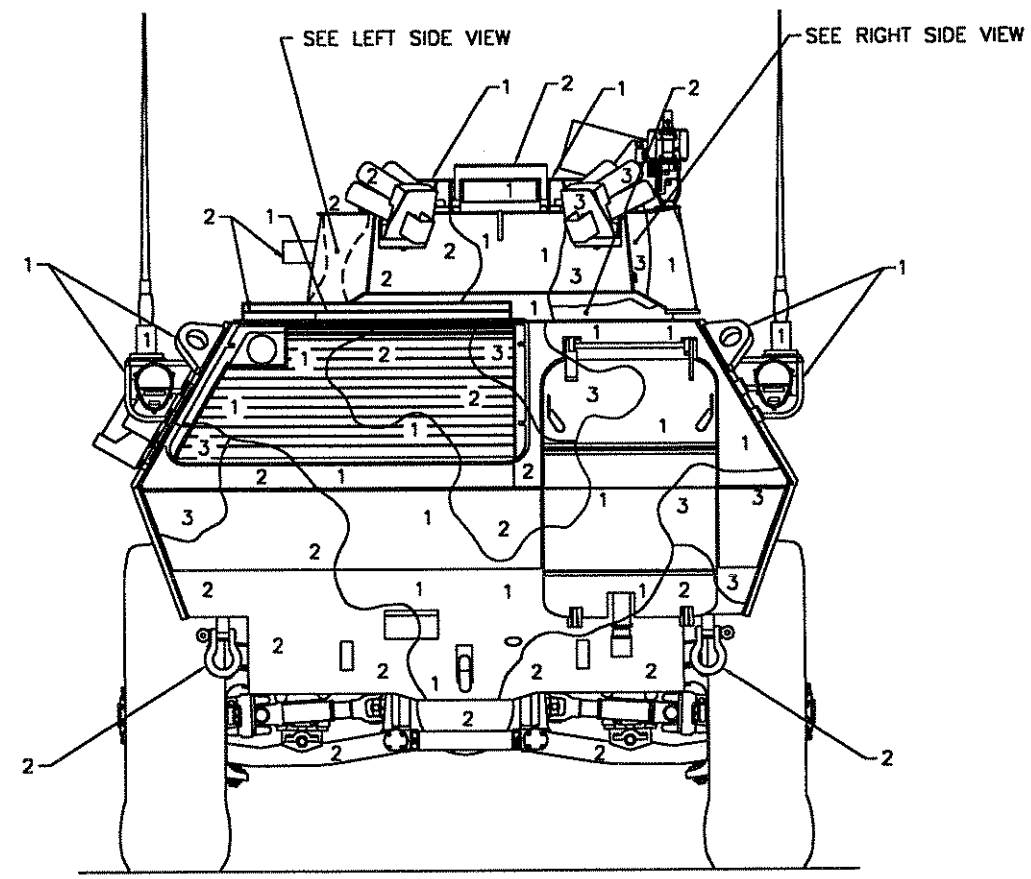

REAR VIEW

COLOR CODES			
NO.	STANDARD	DESERT	WINTER/SNOW
1	BLACK	TAN 686	BLACK
2	GREEN 383	TAN 686	WHITE
3	BROWN 383	TAN 686	BROWN 383

UNLESS OTHERWISE SPECIFIED DIM/TOLERANCES ARE: part NL
ONE PLACE (.X) ±
TWO PLACE (.XX) ±
THREE PLACE (.XXX) ±
ANGLES ±
THIRD ANGLE PROJECTION

FOR INTERPRETATION OF DRAWING MIL-STD-100 APPLIES
REMOVE BURRS AND BREAK SHARP EDGES | SHARP EDGES TO FILLET RADII TO
MATERIAL

DRAWN BY LMW/HST — DATE 97-01-17
CHECKED BY TRH — 97-02-07
CONTRACT NO. 2R341 DAAK70-92-D-0004
DESIGN APPROVAL — DATE 97-02-07
APPROVED FOR PROCUREMENT — DATE 97-02-07

U.S. ARMY
COMMUNICATION-ELECTRONICS COMMAND
FORT BELVOIR, VIRGINIA 22060-5849

US/GE STANDARDIZED CAMOUFLAGE PATTERN PAINTING FOR

ARMORED SECURITY VEHICLE

SIZE A0 | CAGE CODE 97403 | DWG NO. 13228E1669
SCALE | SHEET 4

HST 5/11/00 1:12 P.M.

DW
13228
1669A005
97403
005
A
005
01
01
U
DA
T
N
E
6

REVISIONS				
ZONE	LTR	DESCRIPTION	DATE	APPROVED
	A	OUTLINE AND PATTERN REVISED, LOCATING DIMENSIONS UPDATED	00-03-27	AM
		CAD MAINTAINED. CHANGES SHALL BE INCORPORATED BY THE DESIGN ACTIVITY.		

INSPECTION NOTES:

1. THIS SHEET TO BE USED FOR INSPECTION ONLY.
2. ALL DIMENSIONS ARE IN INCHES.
3. O DENOTES A LOCATION ON THE ITEM THAT IS USED AS A REFERENCE POINT. THE DISTANCE FROM THIS REFERENCE POINT TO THE EDGE OF THE BLACK BAND IS THE LOCATING DIMENSION. TOLERANCE ON THIS DIMENSION IS ± 1.00 INCH.
4. THE HORIZONTAL DISTANCE ACROSS A BLACK BAND IS THE BAND WIDTH. IF THIS DIMENSION IS SHOWN THE TOLERANCE IS ± 1.00 INCH.
5. Δ LOCATES A PHYSICAL FEATURE THAT THE PATTERN CONTOUR INTERSECTS WITHIN ± 1.00 INCH. NO LOCATING DIMENSION IS REQUIRED.
6. INSPECTION OF THE CAMOUFLAGE PATTERN WILL CONSIST OF CHECKING ALL LOCATING DIMENSIONS AND BAND WIDTHS SHOWN ON INSPECTION SHEET AS A MINIMUM. ALTERNATE OR ADDITIONAL REFERENCE POINTS, LOCATING DIMENSIONS AND BAND WIDTHS MAY BE INCLUDED IN THE INSPECTION. DIMENSIONS WILL BE DEVELOPED BY SCALING FROM PATTERN DRAWINGS. DO NOT USE INSPECTION SHEET TO DEVELOP DIMENSIONS. THE TOLERANCE FOR ALL DEVELOPED DIMENSIONS WILL BE ± 1.00 INCH.

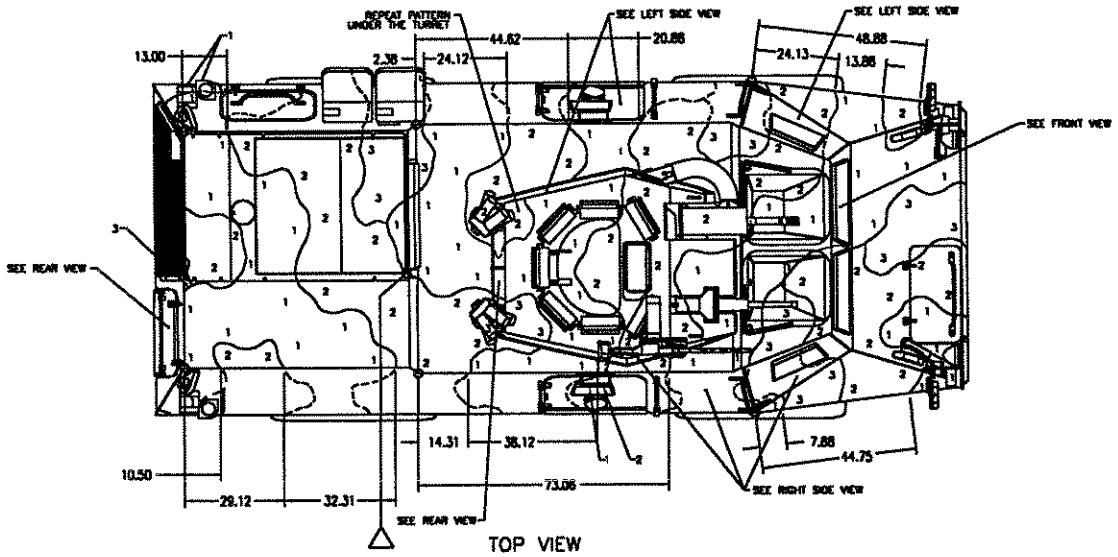

TOP VIEW

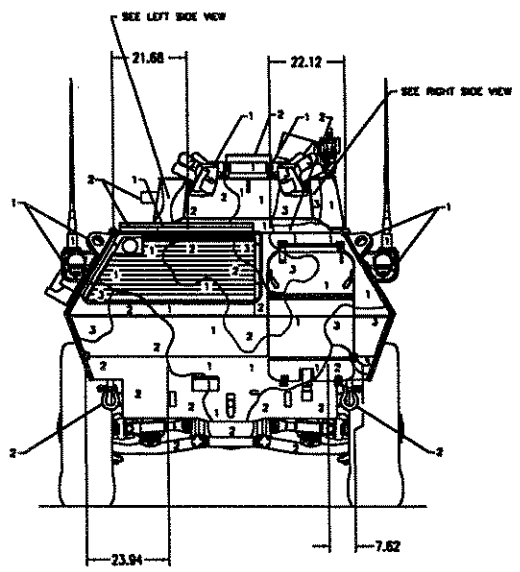

REAR VIEW

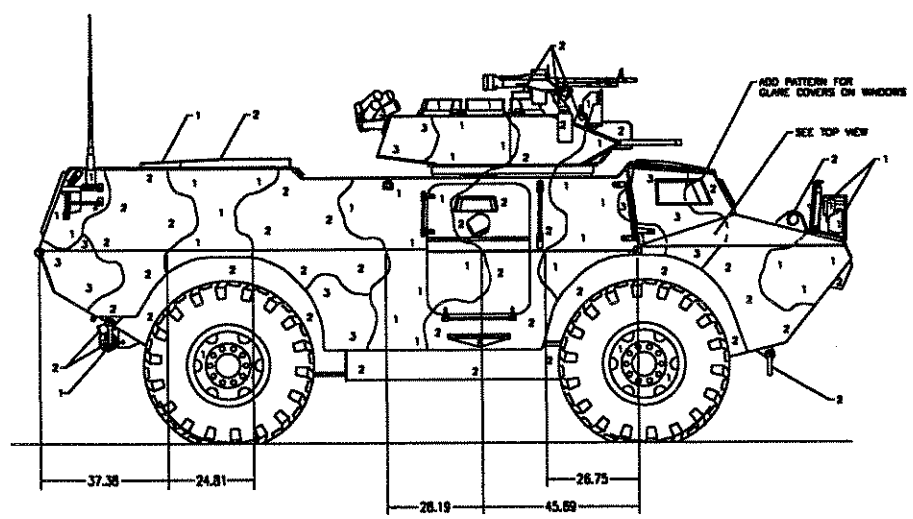

RIGHT SIDE VIEW

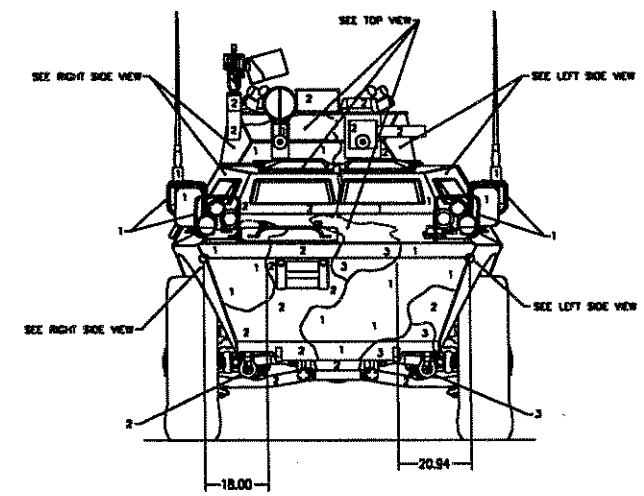

FRONT VIEW

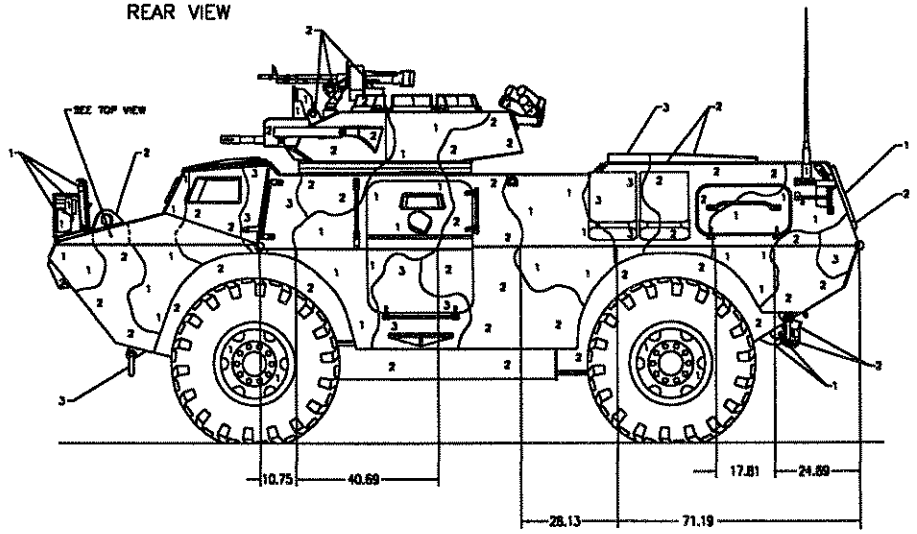

LEFT SIDE VIEW

INSPECTION SHEET

COLOR CODES			
NO.	STANDARD	DESERT	WINTER/SNOW
1	BLACK	TAN 686	BLACK
2	GREEN 383	TAN 686	WHITE
3	BROWN 383	TAN 686	BROWN 383

UNLESS OTHERWISE SPECIFIED DIM/TOLERANCES ARE: part IN.
ONE PLACE (.X) ±
TWO PLACE (.XX) ±
THREE PLACE (.XXX) ±
ANGLES ±
THIRD ANGLE PROJECTION

FOR INTERPRETATION OF DRAWING MIL-STD-100 APPLIES
REMOVE BURRS AND BREAK SHARP EDGES — SHARP EDGES TO; FILLET RADII TO
MATERIAL

DRAWN BY HST/AMF — DATE 97-01-17
CHECKED BY TRH — 97-02-07
CONTRACT NO. DAAK70-92-D-0004 — 2R341
DESIGN APPROVAL — DATE 97-02-07
APPROVED FOR PROCUREMENT — DATE 97-02-07

U.S. ARMY
COMMUNICATION-ELECTRONICS COMMAND
FORT BELVOIR, VIRGINIA 22060-5849

US/GE STANDARDIZED CAMOUFLAGE PATTERN PAINTING FOR

ARMORED SECURITY VEHICLE

SIZE A0 | CAGE CODE 97403 | DWG NO. 13228E1669
SCALE NONE | SHEET 5

AMF 5/12/00 9:32 A.M.