XXXXXXXXXXXXX, K, .FIDUCIAL, M915A3 .JFD

RELEASE NUMBER	REV LTR	ZONE	REVISION DESCRIPTION	BY	DATE	APPD
XXXXXX-XX	-	XX	INITIAL RELEASE	JFD	05/12/00	JLT

M915-A3/A5 MILITARY TRACTOR

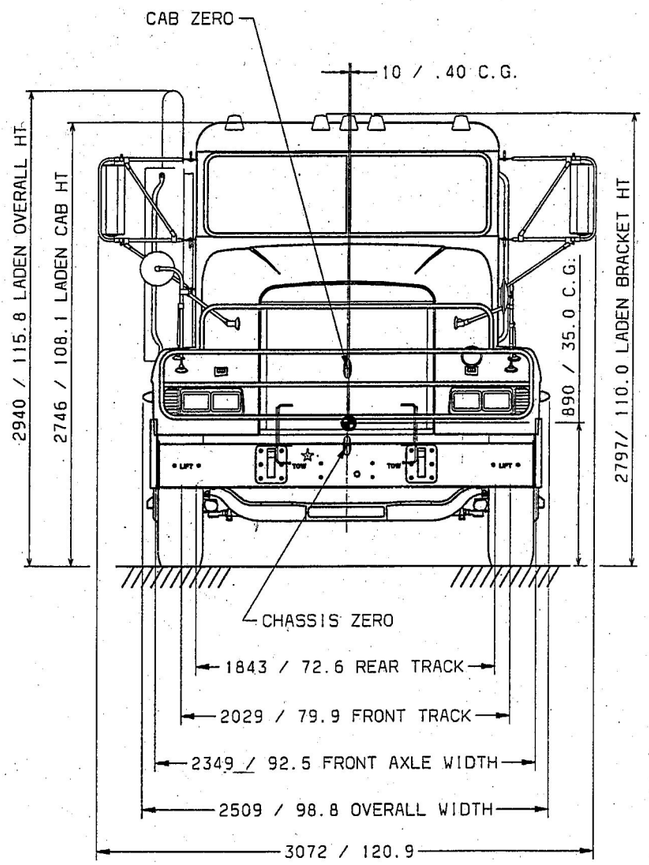

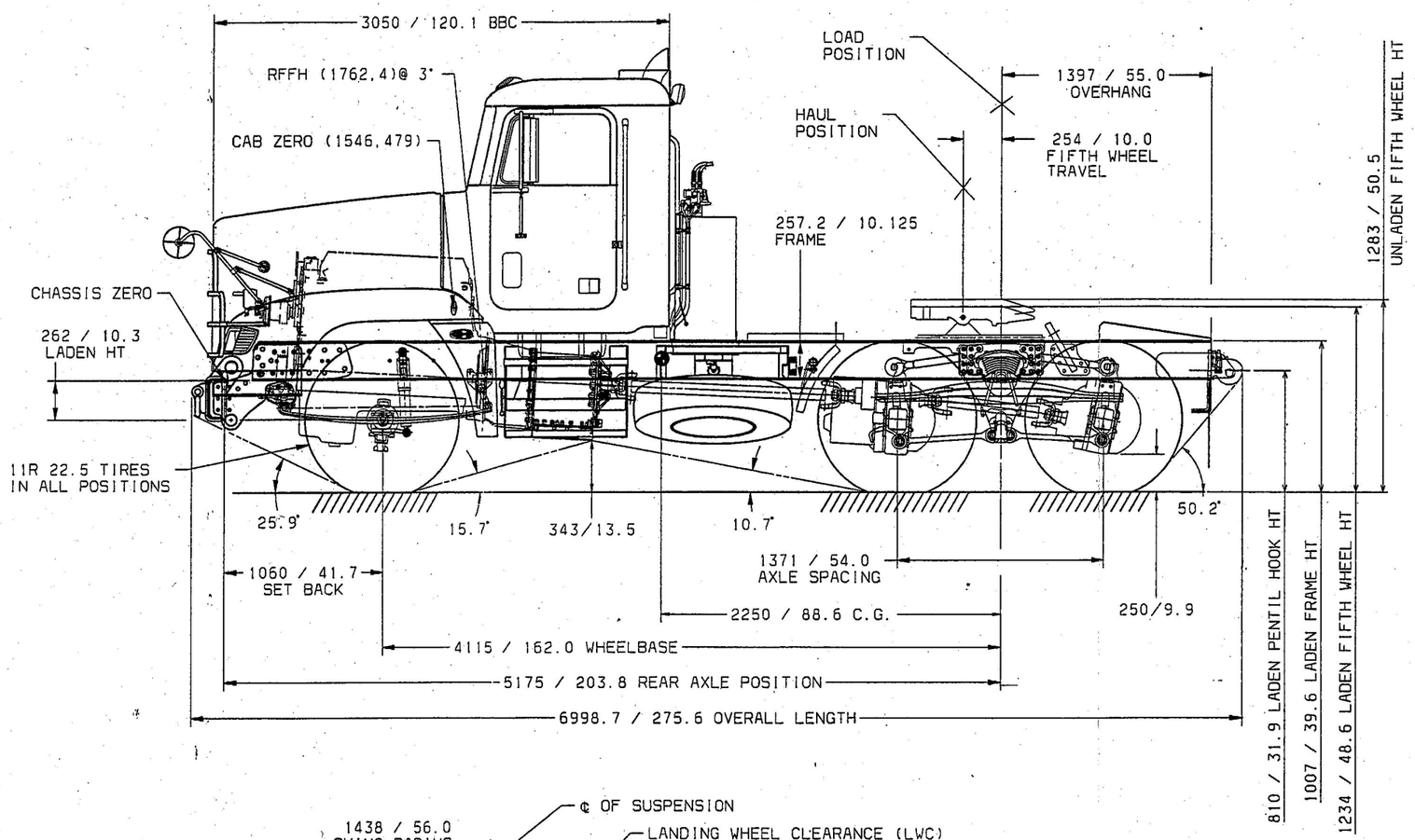

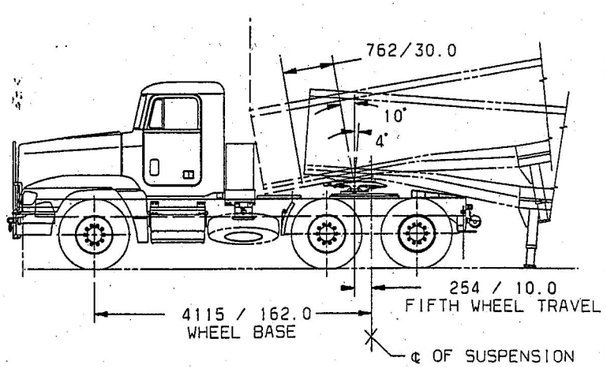

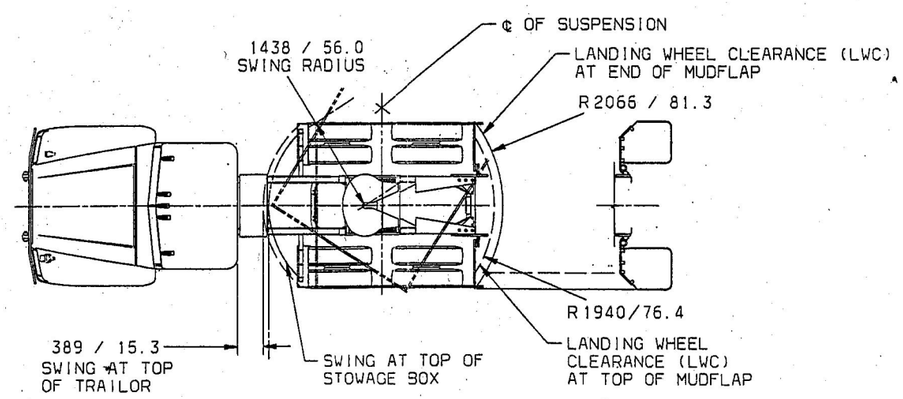

FREIGHTLINER LLC

THE INFORMATION CONTAINED HEREIN IS PROPRIETARY DATA, AND IS NOT FOR DISSEMINATION OR DISCLOSURE, IN WHOLE OR IN PART, FOR ANY PURPOSE OTHER THAN THAT FOR WHICH IT IS SUBMITTED, EXCEPT AS AUTHORIZED IN WRITING BY FREIGHTLINER CORPORATION.

MATERIAL APPROVAL N/A	DATE	UNLESS OTHERWISE NOTED, DIMENSIONS AND TOLERANCES ARE DEFINED ACCORDING TO ANSI STANDARD Y14.5M-1982, WITH EXCEPTIONS PER FREIGHTLINER EGM SECT 307.
DRAWN BY JFD-DECKER	DATE 01/27/00	
CHECKED BY JLT-TUBBS	DATE 02/21/00	
RESPONSIBLE ENGINEER JFD-DECKER	DATE 05/12/00	FINISH ANGLE PROJECTION — UNITS OF MEASURE MM
APPROVED BY JLT-TUBBS	DATE 05/12/00	RESPONSIBLE MFG. ENGR. N/A

DESCRIPTION: DWG-FIDUCIAL, M915A3, GVG

SUPPLEMENTARY DESCRIPTION: M915A3/A5 GVG

ITEM/DRAWING NUMBER: XXX | REVISION LETTER: K | SHEET NUMBER: 1 OF 1

PRELIMINARY

DO NOT SCALE COPIES OF THIS DRAWING

MODEL 1 x 1

LAST FILE- 00/05/24 08:52 PLOT DATE- MAY 24, 2000 SHEET FILE- B912.SHEET PLOT TIME- 08:53 USER ID- CATIA DRAW ID- XXXXXXXXXXXXX, K, .FIDUCIAL, M91543 .JFD

Drawing #1