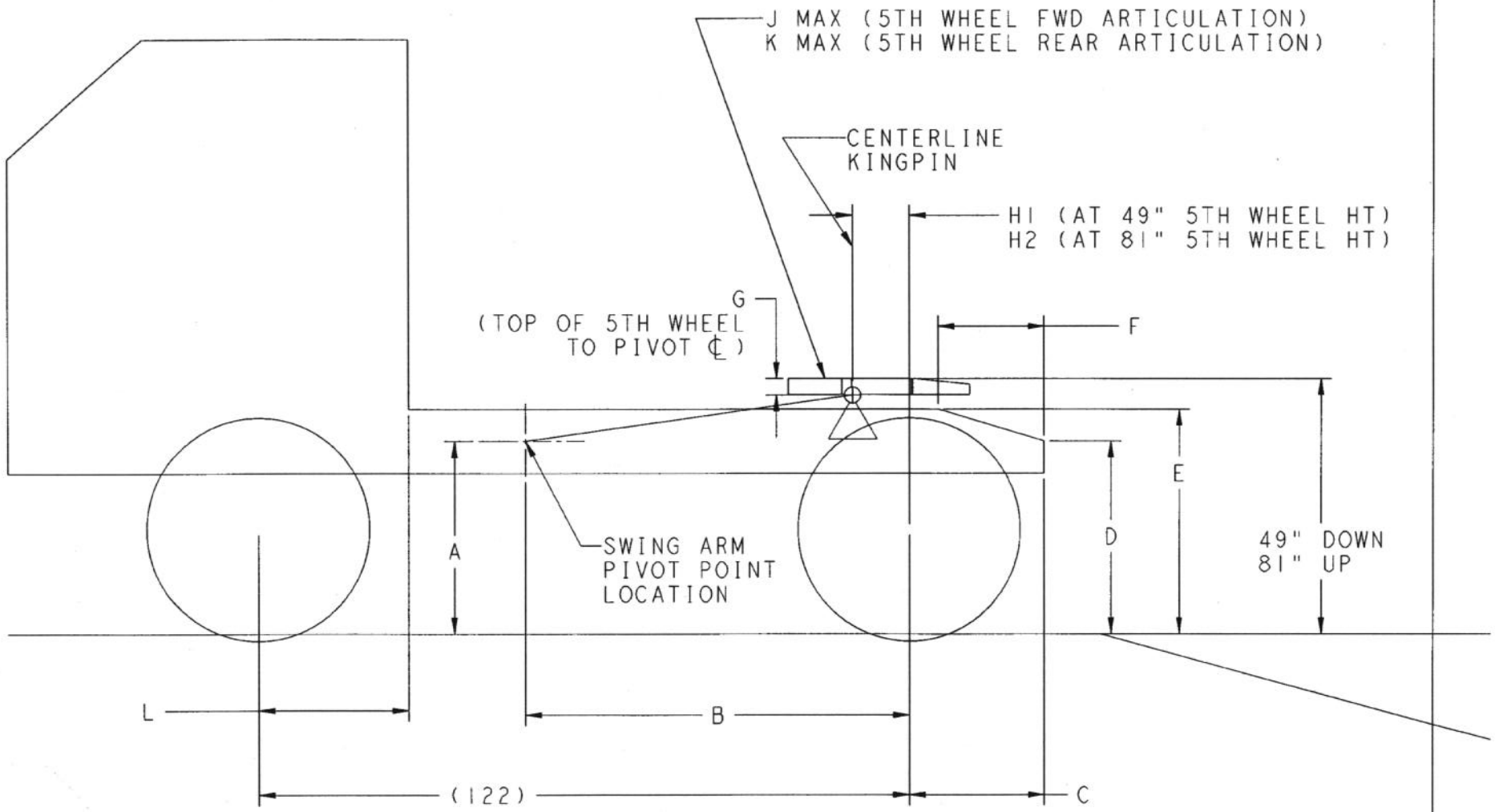

M878A2 DIMENSIONAL INFORMATION REQUIREMENTS