Form Approved
OMB No. 0704-0188

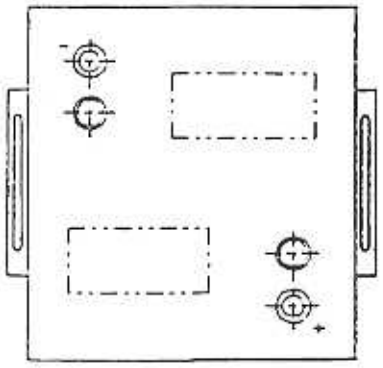

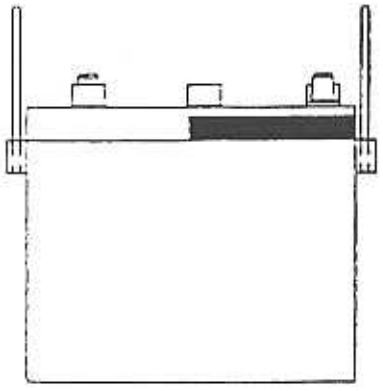

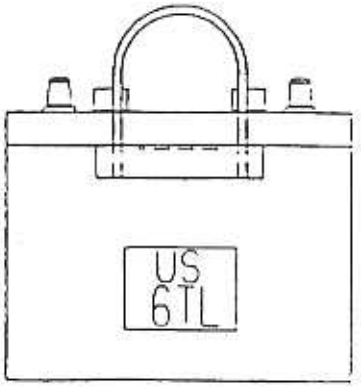

METRIC

NOTES:

1. FOR DETAILS OF CONSTRUCTION SEE SHEETS 2 THRU 7.
2. THE USE OF ASTERISKS (*) THROUGHOUT THE DOCUMENT INDICATES INTERNATIONAL AGREEMENT (SEE NOTE 7).

PREPARING ACTIVITY: AT CUSTODIANS: ARMY- NAVY- AIR FORCE- DLA- REVIEW: USER: PROJECT NUMBER: 6140-A760	MILITARY SPECIFICATION SHEET TITLE: BATTERY, STORAGE LEAD-ACID (LOW-MAINTENANCE) TYPE 6TL	SPECIFICATION SHEET NUMBER: MS52149G(AT) 8 September 1994 SUPERSEDING: MS52149F(AT) 27 MAY 1992 AMSC-NA FSC- 6140

DISTRIBUTION STATEMENT A. Approved for public release; distribution is unlimited.

Form Approved
OMB No. 0704-0188

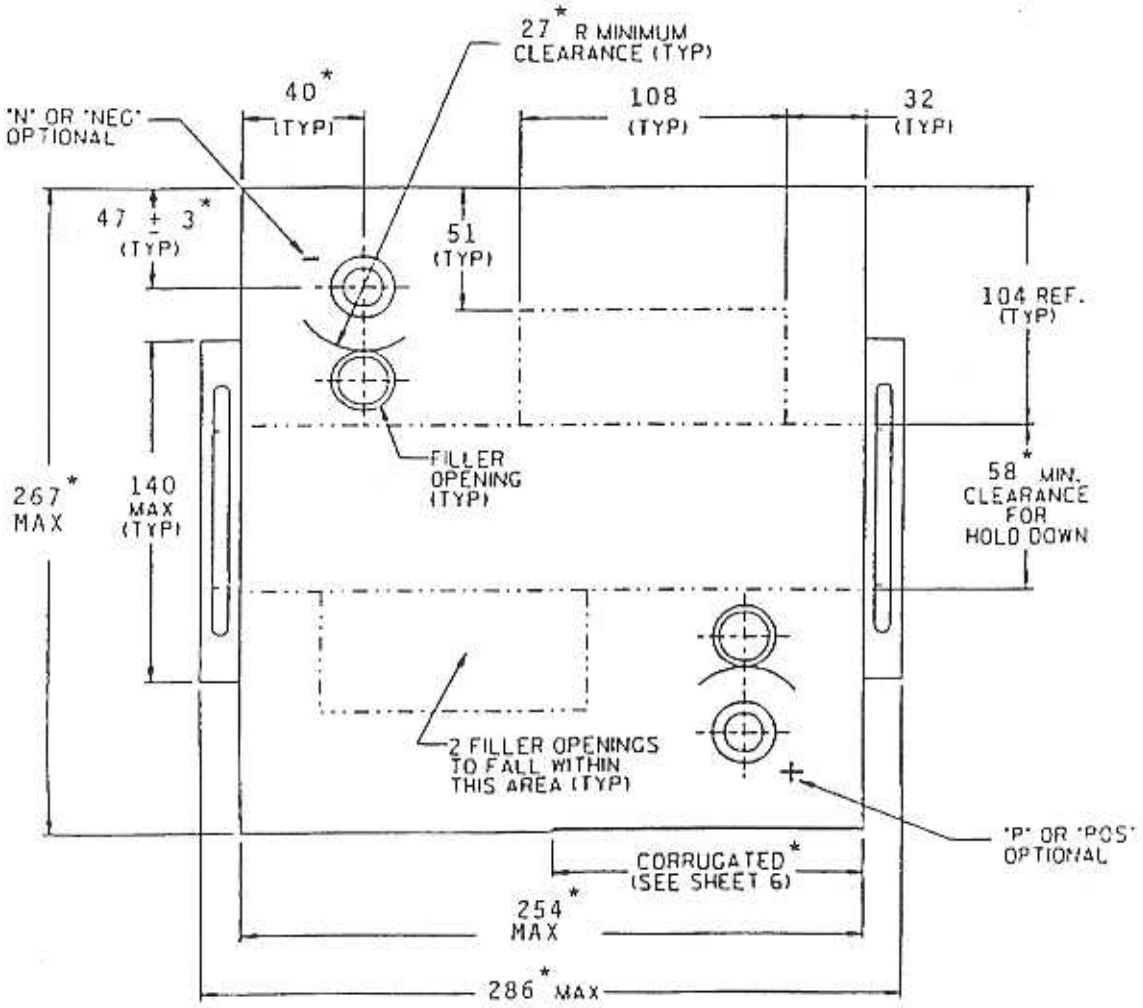

ARING ACTIVITY: AT DIANS: ARMY- NAVY- AIR FORCE- DLA- W:	MILITARY SPECIFICATION SHEET TITLE: BATTERY, STORAGE, LEAD-ACID (LOW-MAINTENANCE) TYPE 6TL	SPECIFICATION SHEET NUMBER: MS52149G(AT) 8 September 1994 SUPERSEDING: MS52149F(AT) 27 MAY 1992
CT NUMBER: 6140-A760		AMSC-NA FSC- 6140

IBUTION STATEMENT A. Approved for public release; distribution is unlimited.

Form Approved
OMB No. 0704-0188

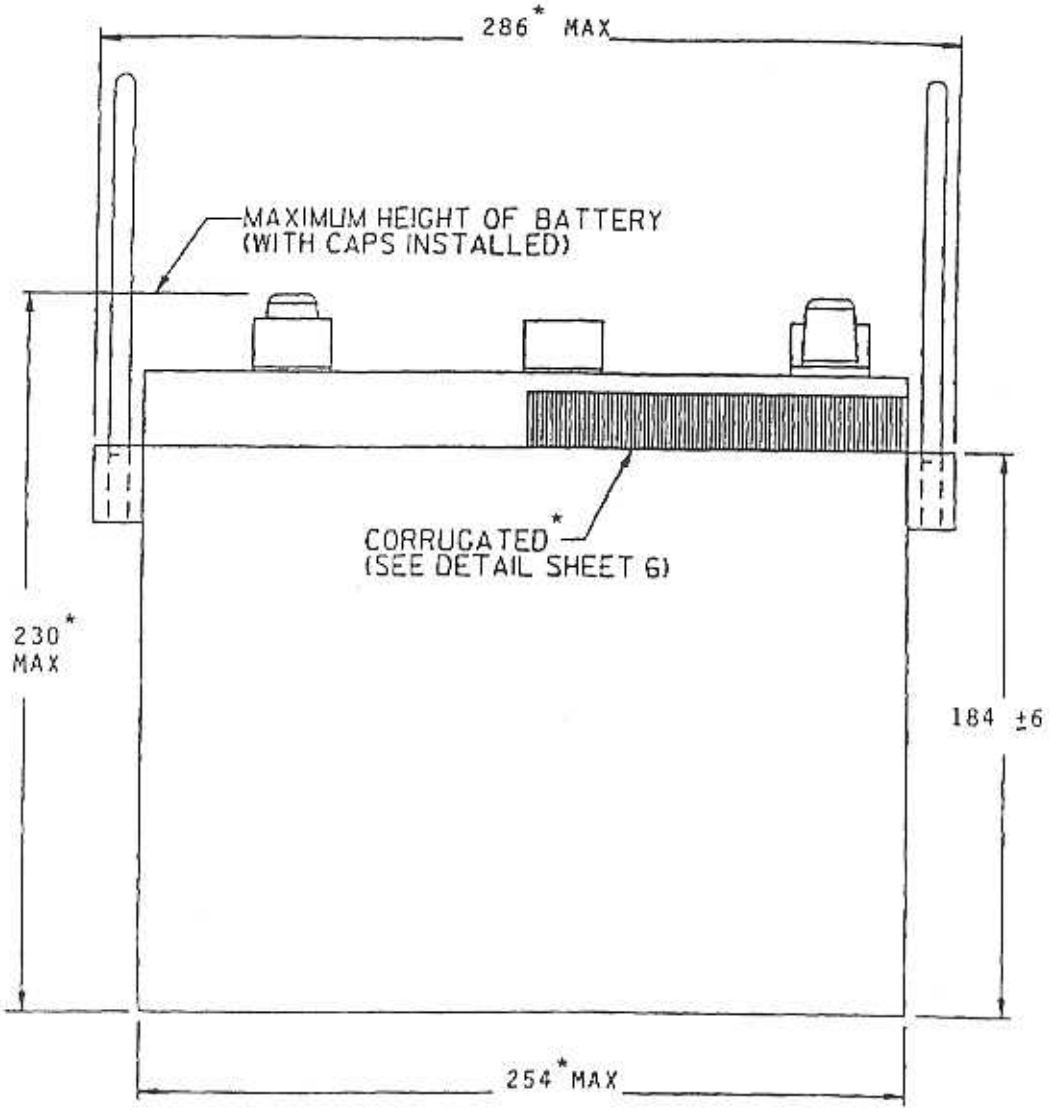

NOTE: OUTSIDE CORNERS SHOWN SQUARE TO INDICATE MAXIMUM DIMENSIONS. ACTUAL CONFIGURATION OPTIONAL. RIBBING AND DETAILING ON SIDES OF BATTERY ALSO OPTIONAL.

Tank-Automotive Command, Department of the Army, and is available for use by all Departments and Agencies of the Department of Defense.

shall consist of this specification sheet and the issue of the following specification listed in that issue of the DoDISS specified in the solicitation: MIL-B-62346

Form Approved
OMB No. 0704-0188

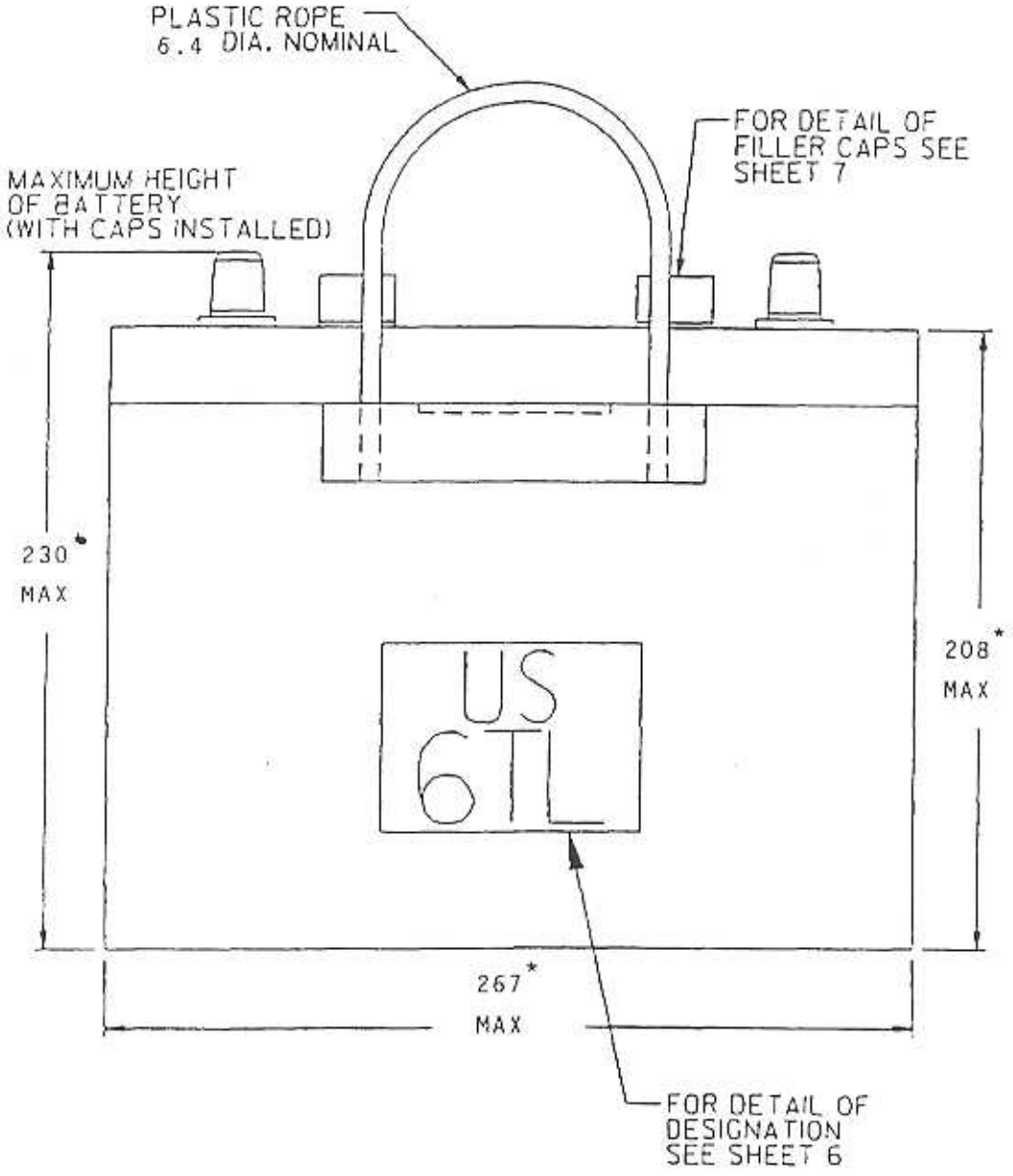

EPARING ACTIVITY: AT STODIANS: ARMY- NAVY- AIR FORCE- DLA- VIEW: ER: OJECT NUMBER: 6140-A760	MILITARY SPECIFICATION SHEET TITLE: BATTERY, STORAGE, LEAD-ACID (LOW-MAINTENANCE) TYPE 6TL	SPECIFICATION SHEET NUMBER: MS52149G(AT) 8 September 1994 SUPERSEDING: MS52149F(AT) 27 MAY 1992 AMSC-NA FSC- 6140

STRIBUTION STATEMENT A. Approved for public release; distribution is unlimited.

Form Approved
OMB No. 0704-0188

specified in the solicitation: MIL-R-62346

POSTS

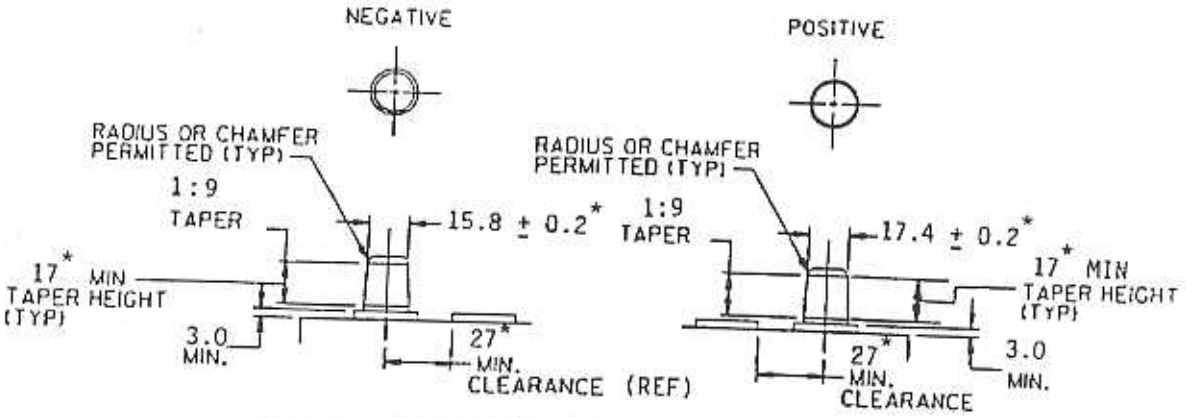

HANDLES (6TL)

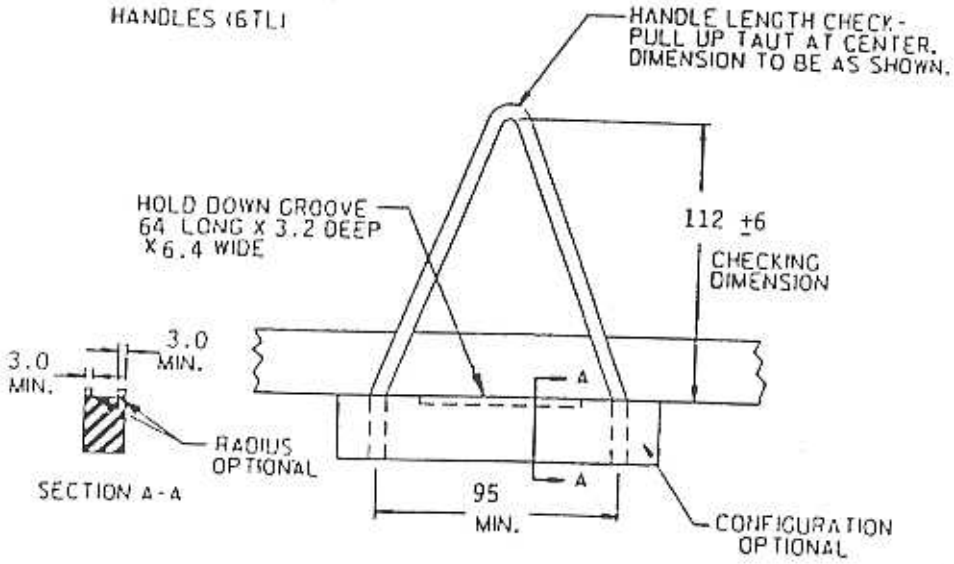

METHOD OF ROPE ATTACHMENT OPTIONAL

PREPARING ACTIVITY: AT CUSTODIANS: ARMY- NAVY- AIR FORCE- DLA- REVIEW: USER: PROJECT NUMBER: 6140-A760	MILITARY SPECIFICATION SHEET TITLE: BATTERY, STORAGE, LEAD-ACID (LOW-MAINTENANCE) TYPE 6TL	SPECIFICATION SHEET NUMBER: MS52149G(AT) 8 September 1994 SUPERSEDING: MS52149F(AT) 27 MAY 1992 AMSC-NA FSC

Form Approved
OMB No. 0704-0188

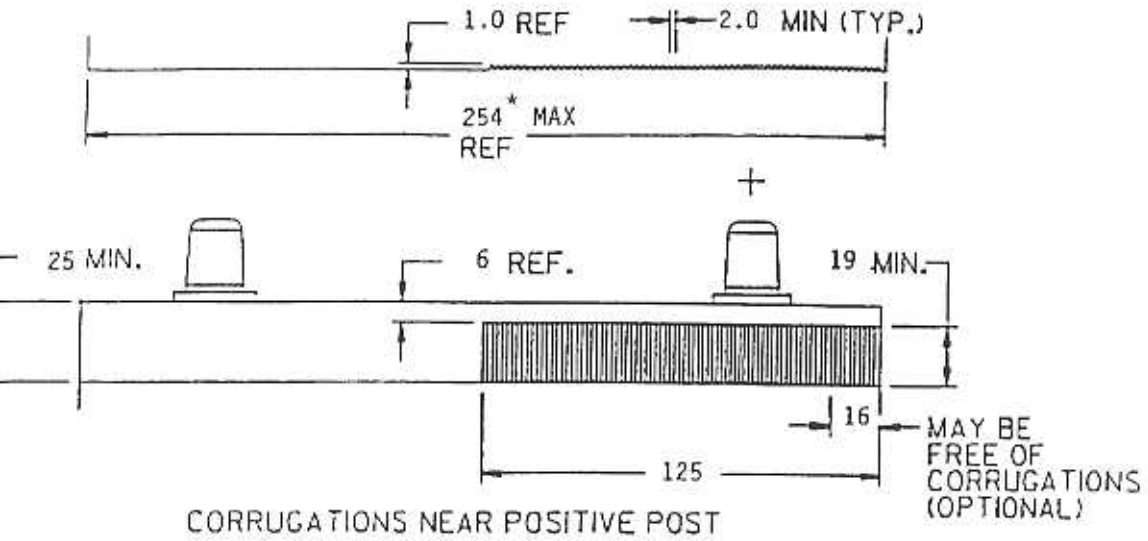

"US 6TL" MOLDED/DECAL DESIGNATION

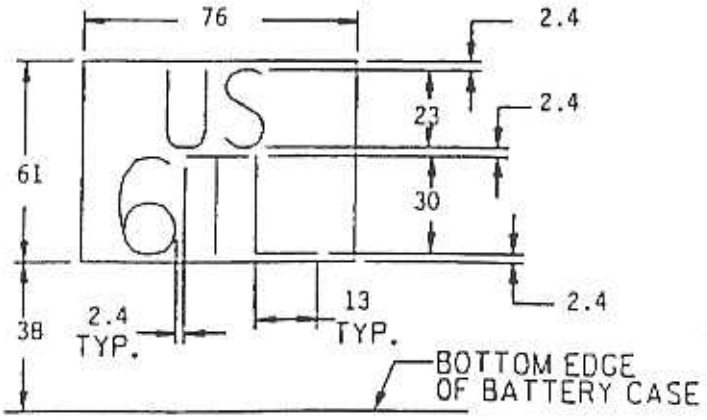

ALL DIMENSIONS MINIMUM.

ONE SIDE REQUIRED
(SECOND SIDE OPTIONAL)

RING ACTIVITY: AT DIANS: ARMY- NAVY- AIR FORCE- DLA- N: CT NUMBER: 6140-A760	MILITARY SPECIFICATION SHEET TITLE: BATTERY, STORAGE, LEAD-ACID (LOW-MAINTENANCE) TYPE 6TL	SPECIFICATION SHEET NUMBER: MS52149G(AT) 8 September 1994 SUPERSEDING: MS52149F(AT) 27 MAY 1992 AMSC-NA FSC- 6140

IBUTION STATEMENT A. Approved for public release; distribution is unlimited.

Form Approved
OMB No. 0704-0188

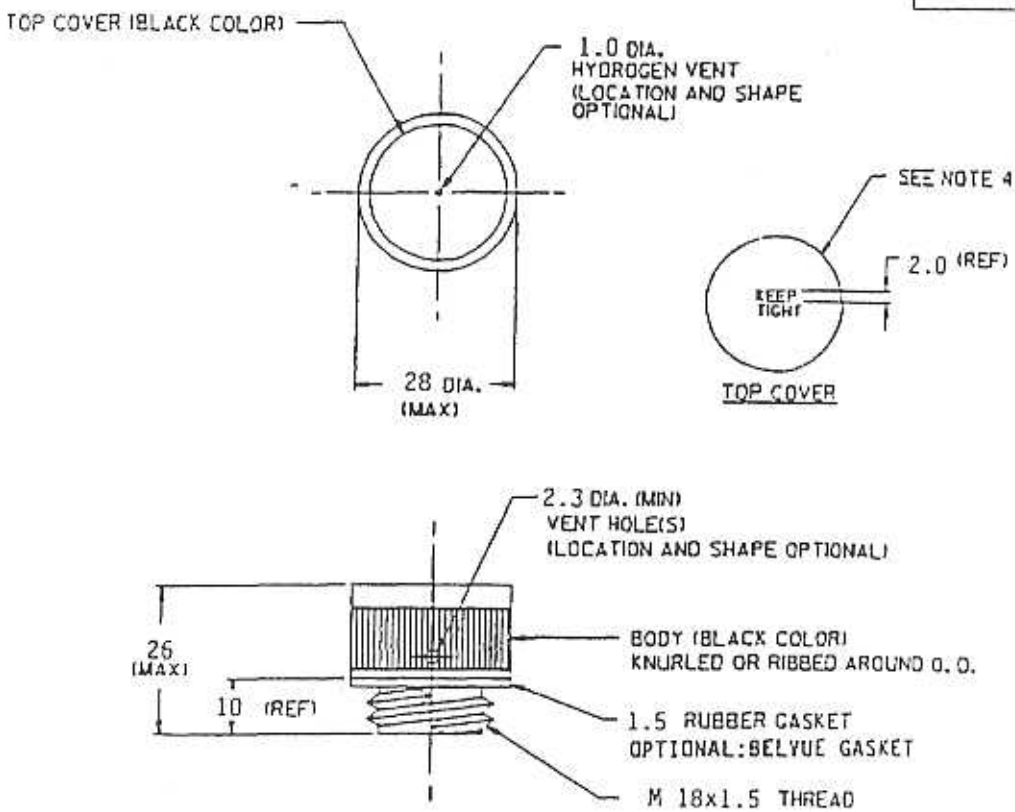

VENT CAP (TYPICAL OF 6)
MS52149-3

NOTES:

1. UNLESS OTHERWISE SPECIFIED, DIMENSIONS ARE IN MILLIMETERS. TOLERANCES ARE: ± 0.4 ON DECIMALS.
2. REFERENCED DOCUMENTS SHALL BE OF THE ISSUE IN EFFECT ON DATE OF INVITATIONS FOR BID.
3. UNLESS OTHERWISE SPECIFIED, MATERIAL SHALL BE POLYPROPYLENE, ULTRAVIOLET RESISTANT.
4. LETTERS ON TOP COVER SHALL BE BOLD GOTHIC. 0.5 MAXIMUM RELIEF.
5. THIS STANDARD TAKES PRECEDENCE OVER DOCUMENTS REFERENCED HEREIN.
6. CAP SHALL BE SUBMERSIBLE WITHOUT LEAKAGE PER PROCUREMENT SPECIFICATION.
7. VENT CAP(S) SHALL EXHIBIT FLAME RETARDANT CHARACTERISTICS PER SAE J1495.

PREPARING ACTIVITY: AT CUSTODIANS: ARMY- NAVY- AIR FORCE- DLA- REVIEW: USER: PROJECT NUMBER: 6140-A760	MILITARY SPECIFICATION SHEET TITLE: BATTERY, STORAGE, LEAD-ACID (LOW-MAINTENANCE) TYPE 6TL	SPECIFICATION SHEET NUMBER: MS52149G(AT) 8 September 1994 SUPERSEDING: MS52149F(AT) 27 MAY 1992 AMSC-NA FSC- 6140

Provided by IHS Not for Resale
Reproduced by IHS under license with U.S. Department of Defense.
Licensee=Boeing Specification Mailed Internal Issue of the DODISS
specified in the solicitation: MIL-B-62346

Form Approved
OMB No. 0704-0188

PHYSICAL AND ELECTRICAL REQUIREMENTS

CLASS	FE
NOMINAL WEIGHT (UNFILLED)	24 KG
NOMINAL WEIGHT (FILLED)	34 KG
NOMINAL VOLTAGE	12 VOLTS
RESERVE CAPACITY	200 MINUTES
DISCHARGE RATE AND TIME TO 7.2 V:	
AT -18°C	600 AMP 30 SEC
AT -40°C	350 AMP 30 SEC
CHARGING CONSTANT POTENTIAL (SEE NOTE 6)	15.0 VOLTS

QUALIFICATION AND QUALITY CONFORMANCE INSPECTION REQUIREMENTS

TESTS	MINIMUM VALUES
COLD ACTIVATION @ -1°C	
DISCHARGE RATE AND TIME TO 7.2 V	450 AMP 60 SEC MINIMUM
RESERVE CAPACITY	200 MINUTES
DISCHARGE RATE AND TIME TO 7.2 V:	
AT -18°C	600 AMP 30 SEC
AT -40°C	350 AMP 30 SEC
LIFE CYCLE CAPACITY TEST	235 CYCLES
AMP HR CAPACITY @ 20 HR RATE	120 AMP HR (6.0 AMPS)
RETENTION OF CHARGE 40°C:	
RESERVE CAPACITY AFTER 30 DAYS	175 MINUTES
STORAGE LIFE AFTER 90 DAYS	450 AMP @ 60 SEC
VIBRATION RESISTANCE RES. CAP	190 MINUTES

REQUIREMENTS:

1. ELECTROLYTE SHALL NOT BE FURNISHED FOR CHARGED AND DRY BATTERIES.
2. CHARGED AND WET BATTERIES SHALL BE FILLED WITH ELECTROLYTE AND READY TO USE.
3. SIX (6) SUBMERSIBLE FLAME RETARDANT VENT PLUGS SHALL BE LOCATED ONLY IN RESPECT TO REQUIRED MINIMUM DISTANCE FROM TERMINAL POSTS AND SIDES OF BATTERY.
4. MARKING SHALL CONSIST OF THE SPECIFICATION SHEET PART NUMBER AND MANUFACTURER'S IDENTIFICATION IN ACCORDANCE WITH MIL-STD-130.
5. COVER AND BASE TO BE PARALLEL WITHIN 1.5 MILLIMETERS TOTAL.

Form Approved
OMB No. 0704-0188

NOTES

1. DIMENSIONS ARE IN MILLIMETERS. UNLESS OTHERWISE SPECIFIED, TOLERANCES ARE ± 2.0 MM.
2. THE SPECIFICATION SHEET PART NUMBER CONSISTS OF THE SPECIFICATION SHEET NUMBER FOLLOWED BY A DASH NUMBER.
3. REFERENCED DOCUMENTS SHALL BE OF THE ISSUE IN EFFECT ON DATE OF INVITATIONS FOR BID.
4. THIS STANDARD IS NOT INTENDED TO LIMIT CONSTRUCTION TO FEATURES OTHER THAN SHOWN HEREIN BY DIMENSIONS, NOTATIONS, OR REFERENCED DOCUMENTS.
5. FOR DESIGN FEATURE PURPOSES, THIS STANDARD TAKES PRECEDENCE OVER PROCUREMENT DOCUMENTS REFERENCED HEREIN.
6. FOR BOOST CHARGING AND ACTIVATION ONLY - NOT FOR VEHICLE SYSTEM VOLTAGE OUTPUT.
7. CERTAIN PROVISIONS OF THIS SPECIFICATION ARE IDENTIFIED BY AN ASTERISK (*) ARE SUBJECT TO INTERNATIONAL STANDARDIZATION AGREEMENTS NATO STANAG 4015, AND ABC-ARMY-STD-140. WHEN AMENDMENT, REVISION, OR CANCELLATION OF THIS SPECIFICATION IS PROPOSED THAT WILL MODIFY THE INITERNATIONAL AGREEMENTS CONCERNED, THE PREPARING ACTIVITY WILL TAKE APPROPRIATE ACTION THROUGH INTERNATIONAL STANDARDIZATION CHANNELS, INCLUDING DEPARTMENTAL STANDARDIZATION OFFICES, TO CHANGE THE AGREEMENT OR MAKE OTHER APPROPRIATE ACCOMODATIONS.
8. MARKS ARE NOT USED IN THIS REVISION TO IDENTIFY CHANGES WITH RESPECT TO THE PREVIOUS ISSUE DUE TO THE EXTENSIVENESS OF THE CHANGES.

Title	MS Part no.
Charged and dry	MS52149-1
Charged and wet	MS52149-2
Vent cap	MS52149-3

This specification is approved for use by the Army, and is Tank-Automotive Command, Department of the Army, and is available for use by all Departments and Agencies of the Department of Defense.

shall consist of this specification sheet and the issue of the DoDISS following specification listed in that issue MIL-B-62346 specified in the solicitation: