A-42-53

FED. SUP CLASS
6620

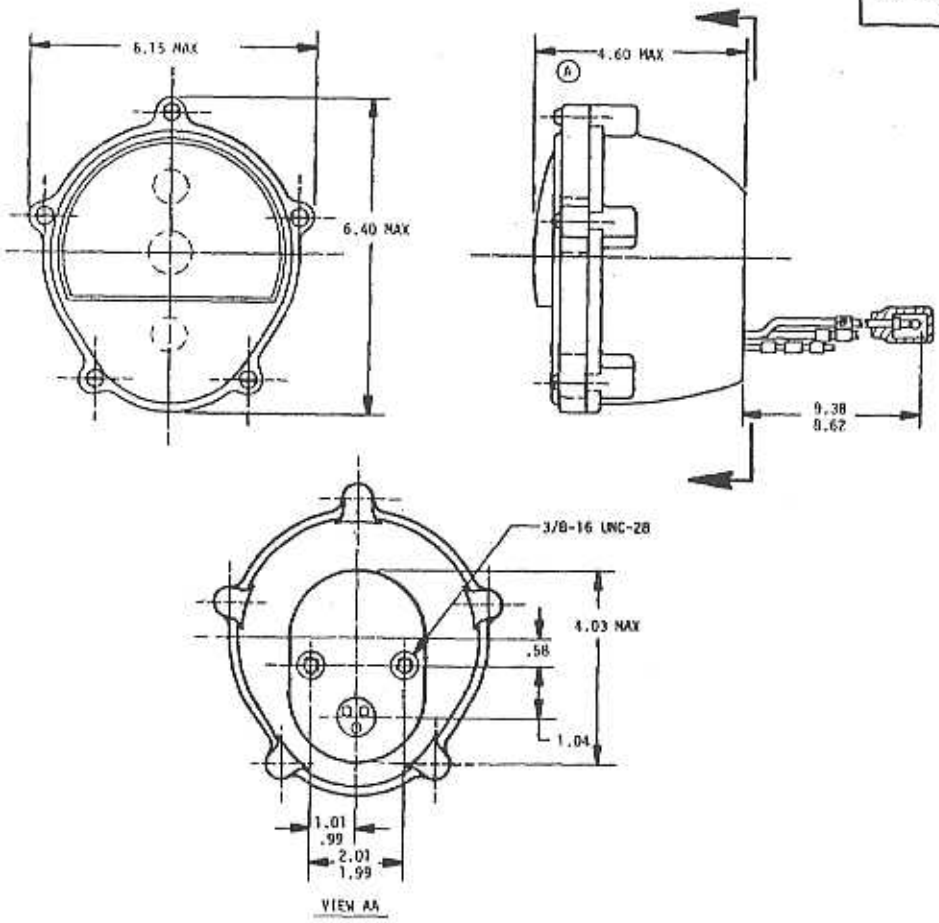

MS PART NUMBER	VOLTS	REF DWG NO.
MS52126-1	12	11614156
MS52126-2	24	11614156

NOTES:

1. ALL THREADS SHALL BE IN ACCORDANCE WITH SCREW THREAD STANDARDS FOR FEDERAL SERVICES, H-28.
2. DIMENSIONS SHOWN ARE IN INCHES AND ARE FOR ENGINEERING REFERENCE ONLY.
3. REFERENCED GOVERNMENT DOCUMENTS OF THE ISSUE LISTED IN THAT ISSUE OF THE DEPARTMENT OF DEFENSE INDEX OF SPECIFICATIONS AND STANDARDS (DODISS) SPECIFIED IN THE SOLICITATION FORM A PART OF THIS STANDARD TO THE EXTENT SPECIFIED HEREIN.
4. DETAILS OF THIS ASSEMBLY SHALL BE IN ACCORDANCE WITH REFERENCED DRAWING, WHICH MAY BE OBTAINED FROM THE US ARMY TANK-AUTOMOTIVE COMMAND, WARREN, MICHIGAN 48397-5000.

(A) DENOTES CHANGE

APPROVED 3 OCT 1972 REVISED (A) 27 AUG 1987

P. A. ARMY-AT Other Cust	INTERNATIONAL INTEREST	TITLE COMPOSITE LIGHT-FRONT TURN, PARK AND MARKER	MILITARY STANDARD MS 52126 (AT)
PROCUREMENT SPECIFICATION NONE	SUPERSEDES:		SHEET 1 OF 1

DD FORM 672-1 LIMITED COORDINATION

6220-A360

ARMY-ME
DISTRIBUTION STATEMENT A. Approved for public release; distribution is unlimited.