Form Approved
OMB No. 0704-0188

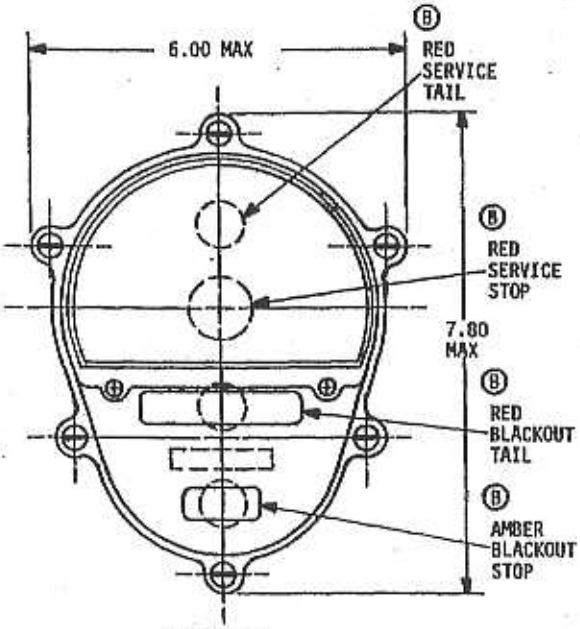

FRONT VIEW

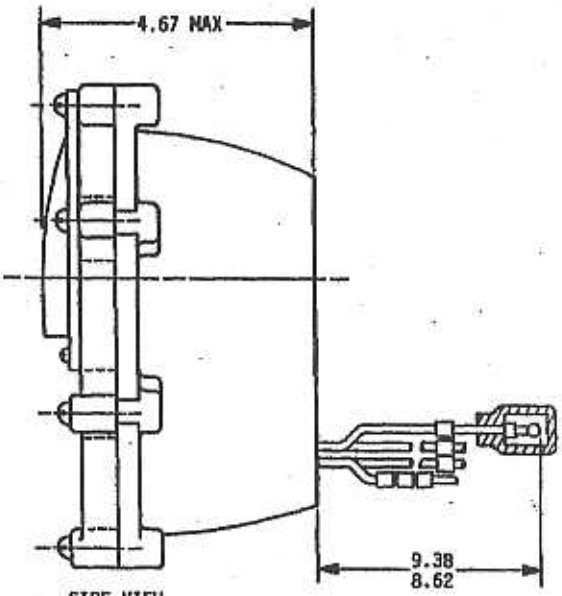

SIDE VIEW

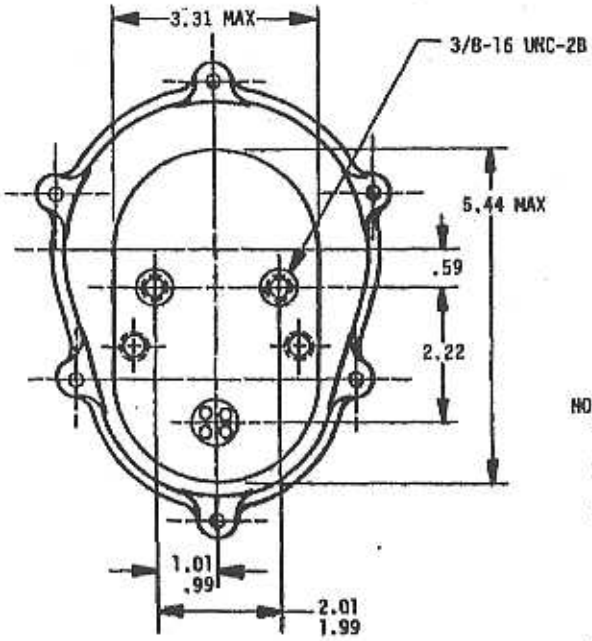

REAR VIEW

NOTES:

1. ALL THREADS SHALL BE IN ACCORDANCE WITH SCREW THREAD STANDARDS FOR FEDERAL SERVICES, H-28.
2. DIMENSIONS SHOWN ARE IN INCHES AND ARE FOR ENGINEERING REFERENCE ONLY.
3. REFERENCED GOVERNMENT DOCUMENTS OF THE ISSUE LISTED IN THAT ISSUE OF THE DEPARTMENT OF DEFENSE INDEX OF SPECIFICATIONS AND STANDARDS (DODISS) SPECIFIED IN THE SOLICITATION FORM A PART OF THIS STANDARD TO THE EXTENT SPECIFIED HEREIN.
4. MATERIAL: ALUMINUM ALLOY DIE CASTING A360 SPEC QQ-A-591.
5. DETAILS OF THIS ASSEMBLY SHALL BE IN ACCORDANCE WITH REFERENCED DRAWING, WHICH MAY BE OBTAINED FROM THE US ARMY TANK-AUTOMOTIVE COMMAND, WARREN, MI 48397-5000.

MS PART NUMBER	VOLTS	REF DWG NO.
MS52125-1	12	11614157
MS52125-2	24	11614157

(B) DENOTES CHANGES

INCH-POUND

PREPARING ACTIVITY: ARMY-AT

CUSTODIANS: ARMY- AT NAVY- AIR FORCE-

REVIEW: DLA-GS

USER: ARMY-ME; NAVY-YD

PROJECT NUMBER: 6220-A362

MILITARY SPECIFICATION SHEET

TITLE:

COMPOSITE LIGHT, TAIL STOP, TURN AND MARKER

SPECIFICATION SHEET NUMBER:
MS52125B
24 JULY 1989

SUPERSEDING:
MS52125A, 27 AUGUST 1987

AMSC-N/A FSC- 6220

DISTRIBUTION STATEMENT A. Approved for public release; distribution is unlimited.