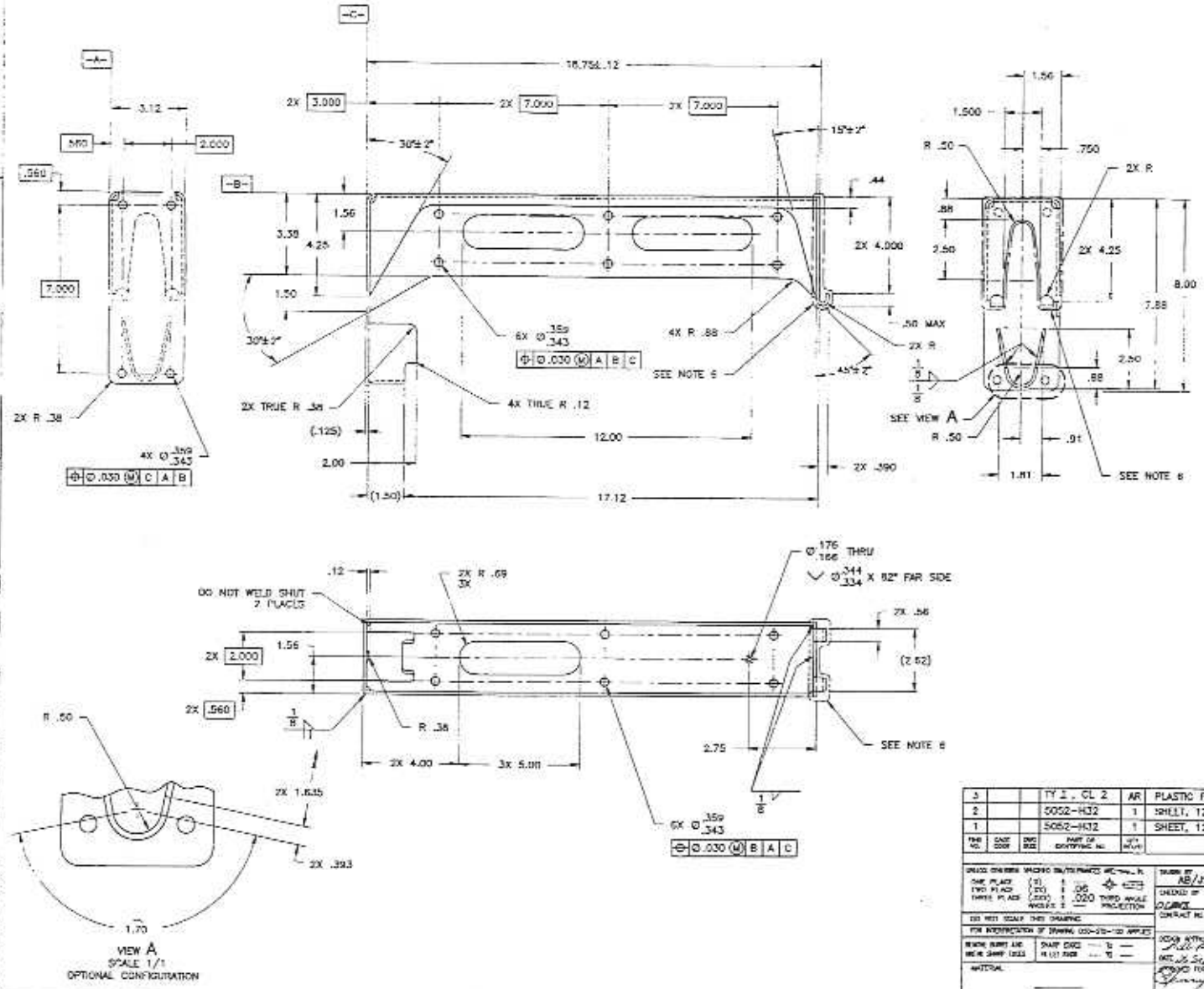

NOTES:

1. UNLESS OTHERWISE SPECIFIED, BEND RADII .12 MAXIMUM.
2. BEND RELIEFS AS REQUIRED.
3. WELDING SHALL BE IN ACCORDANCE WITH 13214E8326, CLASS 2, TYPE III.
4. MARK WITH "97403-ASSY 13229E8014" IN ACCORDANCE WITH MIL-STD-130, METHOD OPTIONAL.
5. TREAT AND PAINT IN ACCORDANCE WITH MIL-T-704, TYPE G.
6. AREAS MARKED SHALL BE COATED WITH PLASTIC PLASTISOL, FIND NO. 3, TO .03-.05 THICKNESS.
7. MULTIPLE-PIECE CONSTRUCTION PERMISSIBLE WITH FULL PENETRATION WELDS AT ALL JOINTS, BUT THE STRENGTH SHALL BE EQUAL TO OR GREATER THAN THE DESIGN SHOWN.

CONVERSION TABLE

INCH	mm	INCH	mm	INCH	mm
.020	0.51	.69	17.5	3.000	76.2
.030	0.76	.750	19.05	3.12	79.2
.06	1.5	.88	22.4	3.38	85.9
.12	3	.91	23.1	4.00	101.6
.125	3.18	1.50	38.1	4.25	108
.343	8.71	1.500	38.1	5.00	127
.359	9.12	1.56	39.6	7.000	177.8
.38	9.6	1.62	41.1	7.88	200.2
.390	9.91	1.81	46	8.00	203.2
.44	11.2	2.00	50.8	17.12	434.8
.50	12.7	2.50	63.5	18.75	476.2
.56	14.2	2.62	66.5		
.560	14.22	2.75	69.9		

FIND NO.	CAGE CODE	DWG SIZE	PART OR IDENTIFYING NO.	QTY REQ'D	NOMENCLATURE OR DESCRIPTION	SPECIFICATION	MATERIAL
3			TY 2, CL 2	AR	PLASTIC PLASTISOL, COLOR GREEN 383	MIL-P-20689	PVC
2			5052-H32	1	SHEET, 125 THK	ASTM B209	AL ALY
1			5052-H32	1	SHEET, 125 THK	ASTM B209	AL ALY

PARTS LIST

UNLESS OTHERWISE SPECIFIED DIMENSIONS ARE IN INCHES
ONE PLACE (X) ± .06
TWO PLACE (XX) ± .020
THREE PLACE (XXX) ± .020
ANGLES ± 2°
THIRD ANGLE PROJECTION
DO NOT SCALE THIS DRAWING
FOR INTERPRETATION OF DRAWING 000-310-100 APPLIES
REMOVE BURRS AND BREAK SHARP EDGES
SHARP EDGES — TO —
FILLET RADII — TO —
MATERIAL

DRAWN BY AB/JSF
DATE 3 AUG 90
CHECKED BY
CONTRACT NO.
DESIGN APPROVAL
DATE
APPROVED FOR PROCUREMENT
DATE

U.S. ARMY
DELVOIR RESEARCH, DEVELOPMENT, AND ENGINEERING CENTER
FORT BELVOIR, VIRGINIA 22060-5606

BRACKET,
RIFLE STOWAGE

SIZE A1 | CAGE CODE 97403 | DWG NO. 13229E8016
SCALE 1/2 | SHEET 1 OF 1

KMT 10 AUG 90 11:45 AM