REVISIONS				
ZONE	LTR	DESCRIPTION	DATE	APPROVED
	A	REDRAWN WITH CHANGE. SEE ECP NO. 92HE3013	[illegible]	[illegible]

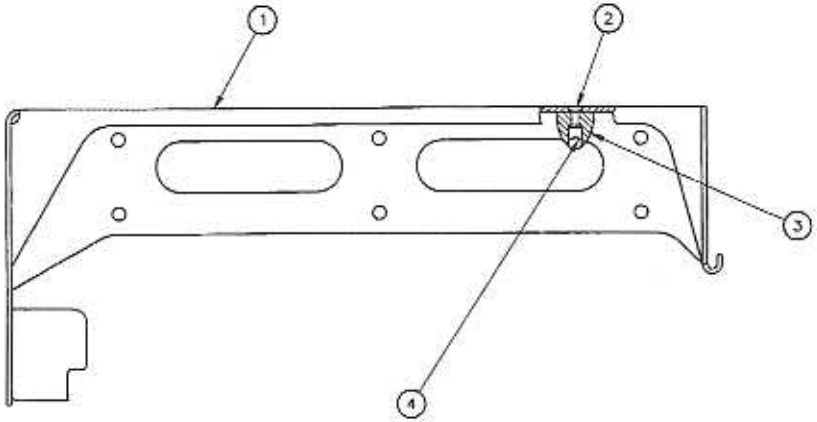

NOTES:

1. INSERT, FIND NO. 4, MAY BE PROCURED FROM:
   PRECISION FASTENERS, INC
   5 LAUREL DRIVE
   UNIT NO. 16
   FLANDERS, NEW JERSEY 07836

FIND NO.	CAGE CODE	DWG SIZE	PART OR IDENTIFYING NO.	QTY REQD	NOMENCLATURE OR DESCRIPTION	SPECIFICATION	MATERIAL
4	D0716		3020608.13	1	INSERT, SLOTTED, NO. 8-32 UNC (KERB KONUS)		STEEL
3	76348		2097-W/305	1	BUMPER, RECESSED, 50±5 DUROMETER		NEOPRENE
					(MILLER PRODUCTS)		
2	26233		P32AS832R3/	1	SCREW, MACH, 82° FLAT HD,		STEEL
			4Z		NO. 8-32 UNC X .75 L (NYLOK)		
1			13229E8016	1	RIFLE STOWAGE BRACKET		

PARTS LIST

UNLESS OTHERWISE SPECIFIED DIM/TOLERANCES ARE: mm/IN.
ONE PLACE (.X) ± —
TWO PLACE (.XX) ± —
THREE PLACE (.XXX) ± —
ANGLES ± —
THIRD ANGLE PROJECTION

DO NOT SCALE THIS DRAWING

FOR INTERPRETATION OF DRAWING DOD-STD-100 APPLIES

REMOVE BURRS AND BREAK SHARP EDGES — SHARP EDGES — TO —
FILLET RADII — TO —

MATERIAL

DRAWN BY AB/BO — DATE 6AUG90
CHECKED BY BROWN/LAMA — 24AUG90
CONTRACT NO. DAAK70-89-D-0068 — 2R341
DESIGN APPROVAL SFC WILLIE PETERS JR — DATE 26 SEP 90
APPROVED FOR PROCUREMENT HENRY SHAEFER — DATE 26 SEP 90

U.S. ARMY
BELVOIR RESEARCH, DEVELOPMENT, AND ENGINEERING CENTER
FORT BELVOIR, VIRGINIA 22060-5606

BRACKET ASSEMBLY, RIFLE STOWAGE

SIZE A2 — CAGE CODE 97403 — DWG NO. 13229E8014
SCALE 1/2 — SHEET 1 OF 1

DISTRIBUTION STATEMENT A.
APPROVED FOR PUBLIC RELEASE;
DISTRIBUTION IS UNLIMITED.