TECHNICAL MANUAL

OPERATOR'S MANUAL

MODULAR CAUSEWAY FERRY (MCF)
NSN 1945-01-398-3856

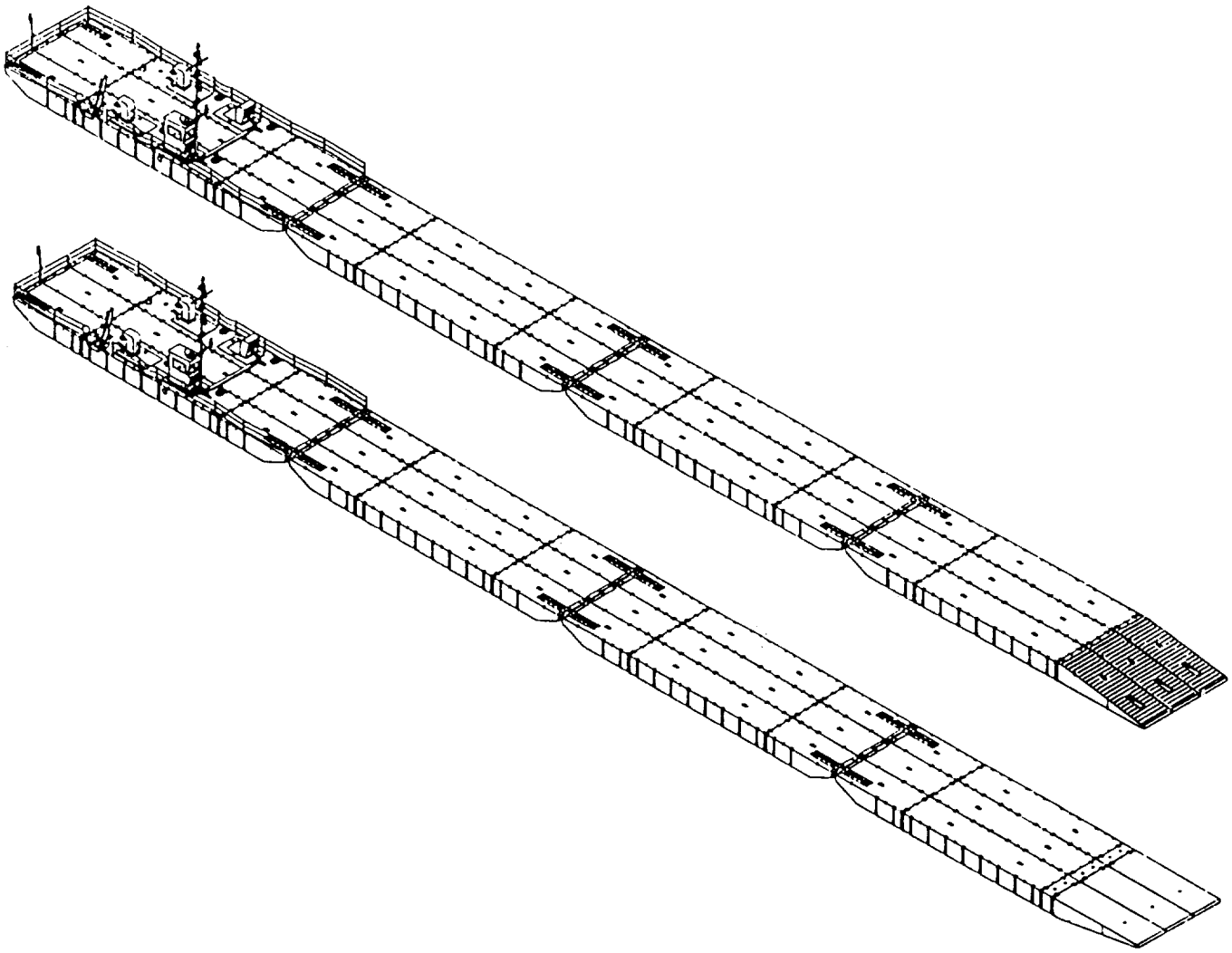

DISTRIBUTION STATEMENT A: Approved for public release; distribution is unlimited.

HEADQUARTERS, DEPARTMENT OF THE ARMY
29 AUGUST 1997

WARNING SUMMARY

SERIOUS INJURY OR DEATH

May result if personnel fail to observe the following safety precautions:

It is critical for SAFETY purposes to keep the engine hatch covers closed when engines are running, except when engine maintenance is being performed.

Engine hatch covers must be closed to allow fire suppression system to extinguish fire.

Batteries give off explosive hydrogen gas. Do not smoke around batteries. When performing maintenance of batteries, wear appropriate personal protective equipment, including safety glasses, face shield, apron, gloves and safety shoes.

Do not operate engines in an enclosed area without adequate ventilation as carbon monoxide, an invisible poisonous gas, is generated. Symptoms of exposure to carbon monoxide are headache, dizziness, drowsiness, loss of muscular control and coma. Severe exposure can cause permanent brain damage.

Wear life preservers (work vest) at all times when aboard the Modular Causeway Ferry (MCF).

Diesel fuel is flammable. Do not allow smoking or any open flames near the MCF when you're refueling. Wipe up spilled fuel.

Engines must be shut down during fueling operations. Fire or explosion may result.

Do not turn panel lights on during blackout condition as a lit panel could make you an easy target.

For Artificial Respiration, refer to FM 21-1 1.

When below deck, ear protection (ear plugs) must be worn at all times to prevent hearing damage.

Hardhats and safety shoes must be worn by all personnel.

Extra precautions must be observed during rough weather conditions or night operations.

Prior to going below deck for maintenance, ventilate the compartment being entered.

Upon tripping the fire suppression system, a siren will sound for 30 seconds, then the powered module will fill with CO^2. Personnel must evacuate the machinery spaces within the 30 second warning period. Exposure to a CO^2 atmosphere will cause death to personnel.

Ensure polarity is correct when reassembling or connecting D.C. batteries.

Warnings and cautions appear in the text of this manual. Each is defined as follows:

WARNING

An operating or maintenance procedure, practice, condition, statement, etc., which, if not strictly observed, could result in injury or death to personnel.

CAUTION

An operating or maintenance procedure, practice, condition, statement, etc., which, if not strictly observed, could result in damage to or destruction of equipment or loss of mission effectiveness, or long-term health hazards to personnel.

TECHNICAL MANUAL

NO. 55-1945-205-10

HEADQUARTERS
DEPARTMENT OF THE ARMY
WASHINGTON, D.C., 29 August 1997

Operator's Manual

MODULAR CAUSEWAY FERRY (MCF)
NSN 1945-01-398-3856

REPORTING ERRORS AND RECOMMENDING IMPROVEMENTS

You can help improve this manual. If you find any mistakes, or if you know of a way to improve these procedures, please let us know. Mail your letter or DA Form 2028 (Recommended Changes to Publications and Blank Forms), or DA Form 2028-2 located in the back of this manual directly to: Commander, US Army Tank-Automotive and Armaments Command, ATTN: AMSTA-AC-NML, Rock Island, IL 61299-7630. A reply will be furnished directly to you.

DISTRIBUTION STATEMENT A: Approved for public release; distribution is unlimited

TABLE OF CONTENTS

		PAGE
CHAPTER 1	INTRODUCTION	1-1
Section I	General Information	1-3
Section II	Equipment Description	1-5
Section III	Principles of Operation	1-35
CHAPTER 2	OPERATING INSTRUCTIONS	2-1
Section I	Description and Use of Operator's Controls and Indicators	2-3
Section II	Preventive Maintenance Checks and Services (PMCS)	2-52
Section III	Operation Under Usual Conditions	2-110
Section IV	Operation Under Unusual Conditions	2-184
Section V	MCF Functional Checks	2-190
CHAPTER 3	MAINTENANCE INSTRUCTIONS	3-1
Section I	Lubrication/Maintenance Instructions	3-2
Section II	Troubleshooting Procedures	3-7
Section III	Operator's Maintenance Procedures	3-37
Section IV	Packaging and Lifting	3-38
APPENDIX A	REFERENCES	A-1
APPENDIX B	COMPONENTS OF END ITEM (COEI) AND BASIC ISSUE ITEMS (BII) LISTS	B-1
APPENDIX C	ADDITIONAL AUTHORIZATION LIST (ML)	C-1
APPENDIX D	EXPENDABLE/DURABLE SUPPLIES AND MATERIALS LIST	D-1
APPENDIX E	TORQUE TABLES	E-1
APPENDIX F	LUBRICATION ORDER (LO 55-1945-205-12)	F-1
	INDEX	INDEX-1

LIST OF FIGURES

Figure	Description	
1-1	MCF - Full Arrangement	1-7
1-2	Powered Section	1-8
1-3	Propulsion Module Major Internal Components	1-12
1-4	Center Module (Non-powered)	1-13
1-5	End Rakes Modules Left Hand and Right Hand	1-14
1-6	End Rake Module, Center	1-15
1-7	Male/Female Connector Assembly	1-16
1-8	Flexor Connector	1-17
1-9	Operator's Cab	1-19
1-10	Intake Plenum	1-20
1-11	Exhaust Plenum	1-21
1-12	Main Navigational Mast	1-22
1-13	Stub Mast	1-23
1-14	Interconnection Cables	1-24
1-15	Anchorboard Assembly	1-25
1-16	Intermediate Section	1-26
1-17	Combination Beach/Sea End Section	1-27
1-18	Combination Beach/Sea End Section Alternate Configuration	1-28
1-19	Beach/Sea End Module	1-29
1-20	P-3 Adapter Assembly	1-30
1-21	Deck Fittings	1-31
1-22	Drive Train	1-36
1-23	Cooling System Schematic Diagram	1-38
1-24	Fuel System Schematic Diagram	1-40
1-25	Ventilation System Functional Diagram	1-42
1-26	MCF Electrical Block Diagram	1-44
1-27	Electrical One-Line Diagram	1-48
1-28	Hydraulic System Schematic	1-51
1-29	Fire Suppression System Schematic	1-52
2-1	Operator's Cab and Above Deck Controls and Indicators	2-4
2-2	Middle Control Panel (A1)Controls and Indicators	2-7
2-3	Lower Control Panel (A2)Controls and Indicators	2-11
2-4	Operator's Cab Circuit Breaker Panel (A3)	2-14
2-5	Mast Enclosure Assembly	2-16
2-6	Accessory Controls and Indicators	2-18
2-7	Below Deck Controls and Indicators	2-21
2-8	(Diesel) Engine Mounted Controls	2-22
2-9	Propulsion Module Circuit Breaker Panel	2-24
2-10	Engine Junction Box Assembly (A4)	2-25
2-11	Bilge Pump Control Assembly (A5)	2-27
2-12	Single Bilge Pump Control Assembly (A7)	2-28
2-13	Hydraulic Steering System Indicators	2-29
2-14	Fuel System Controls	2-30
2-15	Raw Water System Controls	2-32
2-16	Emergency Controls and Indicators	2-33
2-17	Anchorboard Assembly Emergency Anchor	2-36
2-18	Fire Detection Controls and Indicators	2-38
2-19	Fire Suppression System Controls and Indicators	2-41

LIST OF FIGURES (cont'd)

Figure	Description	
2-20	Diesel Engine Emergency Stop Locations	2-46
2-21	Bilge Pump System Controls and Indicators	2-48
2-22	Emergency Steering and Shifting Controls and Indicators	2-50
2-23	MCF PMCS Routing Diagram	2-54
2-24	MCF ISOPACK	2-114
2-25	Disassembling an MCF ISOPACK	2-116
2-26	Lifting MCF End Rakes	2-117
2-27	Lifting MCF Center Module (Non-powered)	2-118
2-28	MCF Connectors in Pairs	2-119
2-29	Male Connector Assembly (Pin in Stowed Position)	2-120
2-30	Female Connector Assembly	2-121
2-31	P-3 Adapter Assembly Connector	2-123
2-32	Female Lock Assembly Pry Bar Operation and Rotation	2-124
2-33	Raising Guillotine Bar Upward	2-125
2-34	Guillotine Bar in the fully elevated position	2-126
2-35	Male Connector Pins in the extended position	2-127
2-36	Deck Fittings, Fender and Rhino Horn Installation	2-129
2-37	Pulling MCF Strings	2-132
2-38	MCF String Engagement	2-133
2-39	Interconnection Steps	2-134
2-40	Flexor Connector Installation	2-136
2-41	Assembled Intermediate Section	2-137
2-42	Assembled Beach/Sea End Section	2-138
2-43	Assembled Alternate Beach/Sea End Section with P-3 Adapter	2-139
2-44	Lifting the MCF Section	2-140
2-45	Stowing Male Connector Pins	2-142
2-46	MCF-NL Compatibility	2-143
2-47	Propulsion Module/Powered Section Assembly	2-149
2-48	Propulsion Module/Powered Section Electrical Connection Diagram	2-160
2-49	Assembled Powered Section	2-162
2-50	Priming Diesel Engine Raw Water Pump	2-164
2-51	Fire Suppression System Installation	2-167
2-52	Fuel System Priming Pump	2-168
2-53	Decals and Instructions Locations	2-172
2-54	Operator MCF Maneuver Controls, Indicators and Signals	2-176
2-55	Building a MCF with Modules, Strings and Sections	2-181
2-56	Emergency Steering Installation and Procedures	2-188
3-1	Removing Connector Pins	3-3
3-2	Friction Plate Adjustment	3-4
3-3	Removing Deck Fittings	3-6
3-4	MCF ISOPACK	3-38
3-5	Building MCF ISOPACK	3-40
3-6	MCF Interim Stacking	3-41
3-7	Lifting MCF End Rakes	3-42
3-8	Lifting MCF Center Module	3-43
3-9	Lifting the MCF Section	3-44
3-10	RTCH Lifting an ISOPACK	3-45

LIST OF TABLES

Table	Description	
1-1	MCF System	1-32
1-2	MCF Powered Section	1-33
1-3	MCF Intermediate Section	1-34
1-4	MCF Beach/Sea Section	1-34
1-5	P-3 Adapter Assembly	1-34
2-1	Middle Control Panel Controls and Indicators	2-6
2-2	Lower Control Panel Controls and Indicators	2-9
2-3	Operator' Cab Circuit Breaker Panel	2-13
2-4	Mast Enclosure Assembly	2-15
2-5	Miscellaneous Above Deck Controls and Indicators	2-17
2-6	Diesel Engine Controls and Indicators	2-22
2-7	Propulsion Module Circuit Breaker Panel	2-23
2-8	Engine Junction Box Assembly (A4)	2-25
2-9	Machinery Compartment Bilge Pump Control Panel	2-26
2-10	Single Bilge Pump Control	2-28
2-11	Hydraulic System Controls and Indicators	2-29
2-12	Fuel System Controls and Indicators	2-30
2-13	Raw Water System Controls and Indicators	2-31
2-14	Anchorboard Assembly Controls and Indicators	2-35
2-15	Fire Detection System Controls and Indicators	2-37
2-16	Fire Suppression System Controls and Indicators	2-40
2-17	Diesel Engine Emergency Stop Controls	2-45
2-18	Bilge Pump System Controls and Indicators	2-47
2-19	Emergency Steering and Shifting Controls and Indicators	2-49
2-20	Operator/Crew Preventive Maintenance Checks and Services (PMCS) .	2-55
2-21	Container Breakdown by Section Assembly	2-110
2-22	Module Nominal Weights	2-113
2-23	Modular Causeway Ferry Operator Checklist	2-169
2-24	Decals and Instruction Plate Locations	2-171
3-1	Troubleshooting	3-8
3-2	Module Nominal Weights	3-46

CHAPTER 1

INTRODUCTION

Section I	General Information	1-3
1-1	Scope	1-3
1-2	Maintenance Forms and Procedures	1-3
1-3	Corrosion Prevention and Control (CPC)	1-3
1-4	Destruction of Army Material to Prevent Enemy Use	1-3
1-5	Reporting Equipment Improvement Recommendations (EIRs)	1-3
1-6	Warranty Information	1-3
1-7	Official Nomenclature and Names(s)	1-4
Section II	Equipment Description	1-5
1-8	Equipment Characteristics, Capabilities and Features	1-5
1-9	Location and Description of Major Components	1-5
1-10	Powered Section	1-6
1-10.1	Propulsion Module	1-6
1-10.2	Center Module	1-13
1-10.3	End Rake Modules	1-14
1-10.4	Connector Assemblies	1-16
1-10.5	Operator's Cab	1-18
1-10.6	Ventilation	1-20
1-10.7	Communication and Electronic Equipment	1-22
1-10.8	Navigation Lights	1-22
1-10.9	Module Electrical Interconnection Cables	1-24
1-10.10	Anchorboard	1-25
1-11	Intermediate Section	1-26
1-11.1	Center Module	1-26
1-11.2	End Rake Module	1-26
1-11.3	Connectors	1-26
1-12	Combination Beach/Sea End Section	1-27
1-12.1	Center Module	1-27
1-12.2	End Rake Module	1-27
1-12.3	Beach/Sea End Module	1-27
1-12.4	P-3 Adaptor Assembly	1-27
1-12.5	Deck Fittings	1-31
1-13	Equipment Data	1-32
Section III	Principles of Operation	1-35
1-14	MCF	1-35
1-14.1	Drive Train	1-35
1-14.2	Cooling and Exhaust	1-37
1-14.3	Fuel System	1-39
1-14.4	Ventilation System	1-41
1-15	MCF Electrical System	1-43
1-15.1	Ventilation	1-43
1-15.2	Bilge Flood Warning and Control System	1-43
1-15.3	Communications	1-43
1-15.4	Navigation System	1-43
1-15.5	Engine Operation (Port and Starboard)	1-45
1-15.6	Engine Alternator	1-45
1-15.7	Electronic Speed Switch	1-45
1-15.8	Engine Governor	1-45
1-15.9	Operator Engine Control Alarms and Indicator System	1-45

Section III Principles of Operation - Continued

1-15.10	Lighting System	1-46
1-15.11	Steering (Port and Starboard) Systems	1-46
1-15.12	Cab Auxiliary Systems	1-47
1-15.13	Electrical Interconnect System	1-47
1-16	Hydraulic System	1-50
1-16.1	Powered (Normal) Operation	1-50
1-16.2	Emergency (Manual) Operation	1-50
1-16.3	Hydraulic Reservoir	1-50
1-16.4	Hydraulic Pump	1-50
1-16.5	Way Valve Assembly	1-50
1-16.6	Dual Braking Valve	1-50
1-16.7	Hydraulic Motor	1-50
1-16.8	Three Way Valve	1-50
1-16.9	Two Way Valve	1-50
1-16.10	Manual Hydraulic Hand Pump	1-50
1-17	Fire Suppression System	1-52

Section I. General Information

1-1 SCOPE

a. Type of manual: Operator's Manual.

b. Purpose of Equipment: The purpose of the MCF is for Logistics-over-the-Shore (LOTS) for the deployment and handling of supplies between ship and beach. Modular causeway sections are connected together to form a floating, powered causeway.

c. This chapter provides the operator with information to complete forms and records as well as familiarization with the MCF and its equipment. Functional and physical descriptions of the major equipment, components, and applicable interface equipment are provided.

1-2 MAINTENANCE FORMS AND PROCEDURES. Department of the Army forms and procedures used for equipment maintenance will be those prescribed by DA PAM 738-750 as contained in the Maintenance Management Update.

1-3 CORROSION PREVENTION AND CONTROL (CPC).

a. The operator is to always look for recurring instances of corrosion. It is important that any corrosion problems with the MCF be noted on DA Form 2404 as a continual deficiency. It is important for the operator and crew to be diligent in CPC so that improvements can be made to prevent the problem in future in like pieces of equipment or components.

b. While the operator and crew understand that corrosion is typically associated with rusting of metals, it can also include deterioration of other materials, such as rubber and plastic hoses and fittings below deck, or controls and indicators in the operators cab. Unusual cracking, softening, swelling or breaking of these materials may be a corrosion problem.

c. If a corrosion problem is identified, it can be reported using Standard Form 368, Product Quality Deficiency Report, in addition to the DA Form 2404. Use of keywords such as "corrosion." "rust" "deterioration" or "cracking" will ensure that the information is identified as a CPC problem.

d. The form should be submitted through the maintenance chain to the address specified in DA PAM 738-750.

1-4 DESTRUCTION OF ARMY MATERIAL TO PREVENT ENEMY USE. Procedures for "destruction of Army material to prevent enemy use" are contained in TM 750-244-6.

1-5 REPORTING EQUIPMENT IMPROVEMENT RECOMMENDATIONS (EIRs). If your MCF system needs improvement, let us know. Send us an EIR. You the user, are the only one who can tell what you don't like about your equipment, design or performance. Put it on a SF 368 (Product Quality Deficiency Report) Mail it to us at: Commander, U.S. Army ATCOM, AMSAT-I-WTT, 4300 Goodfellow Blvd., St. Louis, MO, 63120-1798.

1-6 WARRANTY INFORMATION. The MCF is warranted to be free of material and workmanship defects within the scope of the purchase specifications for a period of eight months after government acceptance. Report all defects in material and workmanship to your supervisor, who will take appropriate action.

The manufacturer does not warrant conditions resulting from damage and/or neglect from use outside the scope of normal operating and maintenance procedures as set forth in the applicable manuals.

1-7 OFFICIAL NOMENCLATURE AND NAME(S)

a. Nomenclature Cross Reference List

COMMON NAME	OFFICIAL NOMENCLATURE
Pump-Jet	Water Jet Propulsion System
Intermediate Module	MCF P40, 40 Foot Non-Powered Pontoon Assembly
End Rake Module(s)	MCF P20RR, 20 Foot Right Raked Pontoon Assembly
	MCF P20CR, 20 Foot Center Raked Pontoon Assembly
	MCF P20LR, 20 Foot Left Raked Pontoon Assembly
Beach/Sea End Module	25 Foot Beach End Module Assembly
Powered Module	Propulsion Module Assembly
Adaptor Module	P3 Adaptor Assembly
Drive Train	Engine, Marine Gear, Drive Shaft and Transfer Case

b. Abbreviations.

BII	Basic Issue Items
CAGE	Commercial and Government Entity
CFM	Cubic Feet per Minute
CN	Can
CPC	Corrosion Prevention Control
CTN	Carton
DA	Department of the Army
DSC	Digital Selective Calling
EA	Each
EIR	Equipment Improvement Recommendations
F	Fahrenheit
GAL	Gallon
GPH	gallons per hour
HP	Horse power
HPU	Hydraulic Power Unit
IAW	In Accordance With
ISO	International Standards Organization
LOTS	Logistics-over-the-Shore
MAC	Maintenance Allocation Chart
MCF	Modular Causeway Ferry
MCS	Module Causeway Sections
NSN	National Stock Number
PMCS	Preventive Maintenance Checks and Services
PSF	Pounds per square foot
PSI	Pounds per square inch
PT	Pint
QT	Quart
QTY	Quantity
RPSTL	Repair Parts and Special Tools List
RPM	revolutions per minute
RTCH	Rough Terrain Container Handler
SLWT	Side-Loadable Warping Tug
U/M	Unit of Measure

Section II. Equipment Description.

1-8 EQUIPMENT CHARACTERISTICS, CAPABILITIES AND FEATURES

a. The MCF system is a combination of modules assembled to form section assemblies. Individual modules connect together by means of the male/female vertical connectors located around the perimeter of each module. Section assemblies are then connected end-to-end to form the completed causeway ferry. The sections are secured to other sections by means of flexor connectors. The assembled MCF consists of four sections: one Powered Section, two (Non-Powered) Intermediate Sections, and one Combination Beach/Sea End Section. The Powered Section and the (Non-Powered) Intermediate Sections are 24 feet wide and 80 feet long, the (Non-Powered) Combination Beach/Sea End Section is 24 feet wide and 85 feet long. When all four sections are connected end-to-end, they form a single MCF which is 24 feet wide and 325 feet long. The powered section is assembled with two propulsion modules that facilitate self-powered movement and maneuvering. The powered section is fitted with an operators cab, intake and exhaust plenums, interconnection (cable) assembly, navigational lighting system, hand rails and emergency anchor with all above deck components located to allow drive through operation. The cab and navigational lighting can be installed on either the port or starboard side of the Powered Section.

b. The fully assembled MCF has a cargo capacity of 350 short tons; can maintain the speed of 6 knots at maximum load capacity in a sea state condition 2 and carries enough fuel to operate under those conditions for 10 hours. The fully loaded MCF will maintain a freeboard of approximately 12 inches, can execute a 180° turn within 2 minutes, a 360° turn in 4 minutes, and can be brought from full speed (6 knots) to a dead stop within 320 feet. The propulsion (diesel) engines are capable of being started in an ambient temperature of -25° F.

c. The MCF is used to transport containerized, rolling and breakbulk cargo from ocean going vessels in the stream to the beach. The unassembled components of the causeway ferry are transported in ISO pack configuration by sea T-ACS, Lighter Aboard Ship (LASH), Fast Sealift Ship (FSS) and/or commercial container ships to the operational area and assembled after arrival. (Components can also be transported by rail and motor vehicle over improved and unimproved roads.) Upon arrival in the operational area the MCF can be assembled on deck, on land, or in water of sea-state "0". The MCF is designed to augment the Modular Causeway System (MCS) in applications where powered assemblies are required. The system utilizes the Navy "flexor" and shear connector system for causeway end-to-end connection, and is interchangeable with existing Navy Lighter (NL) and Army MCS hardware at the sectional level. The MCF modules are interchangeable with existing Army MCS modules. The MCF modules are ISO container compatible and are also outfitted with ISO corner fittings.

d. The MCF, with maximum payload, is capable of beaching and retracting under its own power in those gradients commonly found in beach environments and operating in surf conditions up to 5 feet.

1-9 LOCATION AND DESCRIPTION OF MAJOR COMPONENTS. The MCF system (Figure 1-1) consists of one Powered Section, two Intermediate Sections and one Combination Beach/Sea End Section. The Powered Section can be broken down to the Propulsion Modules, the Center Module (non-powered), End Rake Modules, Connectors, the Operator's Cab, the Intake Plenum, Exhaust Plenums, Navigation Masts, the Module Electrical Interconnect, the Anchor Board and Hand Rails. The Intermediate Sections can be broken down to Center Modules (non-powered), End Rake Modules and Connectors. The Combination Beach/Sea end Section can be broken down into Center Modules (non-powered), End Rake Modules, Connectors and Beach End Modules. When operating in the optional configuration, with the Beach End Modules in the inverted position, P3 Adaptor Modules are included in the breakdown increasing the length of the completely assembled MCF approximately 329 feet.

1-10 POWERED SECTION. The Powered Section (Figure 1-2) is made up of two Propulsion Modules, one Center Module (non-powered), two Center Rake Modules and four End Rake Modules connected together by Male/Female Locking assemblies. The Propulsion Modules and the non-powered module are each 8 feet wide and 40 feet long. The end rake modules are each 8 feet wide and 20 feet long and are configured as Right Rake Assemblies, Center Rake Assemblies, and Left Rake Assemblies. All Center Modules (non-powered) are 4 feet 6 inches deep. They are fully ISO-compatible and are completely interchangeable. The Powered Section is the prime mover for the MCF and is propelled by two 8 cylinder, 600 HP, diesel marine engines driving two 360° steerable, 5,000 pound output, pump-jets. The cab with operator's controls is a self-contained unit designed to be removed for transport and can be mounted on either port or starboard propulsion module. Plug-in type electrical connectors are provided to tie electrical control into the cab location. A module electrical interconnect assembly is the electrical control link between the cab to the propulsion module opposite the cab. Navigation lighting is provided in the form of a 28-1/2 foot, main navigational mast mounted on the cab and a 8-1/2 foot stub mast that is installed at the extreme aft end of the powered section. Both masts are removable for shipment. Air intake and exhaust plenums are installed on the powered modules to provide air flow through the machinery spaces. One of the air intake plenums is integral to the cab. A hand held portable fire extinguisher mounts to either exhaust plenum. An anchorboard assembly with a 1500 pound anchor mounts to the starboard propulsion module, aft of the exhaust plenum. A removable personnel safety railing system is installed along both sides and across the aft end of the powered section. The powered section completely assembled weighs approximately 171,900 pounds.

1-10.1 Propulsion Module. The MCF Propulsion Module (Figure 1-3) has exactly the same external dimensions and ISO container corner fittings. The module is divided into three compartments separated by watertight bulkheads. The center (machinery)compartment is the largest and contains the drive train, engine cooling and exhaust components, hydraulic system and all electrical system components with the exception of one bilge pump, a single bilge pump control panel, and a pressure operated switch that are located in the lazaret. The drive train consists of an engine, Marine Gear, transfer case and pump-jet. Guarded drive shafts connect the Marine Gear to the transfer case and the transfer case to the pump-jet. The engine cooling and exhaust system consists of a sea chest (raw water inlet integral with the structure of the module), a butterfly valve, a duplex strainer, engine raw water pump, intercoolers, a fuel cooler, engine coolant heat exchanger, the Marine Gear oil cooler, the exhaust water shut-off valve, the transfer case oil cooler, the transfer case shut -off ball valve, the water cooled muffler and exhaust flappers. The hydraulic system ' consists of a hydraulic pump driven by the Marine Gear, a hydraulic motor drives the primary steering planetary gearbox mounted on the pump-jet, a hydraulic brake which is integral to the auxiliary steering planetary gearbox which is also mounted on the pump-jet, an electrically actuated way valve with auxiliary manual control, a manually operated 3/2 ball valve, a needle valve, a braking valve unit , a pressure filter and a hydraulic reservoir with return line filter. A manual hydraulic hand pump is also provided for manual release of the hydraulic brake in case of system malfunction. The powered module electrical system consists of an engine mounted alternator, 4 lead-acid storage batteries, the propulsion module circuit breaker panel "A6", a bilge pump control panel "A5", an engine junction box with Emergency Stop control "A4", an engine mounted Emergency Stop push button, a propulsion module junction box "A3", a Pump-Jet/Thruster junction box "A2JB2", a Pump-Jet/Thruster direction/aux battery junction box "A9", and a fire detection system consisting of two thermal detectors and a thermal switch electrically tied into the cab controls . If the temperature inside reaches 2250, fire alarm will sound in the cab. In the event of a fire, a manually activated fire suppression system will flood this compartment with CO_2. This compartment is also equipped with 5 electrically operated bilge pumps. The aft (fuel) compartment contains the fuel tank, fuel/water separator and fuel system shutoff valves. This compartment is also protected by the fire detection system. It is important to note that there are no electrical connections, controls or operating devices in this compartment. A bilge pump is not provided in this compartment. Fire detection is accomplished by means of a probe extending through the bulkhead that separates the fuel and machinery compartments with all electrical terminations made on the machinery compartment side. In the event of fire this compartment is flooded with CO_2 upon activation of the fire suppression system. The forward compartment (lazaret), contains the fire suppression system control and agent storage components and provides stowage for the emergency steering assembly when not in use. This compartment is equipped with a bilge pump and local bilge pump control, and is not protected by the fire detection or fire suppression system. Each propulsion module has six 3700 gph submersible bilge pumps; 5 in the machinery compartment and 1 in the lazaret. The pumps are locally controlled from control stations mounted in the machinery compartment and lazaret or remotely controlled from the operator's cab. The Pump-jet is driven by an 8 cylinder, diesel, marine engine delivering 600 hp at 2100 rpm on the output shaft. Weight of the propulsion module is approximately 41,100 pounds dry or 45,000 pounds fully fueled. Listed below are detail descriptions of the major components found inside each propulsion module.

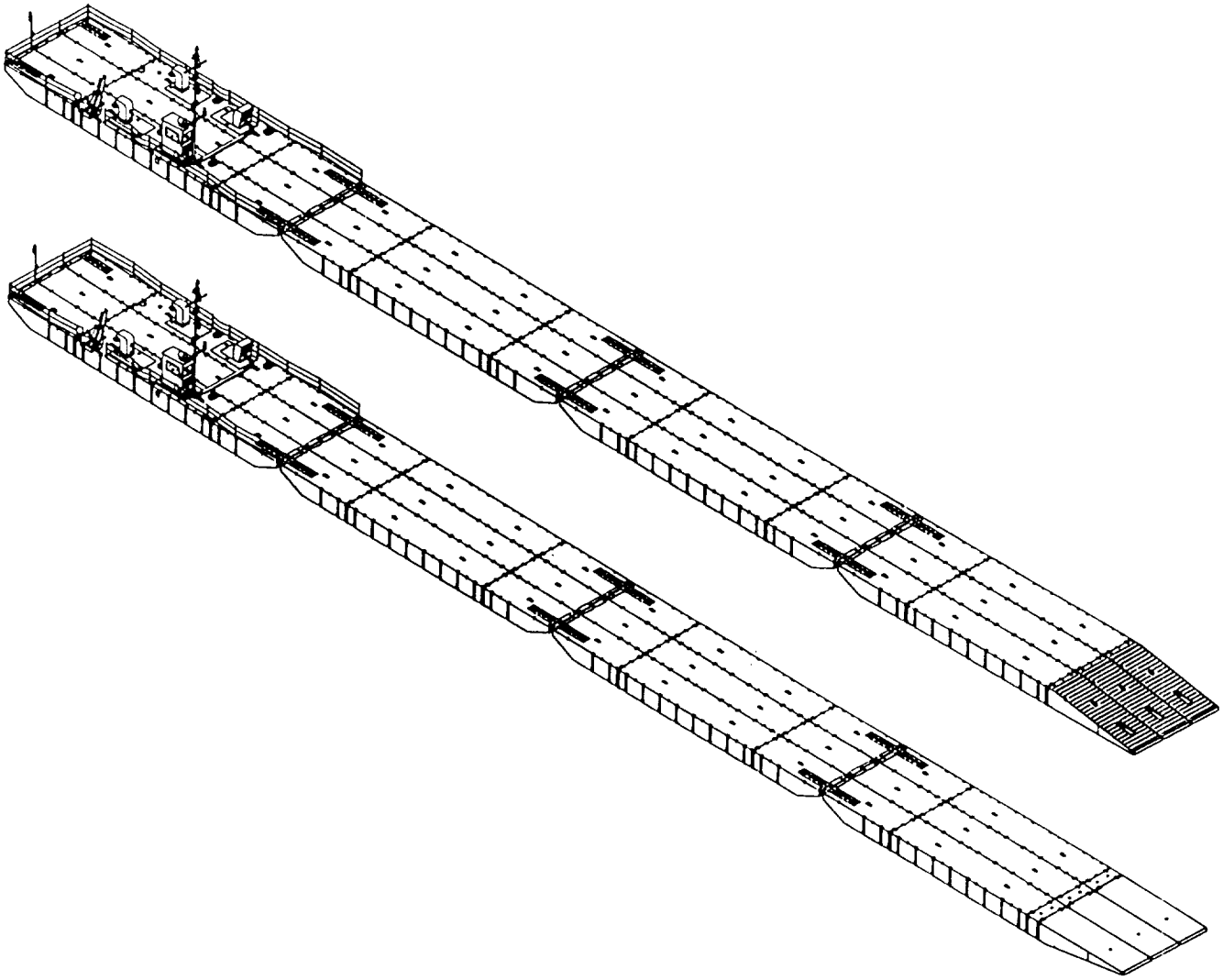

Figure 1-1. MCF (Full Arrangement).

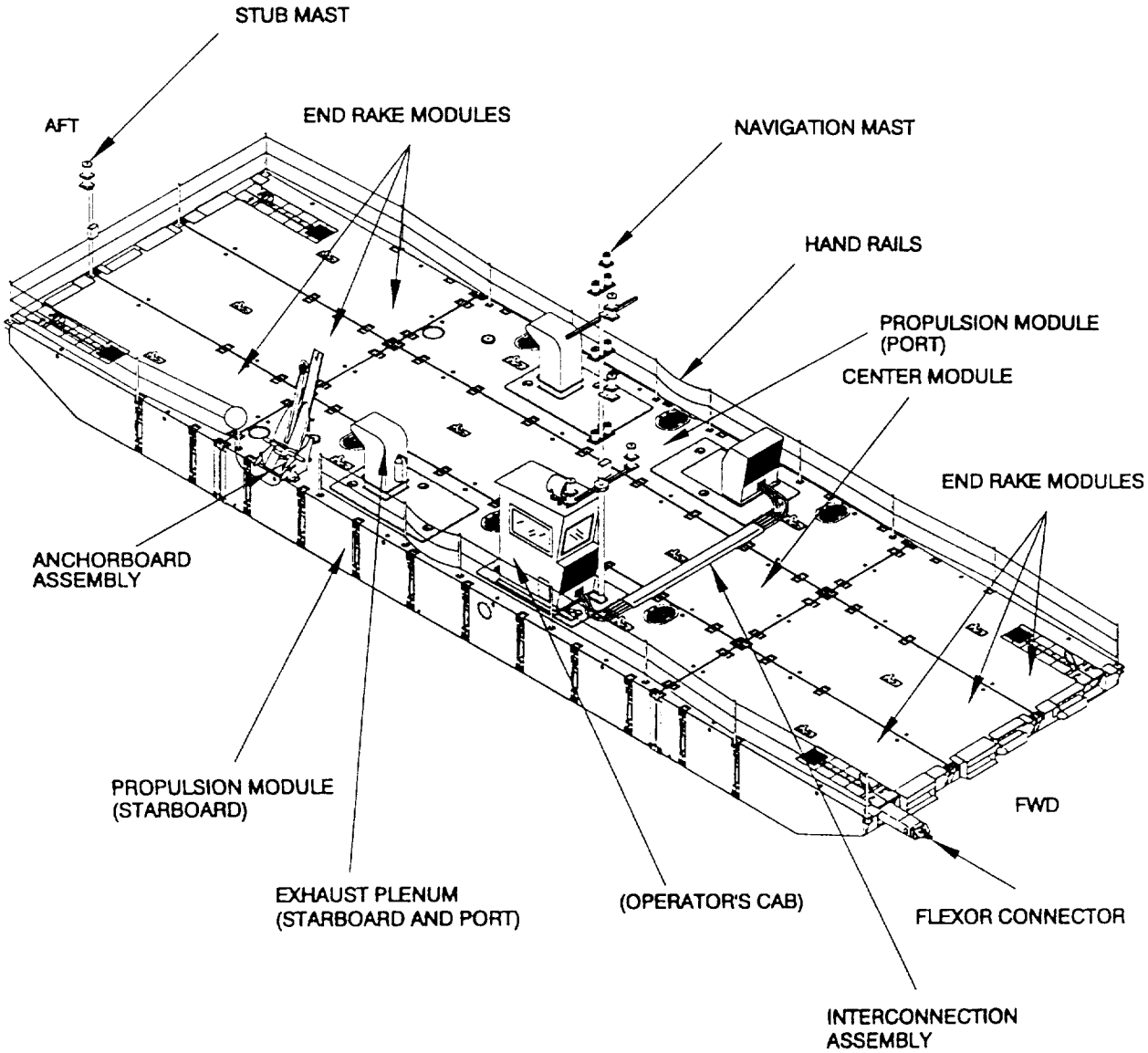

Figure 1-2. Powered Section.

a. Engine. 8 cylinder, water cooled, turbo charged, after cooled, two cycle, diesel marine engine, delivering 600 hp at 2100 rpm. With the exception of below deck Emergency Stop pushbuttons and automatic Emergency Stop actuation controlled by actuation of the fire suppression system, all operator control of the engine is accomplished from the operator's cab.

b. Exhaust System. The propulsion module exhaust system consists of a water cooled muffler assembly with inputs directly coupled from both engine turbocharger exhaust ports. The muffler is supplied with two exit ports, one is plugged and one is ported to the exhaust flapper, for configuration as either a port or starboard exhaust system. The piping between the turbocharger and muffler and between the muffler and exit exhaust flapper is a flexible silicon hose to accommodate for thermal expansion in the system.

c. Fuel System. Each propulsion module is equipped with a 400 gallon stainless steel fuel tank permanently welded inside the fuel compartment. Fuel suction and return lines are fitted with shut-off ball valves to isolate fuel to the tank when not in use or during repairs to the fuel system. A filler neck/strainer basket located on top of the fuel tank is accessible through a deck hatch from outside the fuel compartment. A dual purpose fuel-water separator and filter is located on the fuel tank in the fuel tank compartment at the rear of the module to remove water and contaminants from the diesel fuel.

d. Fuel-Water Separator/Filter. A dual purpose fuel-water separator and filter is located on the fuel tank in the fuel tank compartment at the rear of the module. Its main function is to remove water and contaminants from the diesel fuel.

e. Marine Gear. Mounted directly to the flywheel housing of the diesel engine, the Marine Gear provides the capability to reverse the directional rotation of the other drive train components making it possible to backflush the pump-jet. The transmission is equipped with an integral hydraulic system consisting of a pump, a shifting valve and internal hydraulic cylinders. The pump utilizes the transmission lubricating oil to operate hydraulic cylinders which shift the gearing the backflush, neutral or engaged configurations. The shifting valve is solenoid actuated from a toggle control switch in the operator's cab. In addition to powering the shifting cylinders, the pump also circulates case oil though an oil cooler that is plumbed into the engine raw water cooling system.

f. Transfer Case. The transfer case compensates for off set alignment between the output flange of the marine gear and the input flange of the pump-jet. It has a 1:1 gear ratio utilizing spur gears throughout and is equipped with an oil pump that circulates lubricating oil from its gear case though an oil cooler plumbed off of the engine raw water cooling system and back to the top of the transfer case to lubricate the upper gearing. The transfer case is connected to the marine gear and the pump-jet via drive shafts.

g. Machinery Guards. Removable metal machinery guards cover the drive shafts, engine flywheel, and alternator belt to protect personnel from contact with rotating parts.

h. Pump-Jet. Each propulsion module is equipped with a 360° steerable, pump-jet propulsion unit capable of delivering 5,000 lbs. of thrust. The pump-jet is works on the principle of a rotary pump and consists of a drive shaft driven upper gearbox assembly driving an impeller. Water is sucked into the pump-jet through a feeding funnel on the bottom of the module, is fed into the enclosing pressure casing, whose bottom plate is provided with three systematically arranged outlet nozzles from which water is ejected (angle 13°). A hydraulic steering motor drives a spur gear through a planetary gearbox to rotate the pressure casing and bottom plate (steering nozzles) in both senses of rotation without limitation. A second planetary gearbox is provided to facilitate emergency steering. (An emergency steering control stand mounts above deck and interfaces with the through shaft of the planetary gearbox.) The emergency steering gearbox contains a spring set, hydraulically released disc brake. The brake maintains the position of the steering nozzle until rotation is called for by the operator. In the case of hydraulic system failure the brake can be released via the hydraulic hand pump, to facilitate emergency steering. An electromechanical feedback unit monitors relative steering position of the steering nozzle and transmits that position to a dial indicator in the operator's cab. An electric sensor monitors the oil level in the upper gearbox and sends a signal to an indicating light in the operator's cab when the oil level is below the required level.

i. Duplex Strainer. The duplex strainer is located by the diesel engine and is considered part of the raw water system. Its purpose is to collect debris from raw sea water to prevent it from entering the water pump.

j. Hydraulic System. The hydraulic system contained within each propulsion module provides the steering control for the pump-jet. The system includes an axial piston hydraulic pump mounted off the marine gear. A fixed displacement hydraulic motor mounted to the planetary gear drive off the pump-jet, hydraulic brake, control valves, filters, and a 26 gallon hydraulic reservoir. The reservoir is fitted with an external sight level, in-tank suction strainer, and in-tank return line filter. A pressure filter is located between the hydraulic pump and the way valve control block. The interconnect piping between components includes a short section of hose to minimize the effects of vibration.

k. Hydraulic Pump. An flange mounted, axial piston, hydraulic pump driven by the marine gear provides hydraulic pressure to operate the hydraulic steering motor and normal release of the hydraulic steering brake.

l. Hydraulic Motor. A fixed displacement, axial piston, hydraulic motor, is flange mounted on the input shaft of the (steering) pump-jet steering planetary gearbox. Hydraulic flow from the hydraulic pump is directed through the way valve unit to drive the hydraulic motor in a clock-wise or counter-clockwise direction to rotate the steering nozzles.

m. Way Valve Unit (A2JB1 - Steering). The proportional way-valve is controlled hydraulically by means of electrically operated proportional pressure valves or manually by means of a control lever mounted on the valve unit assembly. The way-valve directs hydraulic fluid via the load retaining valve to the hydraulic motor, to control the direction in which the hydraulic motor rotates. A brake valve located on the Pump-jet directs hydraulic pressure to the emergency steering planetary to release the hydraulic brake when rotation of the hydraulic motor is initiated.

n. Three-Way Valve. A manually operated control handle on the valve is positioned to select normal hydraulic operation or to isolate the normal hydraulics so that the emergency steering hydraulic hand pump can be used to release the hydraulic brake in the emergency steering mode.

o. Hydraulic Reservoir. The hydraulic reservoir is the holding tank for the system hydraulic fluid. The tank is equipped with a fill and drain for replenishment of the fluid, a sight gauge to determine fluid level, a return line filter with dirt indicator to filter hydraulic fluid returning to the tank and an outlet line strainer. The tank has a removable access panel to facilitate cleaning. A float switch monitors fluid level and lights an indicating light in the operator's cab if the fluid level is below the required level.

p. Bilge Pumps. Each propulsion module is equipped with six bilge pumps, capable of pumping 3,700 gph. Five are located in the engine compartment and one in the fire suppression compartment. The pumps can be controlled from the operator's cab by toggle switches and can be tested at the bilge pump junction boxes.

q. Fire Detection and Fire Fighting Equipment. A fixed CO_2 fire suppression system is provided for the protection of the machinery and fuel compartments. Thermal detection probes activate an alarm in the operator's cab if the temperature in the propulsion module reaches 225°F. A remote cable pull box is located on each propulsion module, in the deck over the machinery compartment. Pulling the handle activates the fire suppression system and floods the compartments with CO_2. A portable CO_2 fire extinguisher is mounted on either exhaust plenum.

r. Emergency Steering System. Each propulsion module is equipped with an emergency steering system consisting of a mounting stand, shaft with pillow block bearing support, and hand crank. It is stored in the lazaret and is used to manually maneuver the MCF in the event of a hydraulic system failure.

s. Pump-Jet/Thruster Junction Box (A2JB2). The Pump-Jet/Thruster Junction Box is mounted opposite the personnel access hatch approximately mid way in the machinery compartment. The box contains relays and circuitry necessary to operate the way valve steering solenoids circuit breakers for over-current protection.

t. Pump-Jet/Thruster Direction/Aux. Battery Junction Box (A9). The Pump-Jet/Thruster Direction/Aux. Battery Junction Box is mounted on the machinery compartment side of the bulkhead that separates the machinery compartment and the lazaret. The box contains an isolation diode, a voltage regulator/battery charging circuit, a 24VDC/24VDC voltage regulator, two 24VDC auxiliary battery packs, a control relay, and two terminal blocks. The enclosure is vented due to possible off-gassing of the batteries.

u. Propulsion Module Junction Box (A3). The propulsion module junction box is located forward in the machinery compartment opposite the main storage batteries. The box is the termination point for connection of three of the four main power cables that connect the propulsion modules to the cab.

v. Engine Junction Box (A4). The engine junction box is located inboard and next to the personnel access hatch. The steel enclosure contains the diesel engine governor controller, terminal strips and two relays controlling the Emergency Stop air flap solenoid and the emergency malfunction warning bell. An engine Emergency Stop pushbutton is mounted to the enclosure cover.

w. Bilge Pump Control Panel (A5). The bilge pump control panel is mounted very near the center line of the propulsion module inboard of the personnel access hatch. The panel consists of a steel enclosure with five toggle switches for each bilge pump in the machinery compartment.

x. Propulsion Module Circuit Breaker Panel (A6). The propulsion module circuit breaker panel is located in the machinery compartment, opposite the engine junction box, next to the personnel access hatch. The panel consists of a steel enclosure with fourteen circuit breakers mounted to the enclosure cover. Thirteen circuit breakers are protected by a plexiglass guard plate mounted with stand-offs. Access slots permit operation of the circuit breakers while protecting them from accidental shut off or damage.

y. Single Bilge Pump Control Panel (A7). The single bilge pump control panel is located in the lazaret and consists of a steel enclosure mounted to the bulkhead that separates the lazaret from the machinery compartment. A single toggle switch for the lazaret bilge pump operation is mounted to the enclosure cover.

z. Vent Fan Relay Enclosure (A8). The vent fan relay enclosure is located in the machinery compartment just forward of the pump-jet on the same side as the personnel access hatch. The assembly consists of a steel enclosure with a plug-in type receptacle located on the bottom. The enclosure is the power source for vent fan operation and contains the relay for fan operation. Once the exhaust plenum is mounted the power cord that is hard wired to the fan can be plugged into the receptacle to complete the installation. A screw-on cover protects the receptacle when not in use. The power cord from the fan is equipped with a screw cap that matches the receptacle thread to secure the cord to the enclosure.

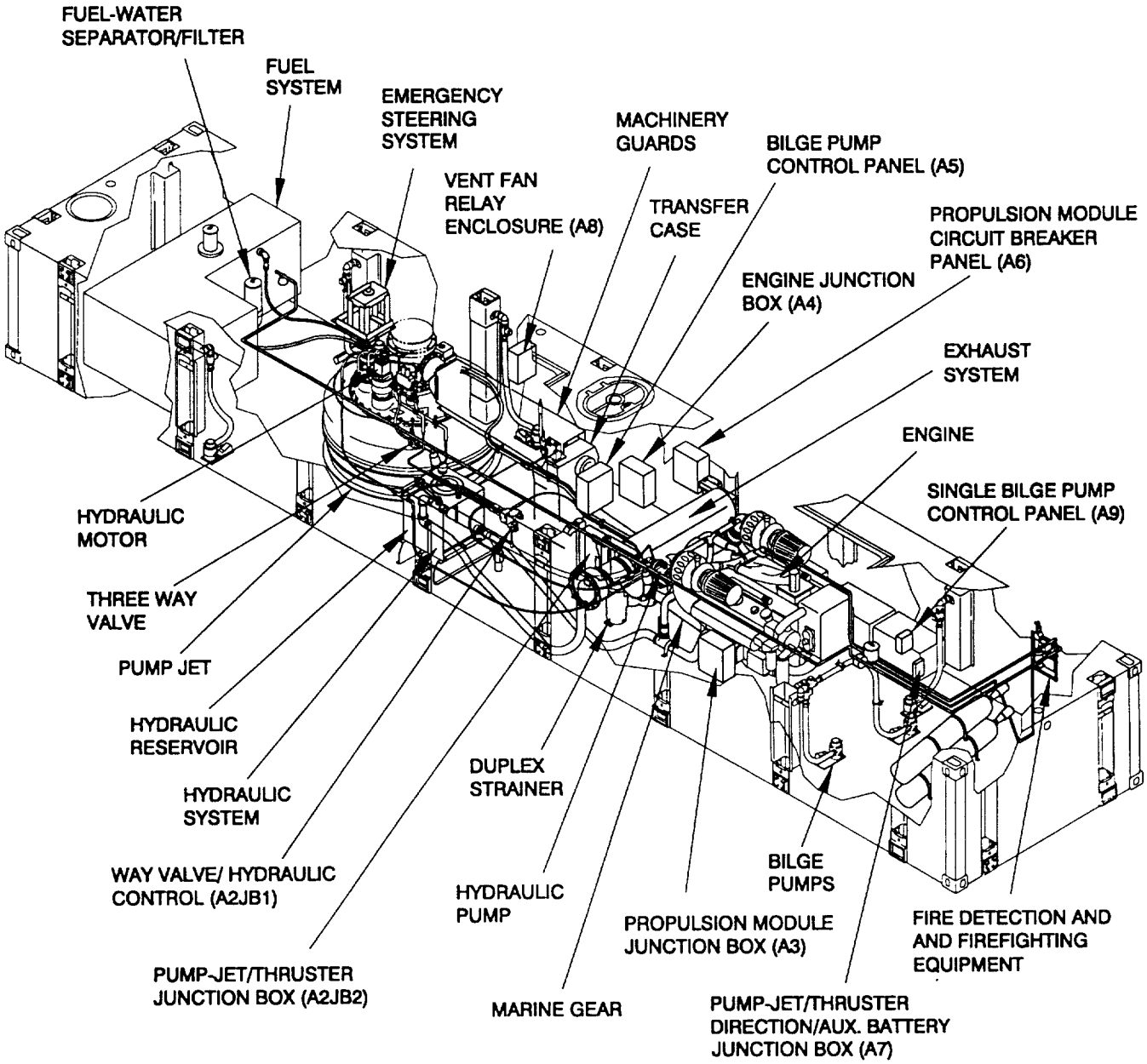

Figure 1-3. Propulsion Module Major Internal Components.

1-10.2 Center Module. The Center Module (non-powered) (Figure 1-4) is basically an empty container. Nominal dimensions of the Center Module (non-powered) are 8 feet wide 40 feet long and 4 feet 6 inches deep, ISO compatible. Each Center Module (non-powered) has two 25 ton capacity lifting shackles, flush mounted in the deck. The textured deck and smooth bottom are free of any protrusions that might obstruct stacking. Access for internal leak detection of each compartment is provided by three recessed threaded plugs. Alternating male and female connectors are equally spaced along both sides and ends of the non-powered module. These lock assemblies are stowed flush with the surface, and when deployed they connect modules with minimum clearance. Weight of the Center Module (non-powered) is approximately 22,500 pounds.

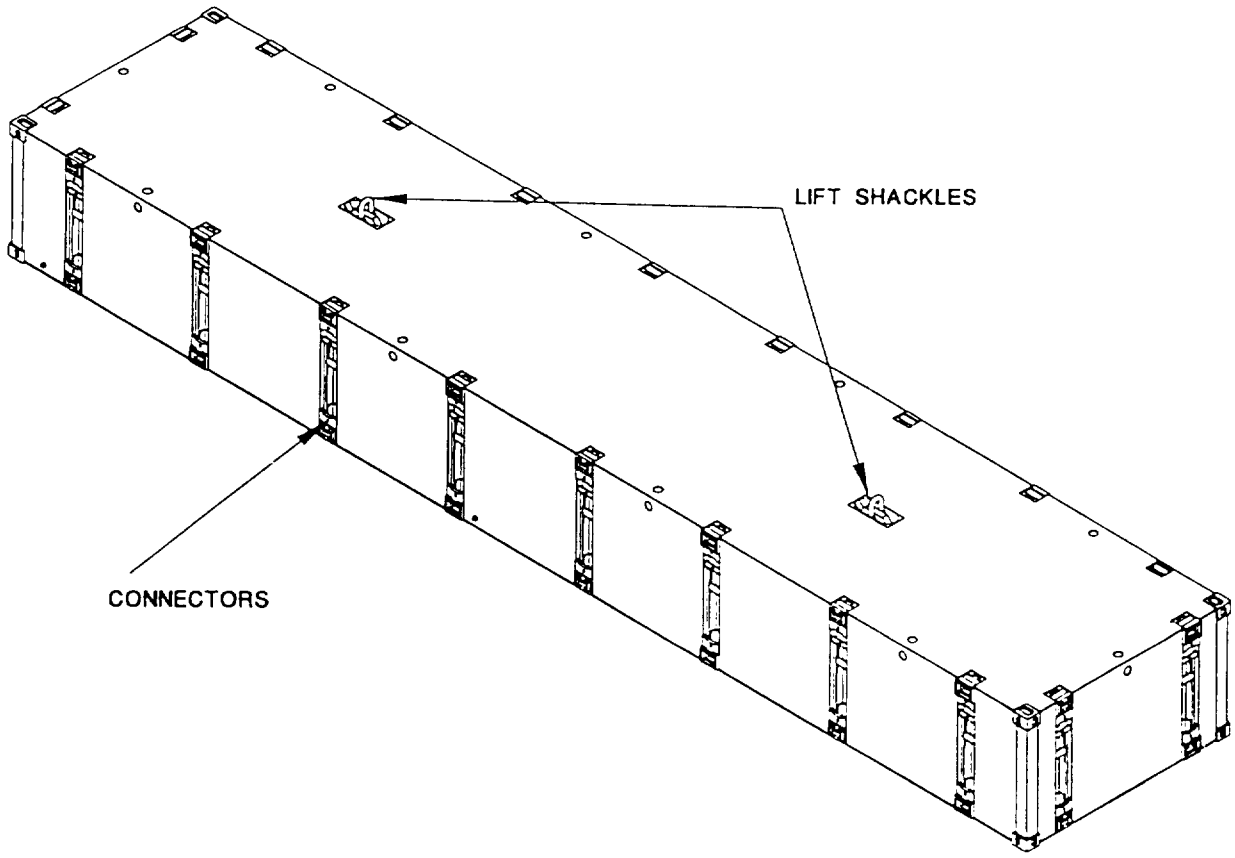

Figure 1-4. Center Module (Non-Powered).

1-10.3 End Rake Modules. In order to achieve Navy Lighterage (NL), MCS, and MCF compatibility, End Rake Modules used in the MCF are produced in three unique types, Right Hand and Left Hand Rake Modules (Figure 1-5), and Center Rake Module (Figure 1-6). Nominal dimensions of the single compartment end rake modules are 8 feet wide 20 feet long and 4 feet 6 inches deep, ISO compatible. The Right Rake and Left Rake Modules are flexor s connectable. Access for internal leak detection for each End Rake Module is provided by a recessed threaded plug. Weights of the Right and Left Rake Modules are 11,500 pounds. The Center Rake Module weighs 10,600 pounds.

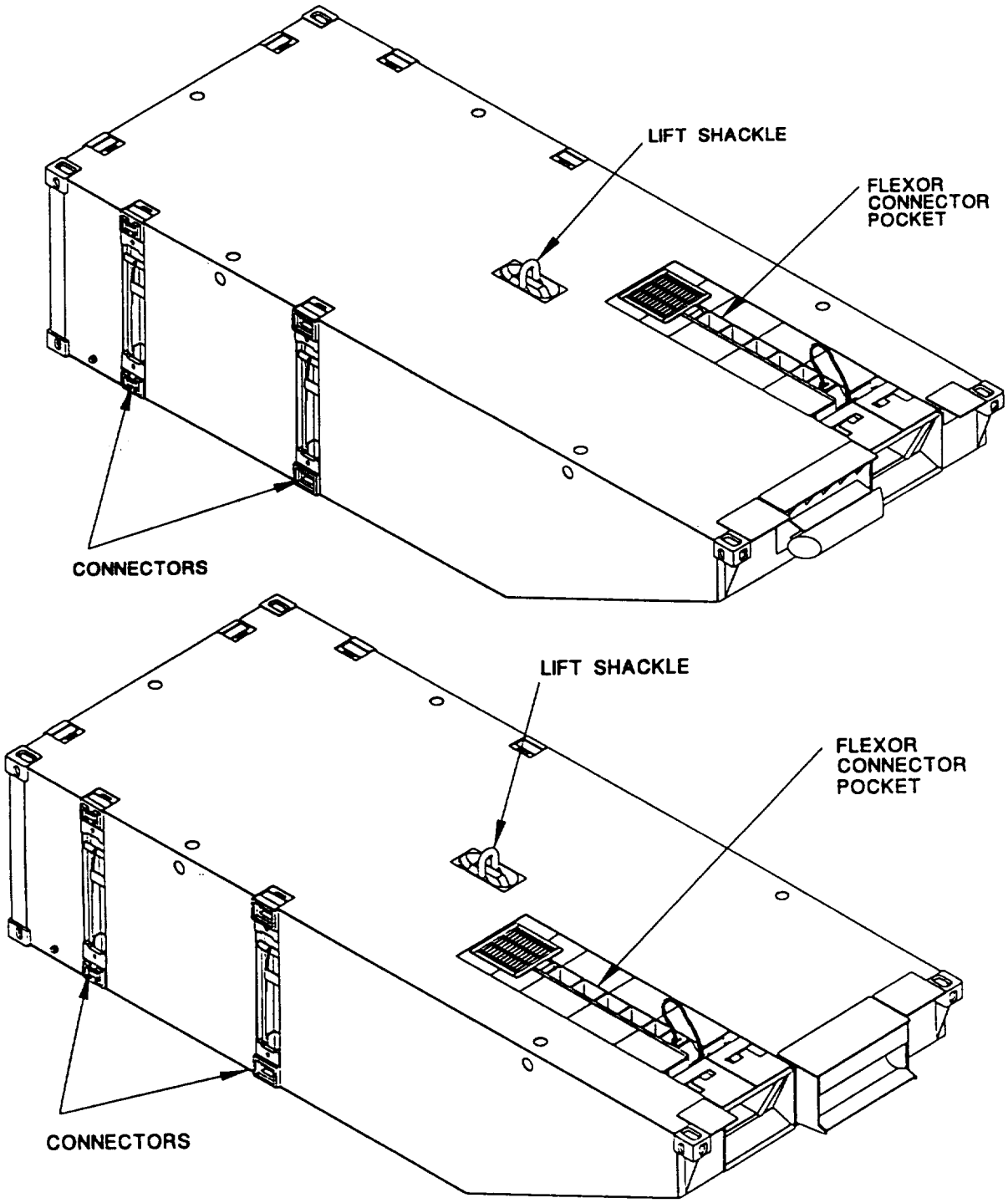

Figure 1-5. End Rake Modules, Left Hand (Port) and Right Hand (Starboard).

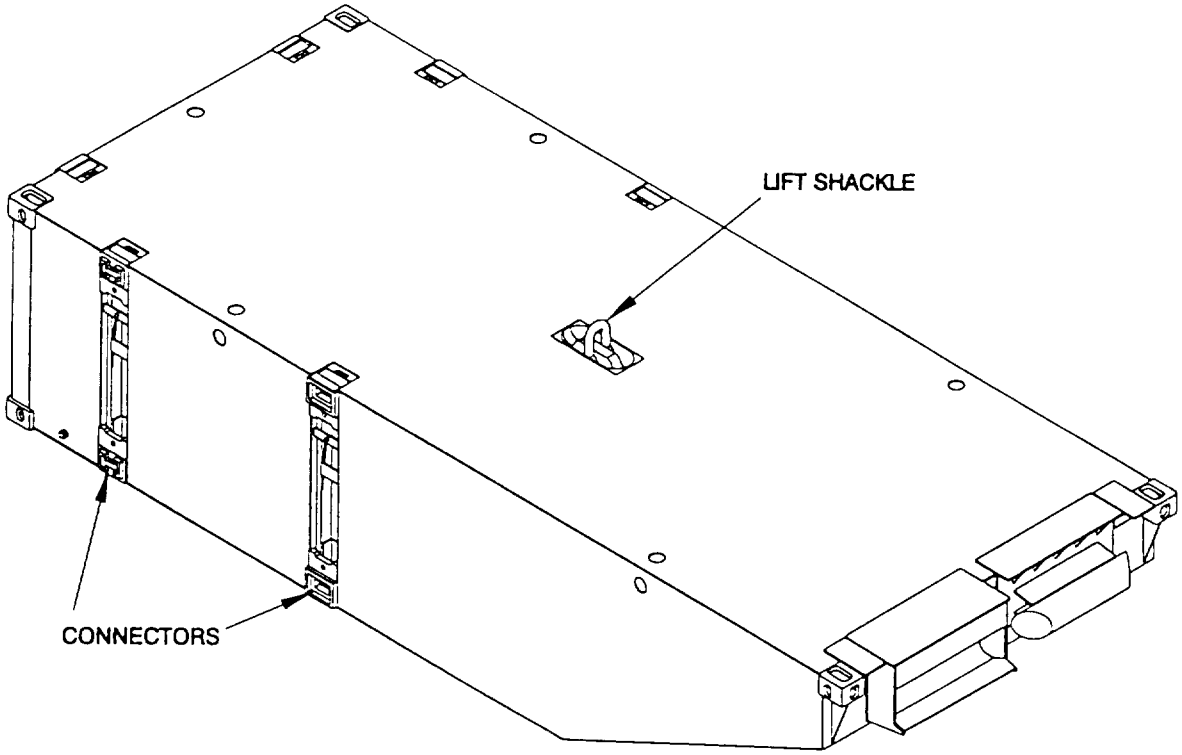

Figure 1-6. End Rake Module, Center.

1-10.4 Connector Assemblies. Two types of connectors (Figure 1-7 and 1-8) are used in the assembly of the MCF. A male/female vertical connector (Figure 1-7) is used to connect modules to modules, and a Flexor connector (Figure 1-8) is used to connect sections to sections. Flexor connectors are compatible with the MCF and NL causeway sections.

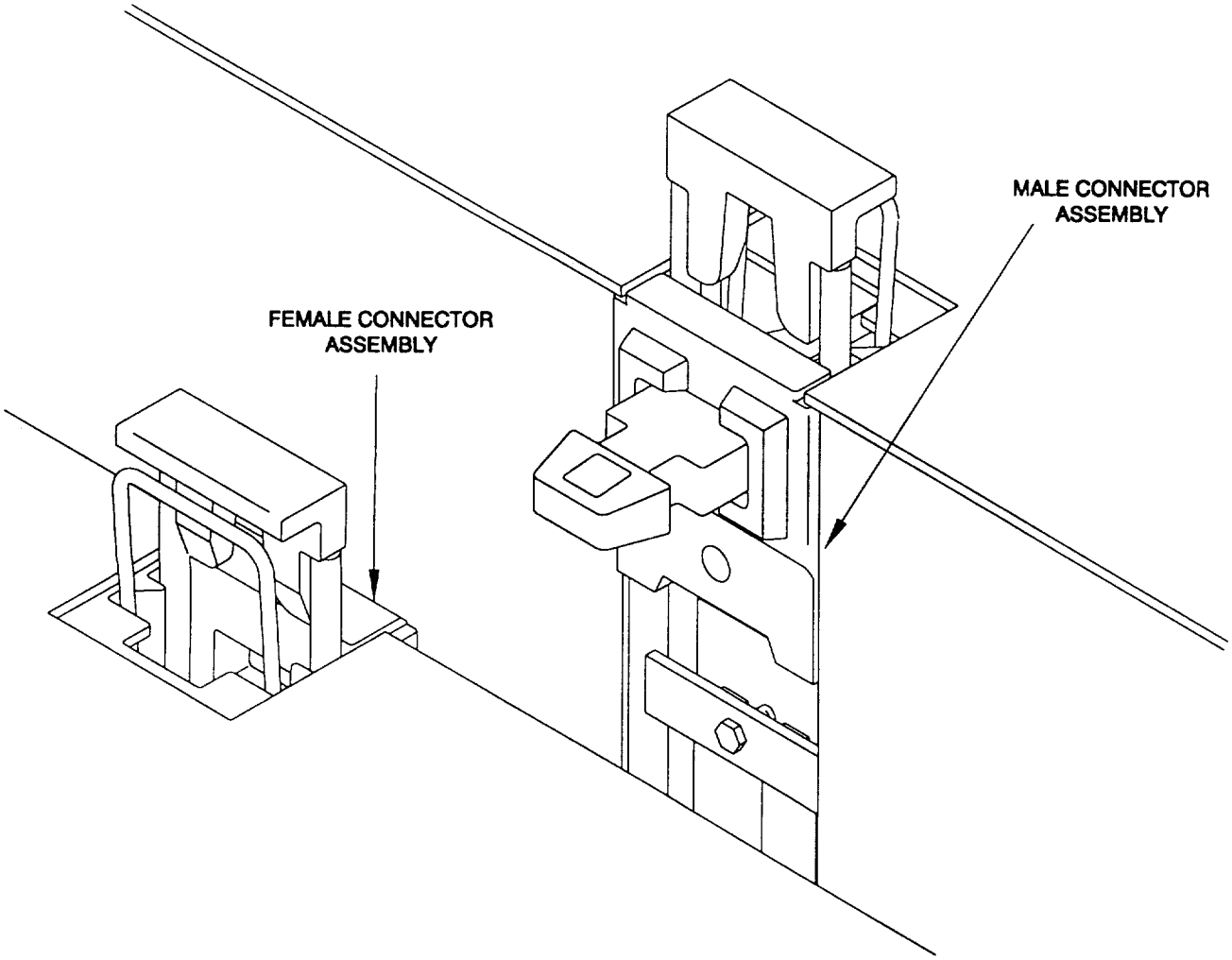

Figure 1-7. Male/Female Connector Assembly.

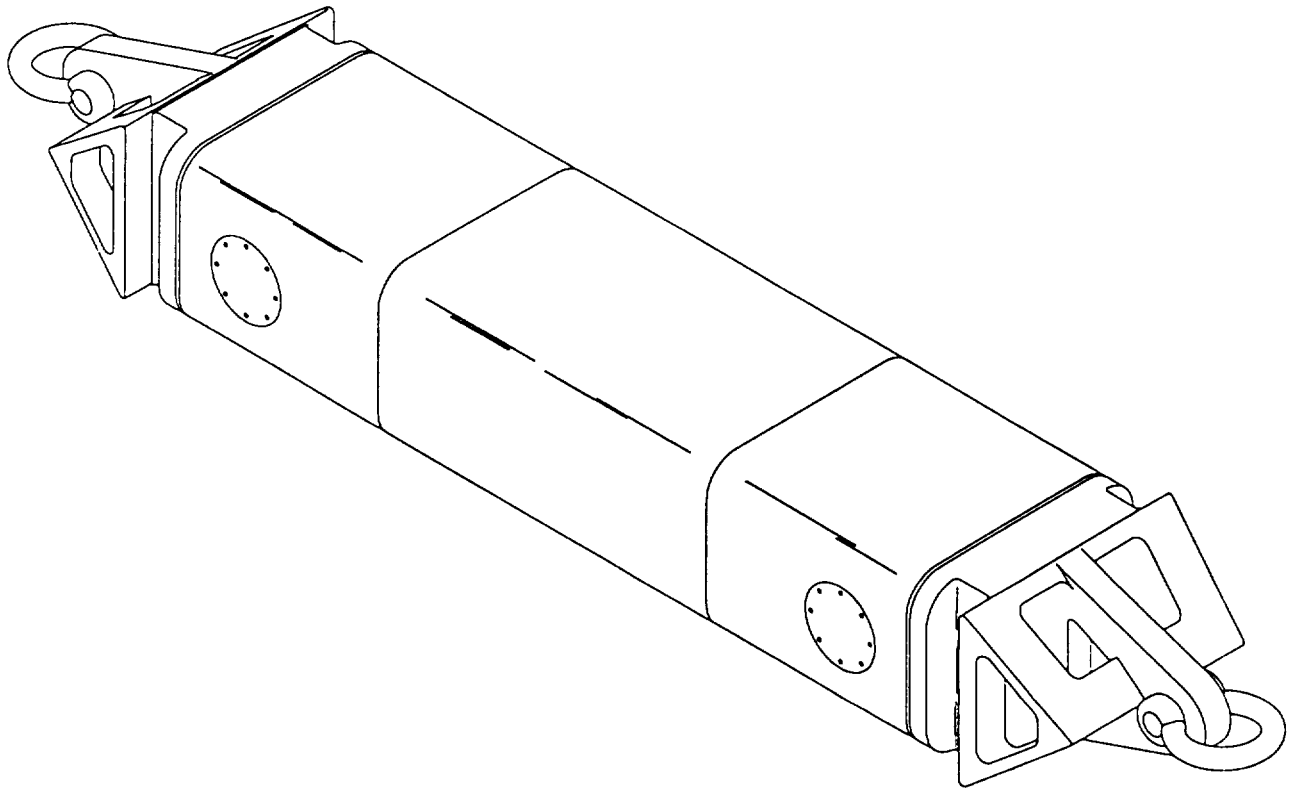

Figure 1-8. Flexor Connector.

1-10.5 Operator's Cab. The operator's cab (Figure 1-9) is a portable steel fabricated unit which can be mounted on either the Port or Starboard Propulsion Module. Because of its design, size, location and controlled cabling it accommodates drive through capability of heavy armored equipment. It houses the operational controls, indicators, and circuit panels required to operate the MCF as well as a magnetic compass, VHF-FM receiver-transmitter and a SINCGARS radio with antenna. The mast assembly enclosure contains primary and spare main and stub mast navigational light controls and indicators. A navigational horn and a 12 inch diameter 24 VDC marine duty spot light are located on the cab roof. The spot light can be controlled by a manual remote lever control which penetrates through the cab roof for the operator . The circuit breaker panel contains eleven position test switch for circuit checks. The cab also contains a heater to maintain temperature at 65° F minimum in an ambient temperature of -10°F. The receptacles for the interconnection cables to operate both propulsion modules from one set of controls are located within the cab. The main navigational mast mounting clamps and supports are externally mounted to the cab.

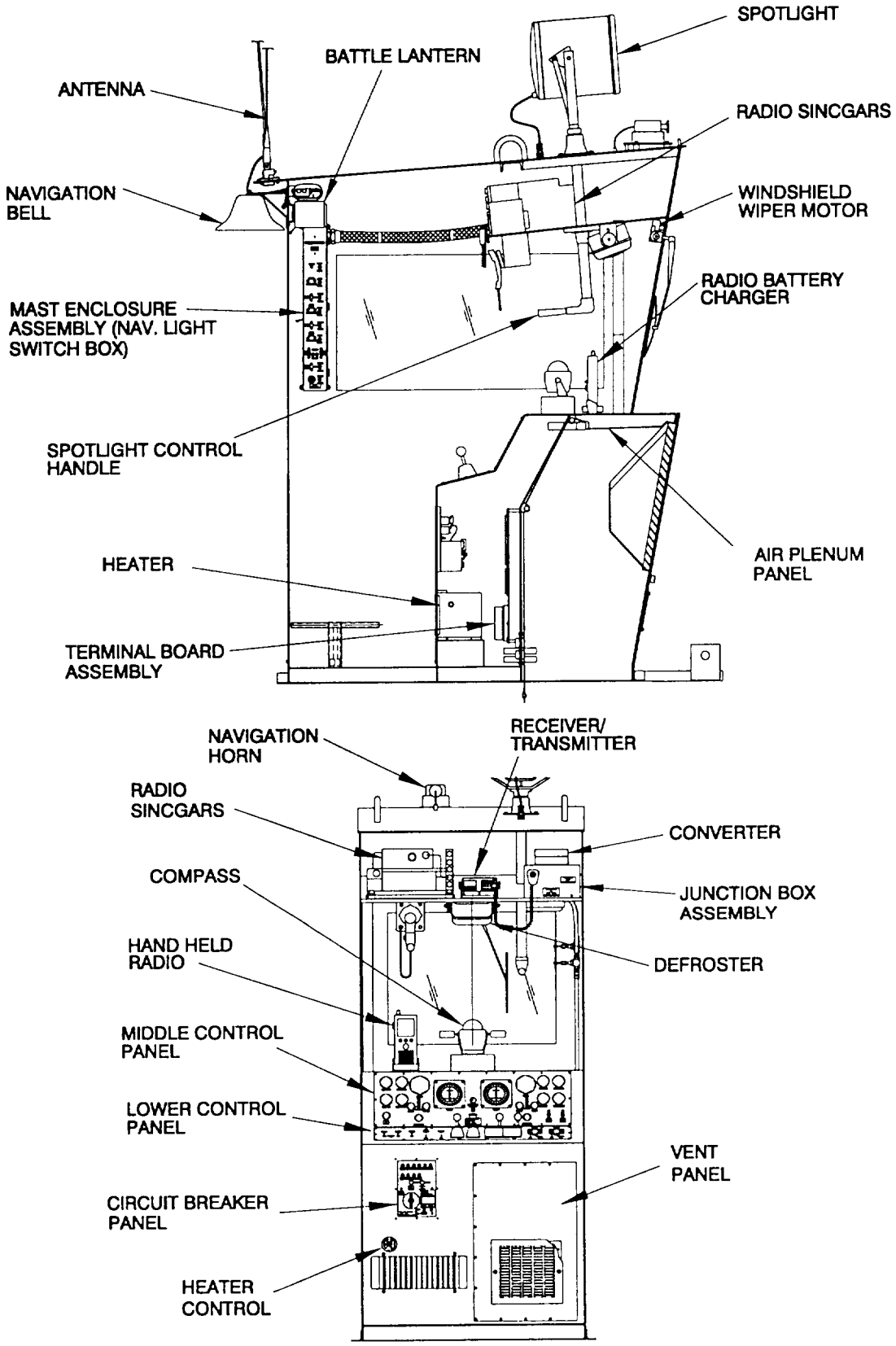

Figure 1-9. Operator's Cab.

1-10.6 Ventilation. Although not a part of the propulsion module itself, intake plenums (Figure 1-10) and exhaust plenums with ventilation fans (Figure 1-11) are mounted over the engine and pump-jet to facilitate the fresh air flow through the compartment and limit the engine compartment to a temperature rise of 20° F above ambient.

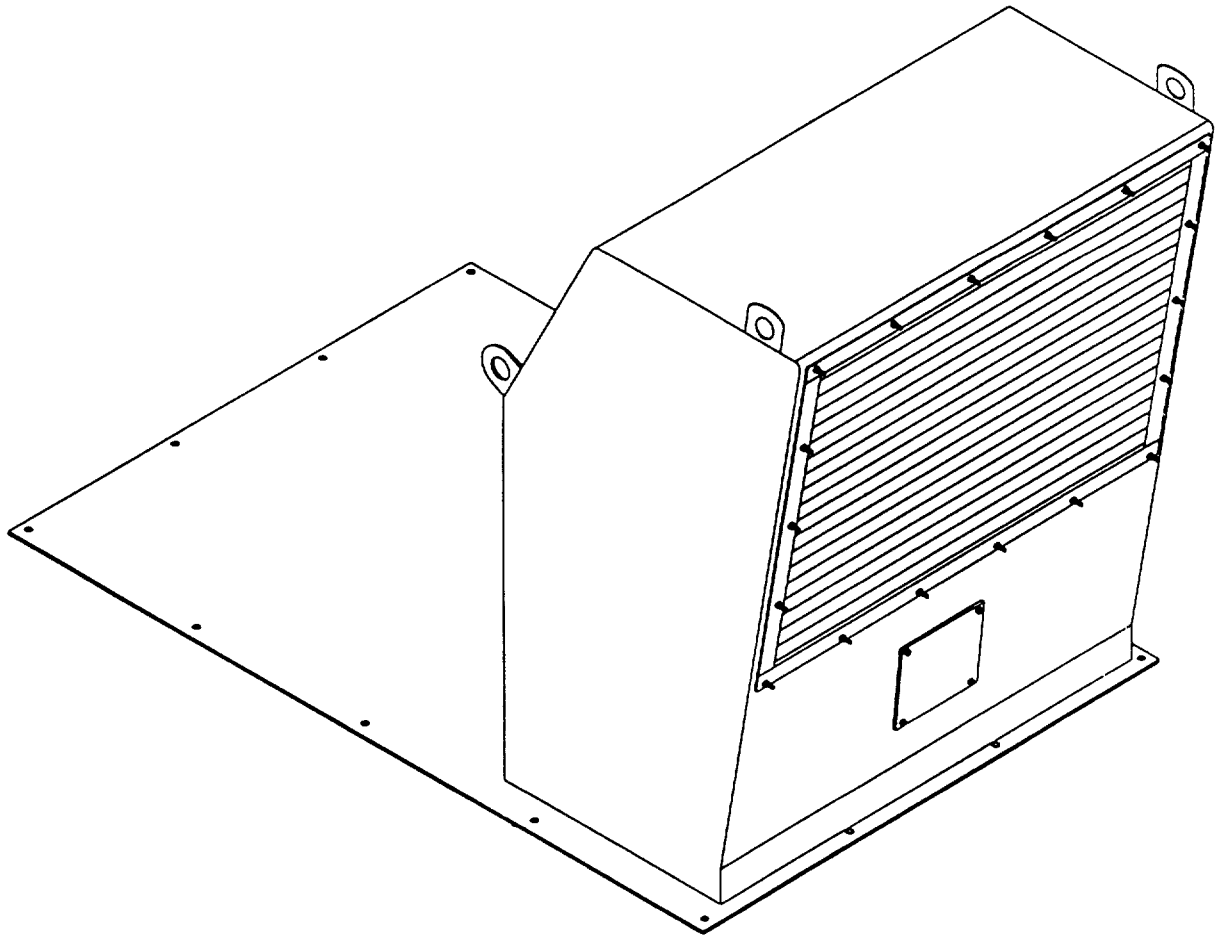

Figure 1-10. Intake Plenum.

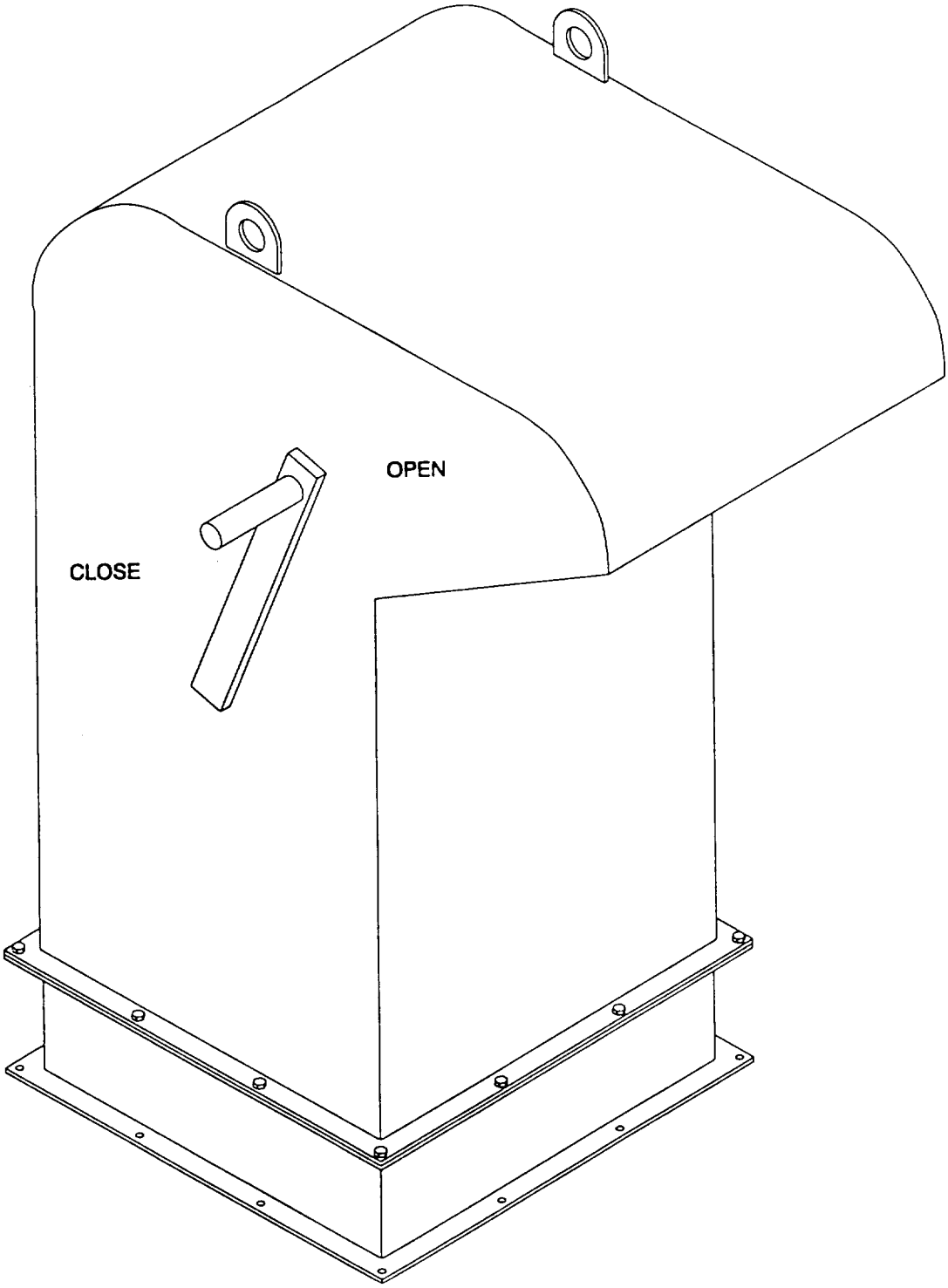

Figure 1-11. Exhaust Plenum.

1-10.7 Communication and Electronic Equipment. Within the operator's cab, communication equipment provided consists of a marine VHF-FM radio with Digital Selective Calling capability programmable with weather channels, SINCGARS FM Radio and a VHF-FM radio with hands free capability. Antennas are mounted on the outside and roof of the operator's cab.

1-10.8 Navigation Lights. Mounted on the operator's cab propulsion module, are the Main Navigational Mast (to the front and side of the operator's cab) (Figure 1-12) and the Stub Mast in the Aft (Figure 1-13). These provide the necessary navigational running lights for signal and safety while the MCF navigates the waterways.

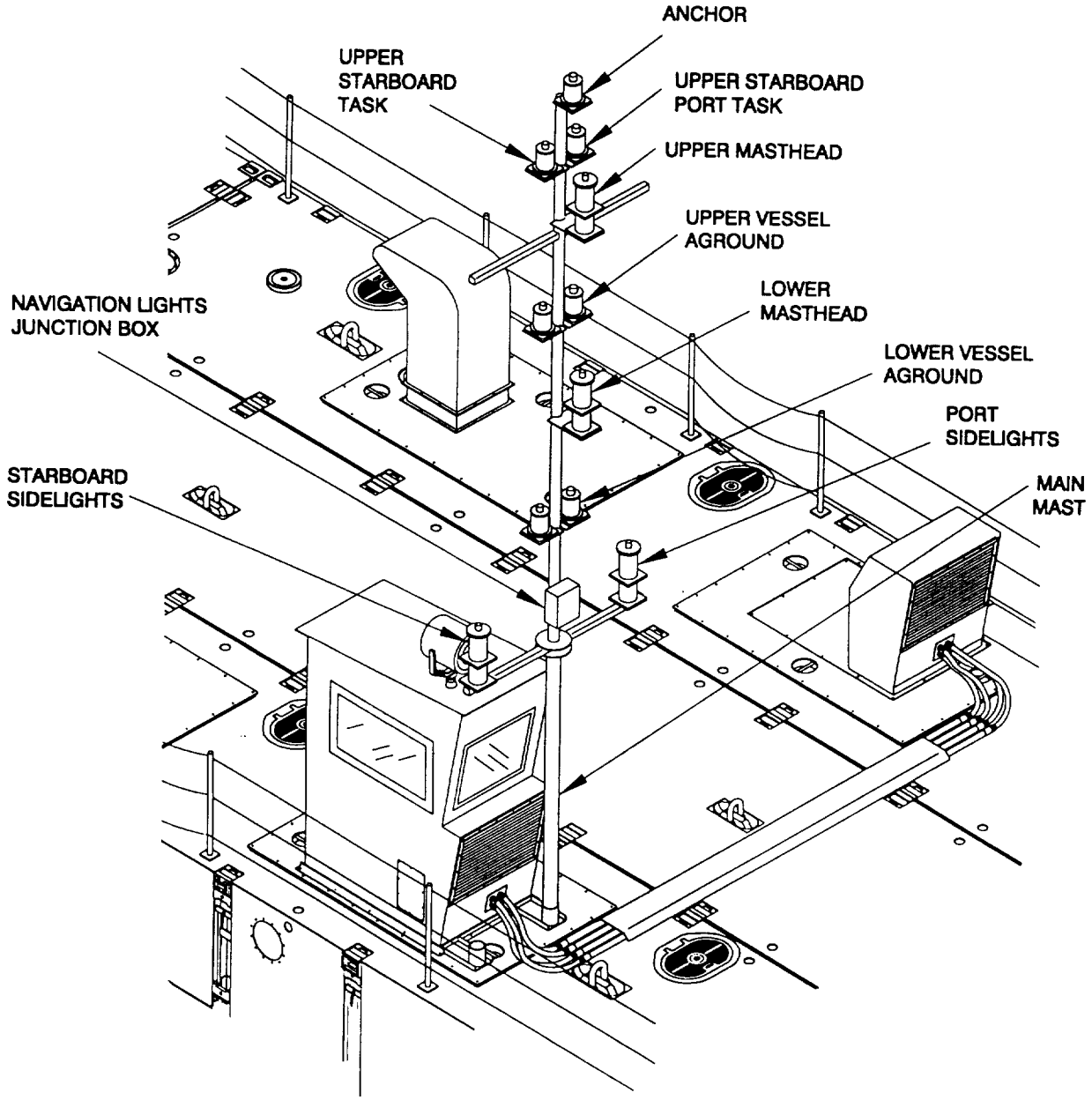

Figure 1-12. Main Navigation Mast.

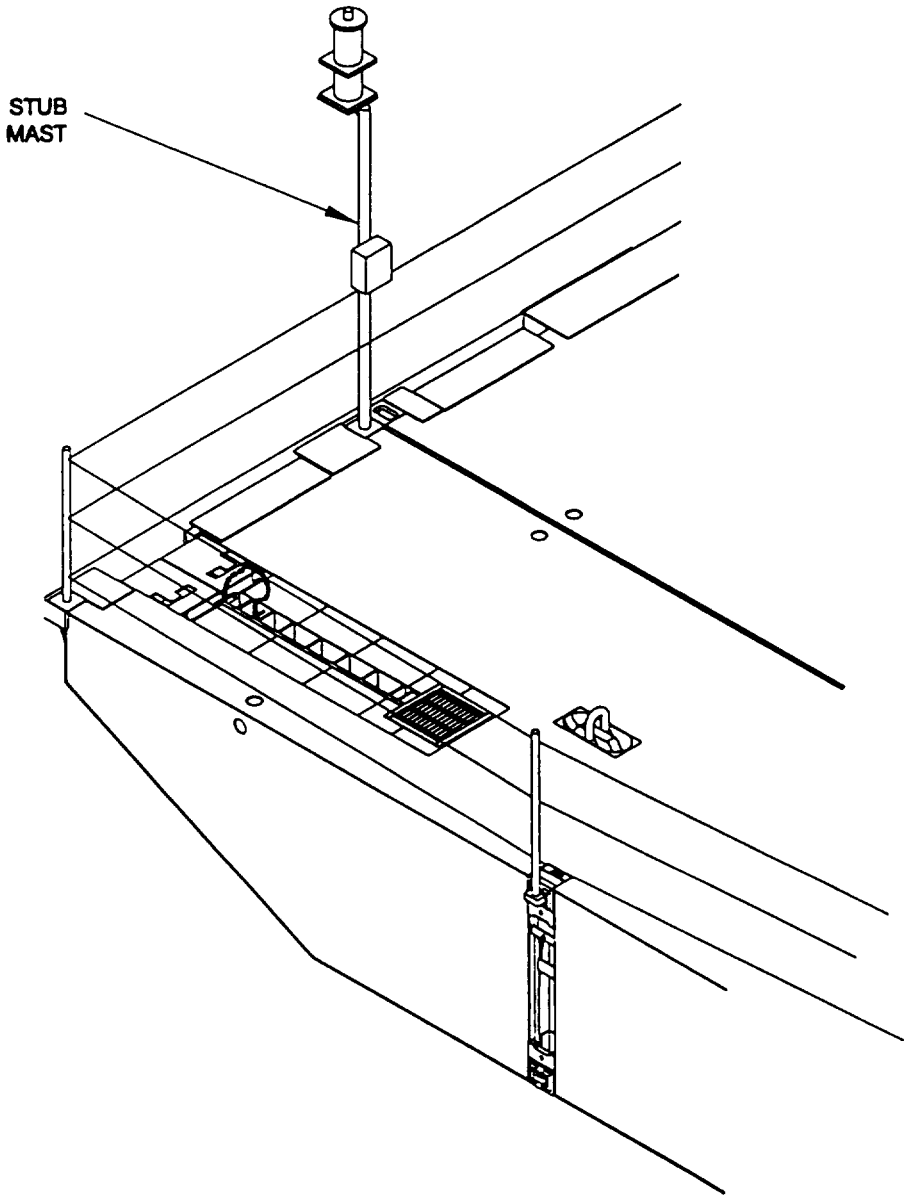

Figure 1-13. Stub Mast.

1-10.9 Module Electrical Interconnection Cables. The two propulsion modules are linked together with a reinforced and hardened set of interconnection cables (Figure 1-14). This cable set allows operation commands for both engines and Pump-Jet/Thrusters to come from the one operator's cab to be transmitted to both propulsion modules. The cable set is joined at the receptacles located in the front of the operator's cab and the front of the intake plenum on the opposite propulsion module.

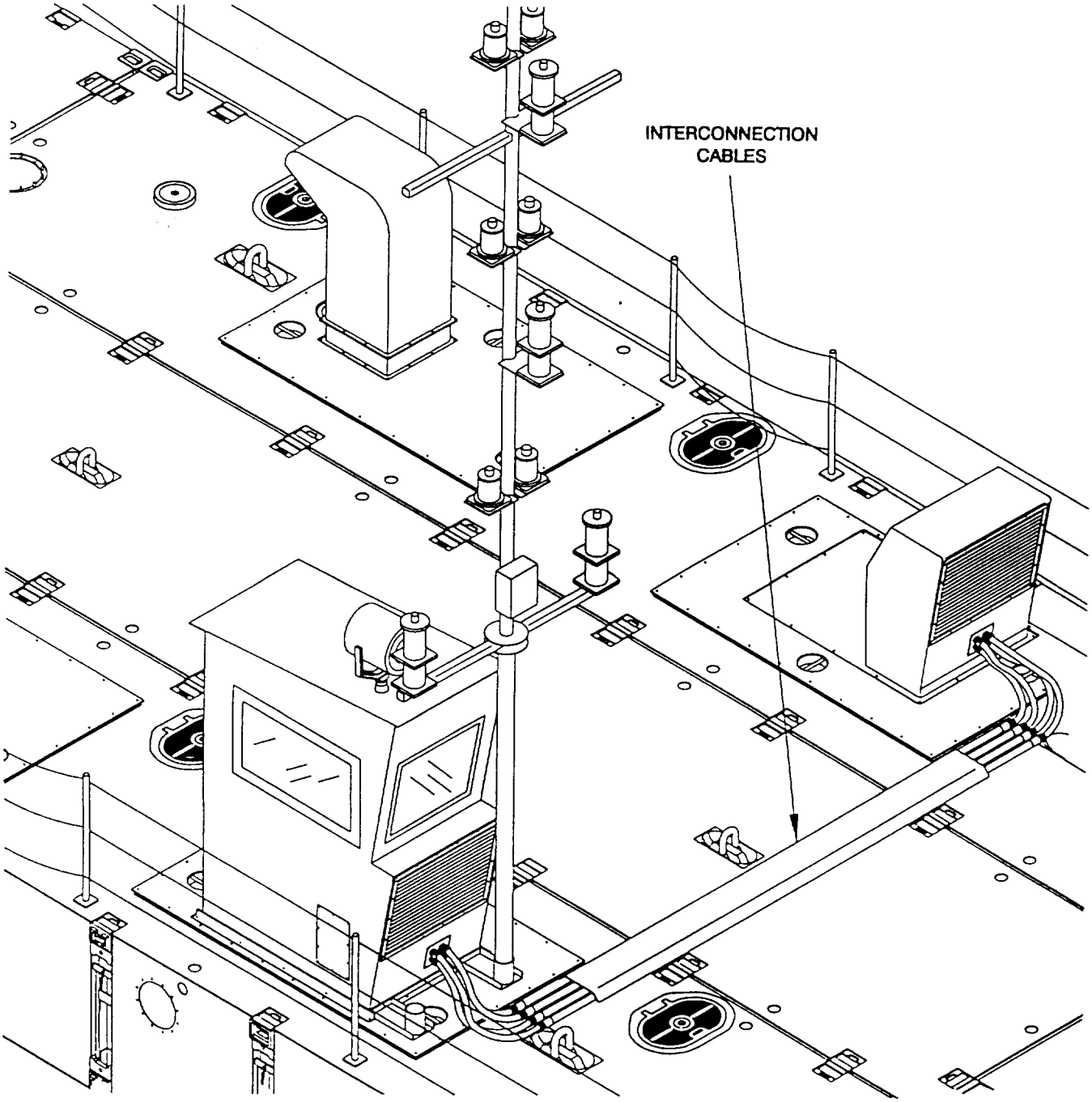

Figure 1-14. Interconnection Cables.

1-10.10 Anchorboard. A 3500 pound emergency anchorboard assembly (Figure 1-15) is mounted on the starboard propulsion module. If all power or another emergency causes the MCF to lose steering or become inoperative, the 1500 pound anchor can be manually deployed by the crew, with a marking buoy attached. When the inoperative MCF becomes operational or is towed away, the crew disconnects the anchor. The buoy marks the location of the anchor for retrieval by another watercraft.

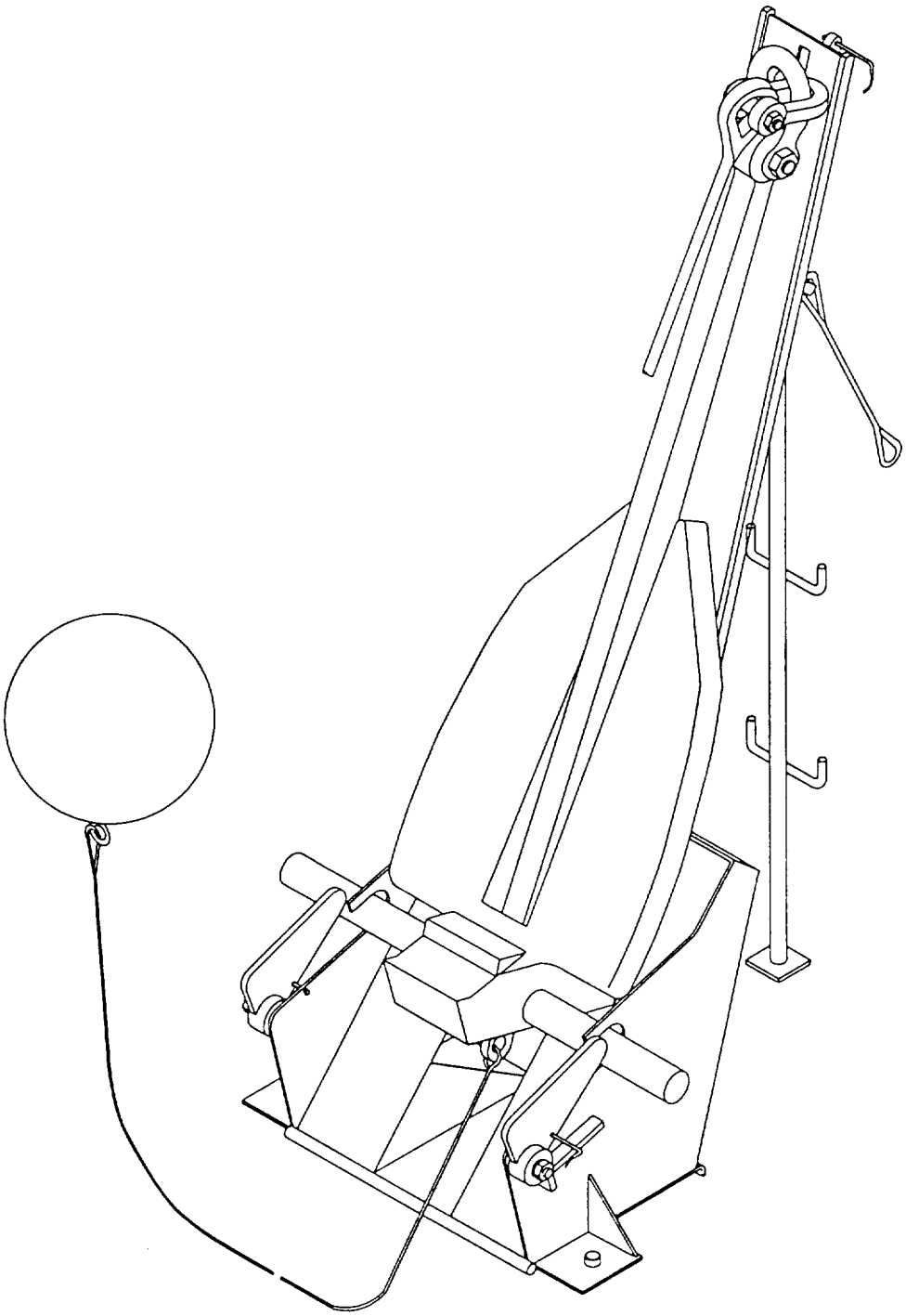

Figure 1-15. Anchorboard Assembly.

1-11 INTERMEDIATE SECTION. The intermediate section (Figure 1-16) is made-up of three Center Modules (non-powered) and six End Rake Modules. Each Center Module (non-powered) is 8 feet wide and 40 feet long. Each of the six End Rakes are 8 feet wide and 20 feet long. All modules have a depth of 4 feet 6 inches. The End Rakes are compatible with U.S. Navy flexor attachments and are fully compatible with ISO-container standards. Weight of the section is approximately 134,700 pounds.

1-11.1 Center Module. Reference paragraph 1-10.2 for description of center module.

1-11.2 End Rake Module. Reference paragraph 1-10.3 for description of end rake module.

1-11.3 Connectors. Reference paragraph 1-10.4 for description of connectors.

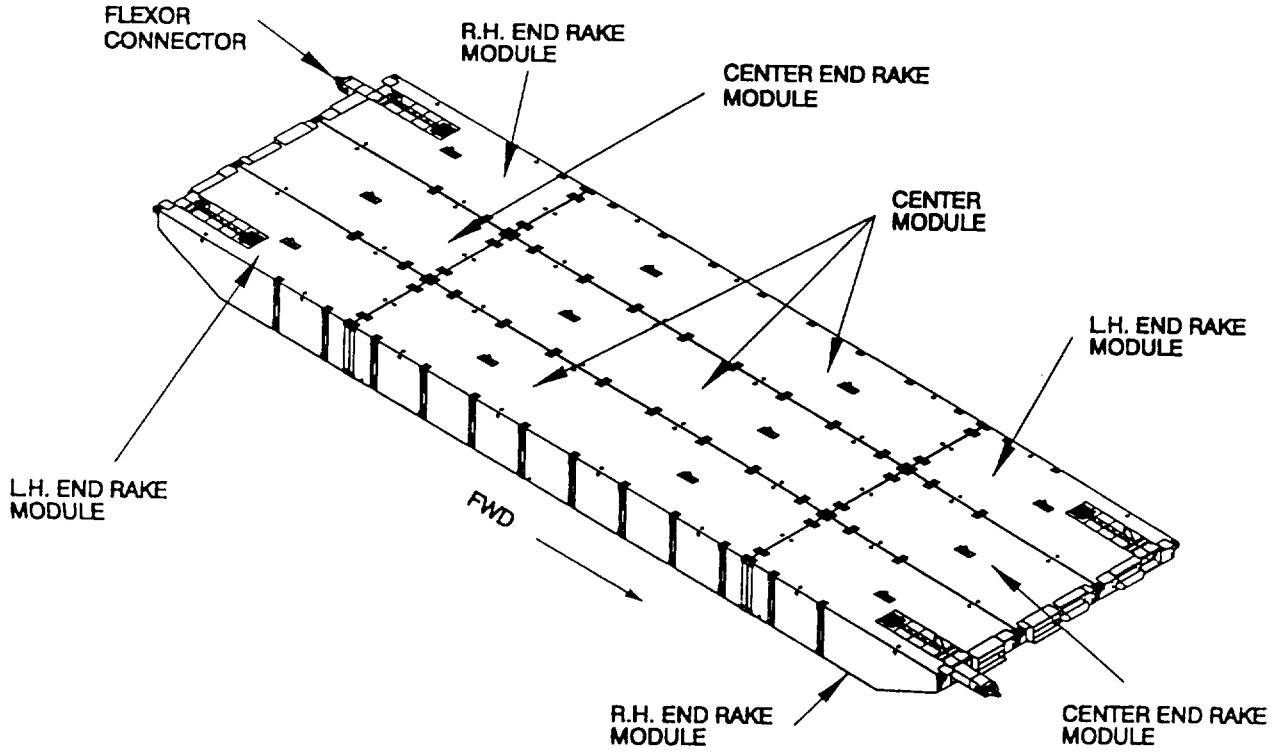

Figure 1-16. Intermediate Section.

1-12 COMBINATION BEACH/SEA END SECTION. The Combination Beach/Sea End Section (Figure 1-17) is made-up of three Center Modules (non-powered), three End Rake Modules and three Combination Beach/Sea End Modules. The ramp slope to the beach is 10 degrees slope and has a removable Rhino Horn for mating to Army/Navy lighters. Each combination beach/sea end rake module is 8 feet wide and 25 feet long. The section is completely interchangeable and interoperable with center modules (non-powered). Weight of section is approximately 141,900 pounds. When operating in the alternate configuration (Figure 1-18), with the Beach End Modules in the inverted position, P3 Adaptor Modules are included in the breakdown increasing the length of the completely assembled MCF approximately 329 feet.

1-12.1 Center Module. Reference paragraph 1-10.2 for description of center module.

1-12.2 End Rake Module. Reference paragraph 1-10.3 for description of end rake module.

1-12.3 Beach/Sea End Module. Nominal dimensions of the beach/sea end module (Figure 1-19) is 8 feet wide and 25 feet long and four feet 6 inches deep with a ramp slope of 10 degrees. Each module is ISO compatible, removable rhino horn for mating to Army/Navy lighters and has a deck structure bearing capacity of 5,000 psf minimum. Weight of each combination beach/sea module is approximately 13,600 pounds.

1-12.4 P-3 Adaptor Assembly. Each P-3 adaptor assembly weighing approximately 2,950 pounds (Figure 1-20) is a steel fabrication 8 feet wide, 3 feet long, 4 feet 6 inches deep. On each end are two male interlock connectors on one side and two female interlock connectors on the other side. They allow the Beach End End Rake Modules to be mated to the center modules (non-powered) in the inverted position.

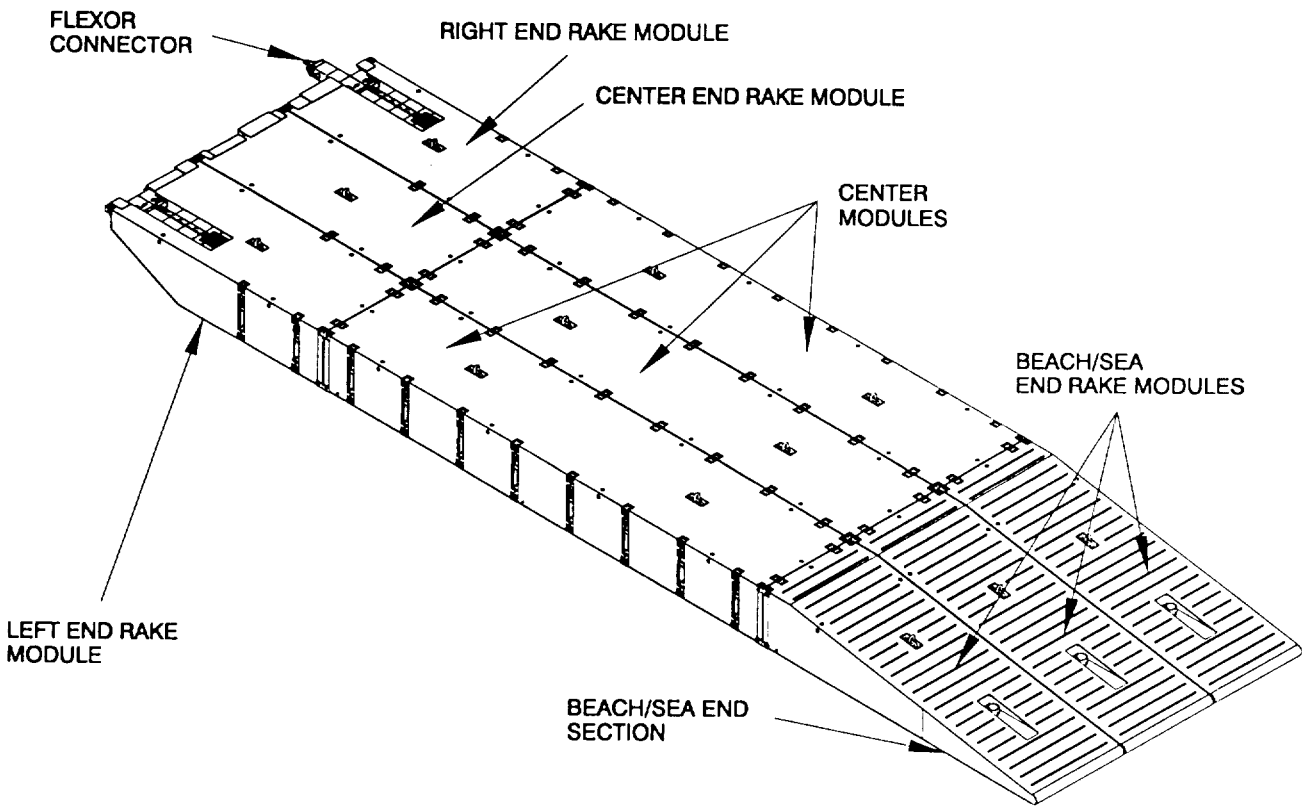

Figure 1-17. Combination Beach/Sea End Section.

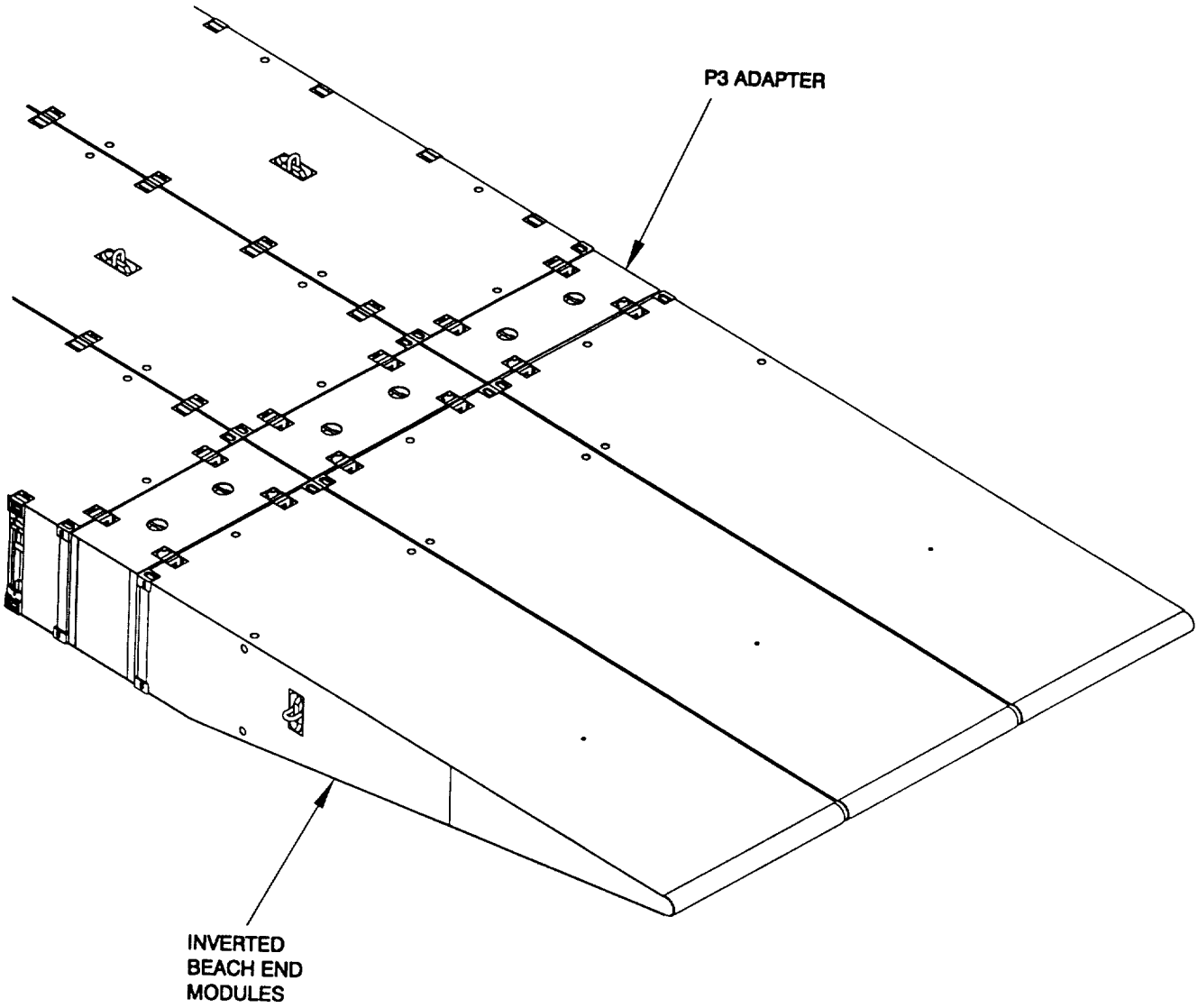

Figure 1-18. Combination Beach/Sea End Section Alternate Configuration.

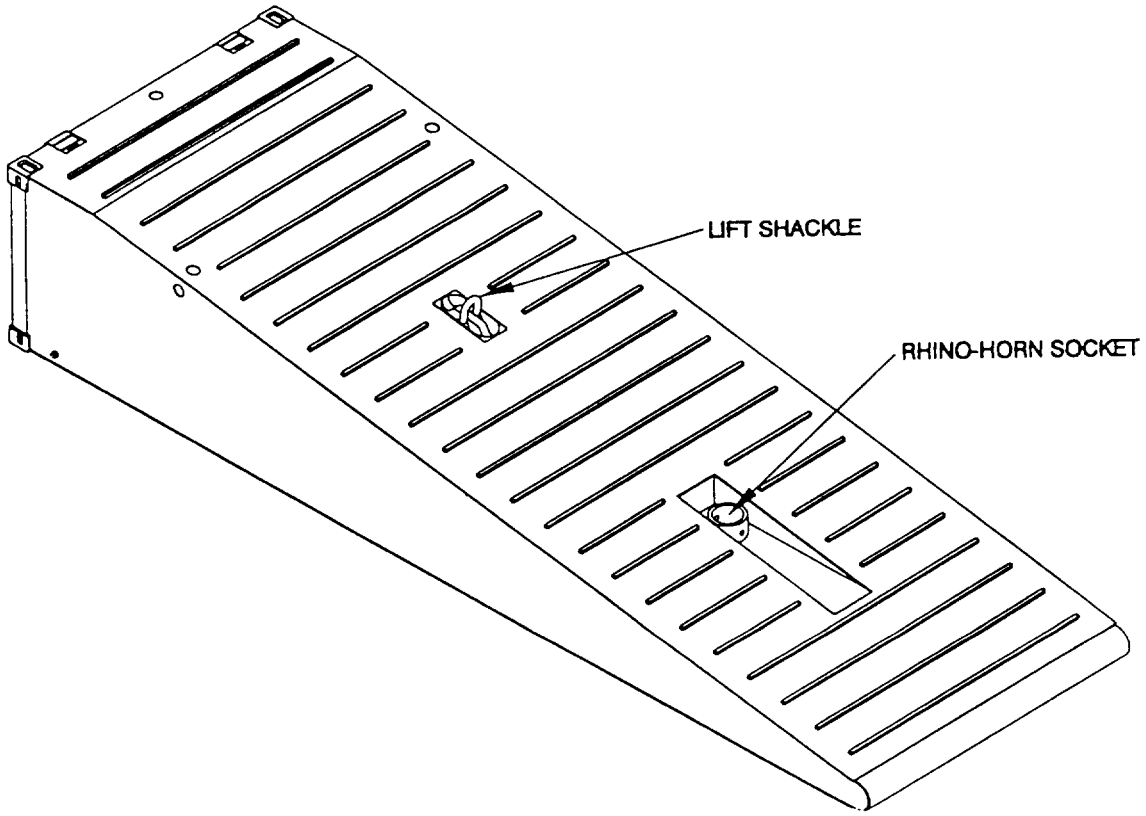

Figure 1-19. Beach/Sea End Module.

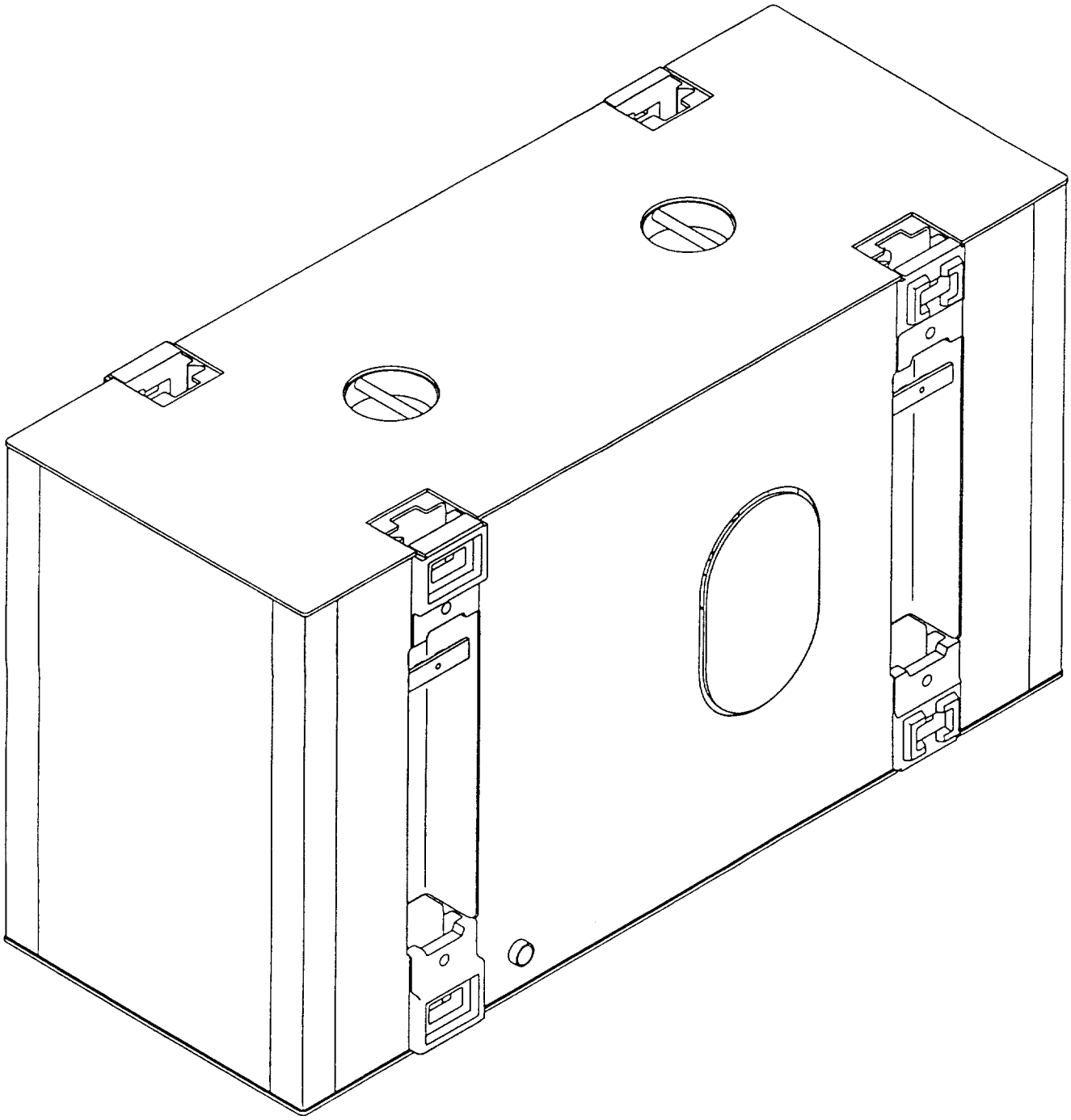

Figure 1-20. P-3 Adaptor Assembly.

1-12.5 Deck Fittings. MCF assemblies are provided with deck fittings (Figure 1-21) to meet various operational needs. Available fittings include Deck Cleats, and a combination Cloverleaf/D-Ring. These fittings have a 30,000 pound load capacity. There are 10 tube turns per non-powered module and 5 per End Rake. The MCF modules are provided with recessed lift shackles welded into the deck structure. Shackles have a safe working load capacity of 35 tons. There are two shackles per Center and Propulsion Module and one per End Rake. When stowed, the shackles fold down flush with deck. The Rhino Horn is used when the MCF needs to be mated to Army/Navy lighters.

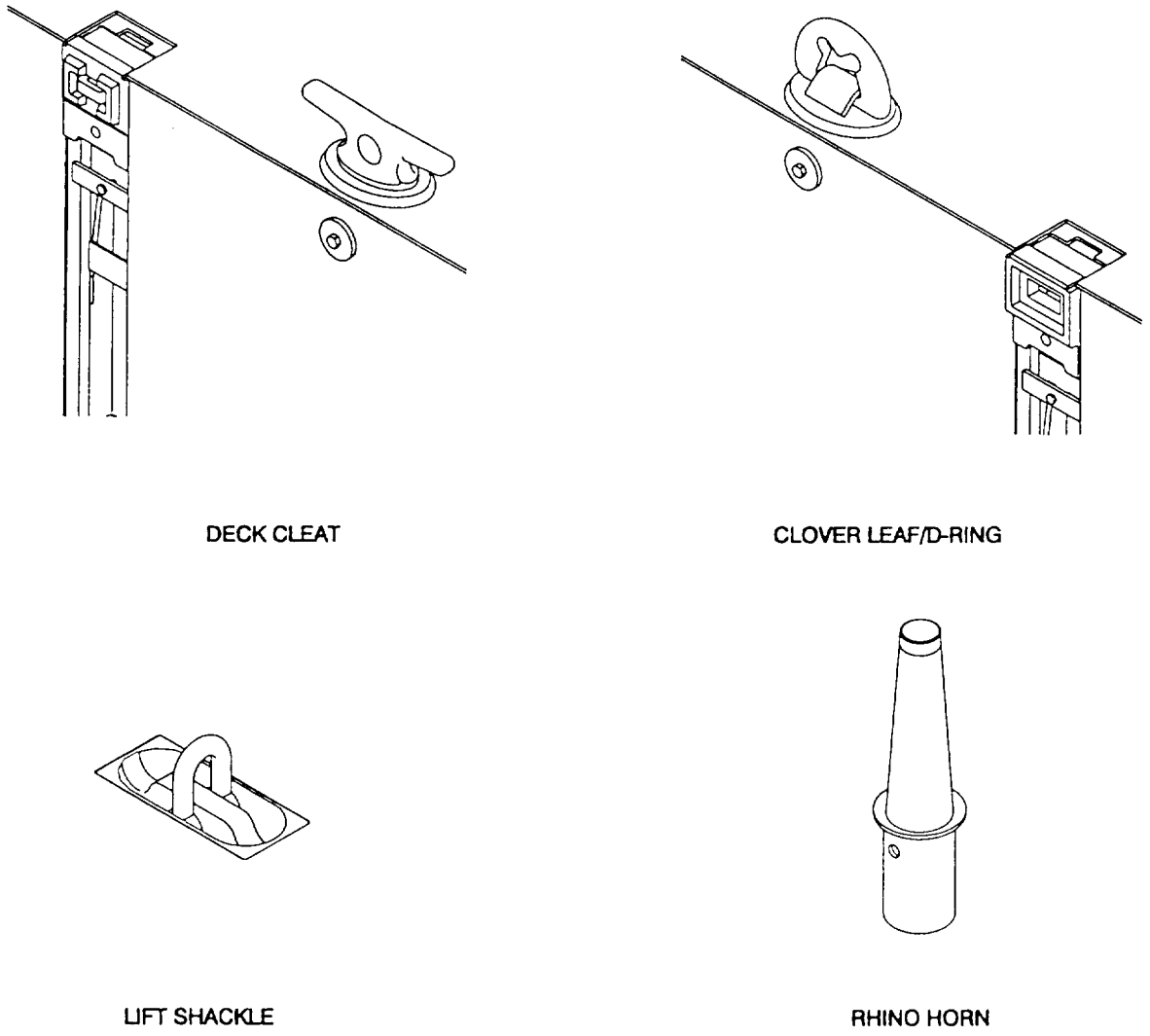

Figure 1-21. Deck Fittings.

1-13 EQUIPMENT DATA. The following tables are to be used by the operator to recap data applicable down to major component levels.

a. Table 1-1. MCF System.

b. Table 1-2. MCF Powered Section.

c. Table 1-3. MCF Intermediate Section.

d. Table 1-4. MCF Beach/Sea End Section.

e. Table 1-5. MCF P3 Adapter.

Table 1-1. MCF System.

Item Characteristic	Description
READY FOR TRAVEL	
LENGTH	328 FEET 2 INCHES WITH P3 ADAPTOR
BEAM	24 FEET
DEPTH	4 FEET 6 INCHES
FREEBOARD (Unloaded)	40 +/- 2 INCHES
FREEBOARD (Loaded)	12 +/- 2 INCHES
WEIGHT (Unloaded)	226 TONS
WEIGHT (Fully Loaded)	576 TONS
MAXIMUM SPEED	6 KNOTS, SEA STATE 2
Capacities	
CARGO	350 SHORT TONS
FUEL TANK (EACH)	400 GALS
AVERAGE OPERATING TIME FOR ONE FULL FUEL TANK	10 HOURS
PUMP-JET ASSEMBLY	5000 LBS HORIZONTAL THRUST AT SHIP'S SPEED OF 6 KNOTS

Table 1-2. MCF Powered Section.	
Item Characteristic	**Description**
LENGTH	80 FEET
BEAM	24 FEET
DEPTH	4 FEET 6 INCHES
FREEBOARD (Unloaded)	40 +/- 2 INCHES
FREEBOARD (Loaded)	12 +/- 2 INCHES
WEIGHT	86.0 TONS DRY, 87.9 TONS WET
ISO COMPATIBLE	YES
SEA STATE OPERATION	SS2
ENGINE (2 per Section)	DETROIT DIESEL 8V92TA
RATED HORSE POWER (EACH)	600 HP AT 2100 RPM AT OUTPUT SHAFT
STARTING SYSTEM	ELECTRIC (24 VOLT)
FUEL CAPACITY	800 GALLONS
MARINE GEAR	TWIN DISC MODEL DD-5111V
PUMP-JET (2 per Section)	SCHOTTEL MODEL SPJ-82-T
PUMP-JET OUTPUT (EACH)	5000 LBS HORIZONTAL THRUST AT SHIP'S SPEED OF 6 KNOTS
STEERING	360°
TOTAL THRUST	10,000 POUNDS AT 2100 ENGINE RPM
ELECTRICAL SYSTEM	24 VOLT 65 AMPS
BILGE PUMPS	12 EACH AT 3,700 GPH
FIRE SUPPRESSION SYSTEM	MANUALLY ACTIVATED CO_2

Table 1-3. MCF Intermediate Section.	
Item Characteristic	**Description**
LENGTH	80 FEET
BEAM	24 FEET
DEPTH	4 FEET 6 INCHES
FREEBOARD (Unloaded)	40 +/- 2 INCHES
FREEBOARD (Loaded)	12 +/- 2 INCHES
WEIGHT	67.5 TONS
ISO COMPATIBLE	YES
SEA STATE OPERATION	2

Table 1-4. MCF Beach/Sea End Section.	
Item Characteristic	**Description**
LENGTH	85 FEET
BEAM	24 FEET
DEPTH	4 FEET 6 INCHES
FREEBOARD (Unloaded)	40 +/- 2 INCHES
FREEBOARD (Loaded)	12 +/- 2 INCHES
WEIGHT	71.0 TONS
ISO COMPATIBLE	NO
SEA STATE OPERATION	2

Table 1-5. P-3 Adapter Assembly.	
Item Characteristic	**Description**
LENGTH	3 FEET 2 INCHES
BEAM	8 FEET
DEPTH	4 FEET 6 INCHES
WEIGHT	5.0 TONS
ISO COMPATIBLE	NO
SEA STATE OPERATION	2

Section III. Principles of Operation.

1-14 MCF. Operation of the MCF revolves around the diesel engine (power) and the pump-jet (movement and direction). When the diesel engine is running, the marine gear engages the transfer case into gear, which changes the engine speed to shaft speed. Seawater is brought into the pump-jet through the inlet grating at relative low velocity in order to minimize the ingesting of debris. Seawater travels through the heliconic converter at high head and moderate velocity thus reducing the losses due to turbulent flow. Seawater then flows through the discharge port which contains a hydraulically actuated specially designed steering nozzle. The accelerated water mass provides a reactive force acting on the vessel's hull. Direction is controlled by rotation of the steering nozzle. Thrust is increased or decreased by varying the speed of the diesel engine. Control and indication necessary to operate the pump-jet are located in the operator's cab. Chapter 2 contains detailed information on the controls and indicators. The following paragraphs provide the technical principles of operation of the MCF subsystems.

1-14.1 Drive Train. The drive train (Figure 1-22) consists of the engine, marine gear, transfer case and pump-jet. Guarded drive shafts connect the marine gear to the transfer case and the transfer case to the pump-jet.

a. Engine. 8 cylinder, water cooled, turbo charged, after-cooled diesel marine engine, delivering 600 hp at 2100 rpm, with all operator control of the engine accomplished from the operator's cab.

b. Marine Gear. Mounted directly to the flywheel housing of the diesel engine, the marine gear provides the capability to reverse the directional rotation of the other drive train components making it possible to back flush the pump-jet. The transmission is equipped with an integral hydraulic system consisting of a pump, a shifting valve and internal hydraulic cylinders. The pump utilizes the transmission lubricating oil to operate hydraulic cylinders which shift the gearing into the backflush, neutral or engaged configurations. The shifting valve is solenoid (L2 and L3) actuated from a toggle control switch in the operator's cab. In addition to powering the shifting cylinders, the pump also circulates the case oil though an oil cooler that is plumbed into the engine raw water cooling system.

c. Transfer Case. The transfer case compensates for off set alignment between the output flange of the marine gear and the input flange of the pump-jet. It has a 1 to 1 gear ratio utilizing spur gears throughout and is equipped with an oil pump that circulates lubricating oil from its gear case though an oil cooler plumbed off of the engine raw water cooling system and back to the top of the transfer case to lubricate the upper gearing. The transfer case is connected to the marine gear and the pump-jet via drive shafts.

d. Pump-Jet. Each propulsion module is equipped with a 360° continuous, steerable, pump-jet propulsion unit capable of delivering 5,000 lbs. of thrust . The pump-jet works on the principle of a rotary pump and consists of a drive shaft driven upper gearbox assembly driving an impeller. Water is sucked into the pump-jet through a feeding funnel on the bottom of the module, is fed into the enclosing pressure casing, whose bottom plate is provided with three systematically arranged outlet nozzles from which water is ejected (angle 13°). A hydraulic steering motor drives a spur gear through a planetary gearbox to rotate the pressure casing and bottom plate (steering nozzles) in both senses of rotation without limitation. A second planetary gearbox is provided to facilitate emergency steering. (An emergency steering control stand mounts above deck and interfaces with the through shaft of the planetary gearbox.) The emergency steering gearbox contains a spring set, hydraulically released disc brake. The brake maintains the position of the steering nozzle until rotation is called for by the operator. In the case of hydraulic system failure the brake can be released via the hydraulic hand pump, to facilitate emergency steering. An electromechanical feedback unit monitors relative steering position of the steering nozzle and transmits that position to a dial indicator in the operator's cab. An electric sensor monitors the oil level in the upper gearbox and sends a signal to an indicating light in the operator's cab when the oil level is below the required level.

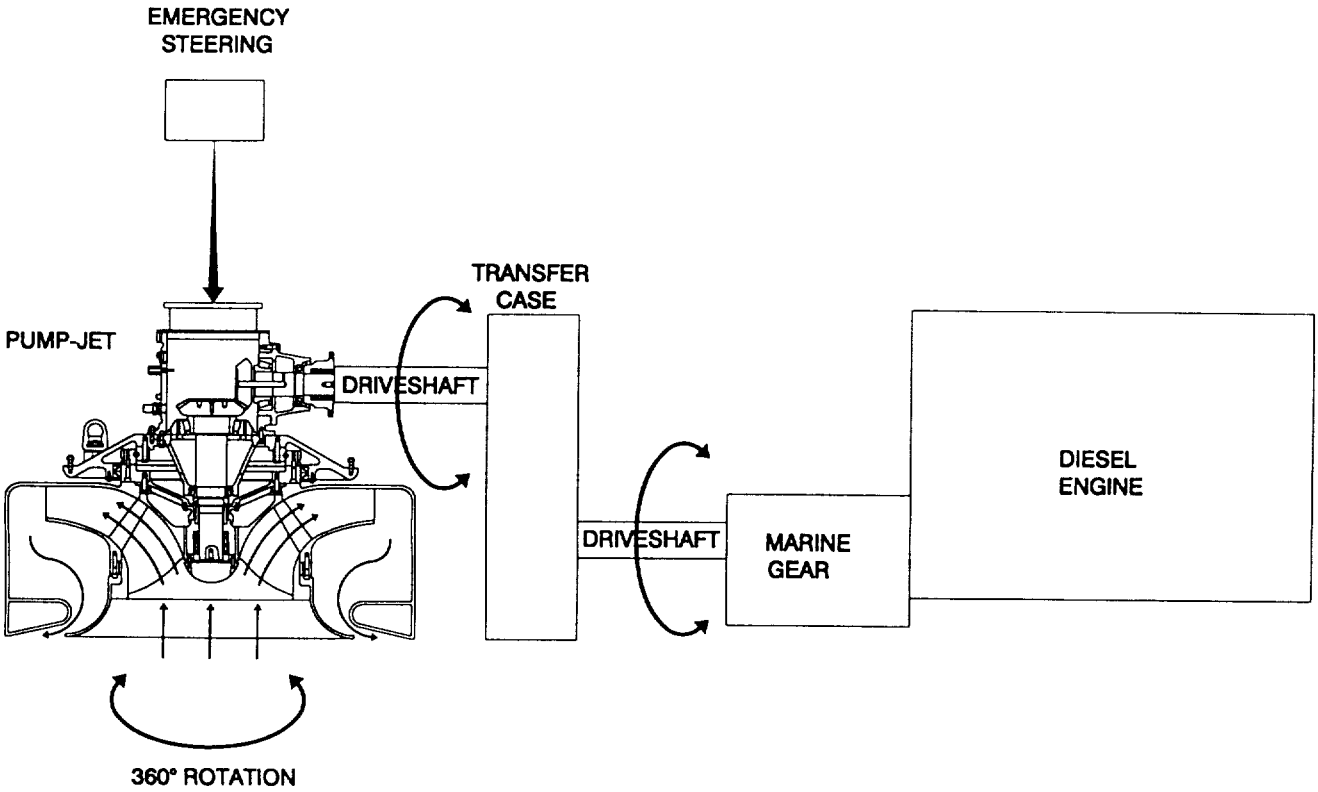

Figure 1-22. Drive Train

1-14.2 Cooling and Exhaust. The engine cooling and exhaust system (Figure 1-23) consists of the sea chest (raw water inlet integral with the structure of the module), a butterfly valve, a duplex strainer, the engine raw water pump, intercoolers, the fuel cooler, the engine coolant heat exchanger, the marine gear oil cooler, the exhaust water shut-off valve, the transfer case oil cooler, the water cooled muffler and exhaust flappers. The water cooling system dissipates heat generated by the diesel engine, engine exhaust, marine gear and transfer case. This is accomplished by circulating raw (sea) water through the engine, engine heat exchanger, marine gear oil cooler, muffler and transfer case oil cooler. The system is an open loop, drawing naturally cool sea water in one side and discharging heated sea water out of the other in a continuous cycle. The process requires the interaction of five subsystems:

a. Raw Water (Sea Water) Subsystem. An engine driven raw water pump draws sea water from the sea chest in the bottom of the hull through a duplex strainer to a heat exchanger at the front of the engine. A fuel cooler is located in the raw water system between the raw water pump and the heat exchanger. Fresh water (ethylene glycol) cooling lines are passed through the heat exchanger. The raw water circulates around the engine coolant lines, lowering the temperature of the ethylene glycol coolant. Raw water exiting the heat exchanger is channeled through the marine gear oil cooler. Lubricating oil lines from the marine gear are passed through the oil cooler to cool the oil and return it to the marine gear. Raw water leaving the marine gear oil cooler is then channeled in two directions. A portion of the water is piped into the exhaust inlets to the muffler, cooling the muffler and exiting the module via the thru hull assembly. The remaining water is piped through the transfer case lube oil cooler and exits the module via an outlet port.

b. Fresh Water (Ethylene Glycol) Subsystem. Coolant is drawn by the engine water pump from the heat exchanger and is forced through the engine lube oil cooler, cylinder block, cylinder heads and exhaust manifolds to the thermostat housings. A bypass from the thermostat housings to the inlet side of the water pump permits circulation of coolant through the engine when thermostats are closed. When the thermostats are open, the coolant flows through the heat exchanger where it is cooled. Thermostats control and regulate the flow of coolant within the fresh water cooling system to control engine temperature.

c. Marine Gear Oil Cooler. Raw water exiting the engine heat exchanger passes through the marine gear lube oil cooler. A gear pump integral to the marine gear circulates case oil from the marine gear through external lines to a heat exchanger type oil cooler and back to the transmission. Sea water passing through the oil cooler is circulated around the heat exchanger, lowering the temperature of the lube oil. The bearings, clutches and gears are lubricated and cooled by the returning lube oil.

d. Water Cooled Muffler. A normally open ball valve allows raw water exiting the marine gear oil cooler to be pumped into the exhaust system between the turbo chargers and the muffler, filling the muffler with water and cooling it prior to being expelled through the exhaust flapper port with the engine exhaust fumes. In addition to cooling the muffler, the water also acts as a noise dampening media within the muffler itself.

e. Transfer Case Lube Oil Cooler. A normally open ball valve allows raw water exiting the marine gear oil cooler to be pumped through the transfer case oil cooler. A gear driven pump operated by rotation of the transfer case gearing circulates lube oil from the transfer case through external lines to the heat exchanger type transfer case lube oil cooler and back to the transfer case. Sea water passing through the heat exchanger cools the lube oil. The cooled oil is returned to the top of the transfer case, lubricating the upper gears and bearings and cooling the unit simultaneously.

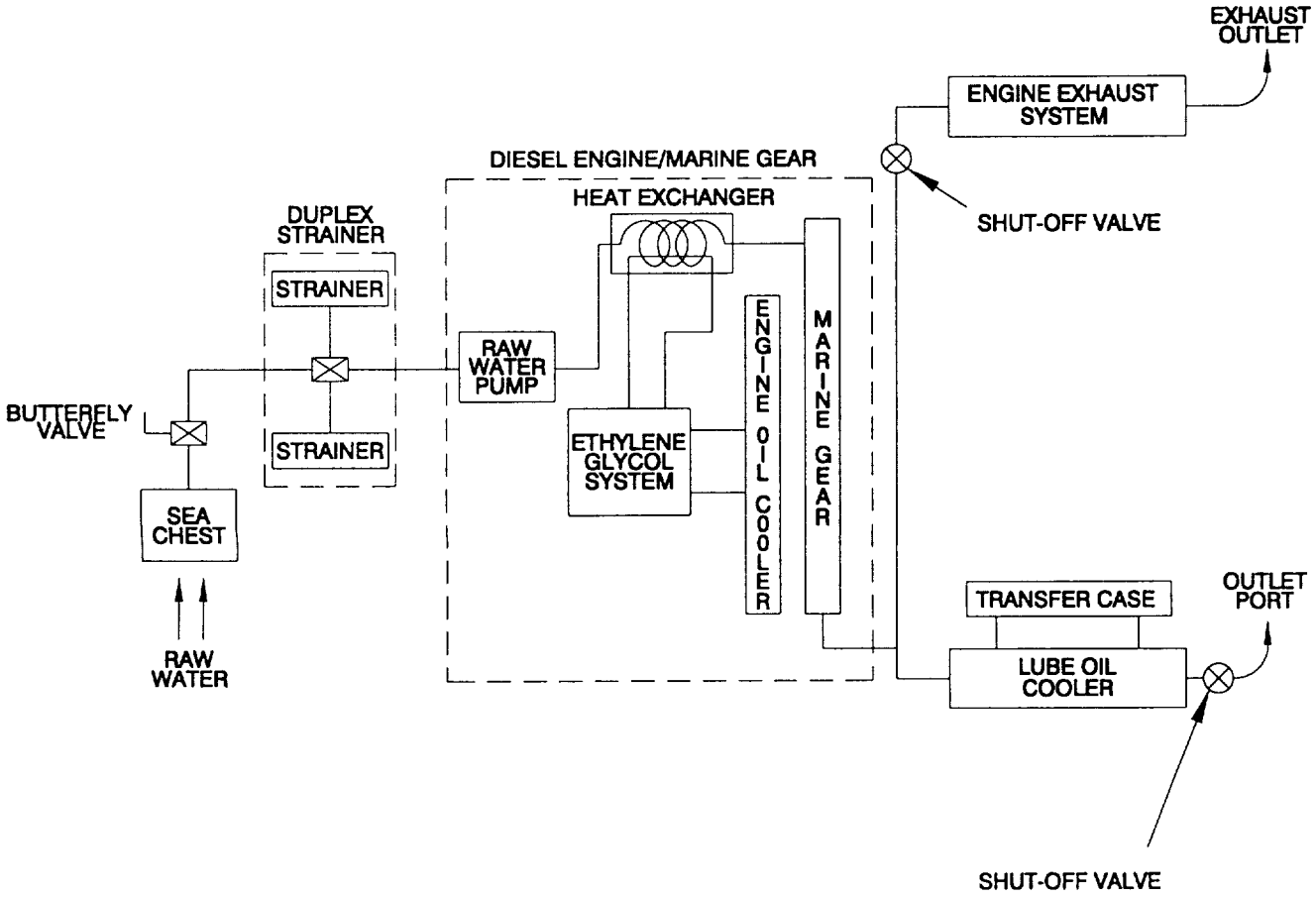

Figure 1-23. Cooling System Schematic Diagram

1-14.3 Fuel System. The fuel system (Figure 1-24) provides a filtered fuel supply to the diesel engine and is identical for Port and Starboard Propulsion Modules. A fabricated steel fuel tank stores 400 gallons of diesel fuel. The level of fuel in the tank can be viewed through a sight gauge located on the side of the tank. Fuel is added to the tank through a filler neck and filtered through a 60 x 60 mesh strainer and plug, located on top of the tank. The filler neck is accessible from the deck of the Propulsion Module through an 8" hatch. During refueling, air is vented from the tank through a check valve. Another check valve allows air to be drawn into the fuel tank as fuel is consumed. Fuel supply and return lines are sized to reduce fuel line pressures. During operation, fuel flows out of the tank through a 1" diameter fuel supply line to a fuel/water separator to remove water (condensation or other moisture) from the fuel. Fuel then travels through the supply line and is drawn through a 10 micron fuel strainer on the engine before entering the inlet side of the fuel pump. Leaving the fuel pump under pressure, the fuel is forced through a fuel filter and into the inlet fuel manifold, then through the fuel pipes to the inlet side of the fuel injectors. Surplus fuel returns from the outlet side of the fuel injectors to the fuel return manifold and then back to the fuel tank through .75" diameter fuel return line. A fitting in the fuel outlet manifold in one of the cylinder heads maintains fuel system pressure. A check valve in the supply line prevents fuel from draining back to the tank when the engine is not running. Ball valves are provided on the supply and return lines to shut off the flow of fuel during maintenance and when the MCF is not in operation.

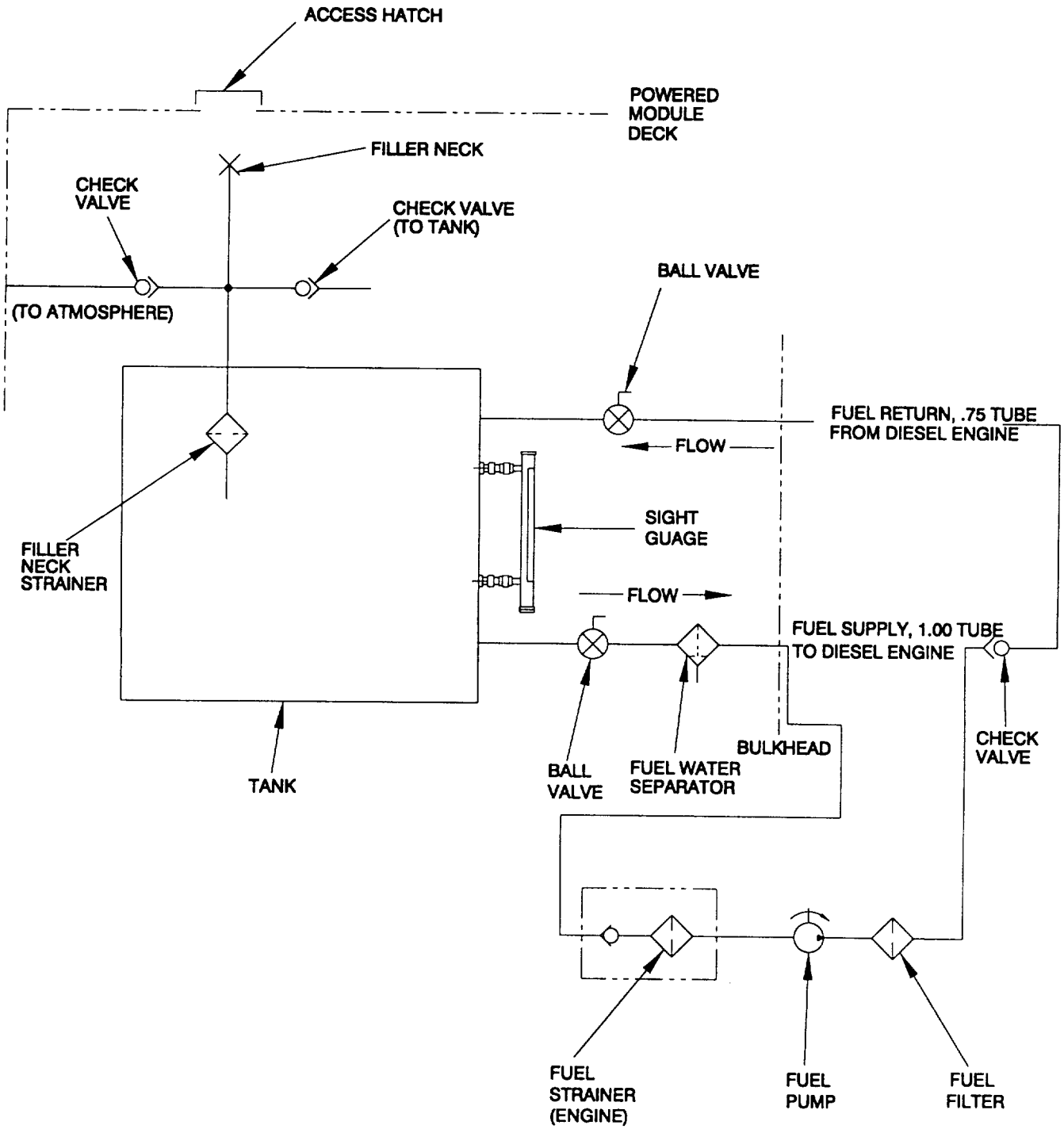

Figure 1-24. Fuel System Schematic Diagram.

1-14.4 Ventilation System. The ventilation system (Figure 1-25) draws outside air and directs it below deck around the engine and other propulsion module components, removing heat and toxic fumes aft to be expelled to the atmosphere through the exhaust plenums. In addition, the intake plenum flapper door closes when the fire suppression system is activated, shutting off the supply of air to the machinery compartment. A secondary purpose of the system is to provide service access to the components below deck through large, removable deck covers. The MCF ventilation system is comprised of the following components and operating mechanisms:

a. Air Intake Plenum. The air intake plenum accepts outside air and directs it below deck to the machinery compartment. It is mounted on the engine hatch of the powered module facing forward. The plenum may be located on either port or starboard side, depending on placement of the operator's cab for that section. An air intake plenum is built into the front of the operator's cab. The intake plenums also include the conduit entry plates for the electrical interconnect when the propulsion modules are assembled into a powered section.

b. Air Intake Plenum Flapper Door (Damper). The air intake plenum contains a flapper door which works in conjunction with the fire suppression system. A wire rope, attached to the flapper door within the intake plenum, is released when the fire suppression system is activated. This allows the flapper door to fall due to its own weight and rotate about 45° downward, closing the door and preventing oxygen from feeding a fire within the machinery compartment of the propulsion module.

c. Ventilation Fan (Exhaust Fan). An ventilation fan draws hot fumes from below deck within the machinery compartment of the propulsion module. The blower moves air through the exhaust plenum at 3075 cubic feet per minute. It removes heat from the engine, pump-jet and drive train components, forcing the hot fumes above deck and expelling them to the atmosphere. The marine duty, 18" inner diameter, ventilation fan (vent fan) has a cast aluminum alloy fan and is located at the intake side of the exhaust plenum. The blower has a 3/4 HP, 24 VDC motor and runs at 1750 RPM. Under normal operating conditions the blower is controlled from a toggle switch located in the operators cab. If the fire suppression system is activated, power to the blower is disconnected automatically.

d. Exhaust Plenum. A welded metal structure, the exhaust plenum contains an ventilation fan and a flapper door. It provides ventilation for the machinery compartment of the propulsion module . An ventilation fan (exhaust fan) at the intake end of the plenum draws air from below deck, creating a vacuum which draws air through the Intake Plenum and expels hot, toxic fumes to the atmosphere.

e. Exhaust Plenum Flapper Door (Damper). A hinged flapper is housed within the plenum. It is manually opened and closed. If the fire suppression system is activated, the flapper has to be closed manually, eliminating a second source of air to any fire below deck.

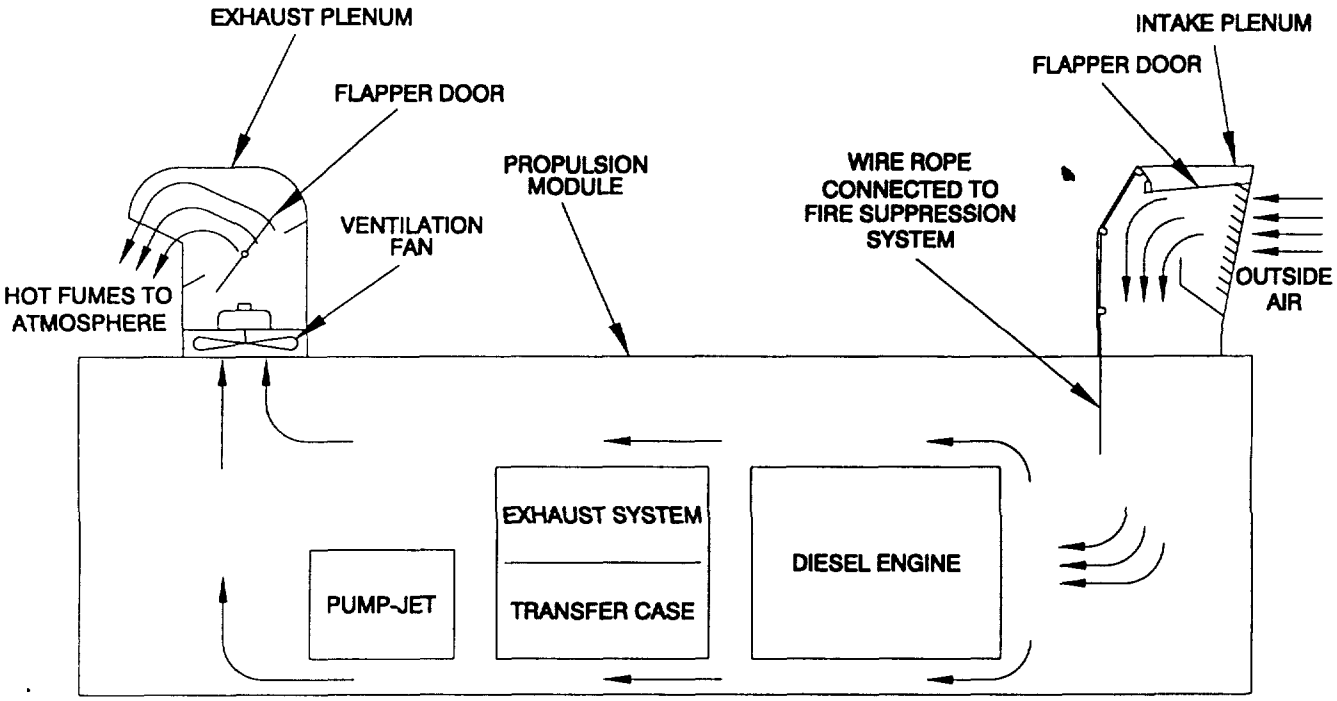

Figure 1-25. Ventilation System Functional Diagram

1-15 MCF ELECTRICAL SYSTEM. The MCF propulsion units are supplied with a 24 VDC main power source (Figures 1-26 and 1-27). This provides power to the engine starter solenoid and the operating systems. The main power source is charged from the engine regulator/alternator system via the isolation diode. The propulsion units are also equipped with an auxiliary 24 VDC power supply that is used to operate the Pump-Jet/Thruster indicator directional system. The auxiliary battery units are also charged from the engine regulator/alternator via the isolation diode. The auxiliary battery system provides power in case the main 24 VDC power source fails. The main power source provides power to the main circuit breaker panel for distribution to the operating systems. The power cables feed from the propulsion module through the electrical interconnection box up to the cab.

1-15.1 Ventilation. Both port and starboard units are equipped with a ventilation system. This system circulates outside air from the intake plenum through the engine compartment and out the exhaust plenum. The ventilation system is operated by a blower equipped with a 3/4 hp, 24 VDC motor. The unit is powered by the 24 VDC main power system, main circuit breaker, CO2 pressure switch, operator switch, A8K1 relay.

1-15.2 Bilge Flood Warning and Control System (Port or Starboard). Is powered by the main 24 VDC power source. The power is fed through the main breaker panel to the bilge pump control panel AS up to the cab control. The float switches provide the signal to the cab control that allows the operator to hear the alarm and check the red activated indicator(s) for location of flooding. The alarm silence switch should be activated. At which time the pump run switch provides power to the pump start relay contacts that in turn start the pump and activates the green indicating lamp.

1-15.3 Communications.

a. SINCGARS Radio Transmitter. The SINCGARS radio receives 24 VDC power from the main power system via the cab circuit breaker panel. The signal output of the transmitter is generated from the outdoor antenna.

b. ROSS VHF-FM Radio Transmitter. The Ross radio receives 12 VDC power from the main power system via the 24 VDC/12 VDC voltage converter, this circuit is protected by an inline 10 amp fuse that is fed through a ferrite line interference conditioner from the cab circuit breaker panel. The signal output of the transmitter is generated from the transmitter antenna.

c. TRITON VHF-FM Portable Radio Transmitter. The TRITON VHF-FM radio receives its power from self-contained 12 VDC battery pack that is charged by a battery charger located in the cab. The signal output of the transmitter is generated by a self contained antenna.

d. Portable Radio Battery Charger. The battery charger receives 24 VDC from the main power source via the cab circuit breaker panel. The charger has a built-in voltage regulator that converts 24 VDC to 12 VDC for charging the TRITON portable radio transmitter.

1-15.4 Navigation System.

a. Navigation Lights. Main mast and stub mast navigation lights receive power from the main power source 24 VDC via the cab circuit breaker panel through the cabs mast enclosure assembly. The enclosure contains the switches , warning lights, and alarm system for controlling the main mast and stub mast lights.

b. Horn. The outside horn receives its power from the panel switch via the main power source 24 VDC and the cabs circuit breaker panel.

c. Compass. The compass contains an operation light that is powered from the panel light dimmer switch fed by the cab circuit breaker panel.

d. Spotlight. The spotlight is powered from the main 24 VDC power source via the operator's cab circuit breaker panel and the operator's control switch.

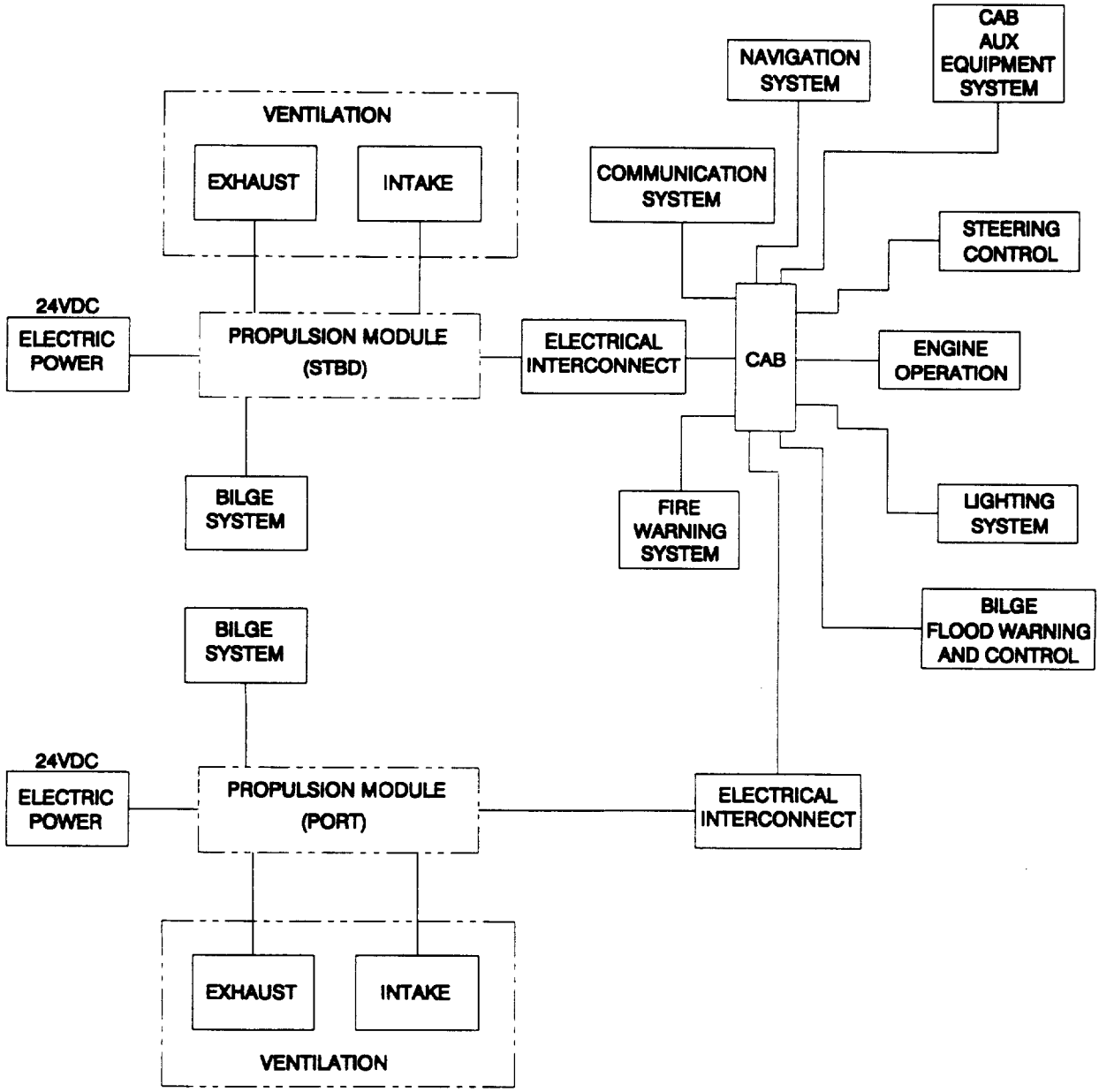

Figure 1-26. MCF Electrical Block Diagram

1-15.5 Engine Operation (Port or Starboard). The engine receives its power from the main 24 VDC power source that operates the engine starter motor, starter contact B1 and engine starter solenoids L3 which is activated by a K1 relay - operator control. A cold weather temperature switch/solenoid that in turn injects ether into the piston chambers for starting during cold weather operation. In case of extreme cold weather starting condition. The engine power system is equipped with a NATO jumper cable receptacle. The engine contains the following operation switches of sending units that provide signals to the operator's control.

a. Fuel Oil Pressure Switches (S3 & S4). Pressure switches that provide information to the operator's console for starting or stopping of the engine.

b. Low Oil Pressure Switch. Provides a signal to the operator's console to activate the K2 relay that in-turn activates the engine alarm bell and light.

c. High Water Temp Switch. Provides a signal to the operators console to activate the K2 relay that in turn activates the engine alarm bell and light.

d. Water Temp Sending Unit. Provides a signal to the operator's console for engine water temperature read-out.

e. Oil Temp Sending Unit. Provides a signal to the operator's console for engine oil temperature readout.

f. Oil Pressure Sending Unit. Provides a signal to the operator's console for engine oil pressure readout.

g. Engine Normal Stop Pushbuttons. Disconnects 24 VDC signal to the governor controller that will stop the engine under normal conditions.

h. Engine Hour Meter. This meter receives its power from the main 24 VDC power system and is energized when the fuel oil pressure switch is closed and the engine power switch is turned on and the circuit breaker switch is activated.

1-15.6 Engine Alternator. Provides power to recharge the main battery and auxiliary battery systems. It is controlled by the A9VR1 voltage regulator and distributed through the isolation diode A91S1. The alternator also provides a signal to the operator's console for the engine RPM/tachometer readout. The operator's console ammeter(s) indicate the system batteries charge and discharge in amps.

1-15.7 Electronic Speed Switch. Provides a signal to the system via the engine magnetic pick-up. This system activates the emergency stop circuit by energizing the air flap solenoid, tripping the air flap closed when the engine RPM exceeds 2300 RPM. The power source is 24VDC main supply operated through the fuel oil pressure switch from the main breaker.

1-15.8 Engine Governor. Provides a minimum/maximum speed range (800 - 2100 RPM) for engine normal operation. This unit receives its power from the main 24 VDC supply through the engine power switch (operators console) and main circuit breaker panel.

1-15.9 Operator Engine Control, Alarms and Indicator System. The following items extend the engine system for engine operation.

a. Engine Gauges. The gauges receive their signals from the engine and are powered from the fuel oil pressure switch via the main breaker panel and the engine power switch.

b. Engine Gauges Test Switches. Provide power from main circuit breaker to the power side of the gauges to activate them during test prior to start-up.

c. Engine Power Switches. Provides power from the main circuit breaker panel to the engine starting, stopping, and fuel oil pressure switch for gauge operation.

d. Engine Start Switches. Provides power to the engine start relay A1K1 from the main breaker panel through the engine power switch through the clutch deenergized normally closed relay. If clutch switch is in engaged forward or backflush position, the engine will not start, it must be disengaged.

e. Engine Alarm Warning/Indicating System. Upon receiving an alarm from the port or starboard engine high water temp or low oil pressure, an indicating light and bell is activated. At this point, the alarm/silence/test switch can be actuated.

f. Alarm/Silence/Test Switch. The switch when moved from the alarm to the silence position cuts power to the bell A4LS1 and provides power to the indicating light. When the alarm condition has cleared the indicating light will go out and the switch can be moved back to the alarm position. The test position will provide power a to the bell and the indicating light via the cab breaker panel. This test position is a momentary contact.

g. Engine Throttle Control. Provides a signal to the engine governor that tells the engine to speed up or to slow down. The power source for this control comes from the governor.

h. Marine Gear (Forward/Disengaged/Backflush). Provides power to shift the gear solenoids. This power comes from the main breaker panel and activates the forward solenoid or backflush solenoid and the A4K2 Port/A4K3 Starboard relay that in turn activates an indicating light. When the clutch is left in the forward or backflush position when the engine stops and the system is shut down, the engine starting system will not work because the clutch relay contacts provided in the starting circuit will be open and the engine will not start.

1-15.10 Lighting System.

a. Operator Stations. Middle and lower control panel lights are operated from the main 24 VDC power source and through the cab circuit breaker panel. The lights are activated by their switch control sources and controller by a dimmer switch. The operation lights used for the gauges are red and require no dimming effect. The operation lights are powered from the same circuit except don't go through the dimmer switch.

b. Cab Spotlight. Is powered from the main 24 VDC power source via the operator cab circuit breaker panel and the operator's control switch. Used for deck night work and navigation buoy night identification.

c. Battle Lanterns. Battle lanterns are powered by 6 VDC batteries. Cab light is red lens and below deck lights are white lens.

1-15.11 Steering (Port and Starboard) Systems.

a. Pump-jet/Thruster Directional Control. Manually controlled joysticks on the Operator's Console receive power from the main 24 VDC power source to direct port and starboard pump-jet/thrusters. The joysticks move forward and backward only. The system is controlled from the main breaker panel through the thruster junction box breaker which operates the clockwise and counter clockwise rotation relays and contacts K1 and K2 that operate the hydraulic power units' thruster solenoids A2JB1-L4 and L5 . The reaction speed of the solenoids are controlled by variable resistors A2JB2-R1 and R2.

b. Pump-Jet/Thruster Directional Indicators. Are powered from the alternator 24VDC and the auxiliary 24 VDC battery supply through propulsion module circuit breaker A6CB14 and activated by A9K1 relay contact which is controlled by the engine starting system. The 24 VDC power to the Pump-Jet/Thruster directional signal and indicator has a line converter that stabilizes the 24 VDC power source. The Pump-Jet/Thruster directional signal comes from the feed back resistor control.

c. Fire Alarm System (Port and Starboard). Is powered from propulsion module circuit breaker A6CB4 24 VDC power source. The circuit is activated by two (2) temperature switches S8 and S9 that sends a signal up to the operator's console and activates the fire alarm horn and warning light. The circuit also has an alarm/silence test switch when moved form the alarm to the silence position cuts power to the alarm horn and provides power to the indicating light. When the alarm condition has cleared the indicating light will go out and the switch can be moved back to the alarm position. The test position will provide power to the horn and indicating light via the cab circuit breaker panel. This test position is a momentary contact.

1-15.12 Cab Auxiliary Systems.

a. Hydraulic Oil Low Level Indicators Port or Starboard Units. The hydraulic tank has a float switch sending unit that provides a signal up to the operators console via the main breaker 24 VDC power source.

b. Pump-jet Gearcase Low Oil Level Indicator. Receives its signal from the oil level sending unit. The 24 VDC power comes from the main breaker panel through the sending unit and activates the low level indicator.

c. Windshield Wiper. The operator's control switch provides power to the wiper motor from the cab circuit breaker panel main 24 VDC power source.

d. Cab Heater. Water, heated by the engine cooling system, is circulated through the cab heater. The operator's control switch low/off/high provides power to the heater blower motor from the 24 VDC main power source through the cab breaker panel. The blower moves the air around the heater coils, heats it, and circulates the hot air through the cab.

e. Window Defroster. Heated air from the engine provides defroster air. The operator's control switch turns 24 VDC power ON or OFF to the blower motor from the cab breaker panel via the main power source.

f. Cab Circuit Breaker Test Panel. The systems power sources and the subsystems DC voltage supplies have test points on this panel that provide output voltage test points that can be monitored by a hand held voltmeter.

1-15.13 Electrical Interconnect System. This cable cross deck connections provide power and signal information between the cab twist lock plug/receptacles and the propulsion module twist lock plug/receptacles.

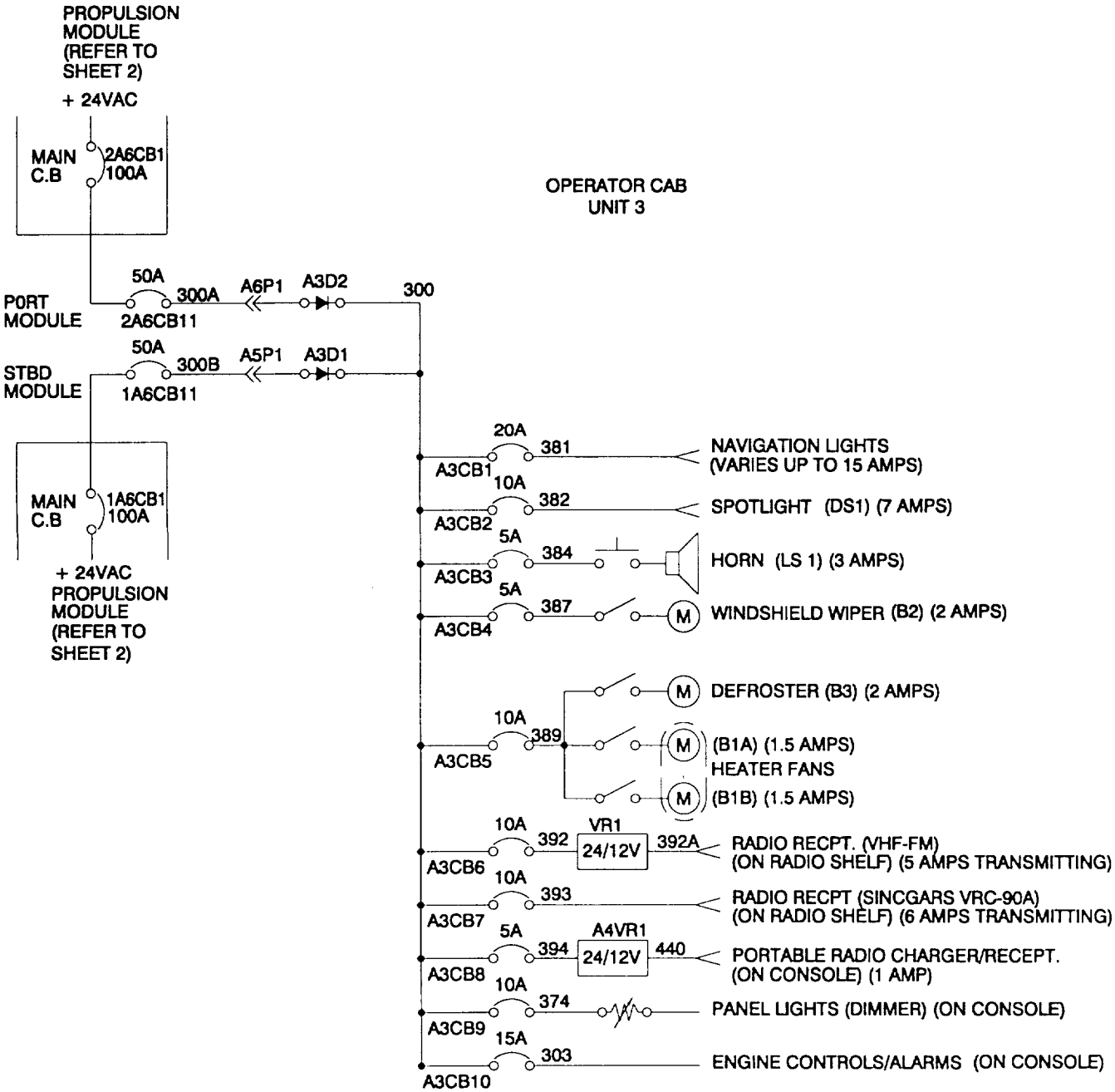

NOTE: ALL INTERNAL HOOK-UP WIRE IS 14 OR 16 AWG
SOME DEVICES ARE PROVIDED WITH PRE-WIRED PIGTAILS FOR CONNECTIONS.

Figure 1-27. Electrical One-Line Diagram (Sheet 1 of 2)

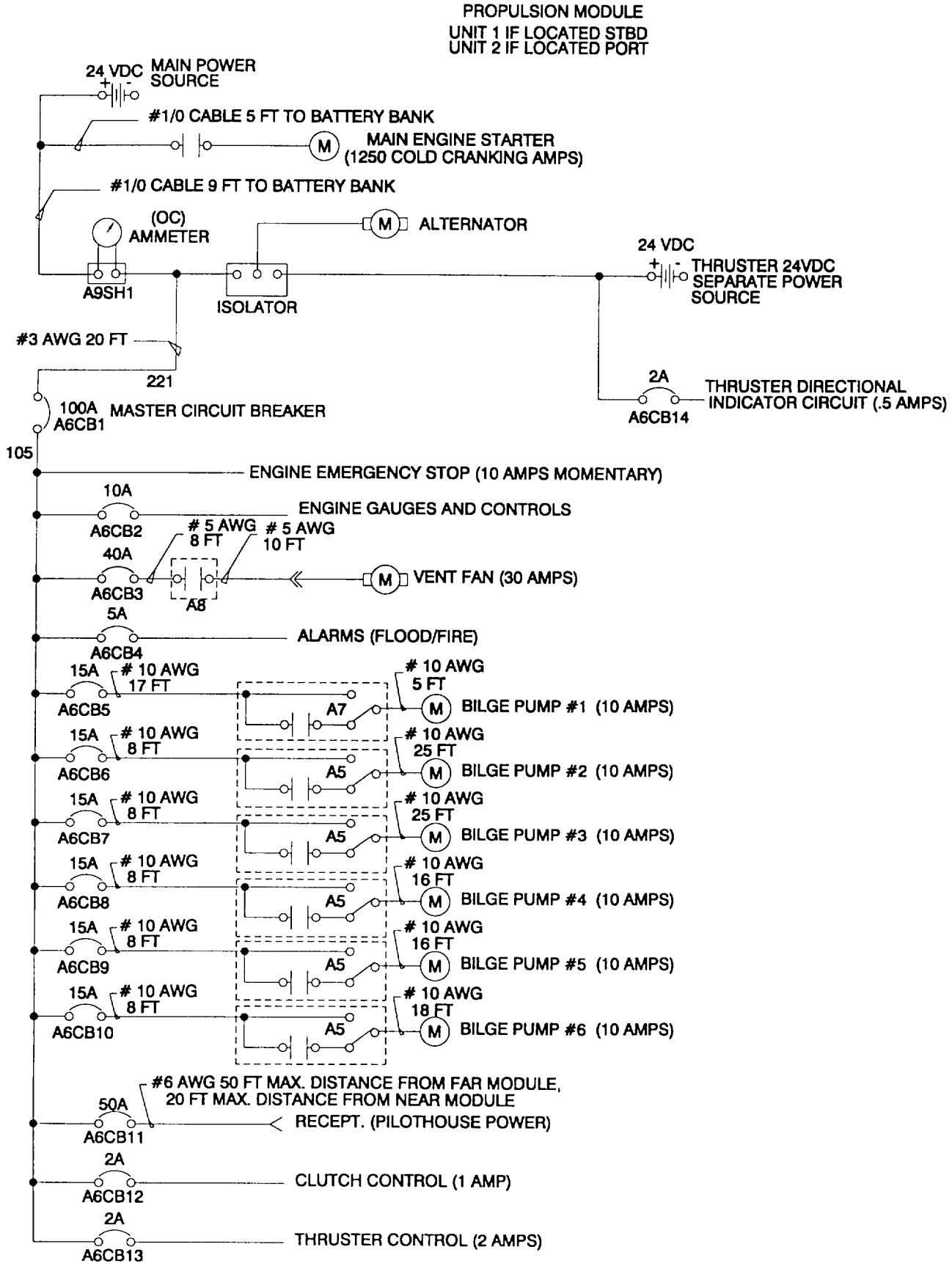

Figure 1-27. Electrical One Line Diagram (Sheet 2 of 2)

1-16 HYDRAULIC SYSTEM (Figure 1-28)

1-16.1 Powered (Normal) Operation. The hydraulic system contained within each propulsion module provides the steering power and control for rotation of the pump-jet discharge nozzle. The four subsystems comprising this system include; 1) the reservoir system that stores, cools and filters the hydraulic fluid being pumped through the system; 2) the pump drive system which provides the power to the steering motor; 3) the way valve assembly which protects the hydraulic system from over pressurization and controls the actuation of the hydraulic steering motor and; 4) the hydraulic steering motor drive system which turns the discharge nozzle through 360 degree continuous rotation in both directions.

1-16.2 Emergency (Manual) Operation. In the event of loss of steering control at the cab due to an electrical failure, the steering system can be manually operated by one of two methods; 1) the use of a manual control lever on the way valve unit and; 2) the fit-up of the emergency steering unit on the auxiliary planetary gearbox with manual release of the hydraulic brake.

1-16.3 Hydraulic Reservoir. In addition to storing the system hydraulic fluid, the hydraulic reservoir also cools 26 gallons of fluid with open air to all sides including top and bottom. It also filters the oil through the suction line strainer, return line filter and filler neck screen. The reservoir is equipped with an external sight level gauge to determine actual fluid level and an in-tank float switch to monitor fluid level within and notify the operator via a indicating light in the cab when it falls below the required level.

1-16.4 Hydraulic Pump. The axial piston hydraulic pump provides the power to drive the hydraulic motor. The pump is driven off the marine gear and is fitted with a flow control regulator. The drive shaft of the hydraulic pump drives a cylinder block, causing the pistons within to move in axial direction. The stroke of the pistons is limited by an internal swash plate, which adjusts around the vertical axis of the input shaft varying the displacement of oil flow infinitely.

1-16.5 Way Valve Assembly. The proportional way valve is controlled by means of the electrically operated proportional pressure valves, or manually by means of the lever on the valve unit. The way valve guides the hydraulic oil via the dual braking valve to the hydraulic motor.

1-16.6 Dual Braking Valve. The dual braking valve (load retaining valve) avoids uncontrolled rotation of the hydraulic motor caused by negative loads and locks the lines to the hydraulic motor tightly when the way valve is in the rest position.

1-16.7 Hydraulic Motor. The hydraulic motor is mounted on the input shaft of the pump-jet steering planetary gearbox. The axial piston motor is a constant speed unit with fixed oblique discs supporting nine pistons configured as a rotor.

1-16.8 Three Way Valve. A manually operated, lever actuated three way valve is positioned to select normal hydraulic operation or to isolate the normal hydraulics so the manual hydraulic hand pump can be used to release the hydraulic brake for emergency steering operation.

1-16.9 Two Way Valve. A two-way (needle) valve in closed position during normal operation must be opened to allow for the manual releasing of the hydraulic brake via the hydraulic hand pump.

1-16.10 Manual Hydraulic Hand Pump. The hydraulic hand pump used to release the hydraulic brake for emergency steering operation is equipped with its own small hydraulic reservoir, pressure relief valve and oil level dipstick.

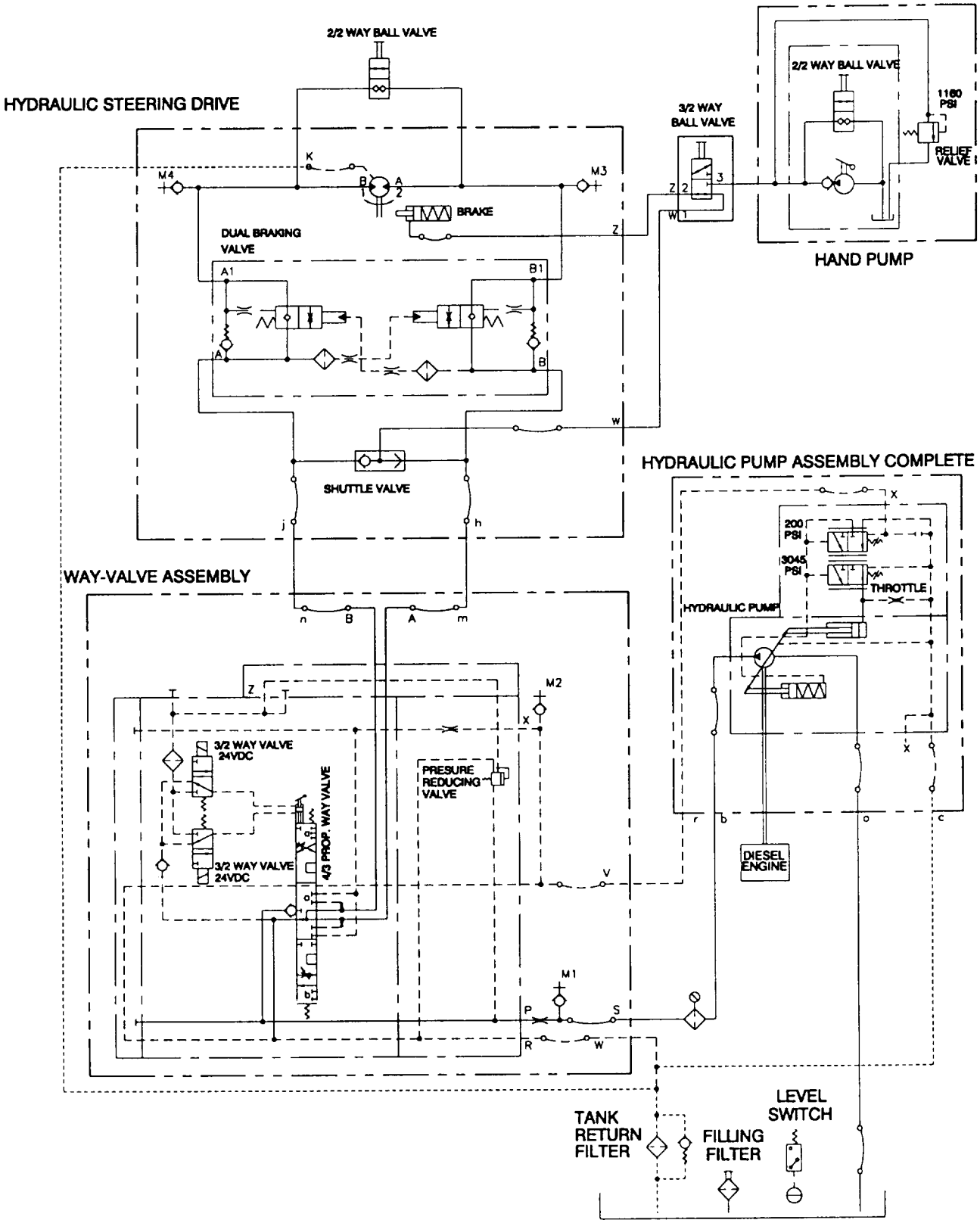

Figure 1-28. Hydraulic System Schematic.

1-17. FIRE SUPPRESSION SYSTEM.

The Fire Suppression System (Figure 1-29) is designed to flood the powered module machinery and fuel storage compartments with Carbon Dioxide (CO_2) if fire breaks out. System activation is accomplished manually using a remote control pull box recessed in the deck directly forward of the operator cab and air intake plenum. Manual activation is also provided below deck, in the lazaret where the agent is stored but not dispersed. The upper 50# $C0_2$ cylinder is equipped with a manual release lever which initiates discharge the same as the remote control pull box handle. The 30 second time delay device is also equipped with a manual release handle, however, actuation using this control will bypass the 30 second time delay. Upon activation, CO_2 is released into the system. The discharged a CO_2 is directed down two circuit paths. One circuit directs the agent to a pressure operated switch which immediately shuts off the diesel engine and machinery compartment exhaust fan. The flow of CO_2 also activates a warning siren and operates a pressure trip mechanism to close off the machinery compartment air intake plenum opening. The second circuit directs CO_2 to a 30 second time delay device to allow evacuation time for personnel prior to CO_2 discharge into the protected compartments via the three nozzles. It also provides the delay time needed for the other circuit to shut-down the engine and close all air intake and exhaust systems.

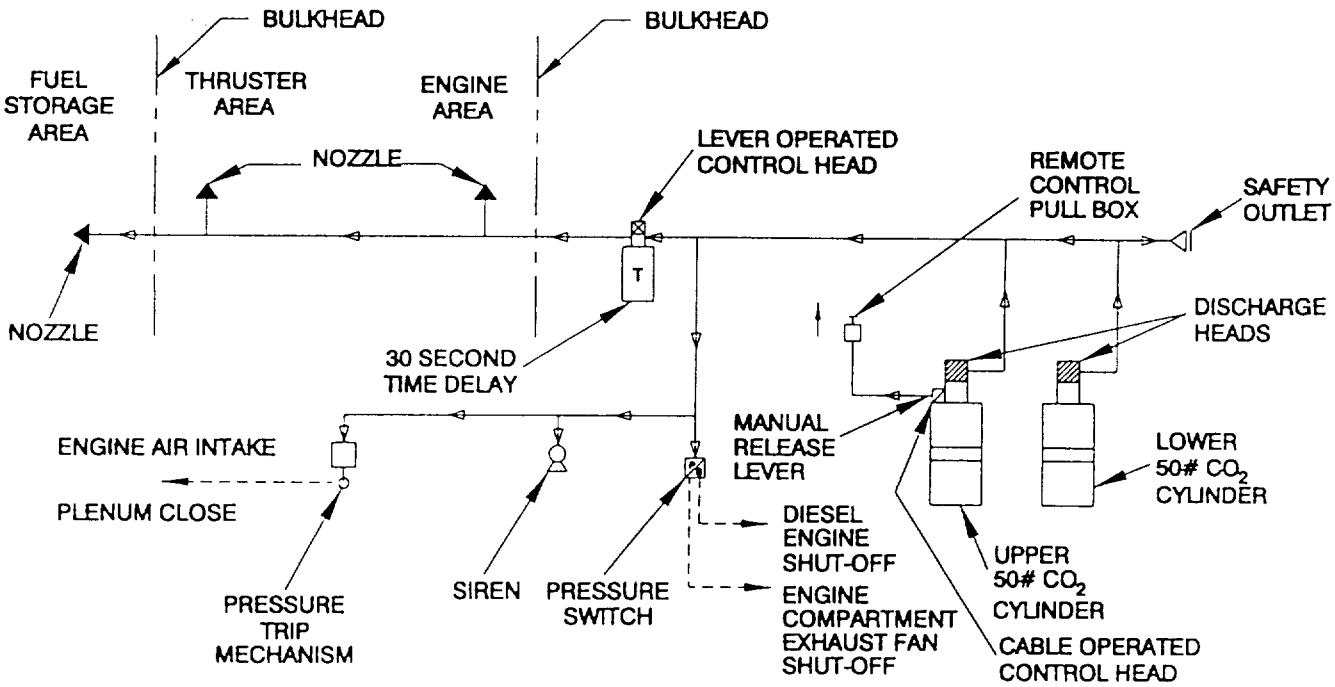

Figure 1-29. Fire Suppression System Schematic

CHAPTER 2
OPERATING INSTRUCTIONS

Section I	Description and Use of Operators Controls and Indicators	2-3
2-1	Introduction	2-3
2-2	Operator's Cab and Above Deck Controls and Indicators	2-3
2-2.1	Middle Control Panel	2-6
2-2.2	Lower Control Panel	2-9
2-2.3	Operator's Cab Circuit Breaker Panel	2-13
2-2.4	Mast Enclosure Assembly	2-15
2-2.5	Accessory Controls and Indicators	2-17
2-3	Below Deck Controls and Indicators	2-20
2-3.1	Electrical Controls	2-20
2-3.1.1	Engine Mounted Controls	2-22
2-3.1.2	Propulsion Module Circuit Breaker Panel (A6)	2-23
2-3.1.3	Engine Junction Box Assembly (A4)	2-25
2-3.1.4	Bilge Pump Control Assembly (A5)	2-26
2-3.1.5	Single Bilge Pump Control Assembly (A7)	2-28
2-3.2	Hydraulic Steering System Indicators	2-29
2-3.3	Fuel System Controls	2-30
2-3.4	Raw Water System Controls	2-31
2-4	Emergency Controls and Indicators	2-33
2-4.1	Anchorboard Assembly Controls and Indicators	2-35
2-4.2	Fire Detection System Controls and Indicators	2-37
2-4.3	Fire Suppression System Controls and Indicators	2-40
2-4.4	Diesel Engine Emergency stop Controls	2-45
2-4.5	Bilge Pump System Controls and Indicators	2-47
2-4.6	Emergency Shifting and Steering Controls and Indicators	2-49
Section II	Preventive Maintenance Checks and Services (PMCS)	2-52
2-5	Introduction	2-52
2-5.1	General PMCS Procedures	2-52
2-5.2	PMCS Procedures	2-52
2-5.3	Reporting Repairs	2-53
2-5.4	Leakage Definitions	2-53
Section III	Operation Under Usual Conditions	2-110
2-6	Removing and Staging Module Assemblies From Storage	2-110
2-6.1	Removal From Storage	2-113
2-6.2	MCF Nominal Weights	2-113
2-6.3	Disassembling and ISOPAK	2-115
2-6.4	Lifting End Rakes	2-117
2-6.5	Lifting Center Modules (Non-Powered)	2-118
2-7	Non-Powered Module/Non-Powered Section Assembly and Preparation for Use	2-119
2-7.1	Connector Assembly	2-119
2-7.2	Male Connector Assembly	2-120
2-7.3	Female Connector Assembly	2-121
2-7.4	P-3 Adapter Assembly Connection Assembly	2-122
2-7.5	MCF Section and String Assembly	2-124
2-7.6	Deck Fittings, Fenders, and Rhino Horn Installation	2-128

Section III	Operating Under Usual Conditions - Continued	
2-7.7	Module System Assembly	2-131
2-7.8	Flexor Connector Installation	2-135
2-7.9	Assembly Summation	2-137
2-7.10	Lifting the MCF Section	2-140
2-7.11	MCF Disengagement and Connector Stowage	2-141
2-7.12	MCF-NL Interoperability	2-143
2-8	Propulsion Module/Powered Section Assembly Preparation for Use	2-144
2-8.1	General Assembly Instructions	2-144
2-8.2	Detailed Propulsion Module Assembly Instructions	2-145
2-8.3	Initial Pre-Start Checks	2-163
2-9	Initial Adjustments, Checks, and Self-Test	2-171
2-10	Decals and Instruction Plate Locations	2-171
2-11	Operating Procedures	2-175
2-12	Operating MCF Auxiliary Equipment	2-182
2-13	Preparation for MCF Shipping and Movement	2-182
2-13.1	Propulsion Module Preservation	2-182
2-13.2	Propulsion Module Preparation for Shipment	2-182
2-13.3	Operator Cab and Plenum Preparation for Shipment	2-183
2-13.4	Mast/Stub Mast Assembly Preparation for Shipment	2-183
2-13.5	Preparation for Movement	2-183
Section IV	Operation Under Unusual Conditions	2-184
2-14	Unusual Environment/Weather	2-184
2-15	Emergency Procedures	2-185
2-15.1	Emergency Shutdown of Engine	2-185
2-15.2	Fire Aboard the Vessel	2-186
2-15.3	Emergency Steering	2-186
2-15.4	NATO Receptacle	2-187
2-16	Nuclear, Biological, and Chemical (NBC) Decontamination Procedures	2-189
2-17	Jamming and Electronic Countermeasures (ECM)	2-189
Section V	MCF Functional Checks	2-190
2-18	Operator Procedures	2-190

Section I. Description and Use of Operators Controls and Indicators.

2-1 INTRODUCTION. This section describes the location and functions of all MCF controls and indicators. Review this section thoroughly before operating the system. The types of controls and indicators are divided into three areas: Operator's Cab and Above Deck, Below Deck, and Emergency.

2-2 OPERATOR'S CAB AND ABOVE DECK CONTROLS AND INDICATORS.

NOTE

The manually operated exhaust plenum vent, although located above deck, is discussed under Emergency Controls and Indicators, paragraph 2-4.

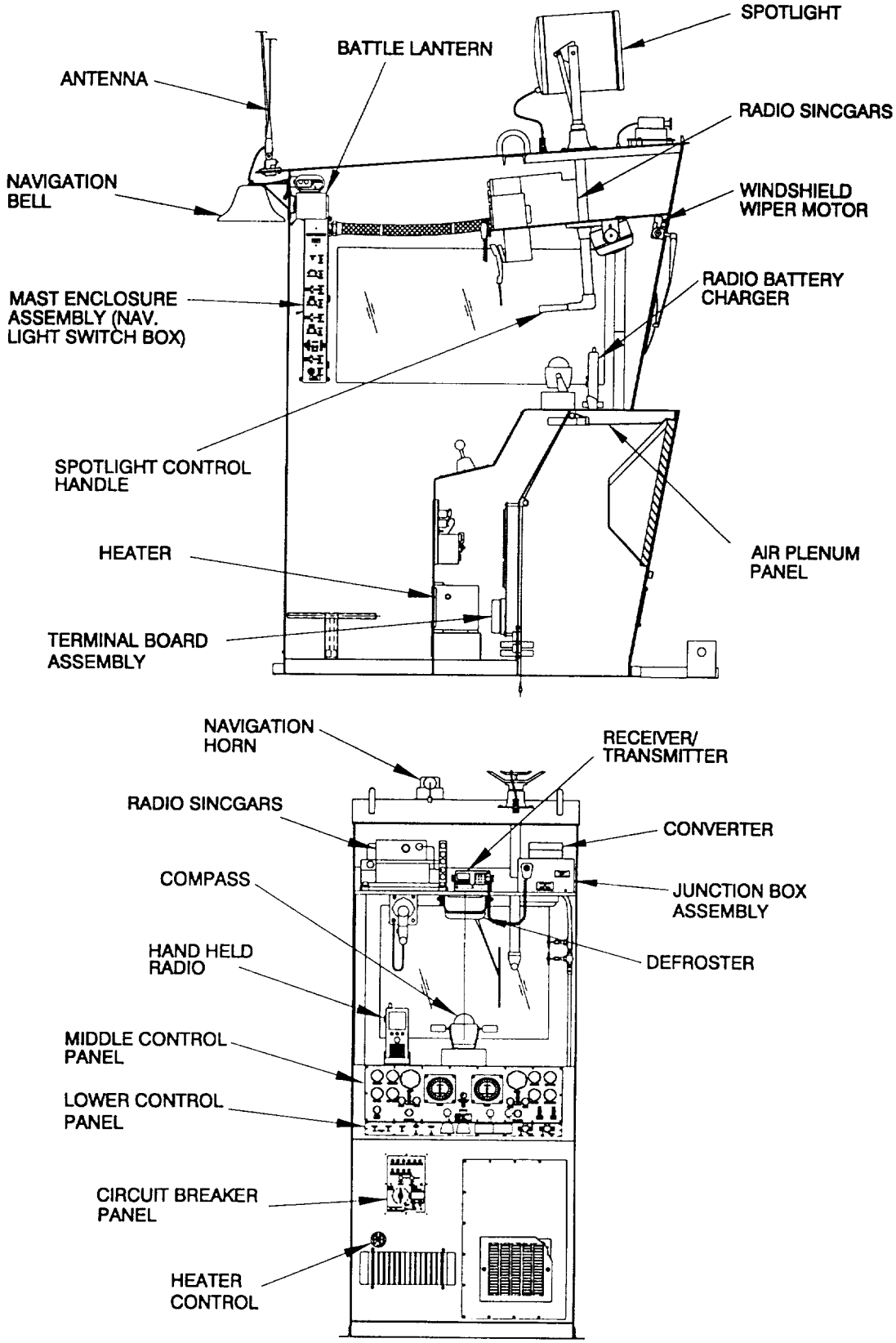

Figure 2-1. Operator's Cab and Above Deck Controls and Indicators (Sheet 1 of 2).

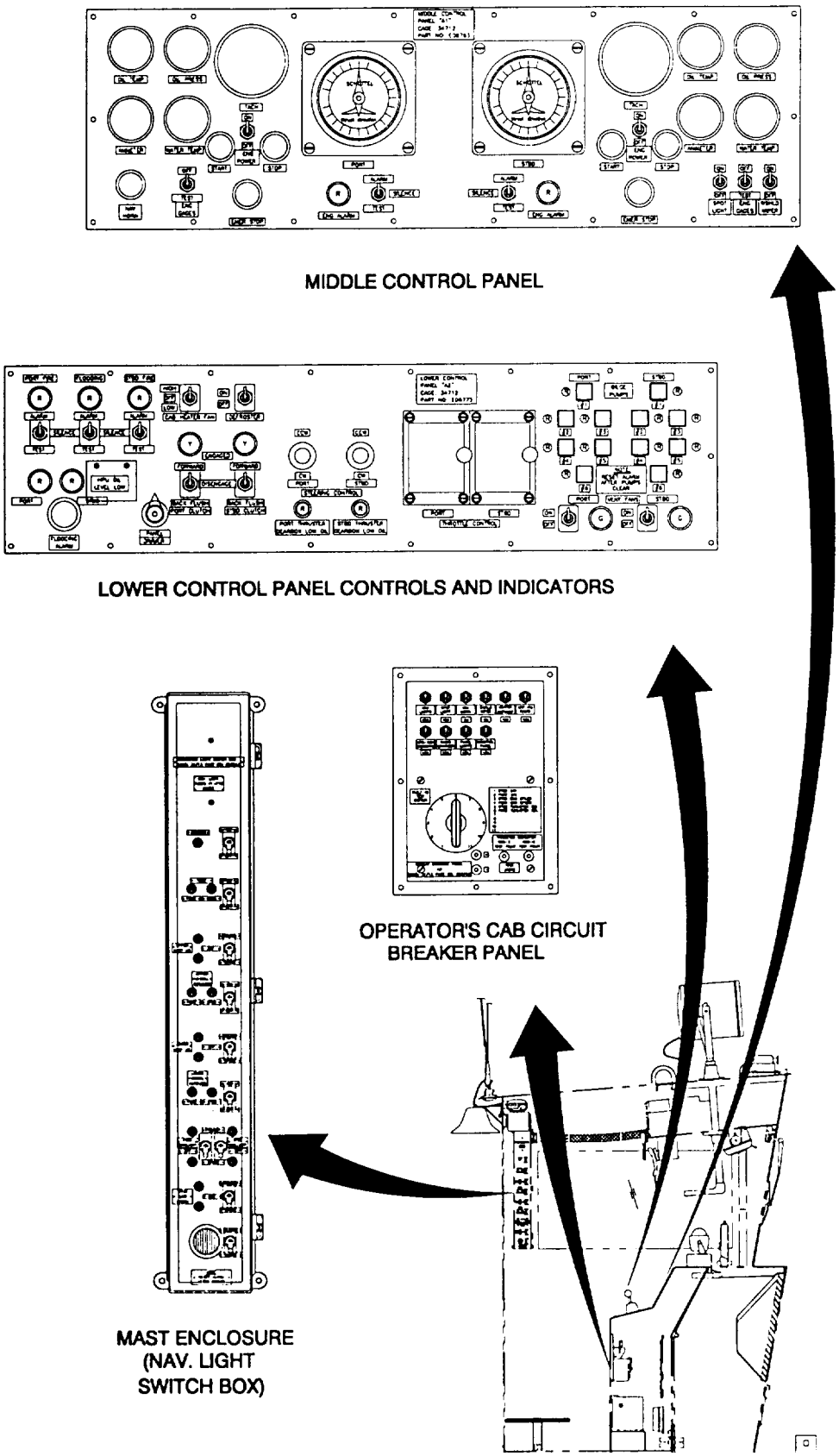

Figure 2-1. Operator's Cab and Above Deck Controls and Indicators (Sheet 2 of 2).

2-2.1 Middle Control Panel. The middle control panel (Figure 2-1) has been divided into three sections for clarity. Each control and indicator and its related function is described in Table 2-1.

Table 2-1. Middle Control Panel Controls and Indicators.

Item	Control/Indicator	Function
1	TACHometer Gauge	(Port and Starboard) Indicates Engine RPM, 0-4000.
2	OIL PRESSure Gauge	(Port and Starboard) Indicates engine oil pressure (50-70 normal operating psi).
3	OIL TEMPerature Gauge	(Port and Starboard) Indicates engine oil temperature. (215°F - 230°F operating temperature).
4	WATER TEMPerature Gauge	(Port and Starboard) Indicates engine water temperature. (170°F - 185°F normal operating temperature).
5	AMMETER Gauge	(Port and Starboard) Indicates battery charge and discharge.
6	NAV HORN Push Button	When depressed Navigation Horn sounds.
7	START Push Button	(Port and Starboard) When depressed completes electrical circuit to the start engine.
8	STOP Push Button	(Port and Starboard) When depressed shuts down electrical circuit to stop the engine.
9	ENG ALARM Toggle Switch with indicating light	(Port and Starboard) **CAUTION** **DO NOT operate MCF with switch in SILENCE position.** Engine Alarm System. Audible alarm (bell) sounds and red light illumination indicates Low Oil Pressure or High Water Temperature. If alarm is sounded operator must visually observe Port and Starboard Engine Alarm (red) indicator lights to determine which engine is indicating a problem ALARM = bell sounds and RED light ON in operator's cab. SILENCE = bell alarm silenced, RED light remains ON. TEST (momentary) = bell sounds, RED light goes ON.
10	WSHLD WIPER Toggle Switch	Turns windshield wiper on/off.
11	SPOT LIGHT Toggle Switch	Turns Search Light on/off.
12	ENG POWER Toggle Switch	(Port and Starboard) Turns Power on/off to electrical system.
13	EMERgency STOP Push Button	(Port and Starboard) When depressed shuts down engine by cutting off air supply. The Air Shutoff Valve located on the engine must be reset manually. Notify maintenance if Emergency Stop has been used to determine the cause of the malfunction.
14	ENG GAUGES Toggle Switch	(Port and Starboard) Allows engine gauges indicating oil pressure, water temperature and amperage to be read without engine(s) running.

Table 2-1. Middle Control Panel Controls and Indicators.		
Item	**Control/Indicator**	**Function**
15	THRUST DIRECTION Dial Indicator	(Port and Starboard) Indicates direction of the thrust.

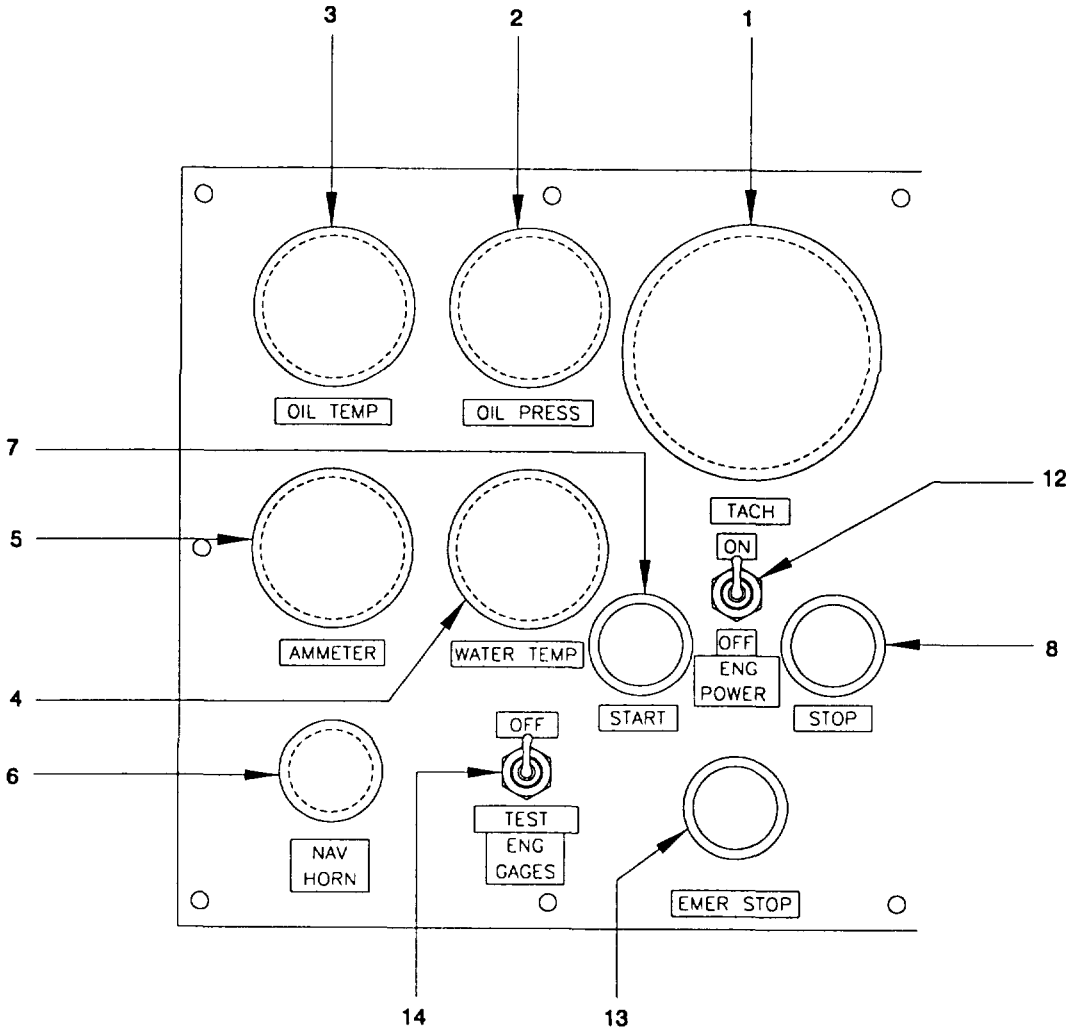

Figure 2-2. Middle Control Panel (A1) Controls and Indicators (Sheet 1 of 2).

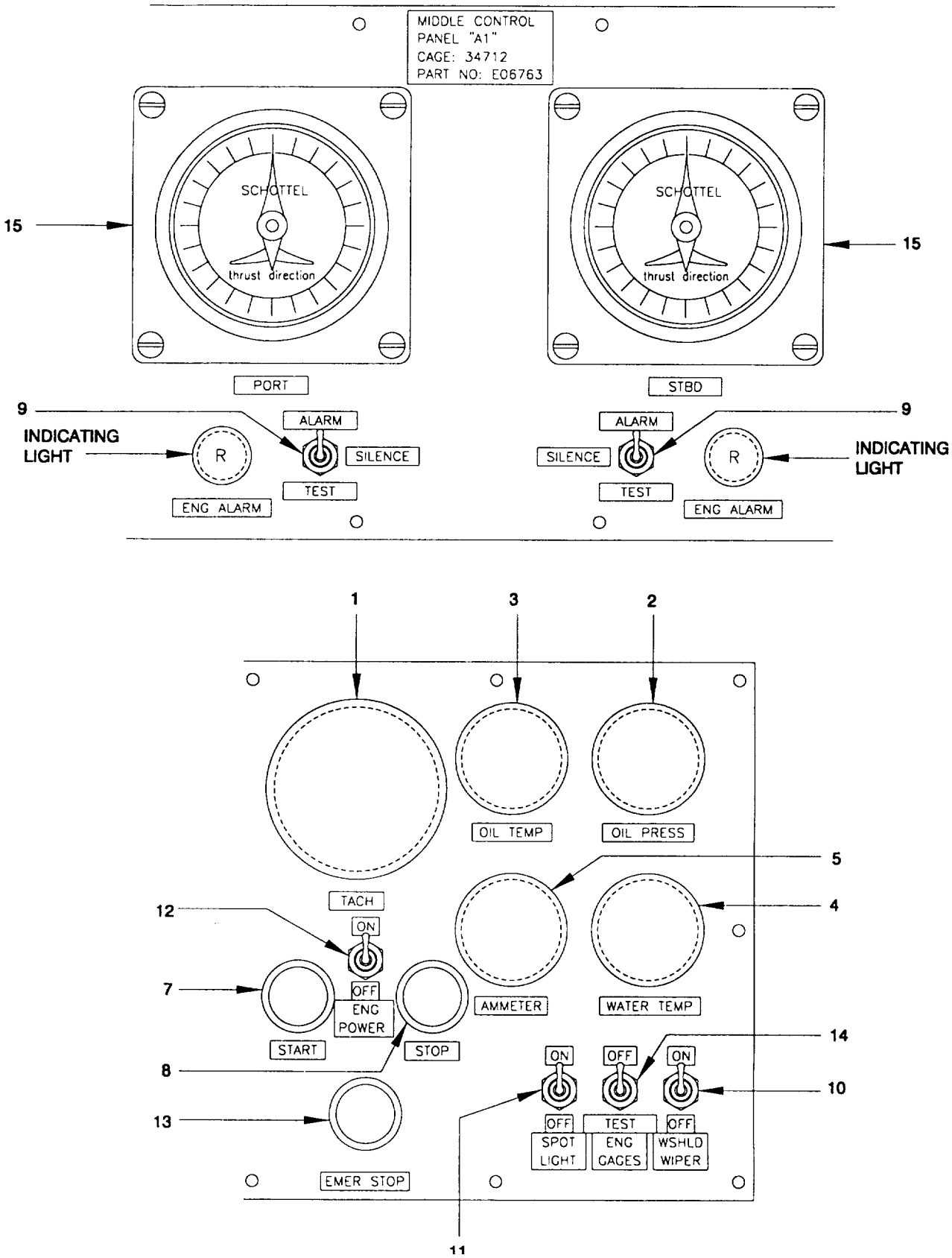

Figure 2-2. Middle Control Panel (A1) Controls and Indicators (Sheet 2 of 2).

2-2.2 Lower Control Panel. The lower control panel (Figure 2-3) has been divided into three sections for clarity. Table 2-2 describes the control or indicator and its corresponding function.

Table 2-2. Lower Control Panel Controls and Indicators.

Item	Control/Indicator	Function
1	THROTTLE CONTROL, Levers	(Port and Starboard) Lever controls engine RPM's. RPM's are indicated on Tachometer Gauge.
2	PORT FIRE ALARM/ STBD FIRE ALARM/SILENCE/TEST, Toggle Switch with Indicating Light (Red)	**WARNING** **DO NOT operate MCF with switch in SILENCE position during normal operation.** Audible alarm (horn) indicates below deck temperature above 225°F. Possible fire in port and/or starboard propulsion module. ALARM = Horn sounds and RED light ON in operator's cab. SILENCE = Horn silenced, RED light remains ON. TEST (momentary) = Horn sounds, RED light ON. Reset to ALARM when normal conditions exist.
3	FLOODING ALARM/SILENCE/TEST, Toggle Switch	**WARNING** **DO NOT operate MCF with switch in SILENCE position during normal operations.** Audible alarm (pulse beeper) indicates possible flooding in port and/or starboard propulsion module. ALARM = Pulse beeper sounds and RED light ON in operator's cab. SILENCE = Pulse beeper is silenced, RED light ON TEST (momentary) = Pulse beeper sounds, RED light ON. Reset to ALARM when normal conditions exist.
4	BILGE PUMP, Indicator/Switch with Green Light	(Port and Starboard) Six switches for each module (total of twelve in the operator's cab), controls the operation of bilge pumps and illuminates when pumps are working.
5	BILGE PUMP, Indicating Light(s) (Red)	(Port and Starboard) Six red indicating lights for each module (total of twelve in the operator's cab), illuminates when float switch tripped by water.
6	CAB HEATER FAN HIGH/OFF/LOW, Toggle Switch	HIGH = High speed control of heater fan. OFF = Heater fan is off. LOW = Low speed control of heater fan.
7	VENT FAN Toggle Switch with Indicator Light (Green)	(Port and Starboard) ON/OFF control of exhaust plenum vent fans. Green light is illuminated when switch is ON and vent fans are functioning.

Table 2-2. Lower Control Panel Controls and Indicators.		
Item	**Control/Indicator**	**Function**
8	PORT/STBD CLUTCH BACKFLUSH/DISENGAGED/ FORWARD Toggle Switch with ENGAGED indicator (yellow) light	(Port and Starboard) Controls clutch engagement. To engage clutch FORWARD, position toggle switch up. YELLOW light comes ON. To disengage, return toggle to center position. YELLOW light goes OFF. To engage clutch BACKFLUSH, lift up on switch handle and position toggle switch down. YELLOW light comes ON.
9	STEERING CONTROL PORT/STBD CW/CCW, Joystick Levers	(Port and Starboard) Controls directional rotation of the pump-jet steering nozzle. Pull lever back to produce clockwise (CW) rotation. Push lever forward to produce counter-clockwise (CCW) rotation. THRUST DIRECTION indicators located on the Middle Control Panel (Figure 2-1) will rotate accordingly.
10	PANEL DIMMER, Rotating Dial Switch	Controls brightness of panel lights. Controls brightness of Green and Yellow indicator lights, thrust direction dial indicator lights, compass and gauge control lights on both Middle and Lower panels for night operations. **NOTE** **Does not dim red lights.**
11	DEFROSTER ON/OFF, Toggle Switch	Turns power ON/OFF to operator's cab defroster fan.
12	HPU OIL LEVEL LOW, Indicating Light (Red)	(Port and Starboard) Red light illuminates when Hydraulic Power Unit (HPU) oil level is below required operating level.
13	PORT/STBD THRUSTER GEARBOX LOW OIL, Indicating Light (Red)	(Port and Starboard) Red light illuminates when pump-jet gearbox oil level is below required operating level.
14	FLOODING ALARM, Pulse Beeper with Speaker	Audible pulse beeper that sounds when flooding of the powered module occurs and the FLOODING ALARM toggle switch is set to ALARM (Item 3).

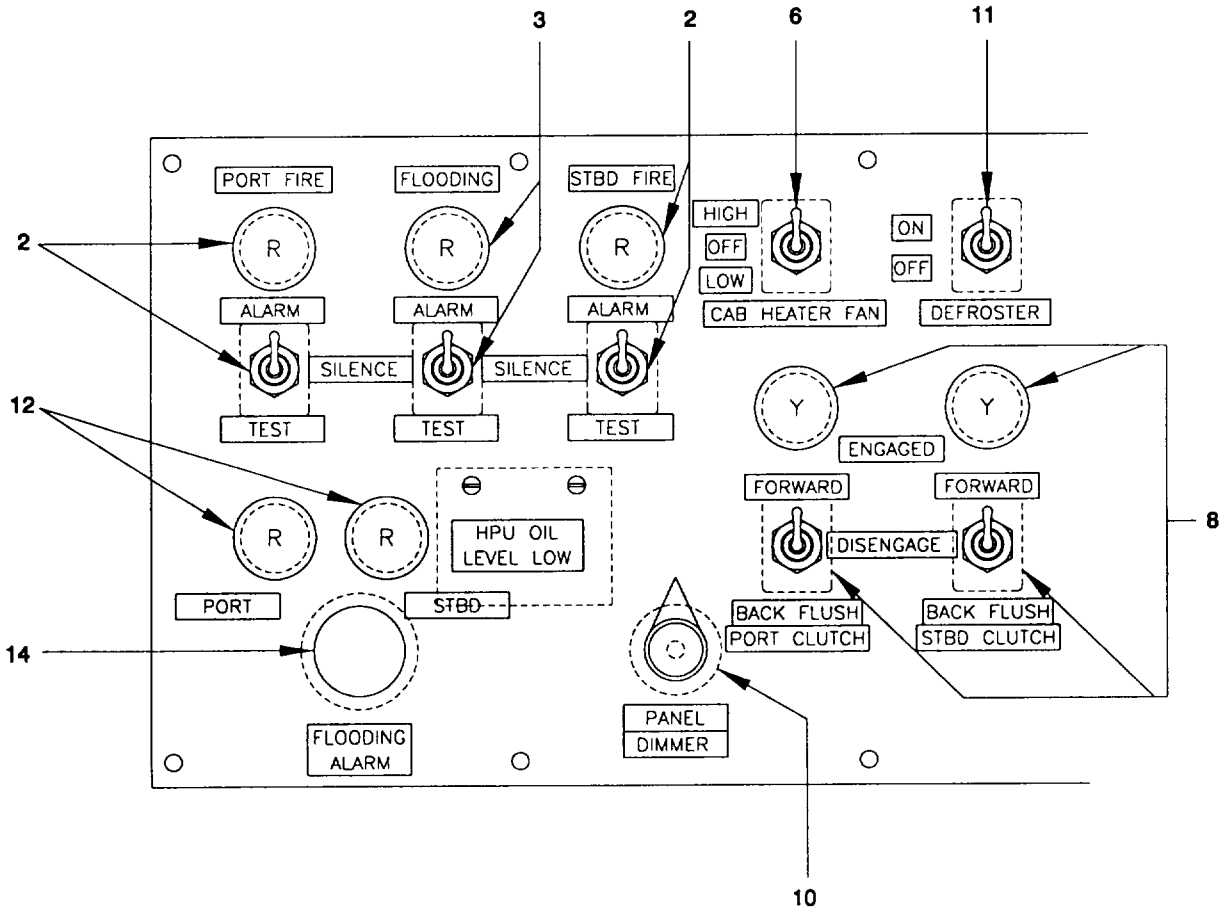

Figure 2-3. Lower Control Panel (A2) Controls and Indicators (Sheet 1 of 2).

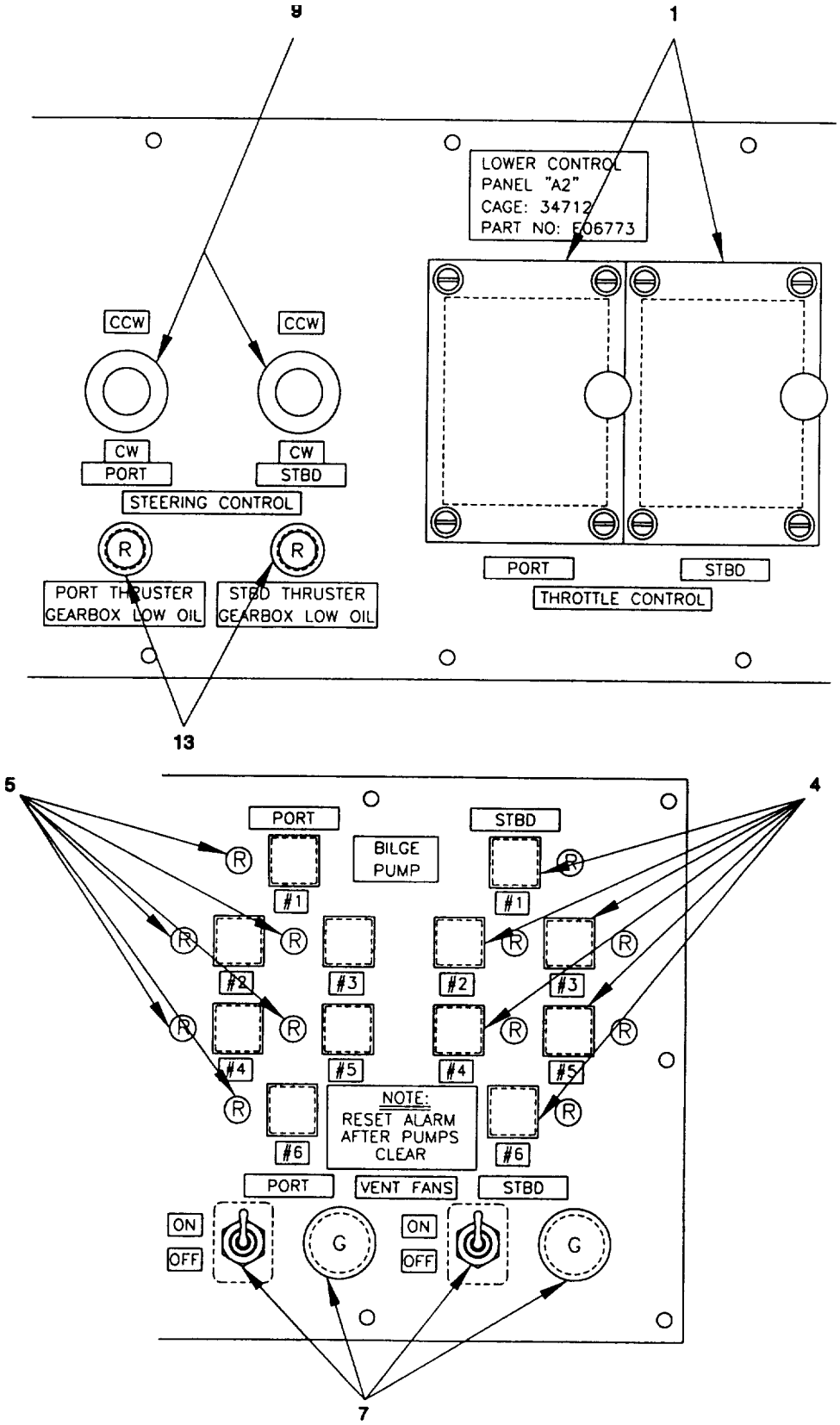

Figure 2-3. Lower Control Panel (A2) Controls and Indicators (Sheet 2 of 2).

2-2.3 Operator's Cab Circuit Breaker Panel. Table 2-3 describes the operator's cab circuit breaker panel (Figure 2-4) controls or indicators and their corresponding functions. The power to this breaker panel is controlled by the Propulsion Module Circuit Breaker Panel in the engine compartment.

NOTE

The propulsion module circuit breaker panel "MAIN" circuit breaker and "OPR CAB" circuit breakers must be in the up, or ON, position at the same time. If the propulsion module circuit breaker panel circuit breakers are not in the ON position, the operator's cab circuit breaker panel is not energized.

Table 2-3. Operator's Cab Circuit Breaker Panel

Item	Control/Indicator	Position/Function
1	NAV LIGHTS Circuit Breaker	Up (On)/Down (Off) - Controls electrical power to the mast enclosure (navigation light switch box).
2	SPOTLIGHT Circuit Breaker	Up (On)/Down (Off) - Controls electrical power to the spotlight toggle switch on the Middle Control Panel.
3	NAV HORN Circuit Breaker	Up (On)/Down (Off) - Controls electrical power to the navigational horn push button on the Middle Control Panel.
4	WSHLD WIPER Circuit Breaker	Up (On)/Down (Off) - Controls electrical power to windshield wiper toggle switch on the Middle Control Panel.
5	HEATER DEFROST Circuit Breaker	5Up (On)/Down (Off) - Controls electrical power to the cab heater fan and defroster toggle switch.
6	VHF-FM RADIO Circuit Breaker	Up (On)/Down (Off) - Controls electrical power to VHF-FM radio system in operator's cab.
7	VRC-90A SINCGARS Circuit Breaker	Up (On)/Down (Off) - Controls electrical power to SINCGARS radio system in operator's cab.
8	RADIO CHARGER Circuit Breaker	Up (On)/Down (Off) - Controls electrical power to handhold radio charger.
9	PANEL LIGHTS Circuit Breaker	Up (On)/Down (Off) - Controls electrical power to panel lights dimmer control located on lower Control Panel.
10	CONTROL PANEL Circuit Breaker	Up (On)/Down (Off) - Controls electrical power to Alarms, Emergency Stops, and Bilge Pumps in operator's cab.
11	BUILT-IN TEST SWITCH	11 rotary contact function switch to troubleshoot controls.
12	+ Jack Plug-Positive	Plug In-POSITIVE - Connection for diagnostic tester.
13	- Jack Plug-Negative	Plug In-NEGATIVE - Connection for diagnostic tester.
14	THRUSTER INDICATOR - Jack Plug-Negative	Plug In-NEGATIVE - Two connections for diagnostic tester.

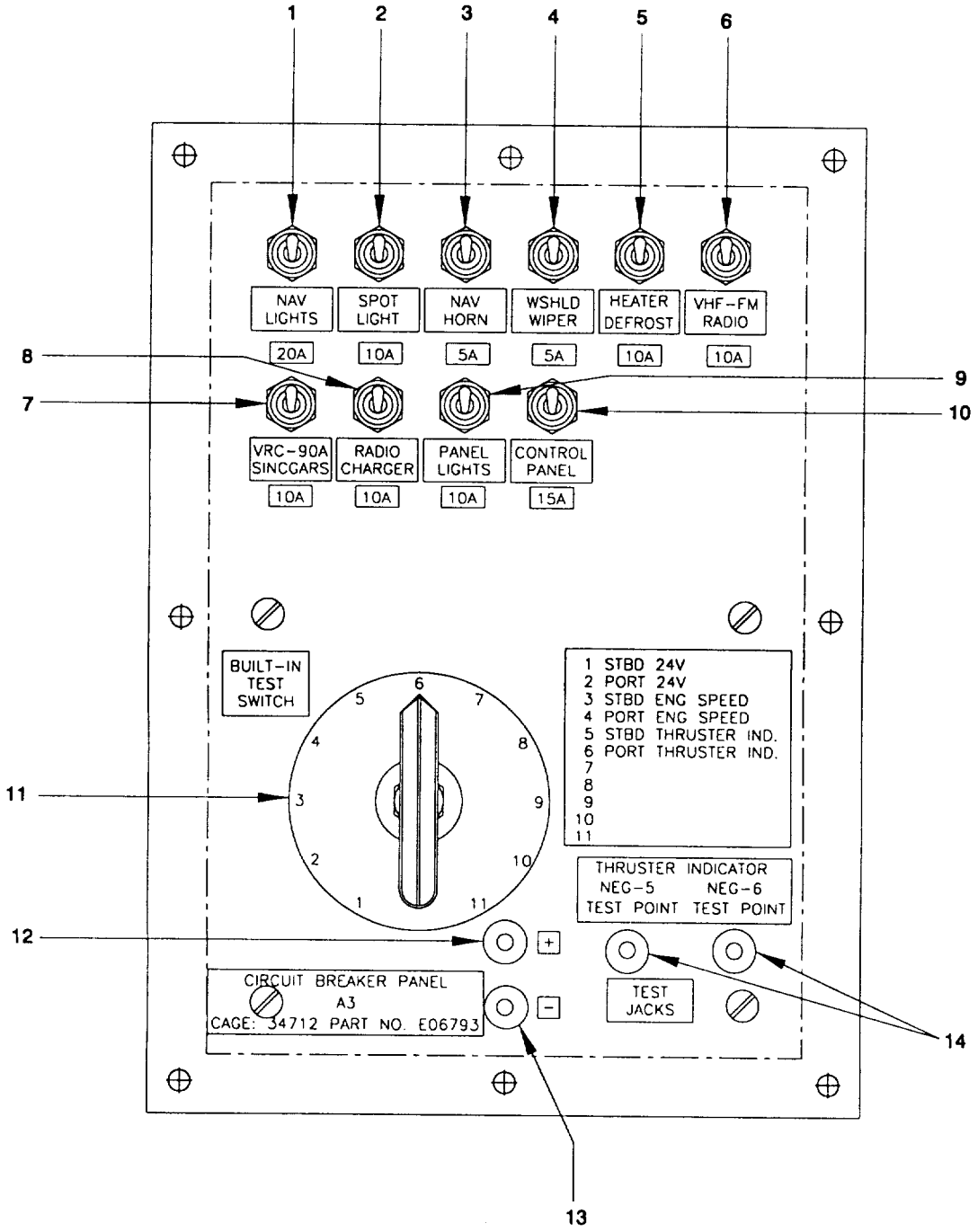

Figure 2-4. Operator's Cab Circuit Breaker Panel (A3).

2-2.4 Mast Enclosure Assembly. The mast enclosure (navigation light switch box) assembly (Figure 2-5), contains electrical controls and indicators to control lighting on the main and stub navigational masts. Table 2-4 describes each control or indicator and its corresponding function.

Table 2-4. Mast Enclosure Assembly.

Item	Control/Indicator	Position/Function
1	ALARM/SILENCE Toggle Switch with Speaker	2 Position toggle switch for: ALARM - pulse beeper alarm activated if a primary mast light becomes inoperative, SILENCE - pulse beeper audible alarm inactivated.
2	STUB MAST STERN Toggle Switch with Red Indicator Lights.	3 Position toggle switch for: PRIMARY - illuminates primary stub mast stern light, OFF - light is extinguished, SPARE - illuminates spare stub mast stern light.
3	PORT SIDELIGHT Toggle Switch with Red Indicator Lights.	3 Position toggle switch for: PRIMARY - illuminates primary port sidelight, OFF - light is extinguished, SPARE - illuminates spare port sidelight.
4	LOWER VESSEL AGROUND Toggle Switch with Red Indicator Lights.	2 Position toggle switch for: ON - illuminates port and starboard lower vessel aground lights, OFF - lights are extinguished.
5	LOWER MAST HD Toggle Switch with Red Indicator Lights.	3 Position toggle switch for: PRIMARY - illuminates primary lower mast head light, OFF - light is extinguished, SPARE - illuminates spare lower mast head light.
6	UPPER VESSEL AGROUND Toggle Switch with Red Indicator Lights.	2 Position toggle switch for: ON - illuminates upper port and starboard vessel aground lights, OFF - lights are extinguished.
7	UPPER MAST HD Toggle Switch with Red Indicator Lights.	3 Position toggle switch for: PRIMARY - illuminates primary upper mast head light, OFF - light is extinguished, SPARE - illuminates spare upper mast head light.
8	TASK Toggle Switch with Red Indicator Lights.	2 Position toggle switch for: ON - illuminates port and starboard task lights, OFF - lights are extinguished.
9	ANCHOR Toggle Switch with Red Indicator Light.	2 Position toggle switch for: ON - illuminates anchor navigation light, OFF- light is extinguished.
10	STBD SIDELIGHT Toggle Switch with Red Indicator Lights.	3 Position toggle switch for: PRIMARY - illuminates primary starboard sidelight, OFF - light is extinguished, SPARE - illuminates spare starboard sidelight.

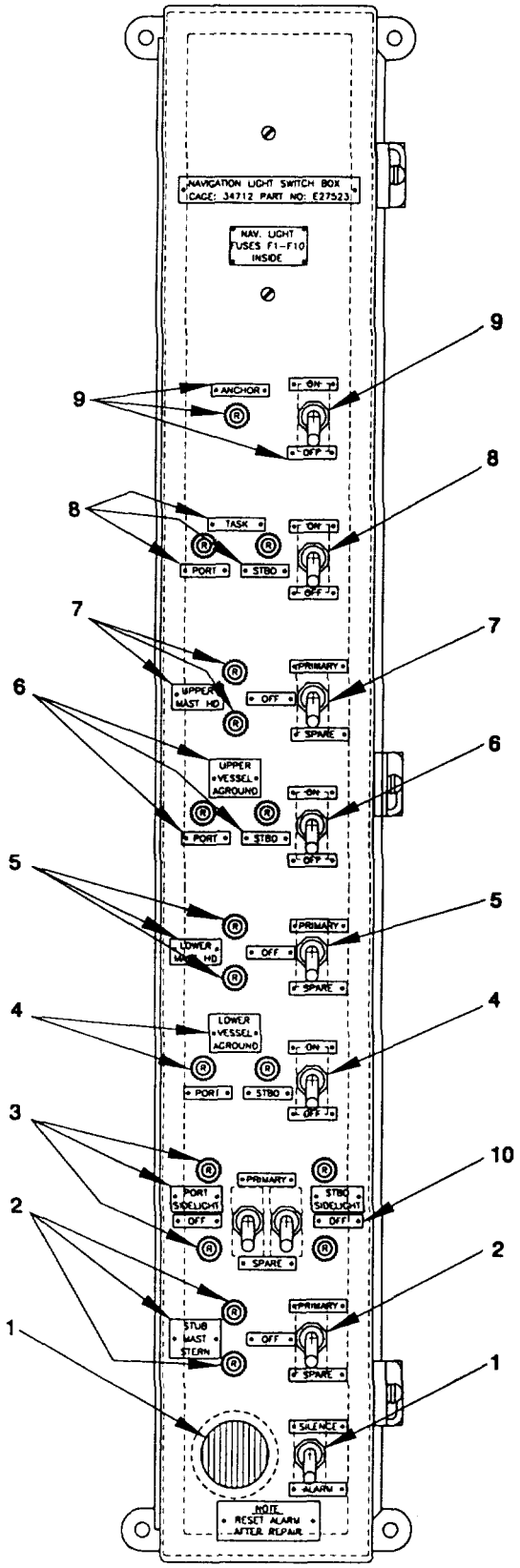

Figure 2-5. Mast Enclosure Assembly.

2-2.5 Accessory Controls and Indicators. The operator's cab houses auxiliary equipment and controls for operation safety and enhancement (Figure 2-6). Table 2-5 describes each control or indicator and its corresponding function. The heater and defroster require hot water, which comes from the diesel engine's gycohol cooling system. There are hot water shutoff valves for the operator's cab heating system. These must be OPEN for water to flow and the heating system ON to provide heat. The defroster has inlet, outlet, and bleeder valves. Electric toggle switches on the lower control panel activate the heater and defroster fans. Three types of communications equipment in the operator's cab, VHF-FM Radio, VRC-90A SINCGARS radio, and handheld radio unit, have their controls and indicators explained in separate manuals. The spotlight can be rotated side to side and up and down with the control handle, and locked in horizontal and vertical angular positions using lock knobs. An electric toggle switch on the middle control panel activates the spotlight.

Table 2-5. Miscellaneous Above Deck Controls and Indicators.

Item	Control/Indicator	Function
1	HEAT ON/OFF Valve (Heater)	Allows antifreeze mixture to flow into cab heater core from engine freshwater system.
2	NORMALLY OPEN Valve (Heater)	Allows antifreeze mixture to flow out of heater core and return to engine freshwater system.
3	HEAT ON/OFF Valve (Defroster)	Allows antifreeze mixture to flow into cab defroster core from engine freshwater system.
4	NORMALLY OPEN Valve (Defroster)	Allows antifreeze mixture to flow out of defroster core and return to engine freshwater system.
5	Bleeder Valve (Defroster)	Allows air to be bled from the defroster system.
6	Spotlight Angle Lock Knob	Holds vertical angle of spotlight to MCF Deck.
7	Spotlight Up and Down Lock Knob	Holds left/right (port/starboard) position of spotlight.
8	Spotlight Control Handle	Allows vertical and horizontal movement of spotlight from inside the cab when the lock knobs are not locked down.
9	Compass	Operator directional indicator.
10	VHF-FM Radio Controls and Indicators	Reference radio manual for use of controls and indicators.
11	VRC-90A SINCGARS Controls and Indicators	Reference SINCGARS (Single Channel Ground & Airborne Radio) manual TB 11-5820-890-20-59 and TM 11-5820-890-10-1 for use of controls and indicators.
12	Handheld Radio Unit	Reference handheld radio manual for use of controls and indicators.

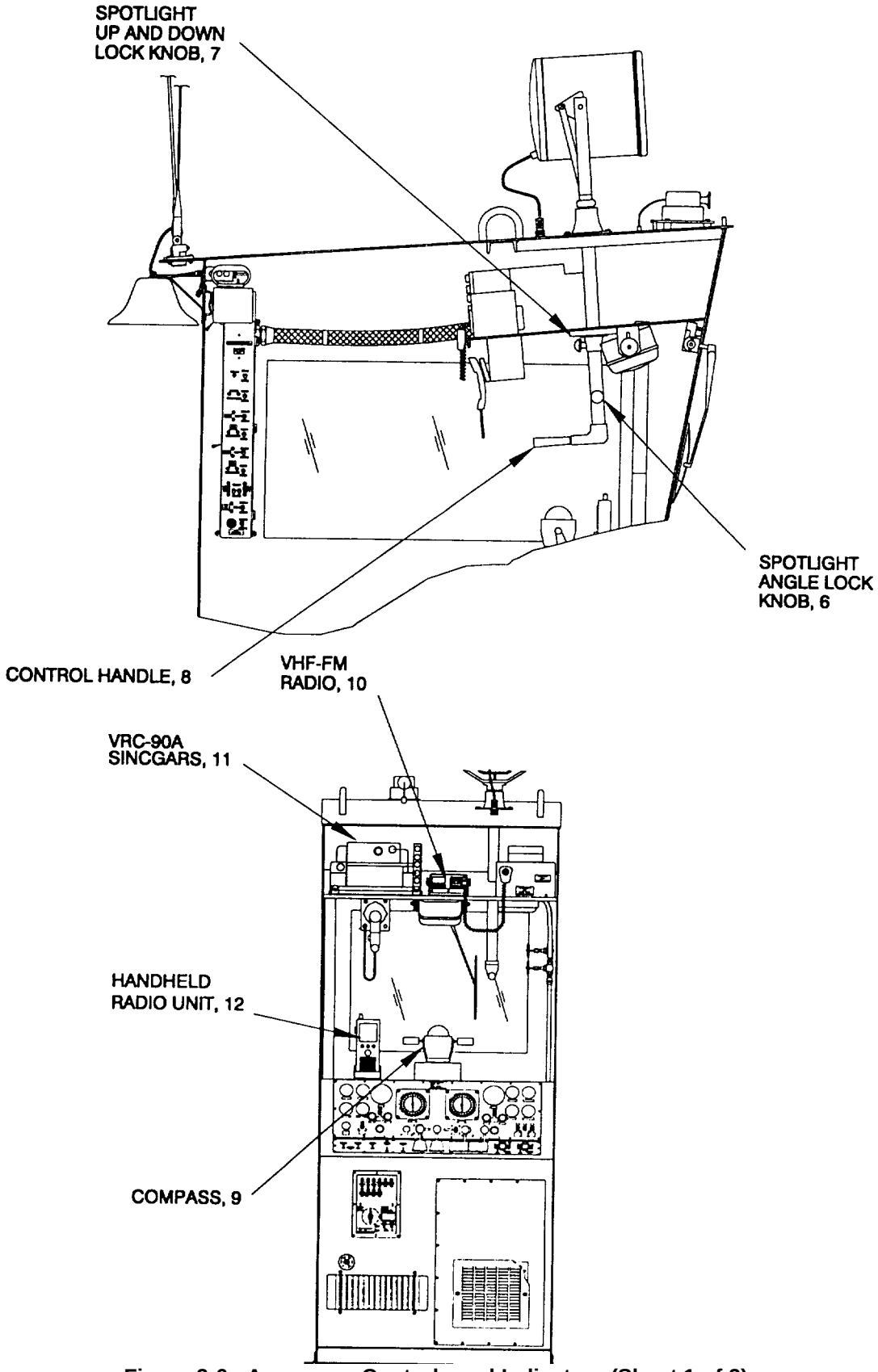

Figure 2-6. Accessory Controls and Indicators (Sheet 1 of 2).

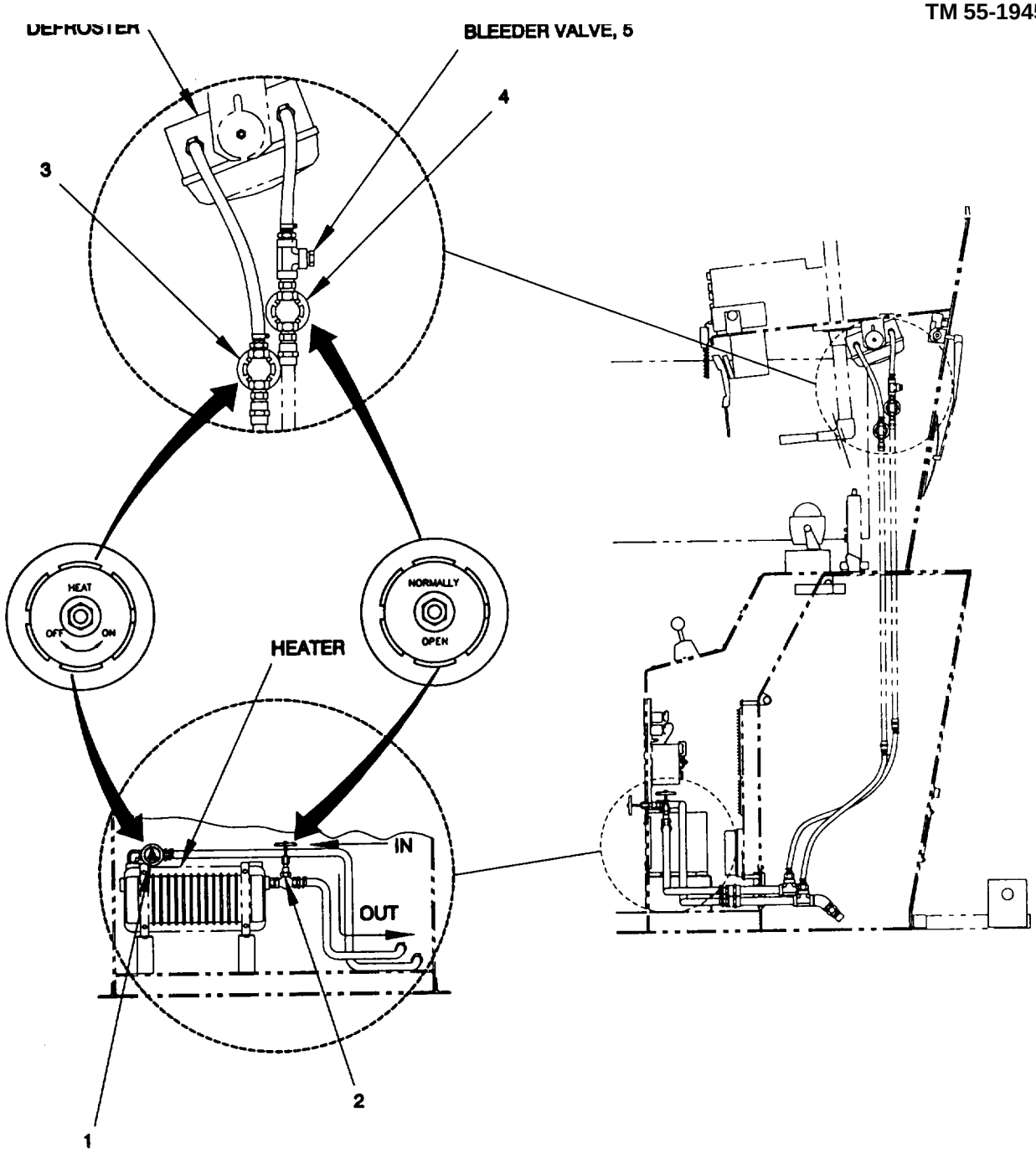

Figure 2-6. Accessory Controls and Indicators (Sheet 2 of 2).

2-3 BELOW DECK CONTROLS AND INDICATORS.

2-3.1 Electrical Controls. The electrical controls located below deck (Figure 2-7) are found in the lazaret and machinery compartment of the propulsion module. The Pump-Jet/Thruster Junction Box (A2JB2), Propulsion Module Junction Box (A3), Bilge Pump Junction Boxes (JB1, JB2, JB5, JB6, JB8), Vent Fan Relay Enclosure Assembly (A8), and Pump-Jet/Thruster Direction/Auxiliary Battery Junction Box (A9) are found below deck for electrical control corrective maintenance.

LEGEND:

A1	ENGINE & COMPONENTS, NOTE 1.
A1B1	ENGINE STARTER
A2	THRUSTER & COMPONENTS
A2B1	THRUSTER STEERING POSITION SYNCHRO
A2JB2	THRUSTER JUNCTION BOX E26929
A2JB1	HYDRAULIC CONTROL NOTE 2.
A2S2	THRUSTER GEAR BOX OIL LEVEL SW
A3	PROPULSION MODULE JUNCTION BOX, E28803
A4	ENGINE JUNCTION BOX & E STOP SW, E08913
A5	BILGE PUMP CONTROL PANEL, E08893
A6	CIRCUIT BREAKER PANEL, E06793
A7	SINGLE BILGE PUMP CONTROL PANEL, E08903
A8	VENT FAN RELAY ENCLOSURE, E23703, FOR MOTOR B1
A9	THRUSTER DIR/AUX) BATT. JUNCTION BOX ASSY. ENCLOSURE E28253.
B1	VENT FAN MOTOR (B1)
BT	BATTERY
G1	ALTERNATOR
JB1	JUNCTION BOX FOR #1 BILGE PUMP (B2)
JB2	JUNCTION BOX FOR #3 BILGE PUMP (B4)
JB3	NATO RECEPTACLE
JB5	JUNCTION BOX FOR #5 BILGE PUMP (B6)
JB6	JUNCTION BOX FOR #6 BILGE PUMP (B7)
JB8	JUNCTION BOX FOR #4 BILGE PUMP (B5)
L1	COLD START SOLENOID
L2/L3	CLUTCH ENGAGE FORWARD/ENGAGE BACKFLUSH SOLENOIDS
S2	CO_2 PRESSURE SWITCH
S8	FIRE THERMAL DETECTOR LOCATED AFT
S9	FIRE THERMAL DETECTOR LOCATED MIDDLE
VR1	REGULATOR FOR ALTERNATOR

LEGEND NOTES:

1. ENGINE COMPONENTS INCLUDE ACTUATOR FOR SPEED GOVERNOR, ELECTRONIC OVERSPEED SWITCH, PRESSURE SWITCHES, TEMP & PRESS SENDING UNITS
   ETC. SEE POWER MODULE SCHEMATIC. THESE ARE WIRED TO ENGINE IN HARNESS K-MB1
2. HYD CONTROL BOX CONNECTS TO STEERING SOLENOIDS.
3. THIS LEGEND LISTS ONLY THOSE COMPONENTS CONNECTED IN PROPULSION MODULE & DOES NOT ADDRESS COMPONENTS WIRED ON SUBASSEMBLIES.

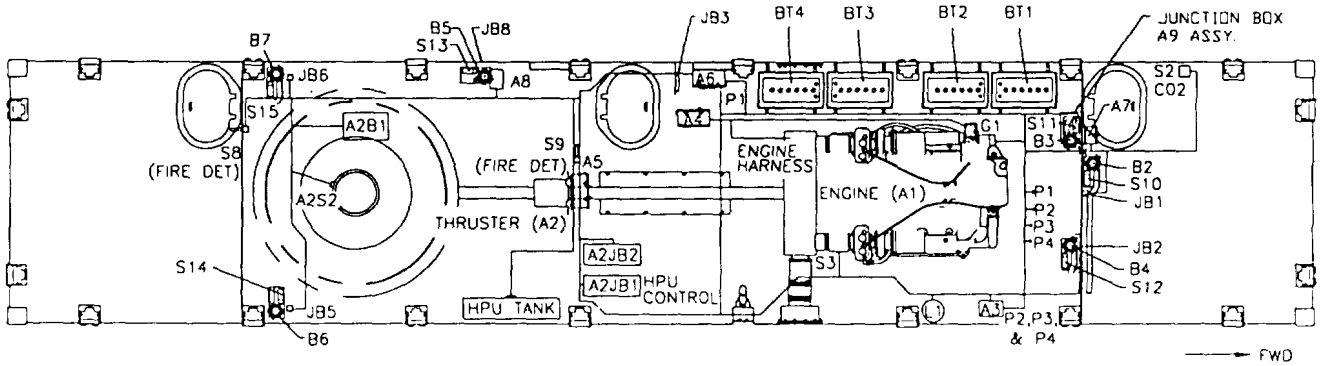

Figure 2-7. Below Deck Controls and Indicators.

2-3.1.1 Engine Mounted Controls. The following describes controls and indicators that are mounted on the diesel engine. The engine mounted controls and indicators (Figure 2-8) are located in the machinery compartment. Table 2-6 describes each control or indicator and its corresponding function.

Table 2-6. Diesel Engine Controls and Indicators

Item	Control/Indicator	Function
1	Engine Hour Meter	Totals the number of hours the engine has been run. (See engine hours logbook entry).
2	Normal Stop Switch	When depressed and held down, the fuel supply is cut off from the engine, stopping the engine.
3	Air Inlet Restriction Indicators	Red button pops out when filters are dirty and need to be changed. Each turbocharger has one indicator.

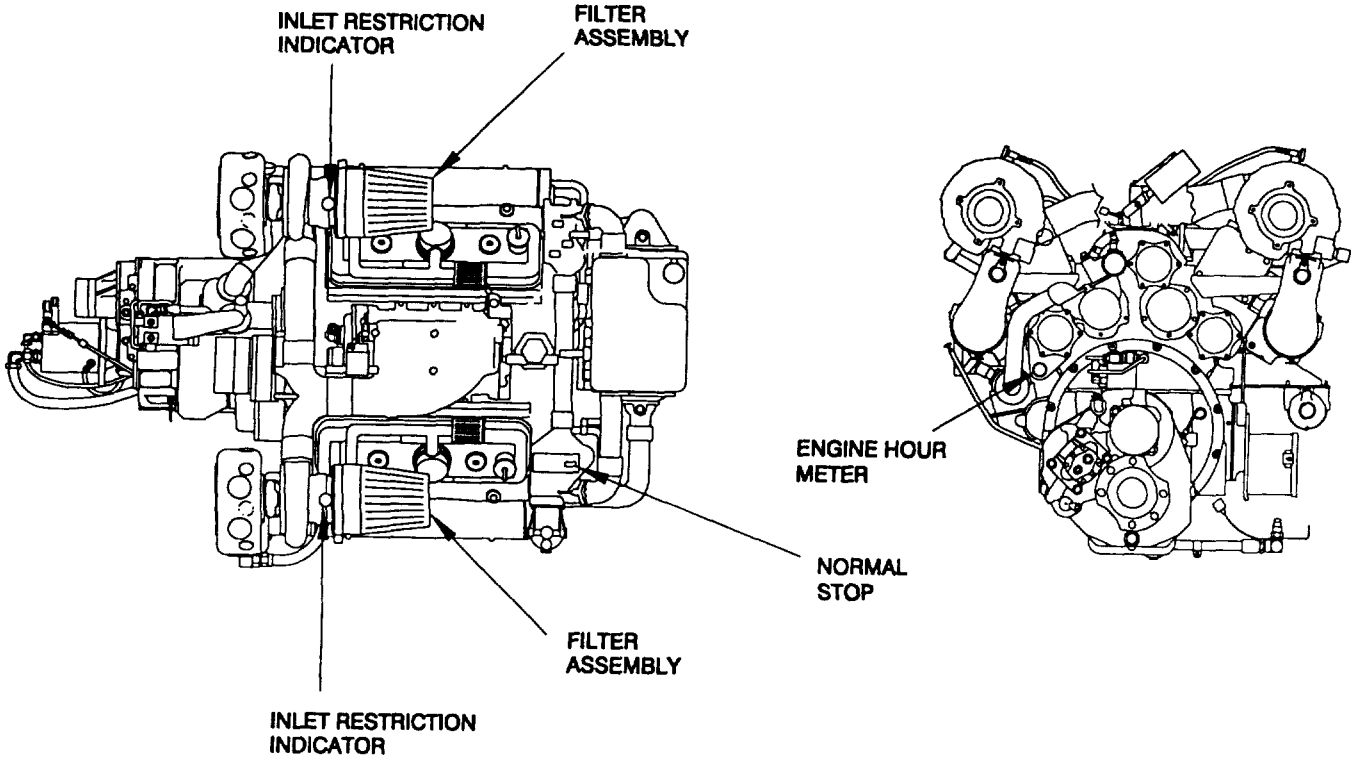

Figure 2-8. (Diesel) Engine Mounted Controls.

2-3.1.2 Propulsion Module Circuit Breaker Panel (A6). The propulsion module circuit breaker panel (Figure 2-9) is located in the machinery compartment of the propulsion module. The propulsion module circuit breaker panel controls all electrical power to the operator's cab. The various circuit breakers control all circuitry or selected portions of circuitry to the operator's cab. Table 2-7 describes each control or indicator and its corresponding function.

Table 2-7. Propulsion Module Circuit Breaker Panel.

Item	Control/Indicator	Position/Function
1	MAIN Circuit Breaker	Up (On)/Down (Off) - Controls all electrical power distribution.
2	ENGINE Circuit Breaker	Up (On)/Down (Off) - Controls electrical power to operator's cab for engine START/STOP switches port and starboard (located on Middle Control Panel).
3	VENT FAN Circuit Breaker	Up (On)/Down (Off) - Controls electrical power to operator's cab for Vent Fans switches port and starboard (located on Lower Control Panel).
4	ALARMS Circuit Breaker	Up (On)/Down (Off) - Controls electrical power to operator's cab for Alarm System switches port and starboard (located on Middle and Lower Control Panels).
5 - 10	#1 through #6 BILGE PUMP(s) Circuit Breaker(s)	Up (On)/Down (Off) - Controls electrical power to operator's cab for Bilge Pumps, 6 total (located on Lower Control Panel).
11	OPR CAB Circuit Breaker	Up (On)/Down (Off) - Controls electrical power to panels in operator's cab, except for engine power (see engine power switch Item 2 of this table).
12	CLUTCH Circuit Breaker	Up (On)/Down (Off) - Controls electrical power to operator's cab for port and starboard clutch engagement switches (located on Lower Control Panel).
13	THRUSTER Circuit Breaker	Up (On)/Down (Off) - Controls electrical power to operator's cab for port and starboard Pump-Jet/Thruster control switches (located on Middle Control Panel).
14	THRUSTER INDICATOR Circuit Breaker	Up (On)/Down (Off) - Controls electrical power to operator's cab for port and starboard Pump-Jet/Thruster direction indicators (located on Middle Control Panel).

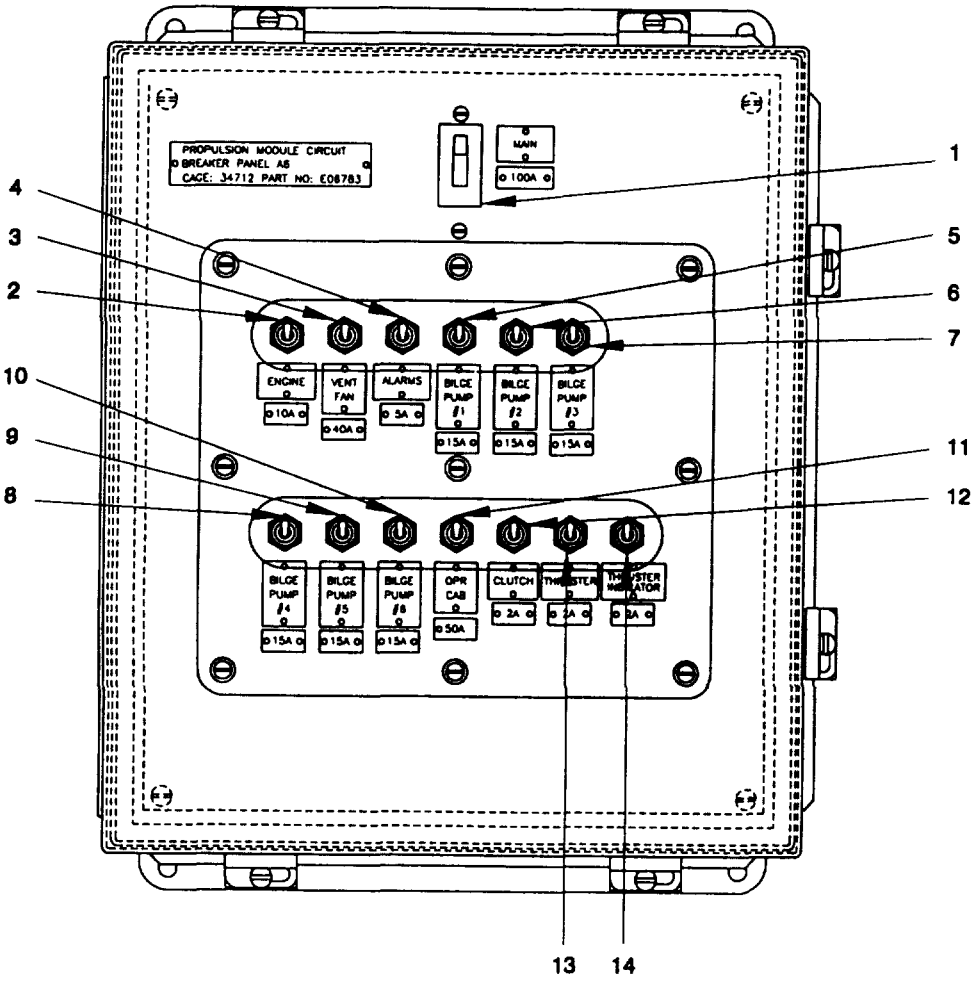

Figure 2-9. Propulsion Module Circuit Breaker Panel (A6).

2-3.1.3 Engine Junction Box Assembly (A4). The diesel Engine Junction Box Assembly (A4) (Figure 2-10) is located in the machinery compartment. Table 2-8 describes the control and its corresponding function.

Table 2-8. Engine Junction Box Assembly (A4).

Item	Control/Indicator	Function
1	Engine EMERGENCY STOP (Red) Push Button	When depressed, closes air shut-off valve to eliminate air supply to engine, stopping engine. This should only be used in extreme emergency

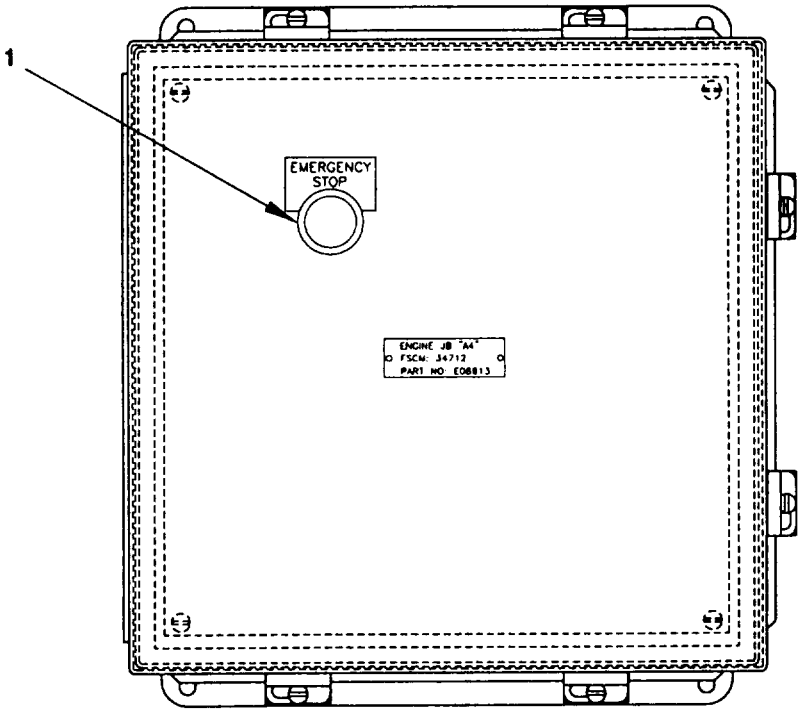

Figure 2-10. Engine Junction Box Assembly (A4).

2-3.1.4 Bilge Pump Control Assembly (A5). The bilge pump control panel assembly (Figure 2-11) in the machinery compartment allows local operation of five pumps in the machinery compartment, or operation of the same pumps from the cab. Table 2-9 describes each control or indicator and its corresponding function.

Table 2-9. Machinery Compartment Bilge Pump Control Panel.

Item	Control/Indicator	Function
1	BILGE PUMP #2 Toggle Switch	TEST/REMOTE - TEST allows momentary, local operation of bilge pump #2 in machinery compartment. REMOTE allows operation of same from Cab.
2	BILGE PUMP #3 Toggle Switch	TEST/REMOTE - TEST allows momentary, local operation of bilge pump #3 in machinery compartment. REMOTE allows operation of same from Cab.
3	BILGE PUMP #4 Toggle Switch	TEST/REMOTE -TEST allows momentary, local operation of bilge pump #4 in machinery compartment. REMOTE allows operation of same from Cab.
4	BILGE PUMP #5 Toggle Switch	TEST/REMOTE -TEST allows momentary, local operation of bilge pump #5 in machinery compartment. REMOTE allows operation of same from Cab.
5	BILGE PUMP #6 Toggle Switch	TEST/REMOTE -TEST allows momentary, local operation of bilge pump #6 in machinery compartment. REMOTE allows operation of same from Cab.

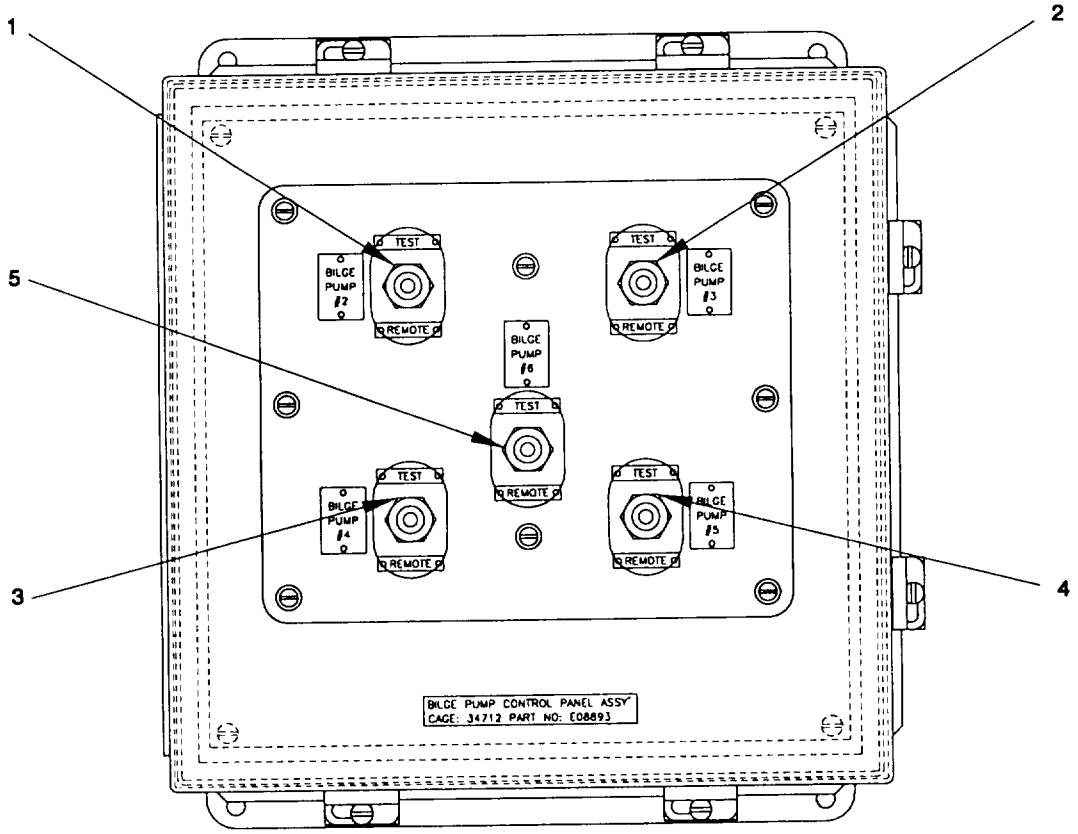

Figure 2-11. Bilge Pump Control Assembly (A5).

2-3.1.5 Single Bilge Pump Control Assembly (A7). The single bilge pump control (Figure 2-12) allow local operation of one pump in the lazaret, or operation of the same pump from the cab. Table 2-10 describes the control and its corresponding function.

Table 2-10. Single Bilge Pump Control.

Item	Control/indicator	Function
1	BILGE PUMP #1 Toggle Switch	TEST/REMOTE - TEST allows momentary, local operation of bilge pump in the lazaret. REMOTE allows operation of same from Cab.

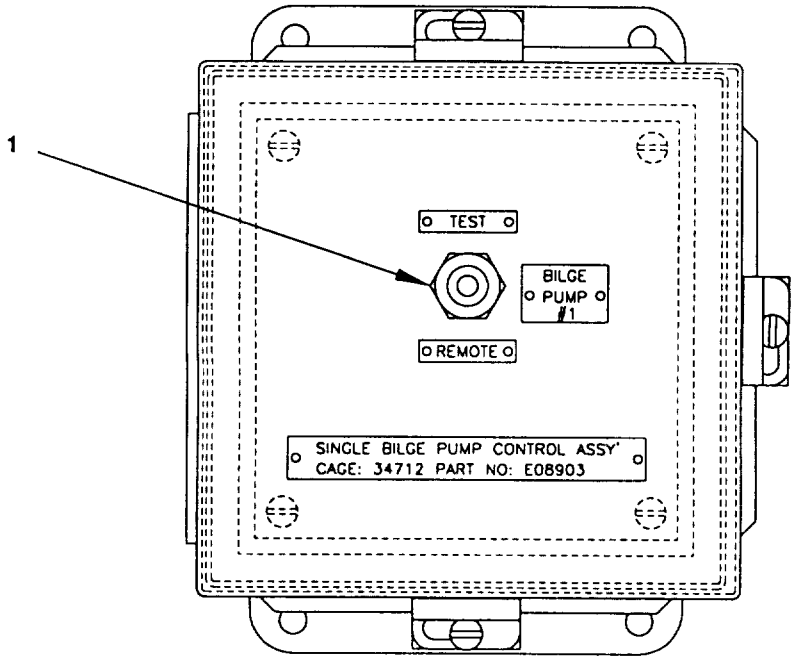

Figure 2-12. Single Bilge Pump Control Assembly (A7).

2-3.2 Hydraulic Steering System Indicators. The hydraulic steering system indicators (Figure 2-13) are located on the hydraulic reservoir in the machinery compartment. Table 2-11 describes each control or indicator and its corresponding function.

NOTE

Refer to Paragraph 2-4, Emergency Controls and Indicators, for further identification of controls and indicators associated with the hydraulic system.

Table 2-11. Hydraulic System Controls and Indicators.

Item	Control/Indicator	Function
1	Sight Gauge	Indicates the level of hydraulic fluid in the storage reservoir.
2	Dirt Indicator, Return Filter	Indicates that when the arrow is in the red zone that the hydraulic reservoir fluid filter is dirty and needs replacing.

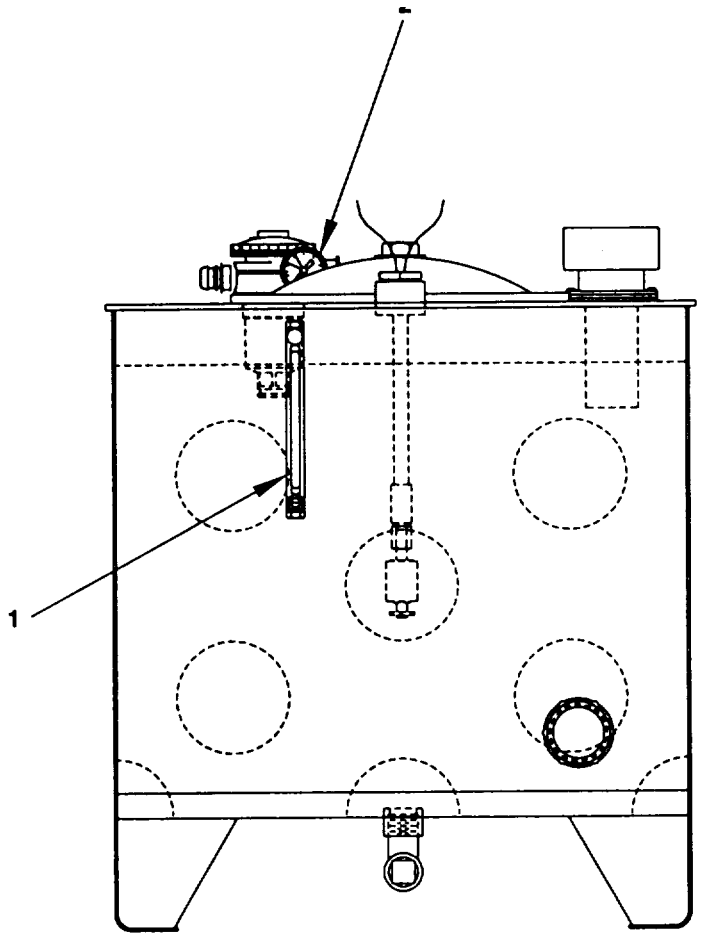

Figure 2-13. Hydraulic Steering System Indicators.

2-3.3 Fuel System Controls. The fuel system controls and indicators (Figure 2-14) are located in the fuel compartment at the aft end of the powered module. Table 2-12 describes each control or indicator and its corresponding function.

Table 2-12. Fuel System Controls and Indicators.

Item	Control/Indicator	Function
1	Sight Gauge	Indicates level of fuel in fuel tank.
2	Fuel Ball Valve (Supply)	Allows fuel to be transferred to the diesel engine.
3	Fuel Ball Valve (Return)	Allows return of unused fuel back into fuel tank.

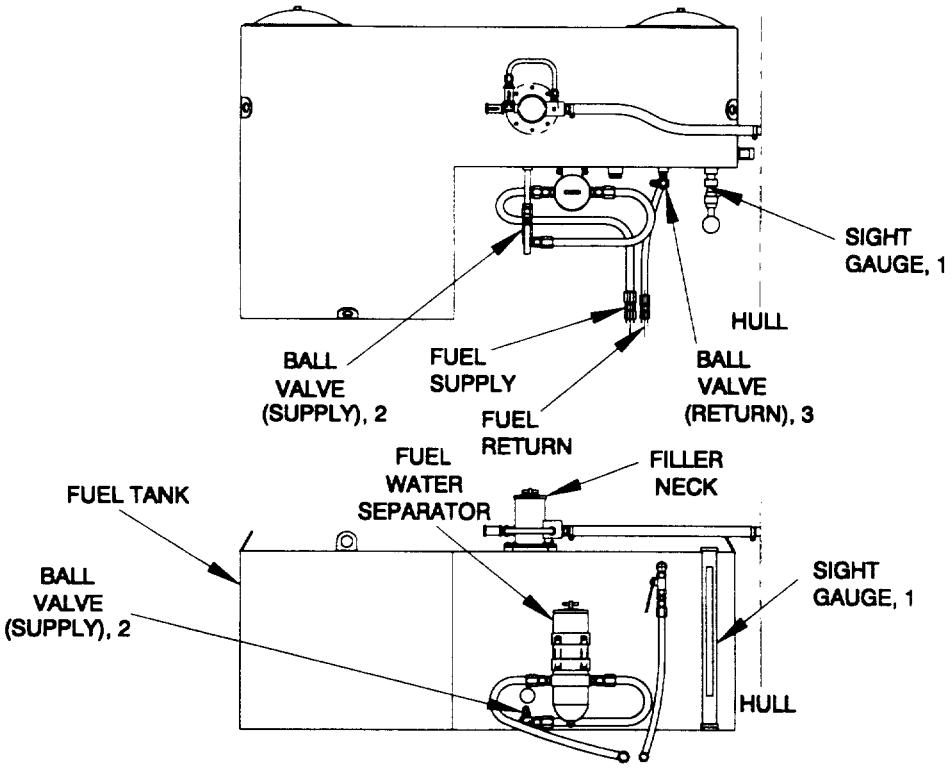

Figure 2-14. Fuel System Controls.

2-3.4 Raw Water System Controls. The raw water system controls and indicators (Figure 2-15) are located in the machinery compartment. Table 2-13 describes each control or indicator and its corresponding function.

Table 2-13. Raw Water System Controls and Indicators.

Item	Control/Indicator	Function
1	Duplex Strainer Valve	Selects between two strainer baskets. This allows on-the-run changing of strainers if one strainer becomes clogged. In center position, water is drawn through both at the same time.
2	Sea Chest Butterfly Valve	When in the OPEN position, allows sea water to be drawn from the sea chest into the raw water cooling system.
3	Raw Water System Exhaust Valve	Allows the flow of raw water into the exhaust system.
4	Raw Water System Transfer Case Valve	Allows the flow of raw water into the transfer case.
5	Exhaust Port Flapper Latch	Holds flapper closed when Powered Module is not in use.

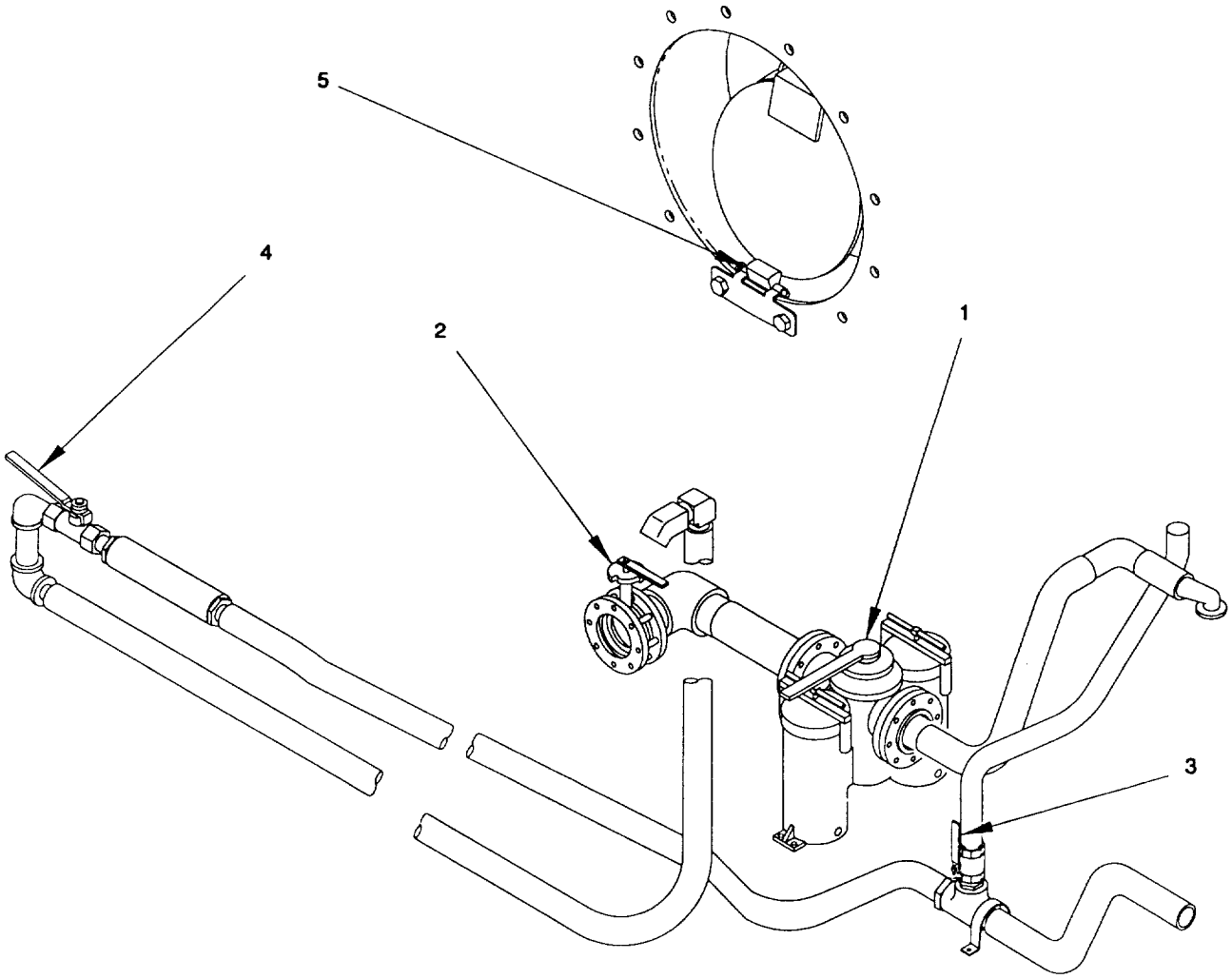

Figure 2-15. Raw Water System Controls.

2-4 EMERGENCY CONTROLS AND INDICATORS. This paragraph locates and describes emergency controls and indicators (Figure 2-16). Some controls and indicators have been previously cited and are repeated in this section for rapid location and emphasis of their usage during an emergency situation.

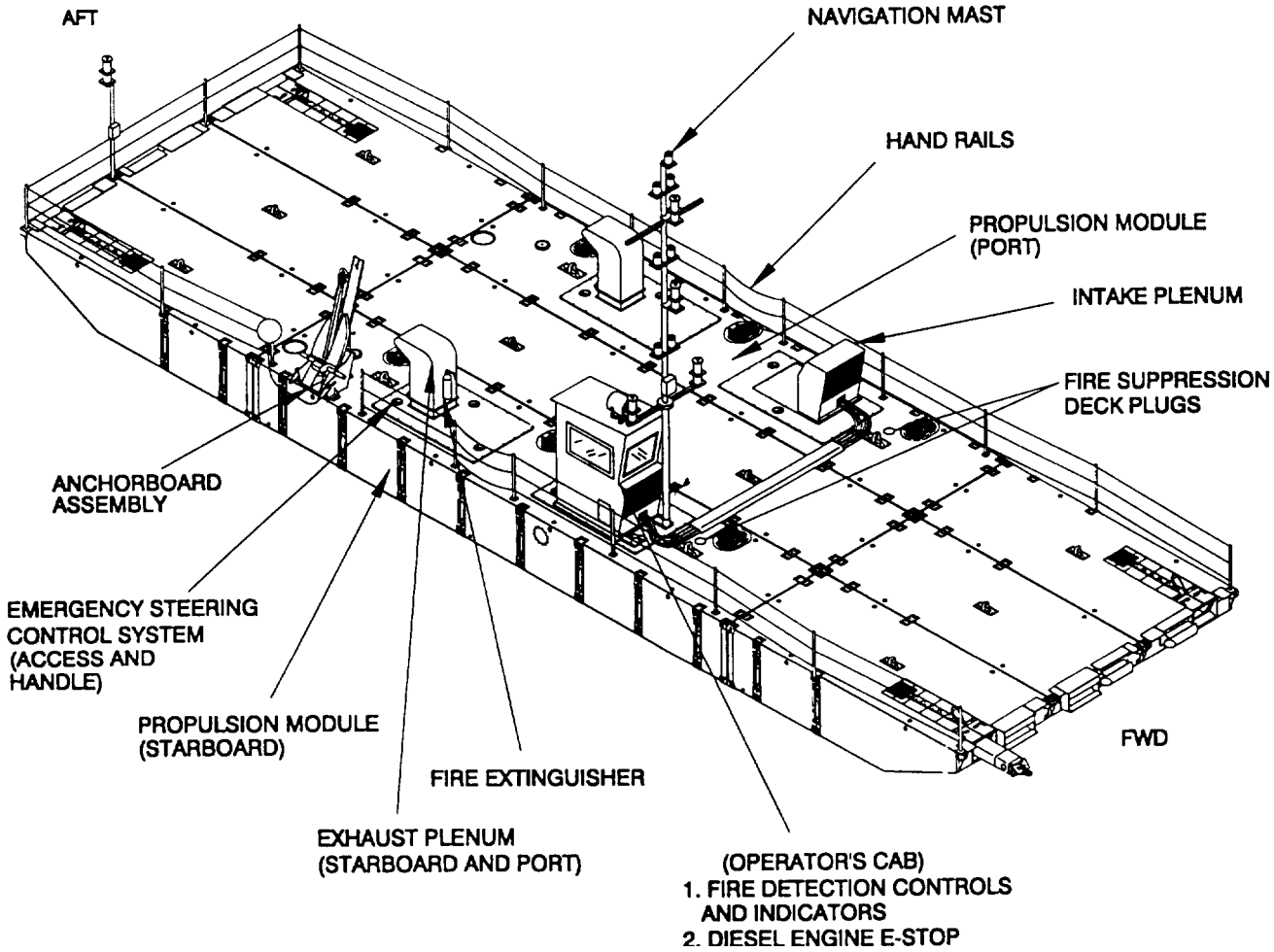

Figure 2-16. Emergency Controls and Indicators (Sheet 1 of 2).

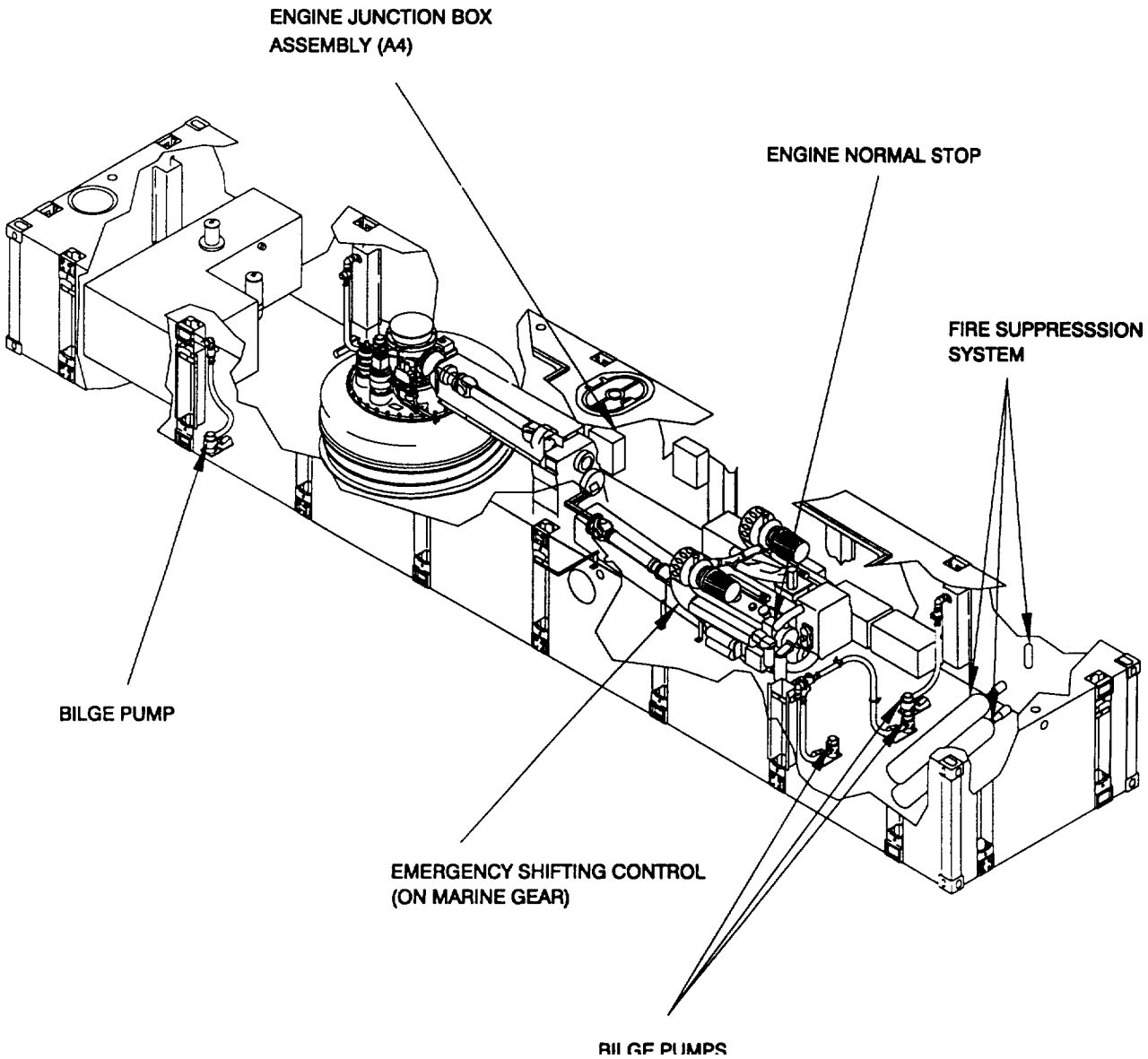

Figure 2-16. Emergency Controls and Indicators (Sheet 2 of 2).

2-4.1 Anchorboard Assembly Controls and Indicators. The anchorboard assembly contains a 1500 pound emergency anchor (Figure 2-17) mounted on the starboard side of the powered module with a buoy attached. If there is a loss of power or any other condition that makes the MCF unsteerable, the anchor can be deployed. Table 2-14 describes each control or indicator and its corresponding function.

Table 2-14. Anchorboard Assembly Controls and Indicators.

Item	Control/Indicator	Function
1	Locking Chains	Two chains lock ramp extensions in up (stowed) position preventing accidental deployment. When chains are lifted from holding brackets, ramps are free to fall down and forward to deploy anchor.
2	Release Lanyard	Pull to actuate the hook release and anchor will immediately deploy.
3	Marker Buoy	Attached to the anchor when deployed, marks the anchor's location for retrieval.

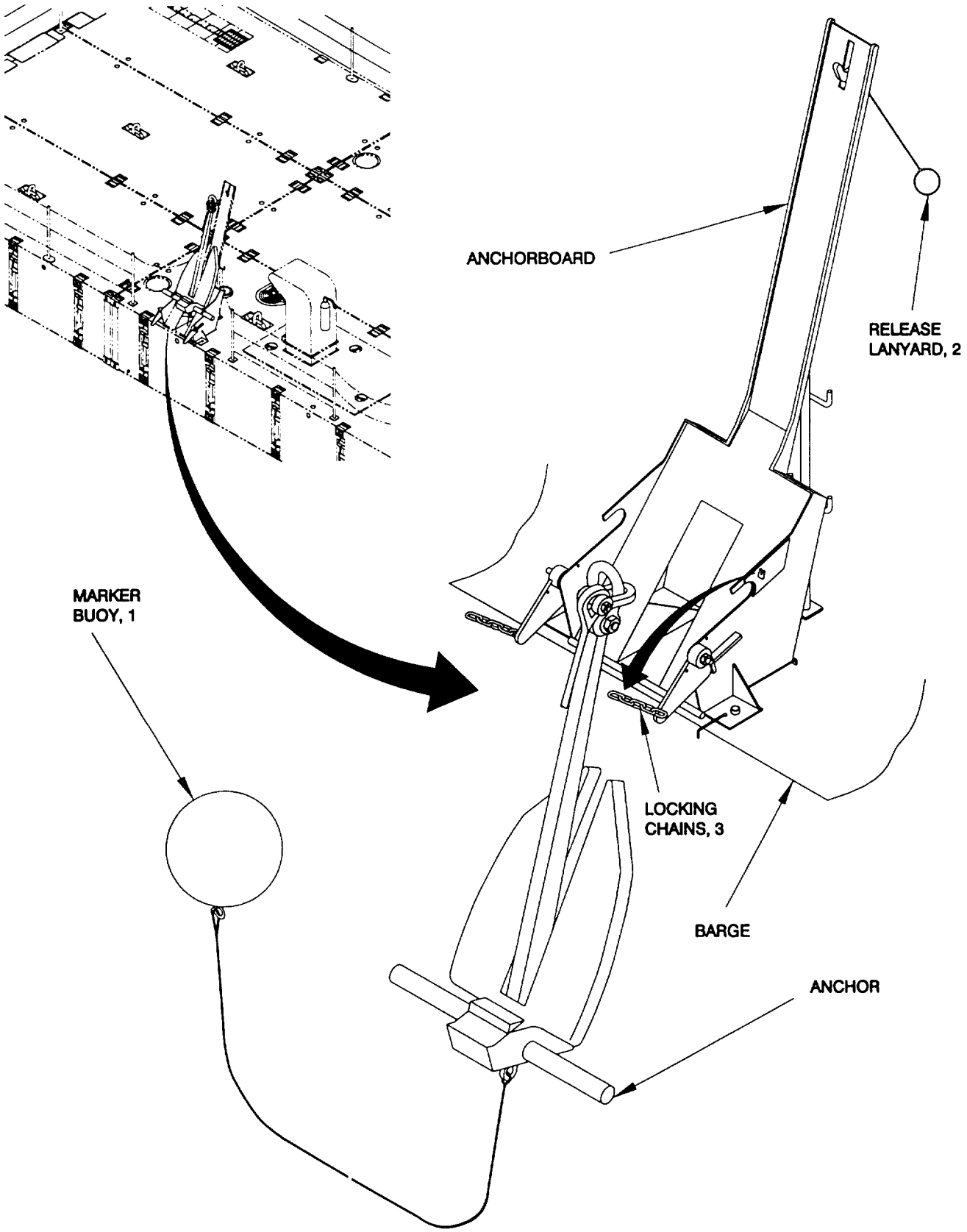

Figure 2-17. Anchorboard Assembly Emergency Anchor.

2-4.2 Fire Detection System Controls and Indicators. The fire detection system (Figure 2-18) consists of two thermal detectors with thermal switches that close when the ambient temperature reaches 225° F in each propulsion module. One is mounted through the bulkhead behind the pump-jet to monitor the fuel compartment. The other one is mounted below the deck to monitor the machinery compartment. There is no thermal detector in the lazaret compartment. On the Terminal Strip (A4), the fire alarm horn speaker will sound. The lower control panel has a PORT FIRE ALARM and STBD FIRE ALARM red indicator lights. Table 2-15 describes each control or indicator found in the operator's cab and its corresponding function.

Table 2-15. Fire Detection System Controls and Indicators.

Item	Control/indicator	Function
1	ALARM, Horn	Horn sounds when thermal detectors sense ambient temperature of 225° F in either propulsion module.
2	PORT FIRE ALARM, Indicating Light (Red)	Illuminates when port side thermal detector senses 225° F.
3	PORT FIRE ALARM/SILENCE/TEST, Toggle Switch	**WARNING** **DO NOT operate MCF with switch in SILENCE position during normal operations.** Audible alarm (horn) indicates below deck temperature above 225° F or possible onboard fire in port propulsion module. ALARM = Horn sounds and RED light ON in operator's cab. SILENCE = Alarm Horn silenced, RED light remains ON TEST (momentary) = Alarm Horn sounds and RED light ON. Reset to ALARM when normal conditions exist.
4	STBD FIRE ALARM, Indicating Light (Red)	Illuminates when port side thermal detector senses 225' F.
5	STBD FIRE ALARM/SILENCE/TEST, Toggle Switch	**WARNING** **DO NOT operate MCF with switch in SILENCE position during normal operations.** Audible alarm (horn) indicates below deck temperature above 225° F or possible onboard fire in starboard propulsion module. ALARM = Horn sounds and RED light ON in operator's cab. SILENCE = Alarm Horn silenced, RED light remains ON. TEST (momentary) = Alarm Horn sounds and RED light ON. Reset to ALARM when normal conditions exist.

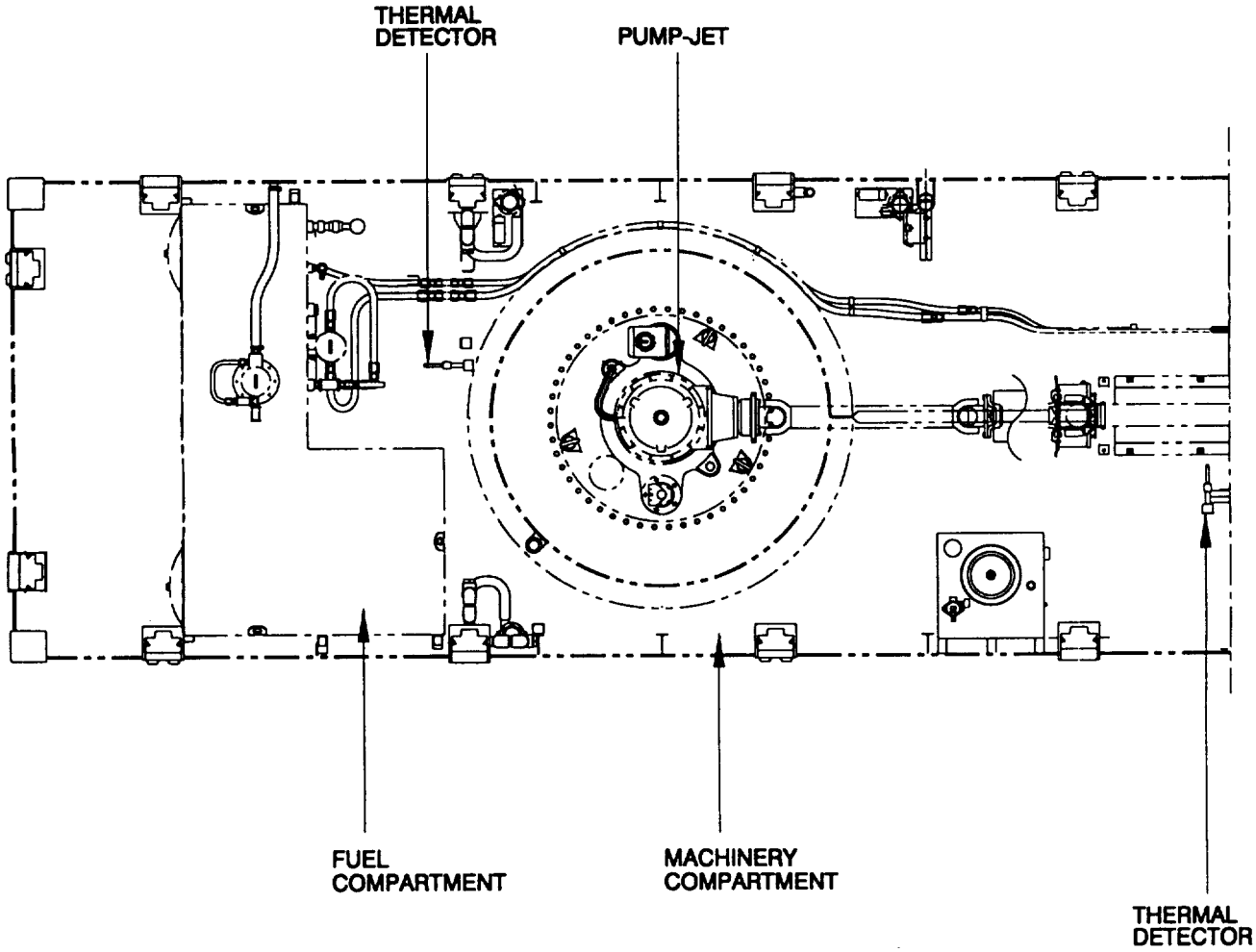

Figure 2-18. Fire Detection Controls and Indicators (Sheet 1 of 2).

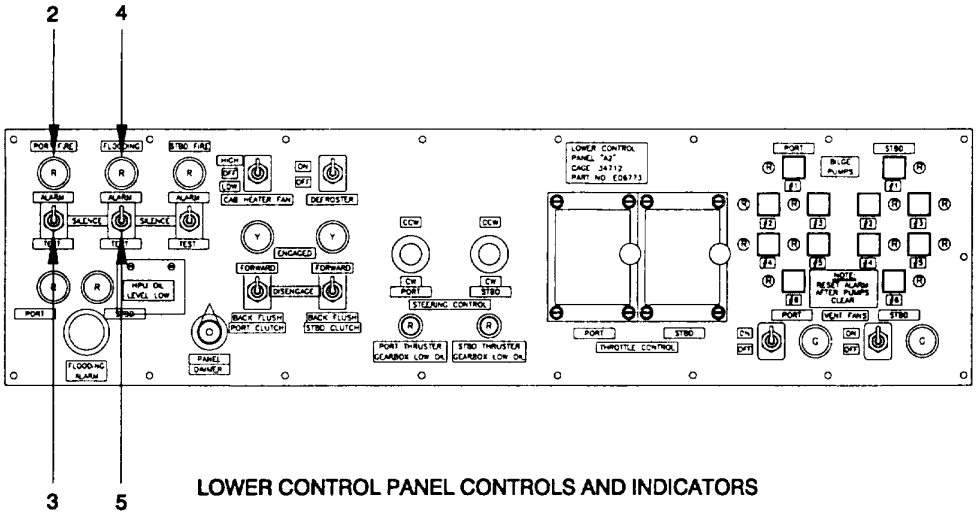

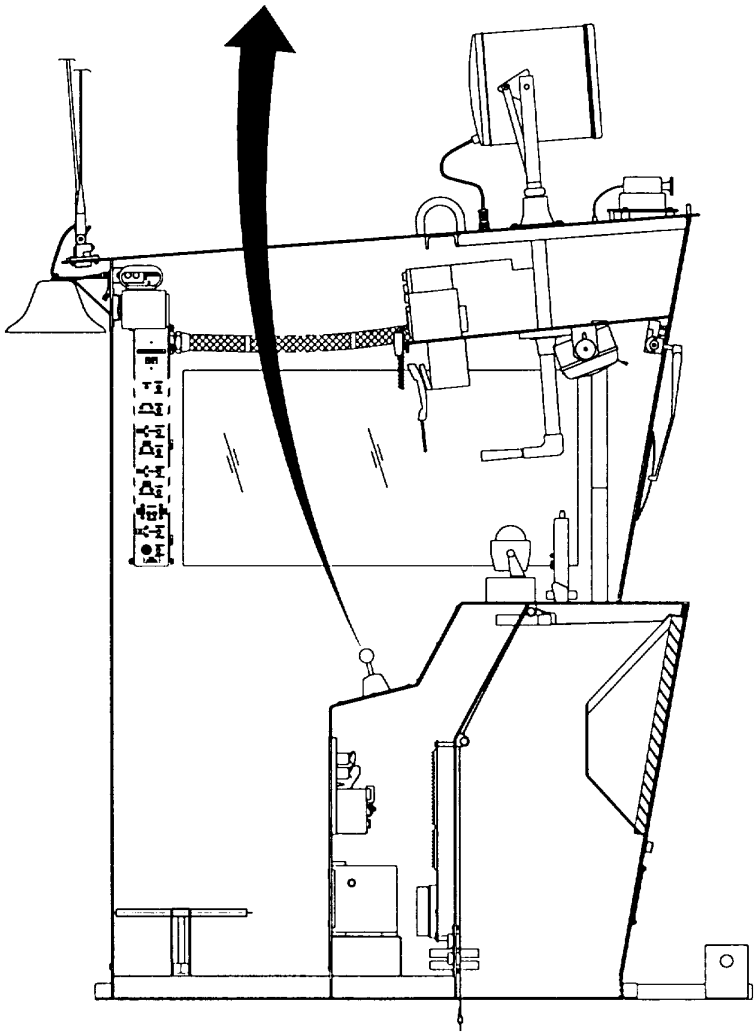

Figure 2-18. Fire Detection Controls and Indicators (Sheet 2 of 2).

2-4.3 Fire Suppression System Controls and Indicators. The fire suppression system (Figure 2-19) is designed to flood the engine and pump-jet compartment and the fuel storage compartment with Carbon Dioxide (CO_2) on the propulsion module units if fire breaks out. Primary system activation is accomplished using a remote cable pull box recessed in the deck located directly in front of the access hatch and forward of the operator's cab. Manual release is also provided in the lazaret where the agent is not dispersed. Manual release levers located below deck is found on the upper 50# bottle. When any of the fire suppression controls are manually pulled, four events occur:

a) Activates fixed time delayed CO_2 fire suppression system that 30 seconds later discharges into propulsion module to suffocate fire.
b) Cable disconnects from intake plenum inner vent cover causing it to close and shutoff oxygen sources.
c) Cable action shuts off relay for exhaust fan in exhaust plenum.
d) Activates pressure trip mechanism to shut off diesel engine.

The Table 2-16 describes each control or indicator and its corresponding function.

WARNING

Once the siren has sounded, anyone located below deck has approximately 30 seconds to get topside before the fixed CO_2 fire suppression system floods the propulsion module compartments with CO_2 and suffocates the fire. Failure to do so could result in serious injury or death to crew members below deck.

Table 2-16. Fire Suppression System Controls and Indicators.

Item	Control/Indicator	Function
1	Remote Cable Pull Box	Pull lever, fire suppression system activated, 30 seconds later CO_2 will discharge.
2	Control Head Lever, Time Delay	Pull pin, pull lever (does not activate fire suppression system) 30 with Safety Pin second time delay function is bypassed.
3	Control Head Lever, 50# Bottle with Safety Pin	Pull pin, pull lever, fire suppression system activated, 30 seconds later CO_2 will discharge.
4	Alarm Siren	Siren in machinery compartment activated by CO_2 pressure.
5	Pressure Switch	Senses pressure and actuates engine Emergency stop. Must be manually reset when normal conditions exist.
6	Air Intake Plenum	CO_2 pressure automatically actuates the pressure trip mechanism to close vent flap. Vent flap must be manually reset to open position before resuming normal operation
7	Exhaust Plenum Vent Control Handle	Place handle in CLOSE position to shut off oxygen source.
8	Portable Fire Extinguisher	Located on the exhaust plenum, point nozzle at base of flame, remove lock pin, and squeeze handle

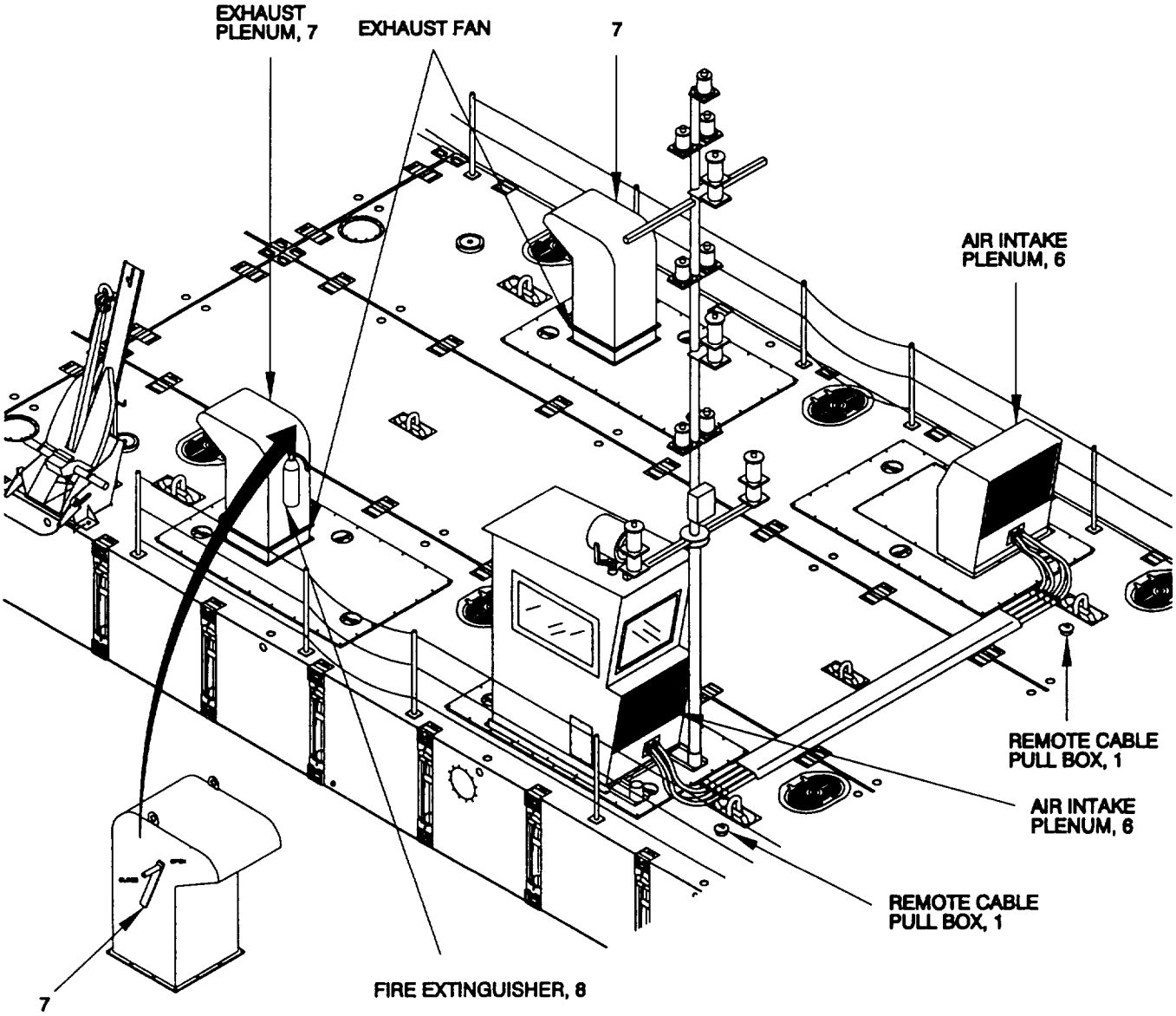

Figure 2-19. Fire Suppression Controls and Indicators (Sheet 1 of 4).

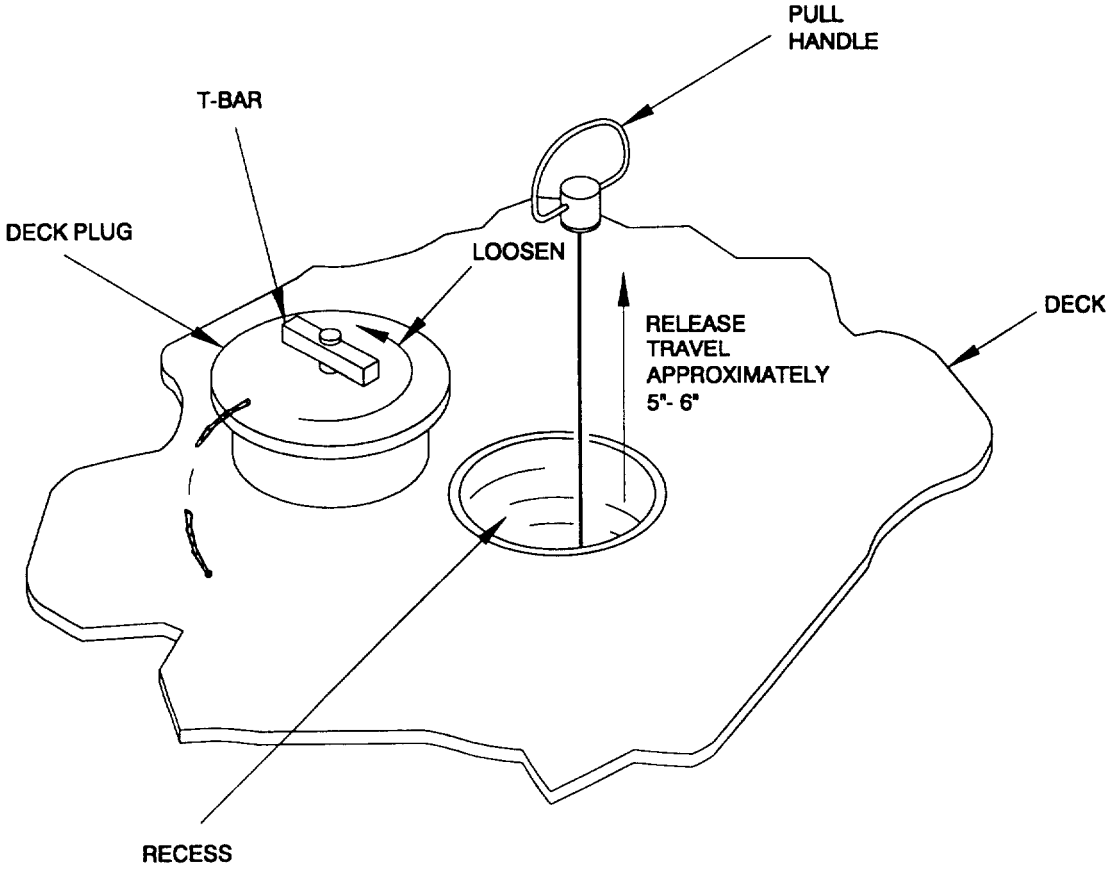

Figure 2-19. Fire Suppression Controls and Indicators (Sheet 2 of 4).

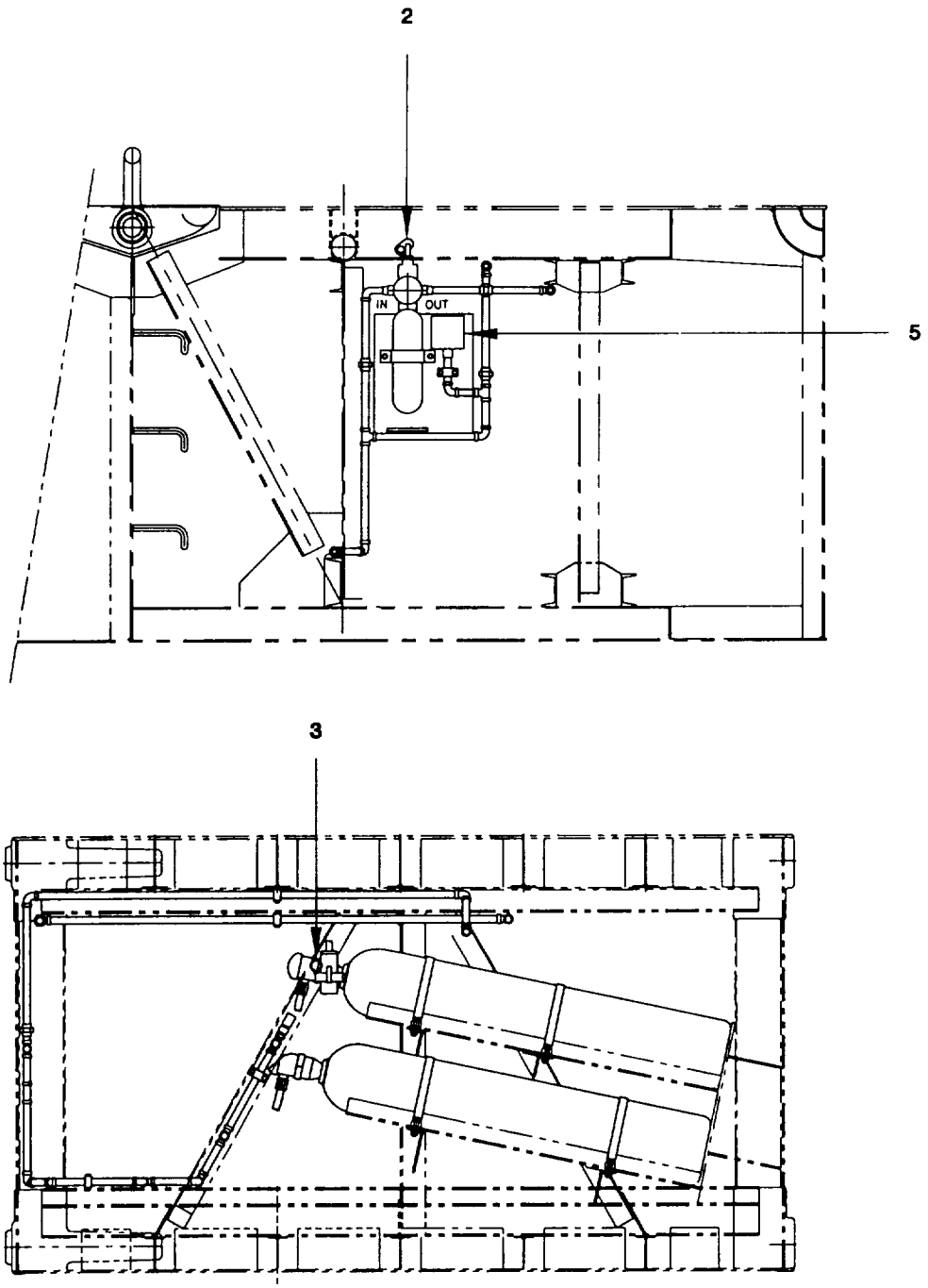

Figure 2-19. Fire Suppression Controls and Indicators (Sheet 3 of 4).

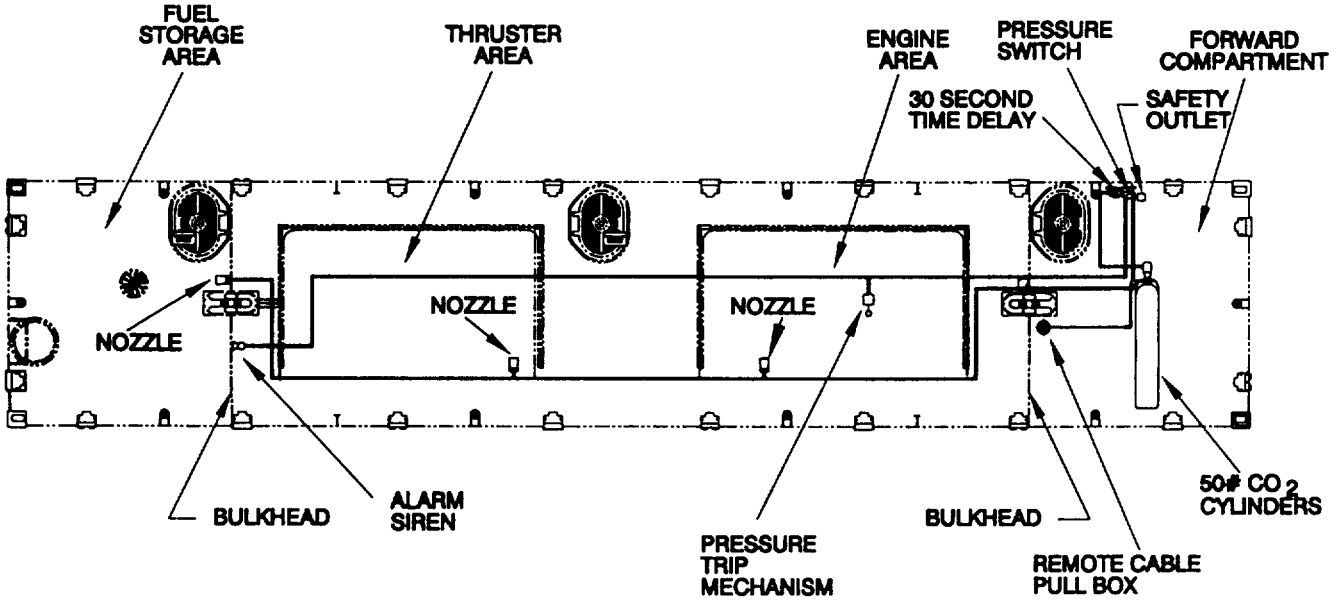

Figure 2-19. Fire Suppression Controls and Indicators (Sheet 4 of 4).

2-4.4 Diesel Engine Emergency stop Controls. The diesel engine Emergency stop controls (Figure 2-20) are located in the machinery compartment and in the operator's cab. The Table 2-17 describes each control or indicator and its corresponding function.

Table 2-17. Diesel Engine Emergency Stop Controls.

Item	Control/Indicator	Function
1	Emergency Stop - Engine Junction Box Assembly (A4).	**CAUTION** **DO NOT press engine emergency stop during normal operation. This action shuts off air to the engine. Failure to comply will result in serious damage to the engine.** **NOTE** **The engine emergency stop is automatic when the fire suppression system is actuated or on an overspeed condition.** **NOTE** **The air manifold intake flapper door must be manually reset by moving reset lever downward when normal conditions resume** When red push button is depressed, the air shut-off valve closes, stopping engine.
2	(Emergency) Normal Push Button, Diesel Engine	When red push button located on right-front of diesel engine is depressed, it closes the air shut-off valve, stopping engine.
3	EMERgency STOP Push Button, Middle Control Panel	**CAUTION** **DO NOT press engine emergency stop during normal operation. This action shuts off air to the engine. Failure to comply will result in serious damage to the engine.** **NOTE** **The engine emergency stop is automatic when the fire suppression system is actuated or on an overspeed condition.** **NOTE** **The air manifold intake flapper door must be manually reset by moving reset lever downward when normal conditions resume (see figure 2-20).** (Port and Starboard) When red push button is depressed, it closes the air shut-off valve, stopping engine.

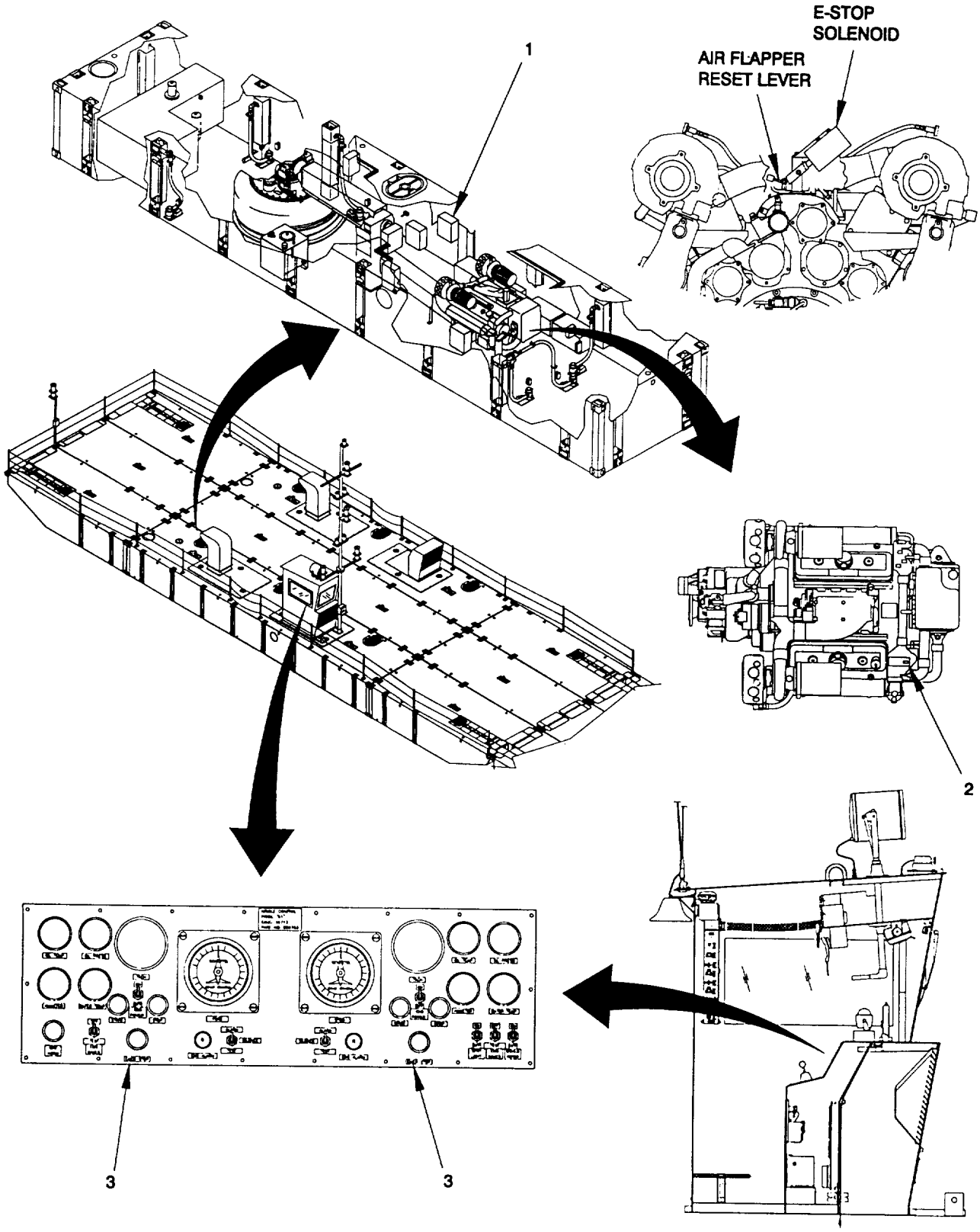

Figure 2-20. Diesel Engine Emergency Stop Locations.

2-4.5 Bilge Pump System Controls and Indicators. The bilge pump system controls and indicators (Figure 2-21). A total of six bilge pumps in each propulsion module (five in the machinery compartment, one in the lazaret) are capable of pumping 3,700 gph in the event the propulsion module takes on water. None are found in the fuel compartment. Table 2-18 describes each control or indicator and its corresponding function.

Table 2-18. Bilge Pump System Controls and Indicators.

Item	Control/Indicator	Function
1	FLOOD ALARM, Indicating Light (Red)	Illuminates when bilge pump(s) float switch(es) is/are actuated. Illuminates until bilge pump float switch(s) is/are de-activated indicating dry bilges.
2	FLOODING ALARM/SILENCE/TEST, Toggle Switch	**WARNING** **DO NOT operate MCF with switch in SILENCE position during normal operations.** Audible alarm (pulse beeper) indicates possible flooding in port or starboard propulsion module. ALARM = Pulse beeper sounds and RED light ON in operator's cab. SILENCE = Pulse beeper sound silenced, RED light ON. TEST (momentary) = Alarm Pulse beeper sounds and RED light ON. Reset to ALARM when normal conditions exist.
3	PORT BILGE PUMP(s), Indicating Light(s), (Red)	Light(s) will illuminate indicating flooded bilge location(s) within the port side propulsion module via activated bilge pump float switch(es).
4	STBD BILGE PUMP, Indicating Light(s) (Red) switch(es).	Light(s) will illuminate indicating flooded bilge location(s) within the stbd propulsion module via activated bilge pump float
5	PORT BILGE PUMP Indicator/Switch(es) with Green Light(s)	Controls operation of bilge pumps in port propulsion module, illuminates when depressed indicating each pump is working. Allows any bilge pump to be energized that has a RED illuminated FLOOD location light.
6	STBD PORT BILGE PUMP Indicator/Switch(es) with Green Light(s) .	Controls operation of bilge pumps in starboard propulsion module, illuminates when depressed indicating each pump is working. Allows any bilge pump to be energized that has a RED illuminated FLOOD location light

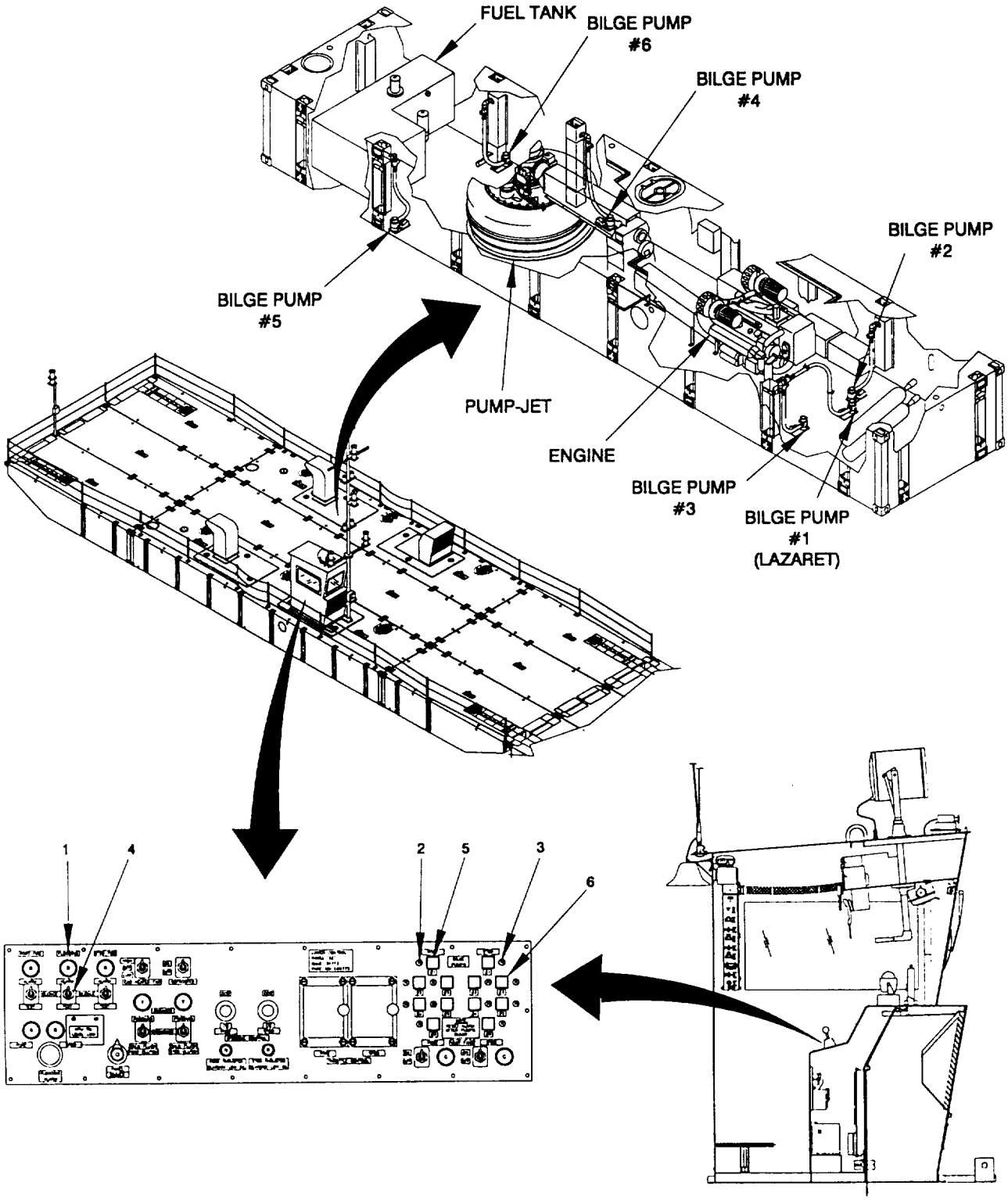

Figure 2-21. Bilge Pump System Controls and Indicators.

2-4.6 Emergency Shifting and Steering Controls and Indicators. If a MCF power module loses hydraulic and electrical power, there are emergency controls (Figure 2-22) available for manual shifting and steering. Table 2-19 describes each control or indicator and its corresponding function.

Table 2-19. Emergency Shifting and Steering Controls and Indicators.

Item	Control/Indicator	Function
1	Needle Valve	Normally closed, this valve opens to allow manual steering with the portable tiller arm.
2	Way Valve	Allows manual override of steering controls engine.
3	3/2 Ball Valve	Accommodates hand pump by shutting off rest of system so hydraulic pressure generated by the hand pump goes directly to the hydraulic brake.
4	Hand Pump	Generates the hydraulic pressure to release the pump-jet hydraulic brake.
5	Feedback Unit	Mechanical link to the pump-jet nozzle and allows operator of steering handle assembly to observe positioning of pump-jet nozzle as it is being rotated.
6	Emergency Steering Handle	Found in lazaret compartment, this handle assembly is fitted with a Assembly socket for the 1.5 square head on the top of the pump-jet steering motor so that the directional Pump-Jet/Thruster nozzle can be manually positioned clockwise or counter-clockwise in the event power is interrupted.
7	Emergency Shifting Block for Selector Valve	On marine gear, if electronic solenoid for either FORWARD or BACKFLUSH clutching becomes inoperative, it can be replaced with the emergency shifting block to open the required port, allowing hydraulic pressure flow to engage the clutch.

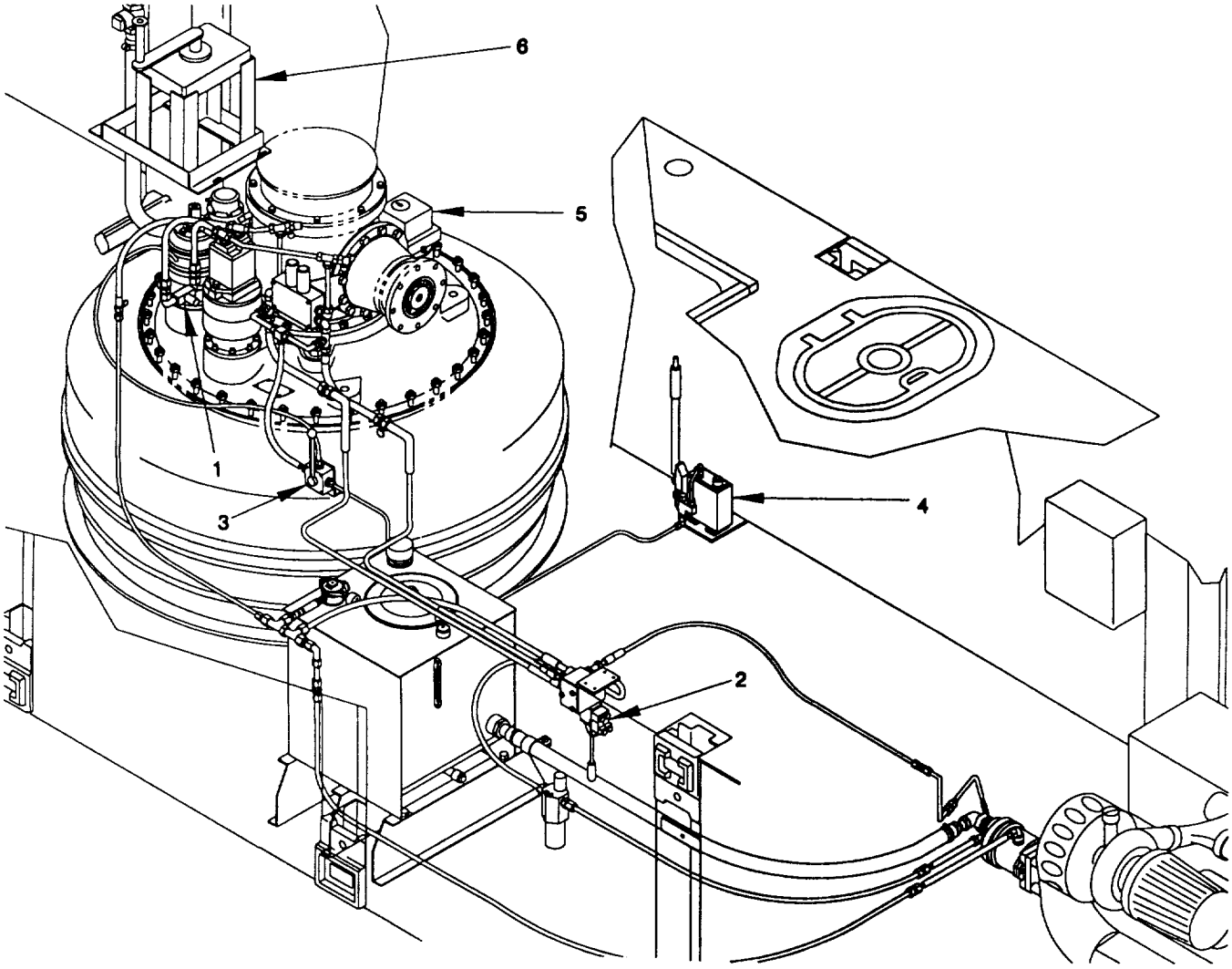

Figure 2-22. Emergency Shifting and Steering Controls and Indicators (Sheet 1 of 2).

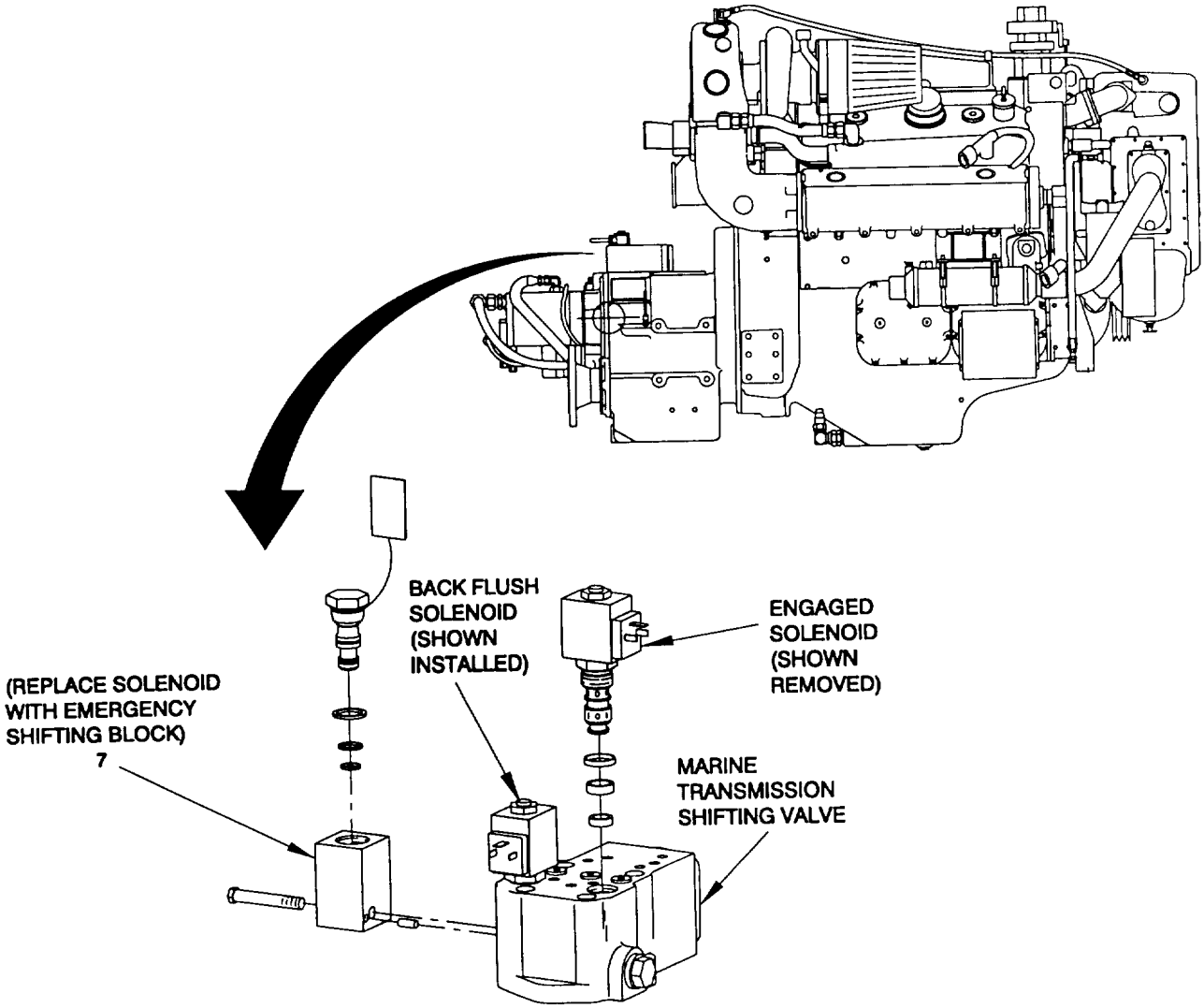

Figure 2-22. Emergency Shifting and Steering Controls and Indicators (Sheet 2 of 2).

Section II. Preventive Maintenance Checks and Services (PMCS).

2-5 INTRODUCTION. To ensure that the Modular Causeway Ferry (MCF) is ready for operation at all times, it must be inspected on a regular basis so that defects may be found before they result in serious damage, equipment failure, or injury to personnel. This section contains only those checks and services authorized by the watercraft operator through the Maintenance Allocation Chart (MAC) under "inspection" and "service" functions. When performing PMCS, read and follow all safety instructions found in the Warning Summary at the front of this manual. All Warning and Cautions shall be followed. Figure 2-23 is a routine diagram which gives an overview of the areas covered in the PMCS Table 2-20.

2-5.1 General PMCS Procedures.

a. Keep equipment clean. Dirt, oil and debris may cover up a serious problem. Clean as you work and as needed.

b. While performing specific PMCS procedures, routinely check the following components:

1) Bolts, Nuts and Screws. Verify that they are not loose, missing, bent or broken. Report deficiencies to unit maintenance.

2) Welds. Inspect for loose, chipped paint, rust or cracks a round welds. Report deficiencies found to unit maintenance.

3) Electric Conduit, Wires or Connectors. Inspect for cracked, broken or frayed insulation, bare wires and loose or broken connectors. Report deficiencies to unit maintenance.

4) Hoses, Lines and Fittings. Inspect for wear, damage and leaks. Verify that clamps and fittings are tight. Report deficiencies to unit maintenance.

5) Deterioration. Visually inspect for chipped, cracked or flaking paint, rust or corrosion. Report deficiencies to unit maintenance.

2-5.2 PMCS Procedures.

a. Operator/Crew PMCS are provided in Table 2-20. If the PMCS is performed in the order listed it will become a routine habit and the person responsible is less likely to omit a function.

b. Before starting PMCS, read all the checks required for the applicable interval and prepare any tools required.

c. If any deficiencies are discovered during PMCS perform the required task. If any component or system is not serviceable, or if given service does not correct the problem notify your supervisor.

d. The columns in Table 2-20 are defined as follows.

1) Item No. Column provides a logical sequence for PMCS to be performed and is used as a source of item numbers for the "TM ITEM NO" column when recording PMCS results on DA Form 2404.

2) Interval. Column specifies when the PMCS is to be performed.

3) Location. System location where task is to be performed.

4) Item to Check/Service. Column lists the item which is to be checked or serviced.

5) Procedure. Column instructs what is to be performed to complete the PMCS.

6) Not Fully Mission Capable if: Column briefly states reason the MCF is not mission capable.

2-5.3 Reporting Repairs. All defects which are not classified as Operator/Crew or that cannot be corrected immediately must be reported on a DA Form 2404, Equipment Inspection and Maintenance Work Sheet or the appropriate maintenance level. If a serious problem is found, IMMEDIATELY report it to your supervisor.

2-5.4 Leakage Definitions. It is important to know how fuel leakage affects the status of the servicing unit. Listed below are the types/classes of leakage an operator must know to determine whether the MCF is mission capable.

a. Class I. Seepage of fluid (as indicated by wetness or discoloration) not great enough to form drops.

b. Class II. Leakage of fluid great enough to form drops, but not great enough to cause drops to drip from item being inspected.

c. Class III. Leakage of fluid great enough to form drops that fall from item being inspected.

CAUTION

When operating with Class I or II leaks, continue to check fluid levels in addition to that required in PMCS.

d. Equipment operation is allowed with minor Class I or II leakage. Fluid levels in an item/system affected with such leakage must be checked more frequently than required in PMCS. Report Class III leaks IMMEDIATELY to your supervisor.

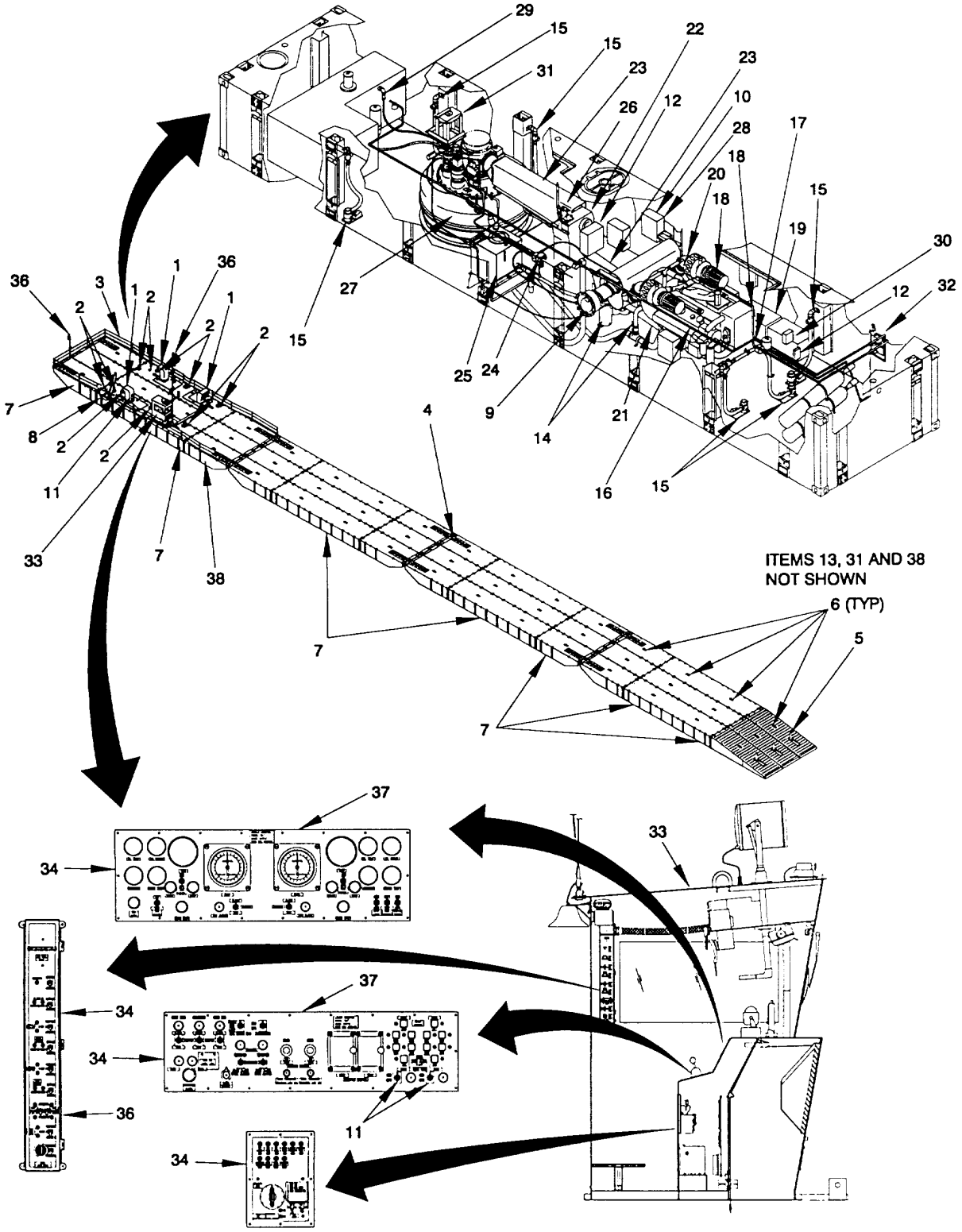

Figure 2-23. MCF PMCS Routine Diagram.

Table 2-20. Operator/Crew Preventive Maintenance Checks and Services (PMCS)

ITEM NO.	INTERVAL	LOCATION ITEM TO CHECK/ SERVICE	PROCEDURE	NOT FULLY MISSION CAPABLE IF:
1	Before	Intake and Exhaust Plenums	Insure plenums are secured to deck, electrical interconnection cable is attached to intake plenum, exhaust fan power cables are connected and exhaust door handles are in the OPEN position. Check for loose hardware.	

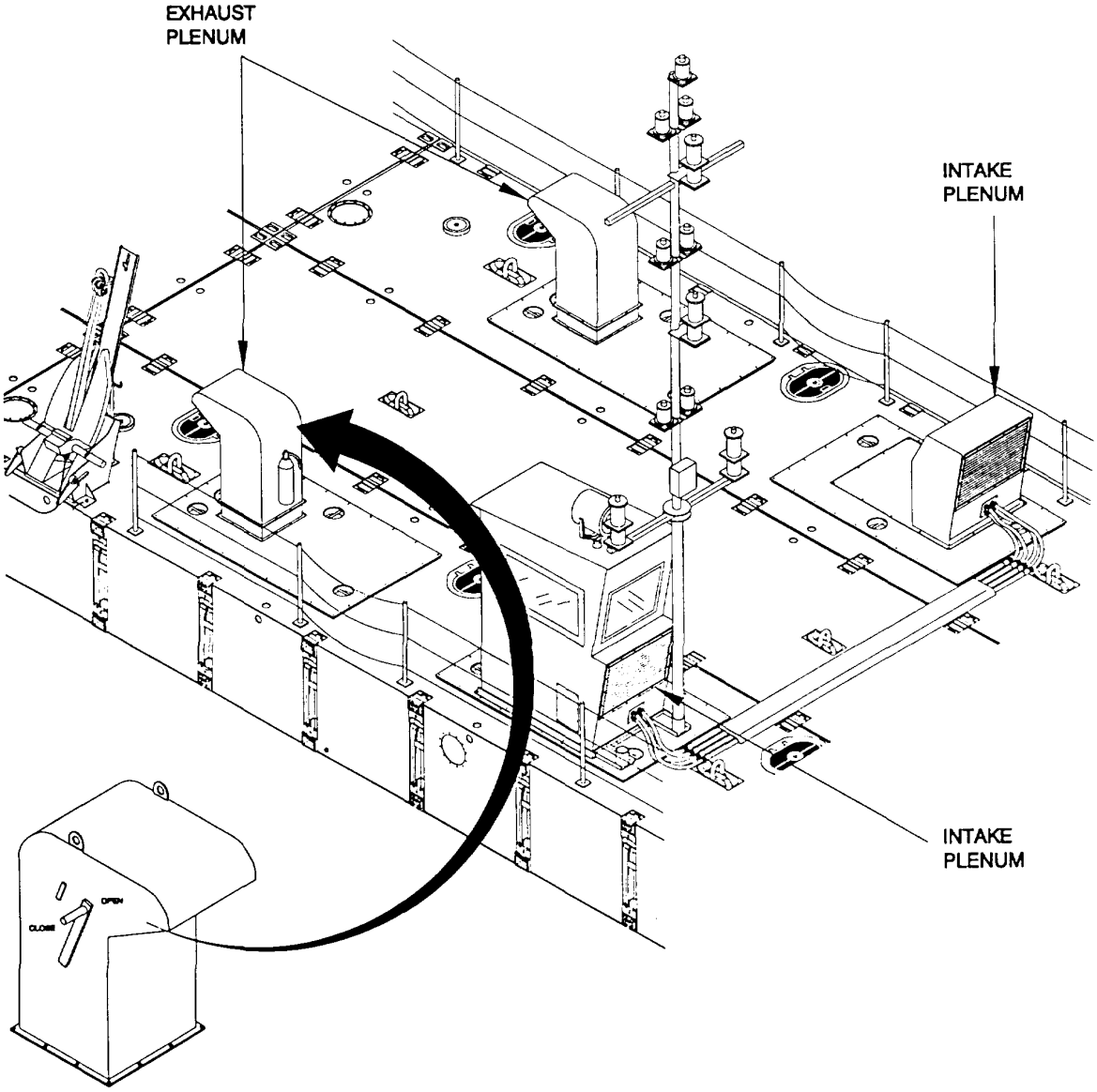

Table 2-20. Operator/Crew Preventive Maintenance Checks and Services (PMCS)

ITEM NO.	INTERVAL	LOCATION ITEM TO CHECK / SERVICE	PROCEDURE	NOT FULLY MISSION CAPABLE IF:
2	Before During	Propulsion Module	a. Ensure all soft patches are secured for sea operation, including exhaust port patches (opposite exhaust port flapper valves).	
	Before During After		b. Inspect lazaret, machinery, and fuel compartments for indications of water, oil, or fuel leaks. Access via personnel hatches.	

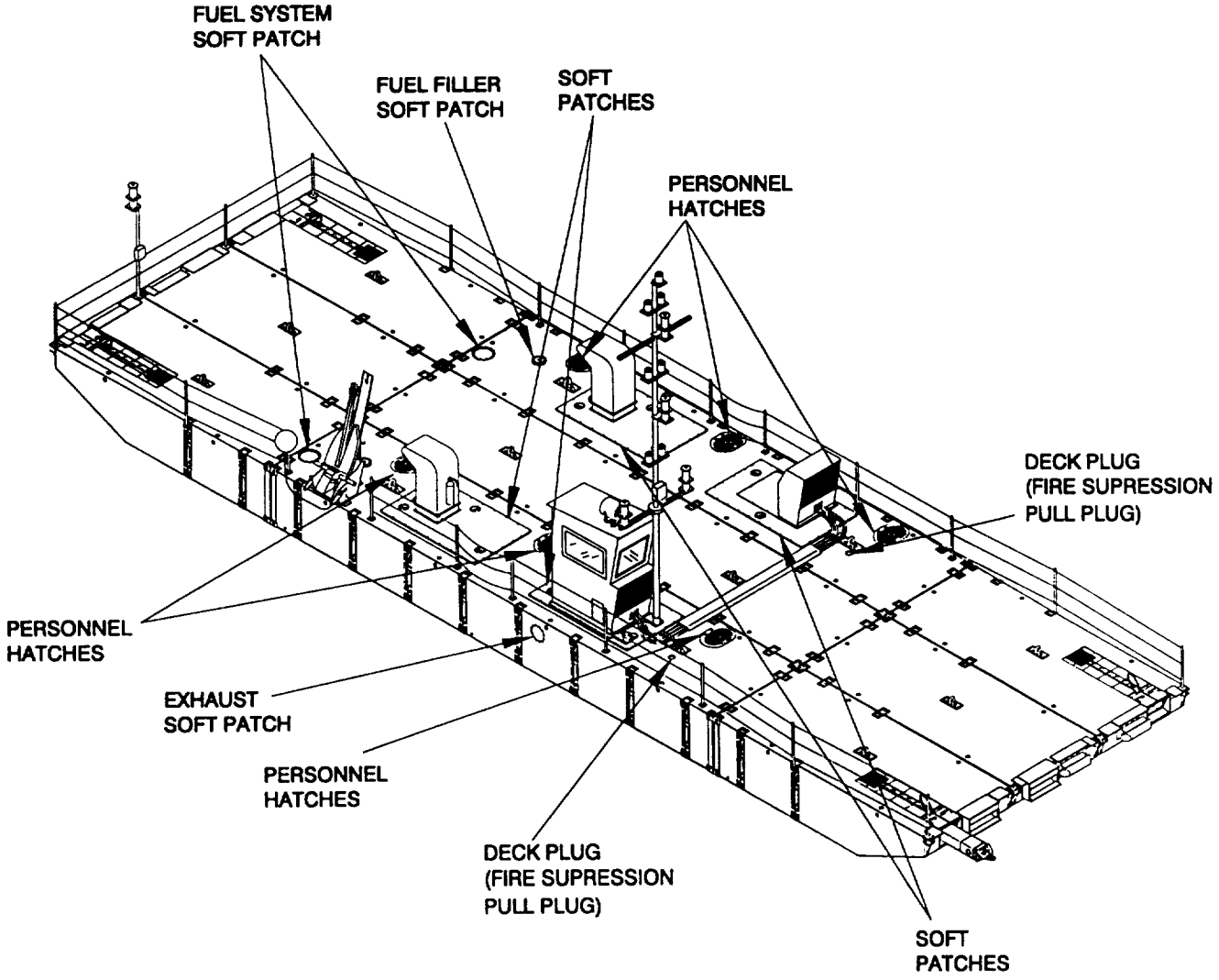

Table 2-20. Operator/Crew Preventive Maintenance Checks and Services (PMCS)

ITEM NO.	INTERVAL	LOCATION ITEM TO CHECK / SERVICE	PROCEDURE	NOT FULLY MISSION CAPABLE IF:
3	Before	Railing Assembly	a. Inspect railing posts for broken welds, missing or broken bolts and broken connectors. Repair and/or replace as necessary. This must be done before the mission can proceed b. Inspect all cable connector posts on railings for proper installation (locked or pinned) to the deck openings c. Check all cables and connection points for worn or frayed areas. Replace affected parts if necessary d. Check that all cable assemblies are tight. Tighten using the turnbuckles provided.	a. Railing posts exhibit broken welds, missing or broken bolts or broken connectors. b. Cable connector posts on railings are not properly locked or pinned to deck openings. c. Cables and Connection points are worn or frayed. d. Cable assembly turnbuckles are missing or unusable.

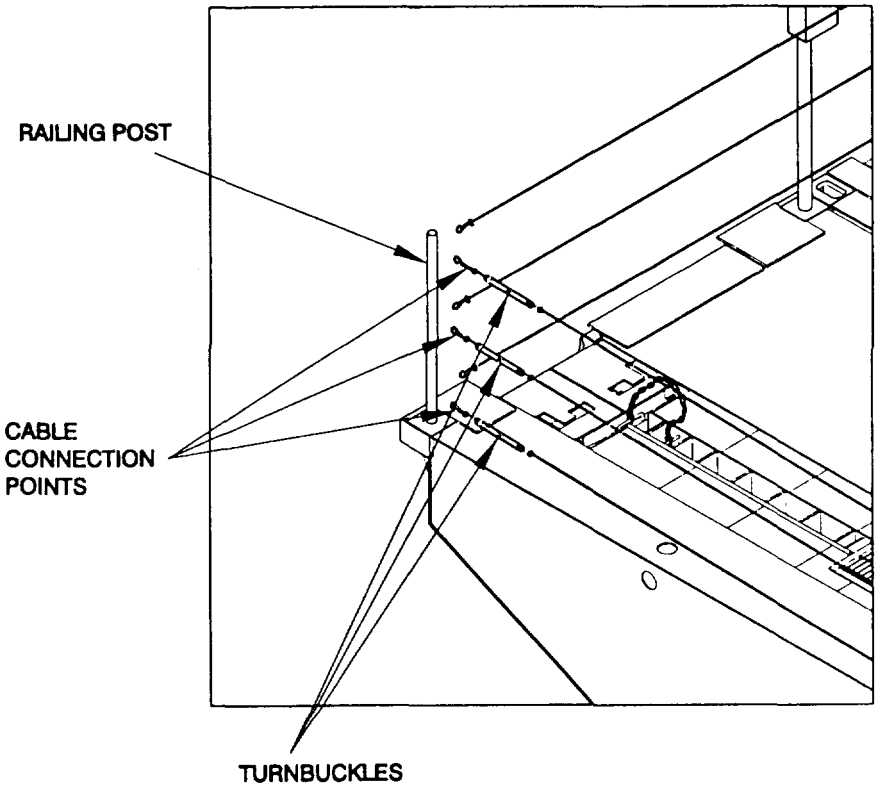

Table 2-20. Operator/Crew Preventive Maintenance Checks and Services (PMCS)

ITEM NO.	INTERVAL	LOCATION ITEM TO CHECK / SERVICE	PROCEDURE	NOT FULLY MISSION CAPABLE IF:
4	Before	Deck Fittings	Inspect D-rings and cleats for corrosion, breakage, or missing parts.	Twisted, broken or cracked.
5	Before After	Rhino Horn	Inspect for damage or cracks, missing parts, corrosion, or broken welds.	
6	Before After	Lift Shackles	Remove water from lift shackles.	Structural damage to lift shackle.

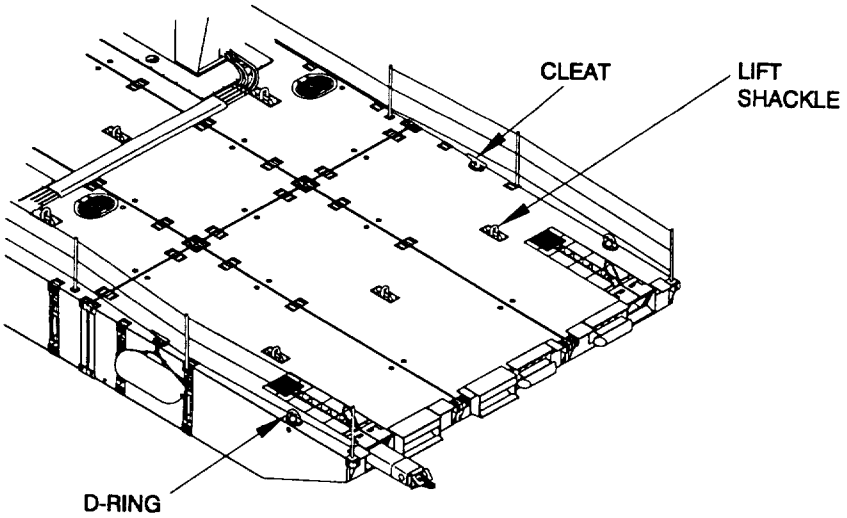

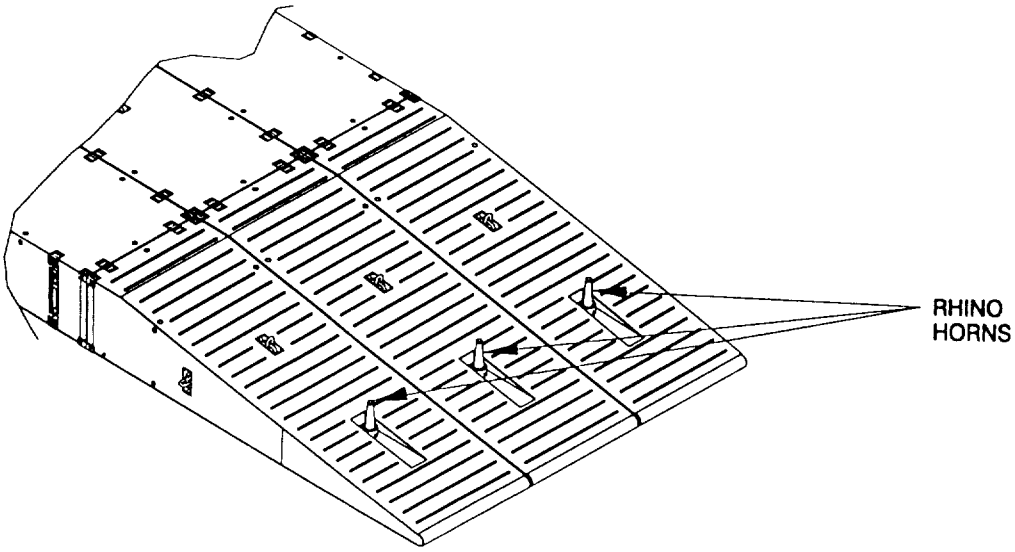

Table 2-20. Operator/Crew Preventive Maintenance Checks and Services (PMCS)

ITEM NO.	INTERVAL	LOCATION ITEM TO CHECK / SERVICE	PROCEDURE	NOT FULLY MISSION CAPABLE IF:
7	Before After	Fenders	Inspect fenders and wire rope assemblies for damage or wear.	

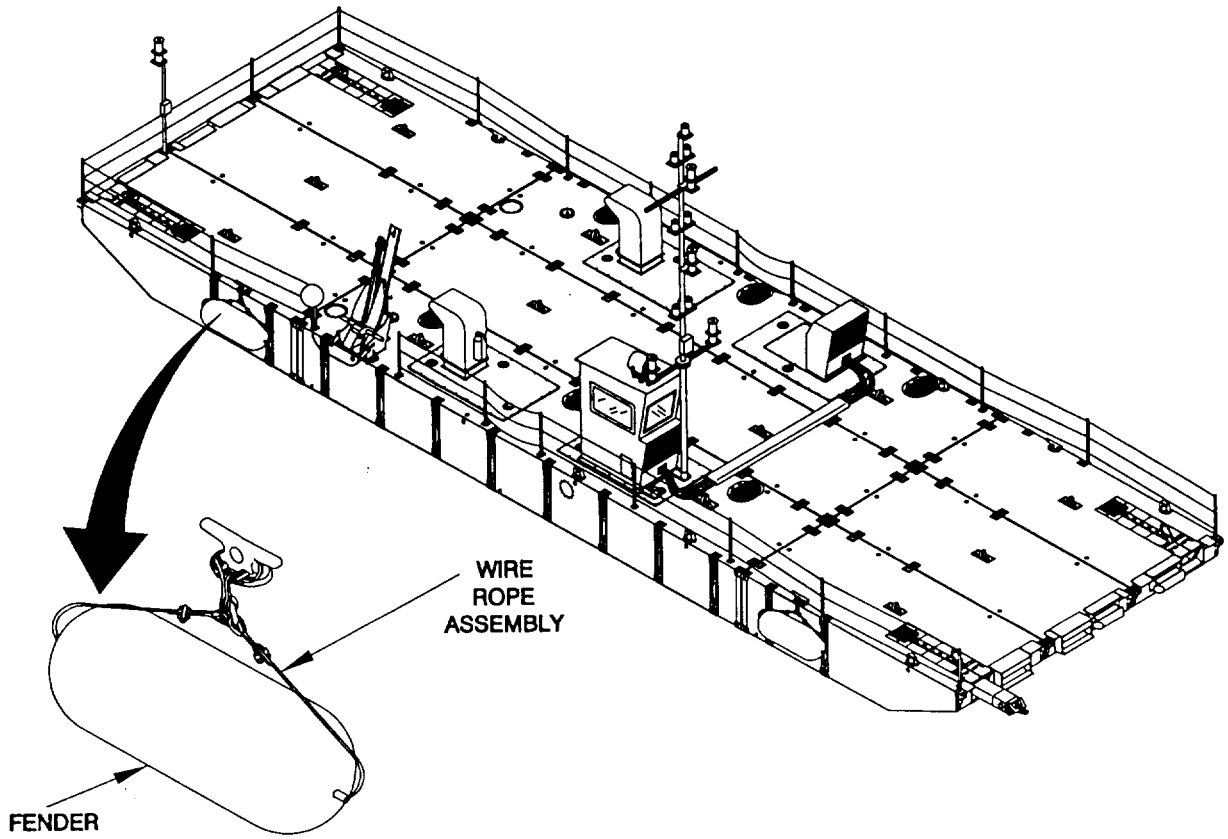

Table 2-20. Operator/Crew Preventive Maintenance Checks and Services (PMCS)

ITEM NO.	INTERVAL	LOCATION ITEM TO CHECK / SERVICE	PROCEDURE	NOT FULLY MISSION CAPABLE IF:
8	Before	Anchorboard Assembly	Inspect for wear, broken welds, corrosion, warpage.	

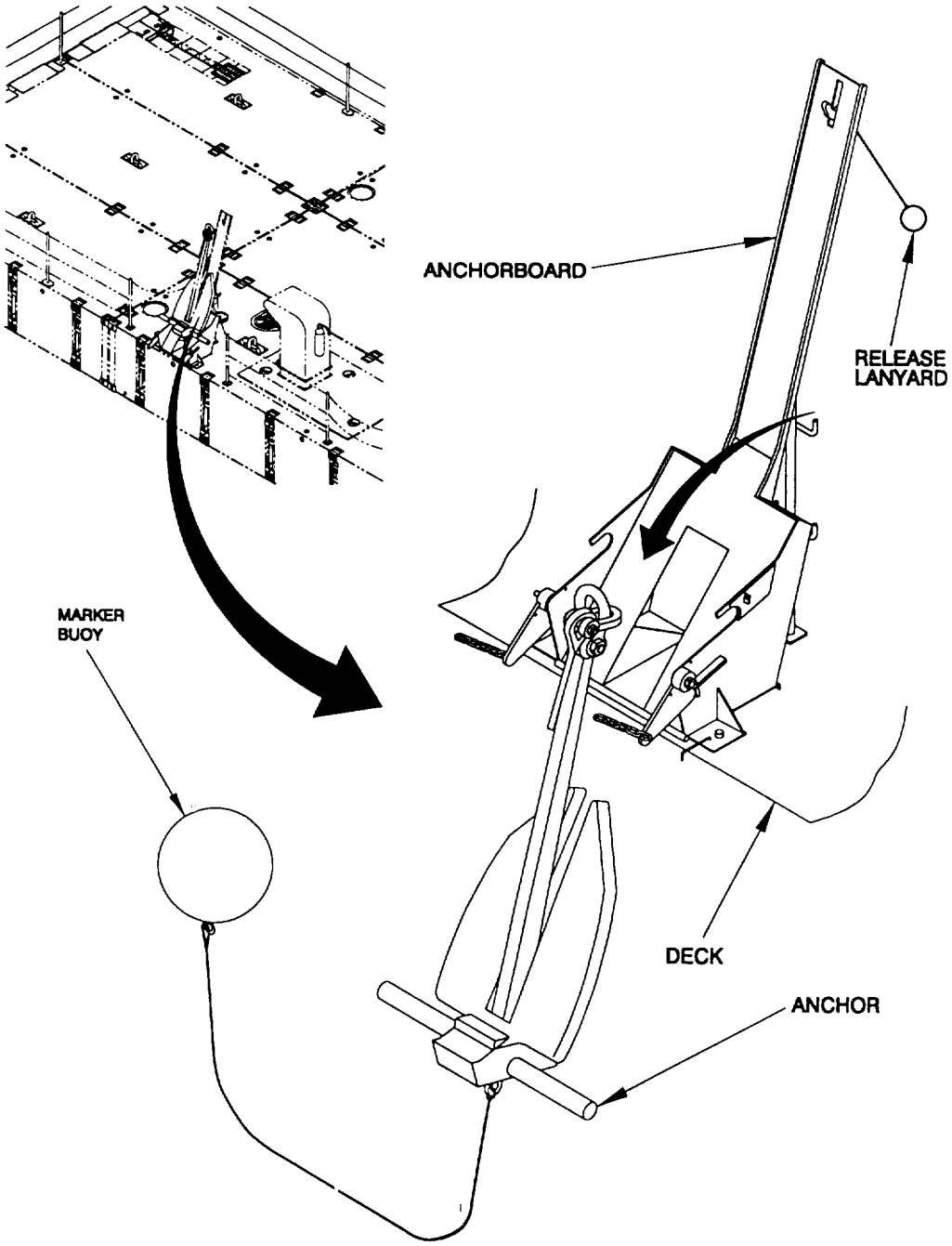

Table 2-20. Operator/Crew Preventive Maintenance Checks and Services (PMCS).

ITEM NO.	INTERVAL	LOCATION ITEM TO CHECK / SERVICE	PROCEDURE	NOT FULLY MISSION CAPABLE IF:
9	Before	Exhaust Flapper Valves	Open exhaust flapper valves, on port or starboard sides, whichever is in use.	

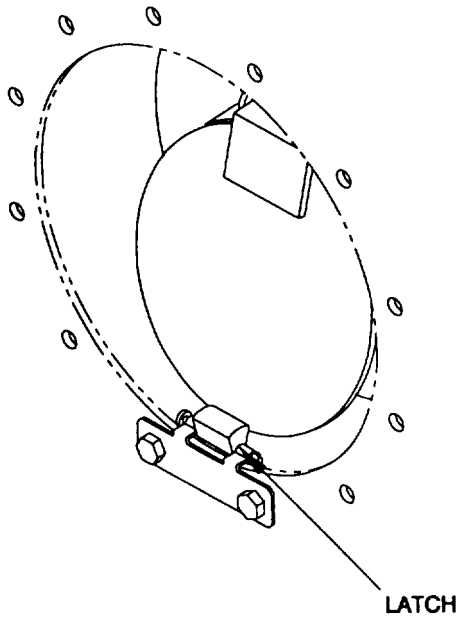

Table 2-20. Operator/Crew Preventive Maintenance Checks and Services (PMCS).

ITEM NO.	INTERVAL	LOCATION ITEM TO CHECK / SERVICE	PROCEDURE	NOT FULLY MISSION CAPABLE IF:
10	Before	Propulsion Module Circuit Breaker Panel	**WARNING** **Switch ENGINE circuit breaker OFF and ventilate machinery compartment before resuming below deck PMCS.** Switch ENGINE circuit breaker OFF. Switch MAIN circuit breaker ON. Ensure all remaining circuit breakers are in ON (up) position. Exit machinery compartment. Leave hatch open.	

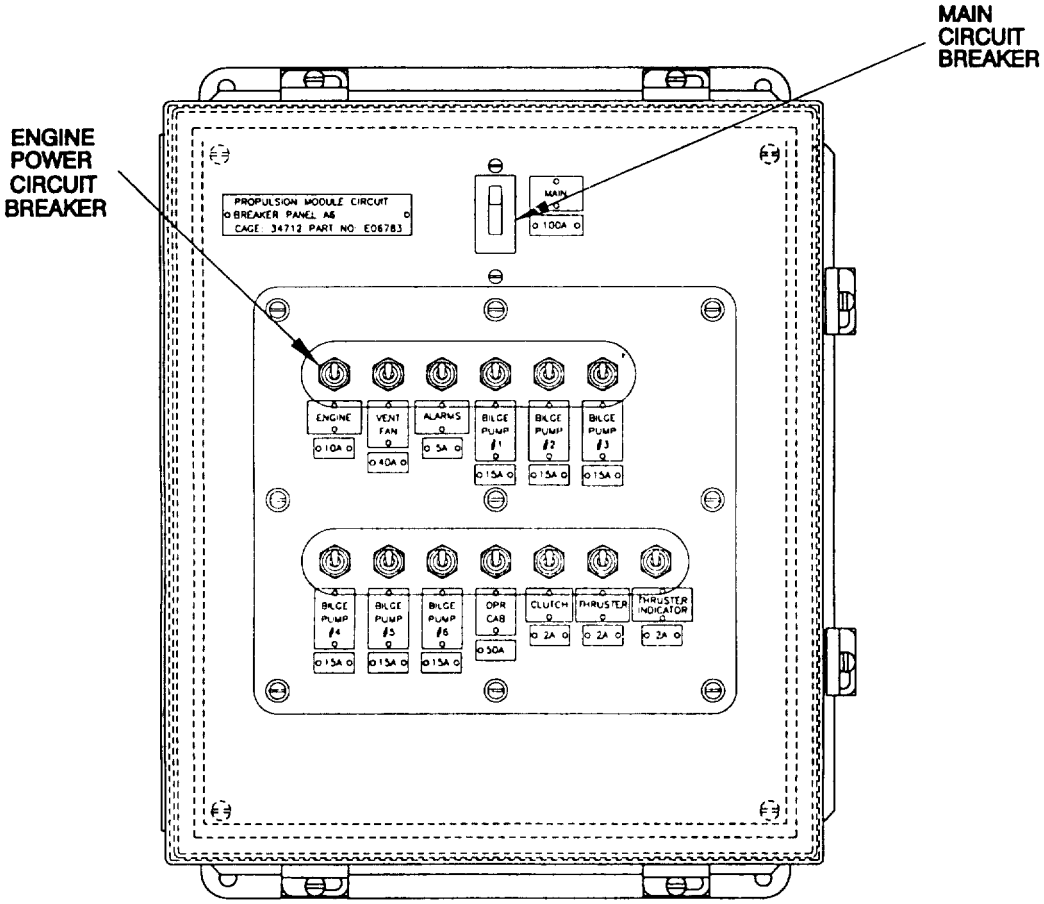

Table 2-20. Operator/Crew Preventive Maintenance Checks and Services (PMCS).

ITEM NO.	INTERVAL	LOCATION ITEM TO CHECK / SERVICE	PROCEDURE	NOT FULLY MISSION CAPABLE IF:
11	Before	Cab Circuit Breaker Panel	Switch all circuit breakers to the ON (Up) position.	

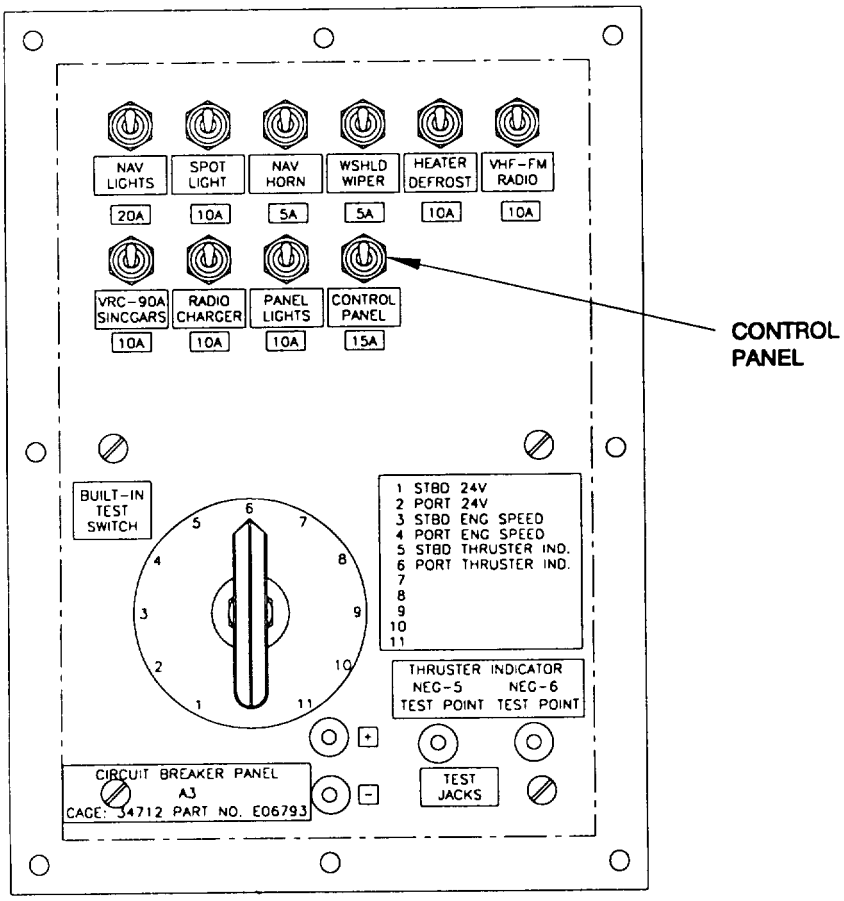

Table 2-20. Operator/Crew Preventive Maintenance Checks and Services (PMCS).

ITEM NO.	INTERVAL	LOCATION ITEM TO CHECK / SERVICE	PROCEDURE	NOT FULLY MISSION CAPABLE IF:
12	Before	Lower Control Panel (Cab)	a. Switch VENT FANS toggle switches PORT and STBD to ON position. GREEN indicator lights come ON. b. Verify that vent fans are working. c. Run the vent fans for at least 5 minutes to clear the air below deck before proceeding with, below deck, PMCS startup tasks.	

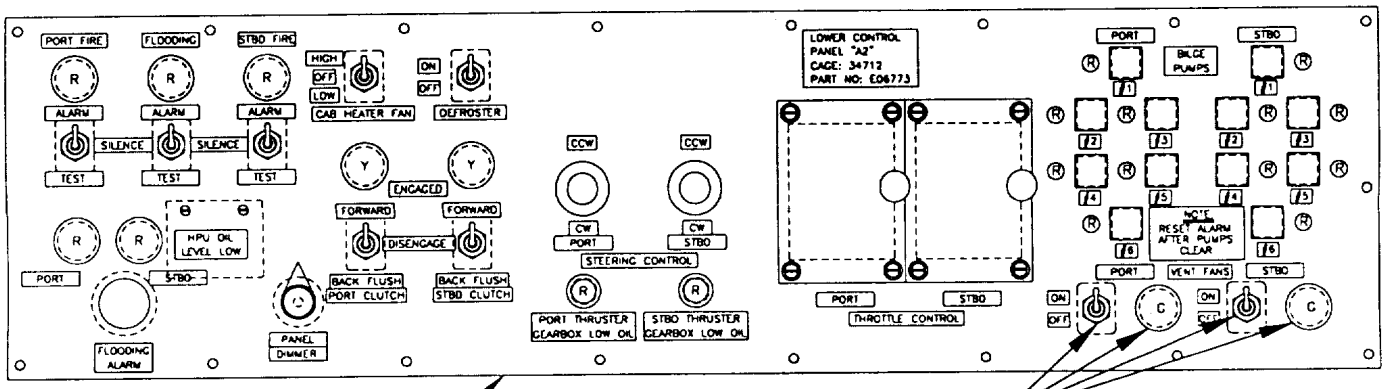

Table 2-20. Operator/Crew Preventive Maintenance Checks and Services (PMCS).

ITEM NO.	INTERVAL	LOCATION ITEM TO CHECK / SERVICE	PROCEDURE	NOT FULLY MISSION CAPABLE IF:
13	Before	Ventilation Fan	When VENT FAN toggle switch is ON, verify that fans are working. Run the ventilation system for at least 5 minutes to clear the air below deck before going below deck to continue the preoperational startup tasks.	

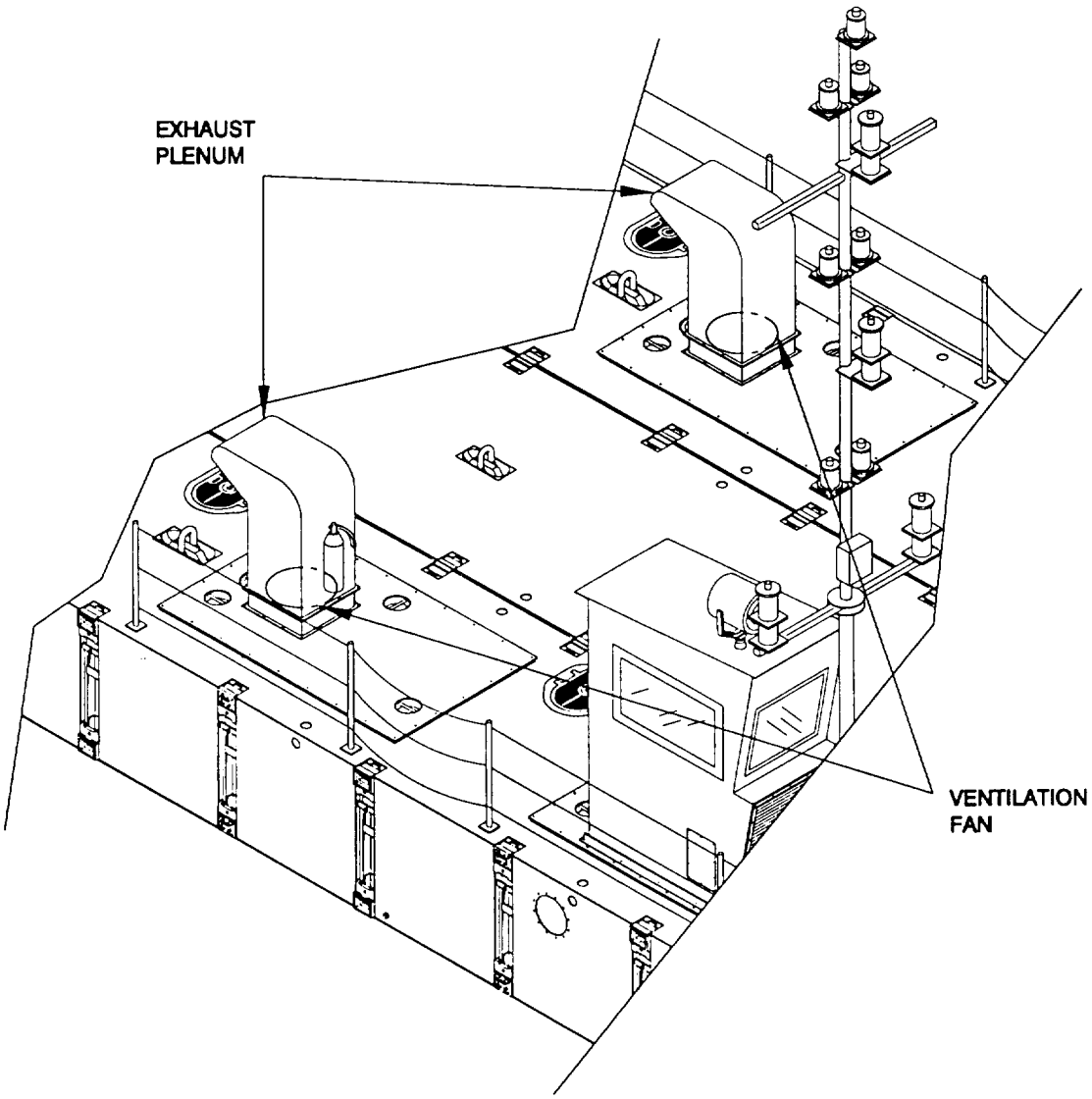

Table 2-20. Operator/Crew Preventive Maintenance Checks and Services (PMCS).

ITEM NO.	INTERVAL	LOCATION ITEM TO CHECK / SERVICE	PROCEDURE	NOT FULLY MISSION CAPABLE IF:
14	Before After	Bilge Pump System Compartment)	a. Inspect compartment for evidence of leaks of water, oil, and/or fuel. If (Machinerynoted, determine the cause and repair before further operation. If only water is present, activate bilge pump(s), as indicated by the RED FLOOD location light(s) on the operator's control console in the operator's cab, by pushing adjacent bilge pump pushbuttons. Once water is removed, the bilge pump(s) will automatically stop.	Evidence of Class III leakage of water, oil, and/or fuel.
	Before	Bilge Pump Control Panel Assembly (Below Deck)	b. Test pumps by momentarily holding toggle switch(es) in TEST position and listening for pump operation. Switches will spring-return to the REMOTE position.	

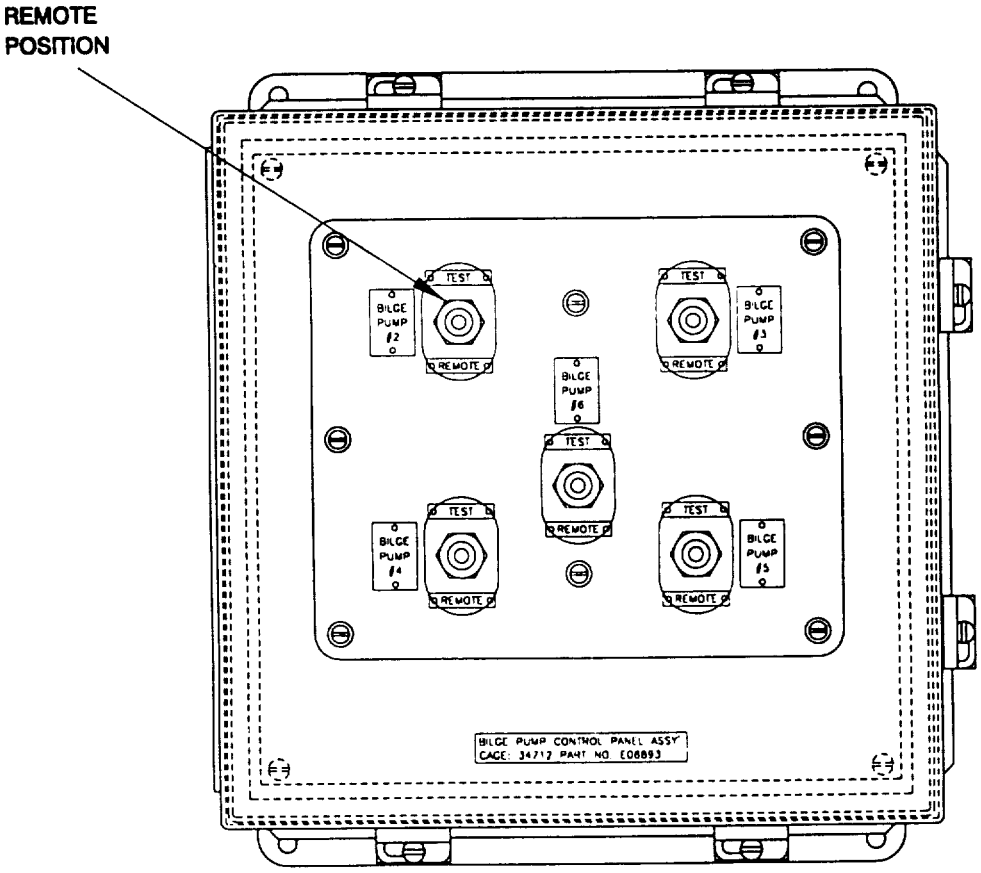

Table 2-20. Operator/Crew Preventive Maintenance Checks and Services (PMCS).

ITEM NO.	INTERVAL	LOCATION ITEM TO CHECK / SERVICE	PROCEDURE	NOT FULLY MISSION CAPABLE IF:
15	Before After	Electrical Junction and Terminal Boxes	a. Inspect electrical wiring to see that it is securely connected, clean, and undamaged.	Electrical wiring, fuse terminal blocks and connections are not secured, dirty, or damaged.
			b. Check all accessible fuse terminal blocks and connections to see that they are securely connected and supported, that insulation is not cracked or chafed, and that conduit and shielding are secure and in good condition.	Insulation is found to be cracked, chafed or missing.

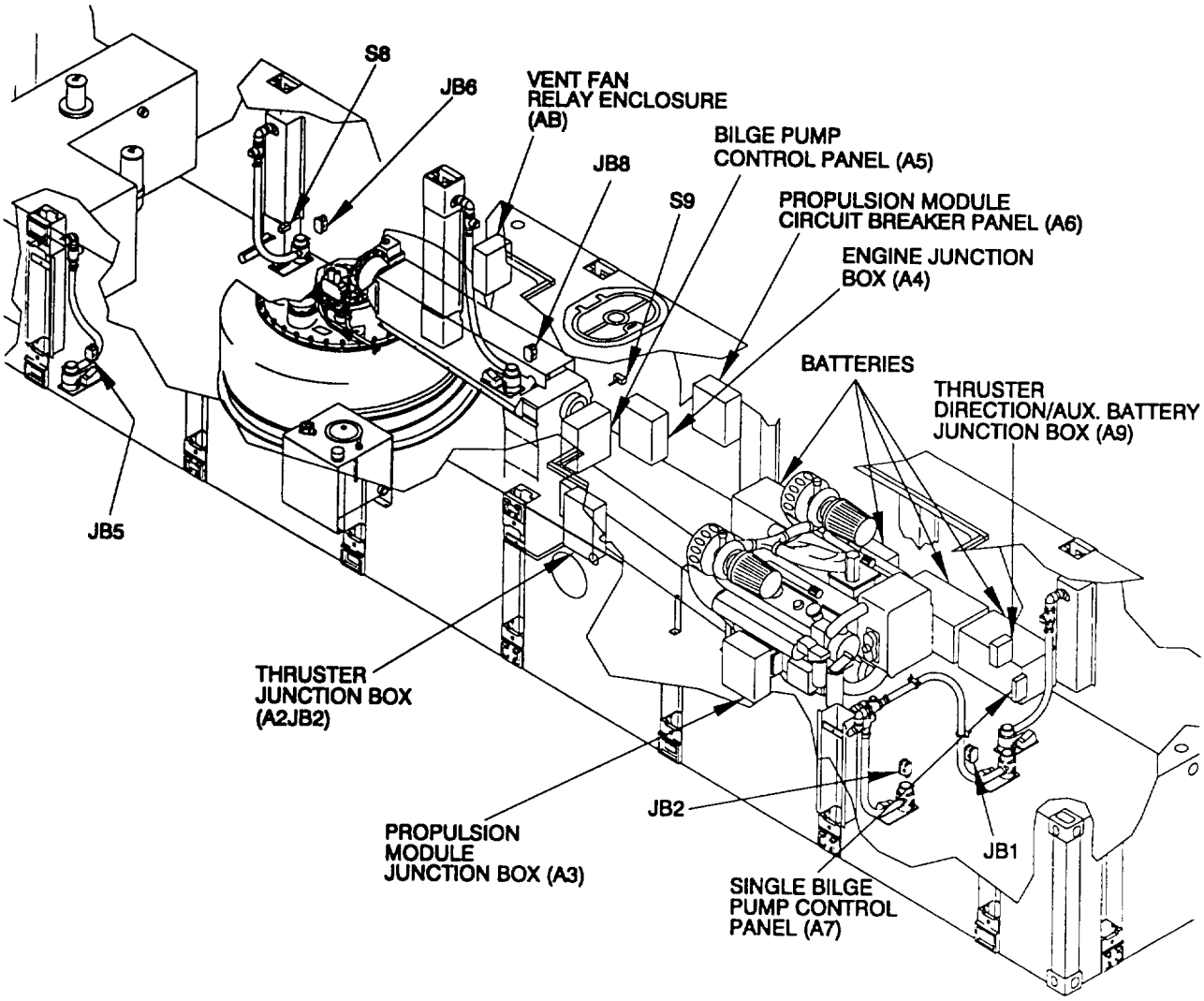

Table 2-20. Operator/Crew Preventive Maintenance Checks and Services (PMCS).

ITEM NO.	INTERVAL	LOCATION ITEM TO CHECK / SERVICE	PROCEDURE	NOT FULLY MISSION CAPABLE IF:
16	Before	Raw Water Cooling System	a. Open sea chest butterfly valves, both port and starboard.	
	Before		b. Check the raw water system for leaks. Repair and/or replace parts as required to stop any leakage. This must be done before the mission can proceed.	Leakage cannot be located or repaired .
	Before		c. Verify that the duplex strainer valve handle is in the extreme left of right position (allowing water to flow though only one of the two strainer baskets).	
	Before		d. Verify the exhaust discharge raw water valve lever is in the OPEN position.	
	Before		e. Verify the transfer case oil cooler raw water valve lever is in the OPEN position.	
	Before After		f. Inspect the cooling system for leaks or excessive puddling around its base. If found, determine the cause of the leaks or puddling. Repair and/or replace parts as required to eliminate the leaks.	
	Before		g. In freezing weather (below 32°F.): Close all petcocks in the raw water system. Prime the raw water pump. Inspect for leaks after startup of engine.	

Table 2-20. Operator/Crew Preventive Maintenance Checks and Services (PMCS).

ITEM NO.	INTERVAL	LOCATION ITEM TO CHECK / SERVICE	PROCEDURE	NOT FULLY MISSION CAPABLE IF:
16 Con't	During	Raw Water Cooling System	h. Observe raw water flow from exhaust pipe on outboard section of propulsion module, both port and starboard. If little or no water exists at the exhaust pipe, shut down the engine (push engine STOP push button on Middle Control Panel) and check the duplex strainers for clogging.	
	After		l. Close the sea chest butterfly valves, both port and starboard.	Leakage cannot be located or repaired.
	After		j. Freezing Weather (below 32°F) only: Drain all raw water from the raw water cooling system as follows: Open all raw water system petcock drains to drain the system. Leave petcocks open until the next startup. Drain the transfer case oil cooler by disconnecting the raw water outlet hose at the lowest point. Reconnect hose when system has drained. Drain the raw water pump as follows: Loosen the six capscrews from the cover. Tap the cover to break the seal. Drain any water. Replace the cover and capscrews. Tighten the capscrews to secure the seal. Drain the muffler by removing drain plugs . Reinstall plugs when muffler has drained. Drain the duplex strainer by removing the drain plugs at the bottom of each basket housing. Replace plugs when the strainer has drained. In the event of freeze up or other damage, repair and/or replace parts as necessary.	

Table 2-20. Operator/Crew Preventive Maintenance Checks and Services (PMCS).

ITEM NO.	INTERVAL	LOCATION ITEM TO CHECK / SERVICE	PROCEDURE	NOT FULLY MISSION CAPABLE IF:
16 Con't				

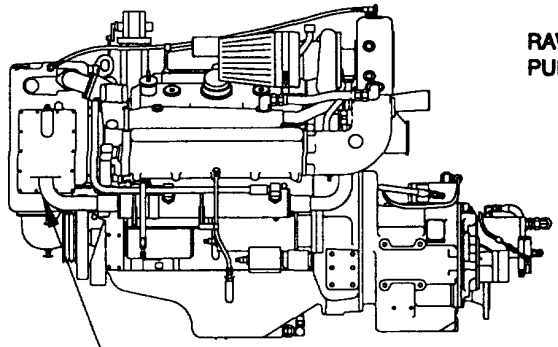

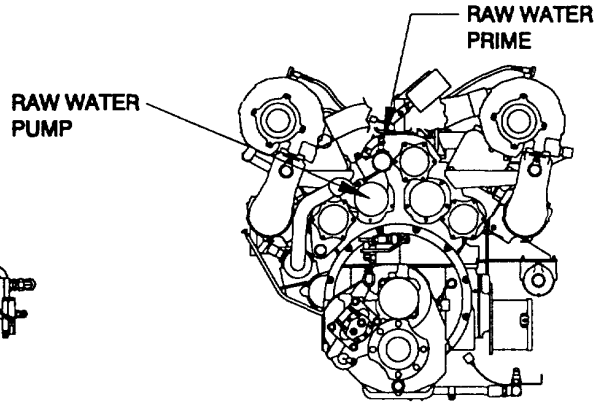

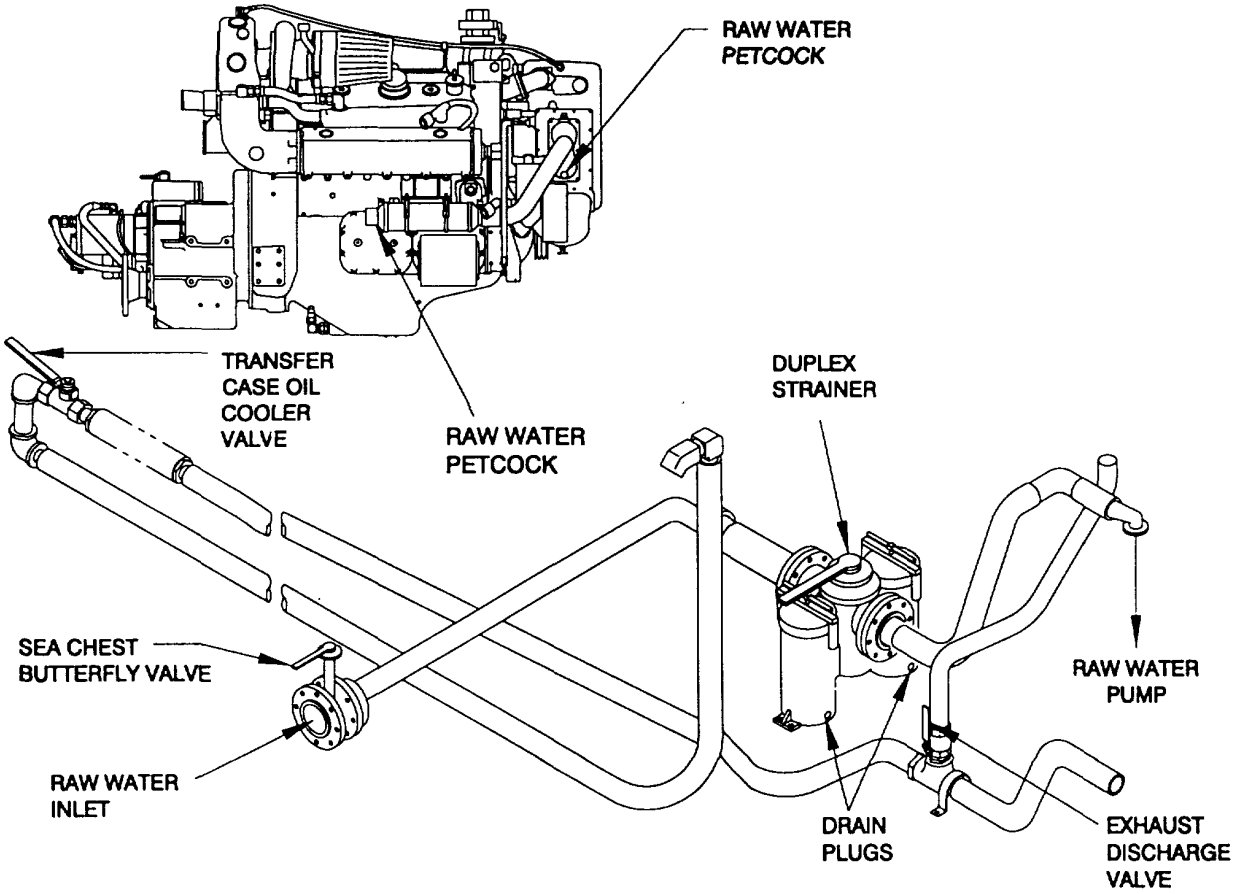

Table 2-20. Operator/Crew Preventive Maintenance Checks and Services (PMCS).

ITEM NO.	INTERVAL	LOCATION ITEM TO CHECK / SERVICE	PROCEDURE	NOT FULLY MISSION CAPABLE IF:
17	Before After	Bilge Pumps	Check all bilge pumps and float switches for condition and proper operation. Look for evidence of water leaks, loose pump connections and/or damage.	

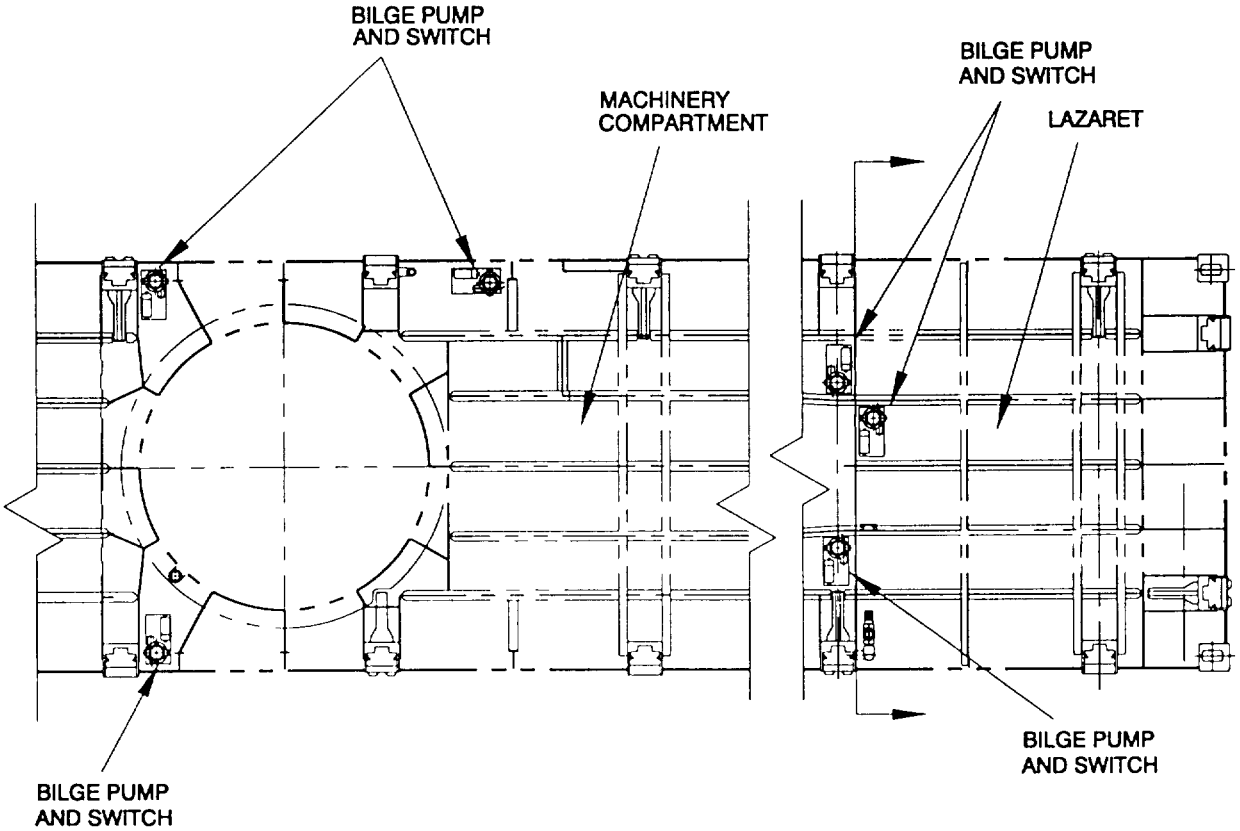

Table 2-20. Operator/Crew Preventive Maintenance Checks and Services (PMCS).

ITEM NO.	INTERVAL	LOCATION ITEM TO CHECK / SERVICE	PROCEDURE	NOT FULLY MISSION CAPABLE IF:
17 Con't				

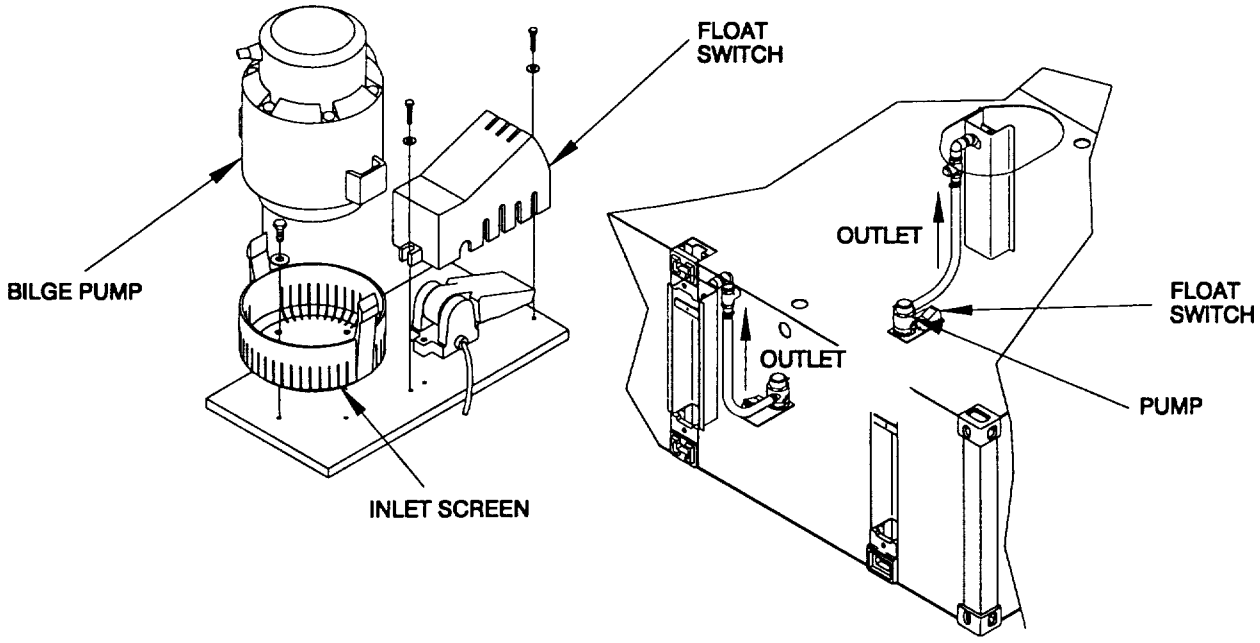

Table 2-20. Operator/Crew Preventive Maintenance Checks and Services (PMCS)

ITEM NO.	INTERVAL	LOCATION ITEM TO CHECK / SERVICE	PROCEDURE	NOT FULLY MISSION CAPABLE IF:
18	Before	Diesel Engine	a. Check the engine oil level. Verify that it registers FULL on the dipstick. Engine must be cool when reading level. If hot, allow to cool for 20 minutes. DO NOT OVERFILL.	
	Before After		b. Make a visual inspection for oil leaks around the filters and the external oil lines. The cause must be determined and parts repaired or replaced as required.	
	Before After		c. Visually inspect the oil. If metal particles are found in it, the oil must be completely changed. Record current engine hour reading and compare with oil change repair records.	

Table 2-20. Operator/Crew Preventive Maintenance Checks and Services (PMCS)

ITEM NO.	INTERVAL	LOCATION ITEM TO CHECK / SERVICE	PROCEDURE	NOT FULLY MISSION CAPABLE IF:
18 Con't				

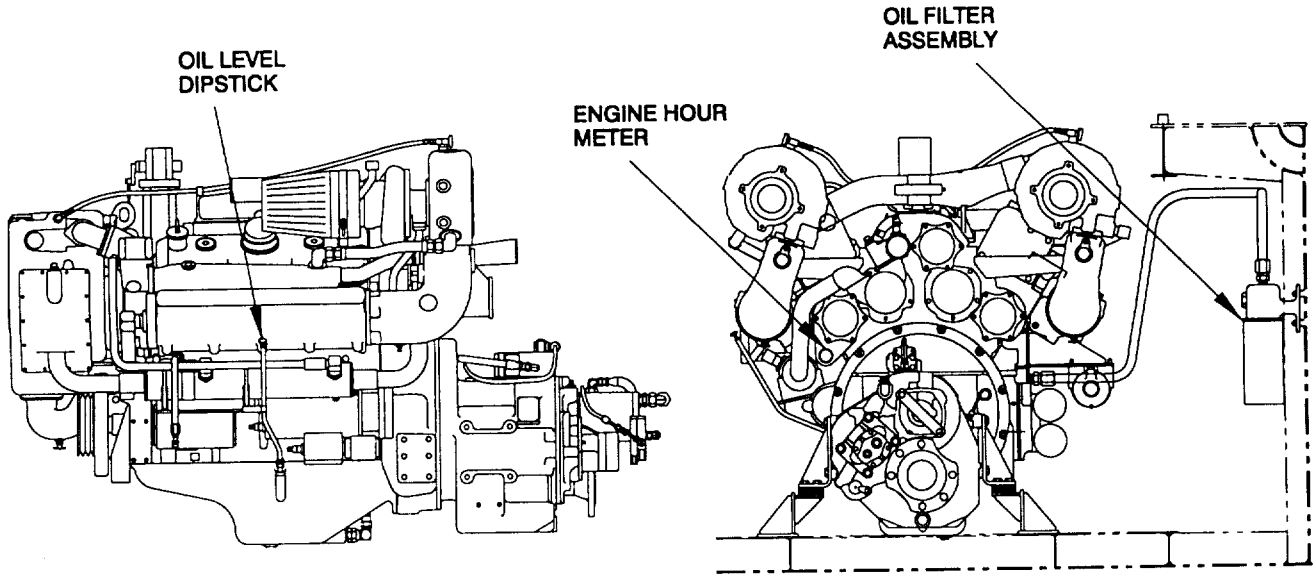

Table 2-20. Operator/Crew Preventive Maintenance Checks and Services (PMCS)

ITEM NO.	INTERVAL	LOCATION ITEM TO CHECK / SERVICE	PROCEDURE	NOT FULLY MISSION CAPABLE IF:
19	Before	Alternator (Diesel Engine)	Check for split, dry-rotted or glazed alternator drive belts. If noted, replace the belt. Check belt tension. To check for proper tension with the ENGINE OFF, use a 15/16" socket on the hex of the alternator pulley and try to turn it (clockwise) If the pulley turns the belt can slip. If belt is loose, perform proper adjustments.	Belts are split or glazed. Belts are loose.

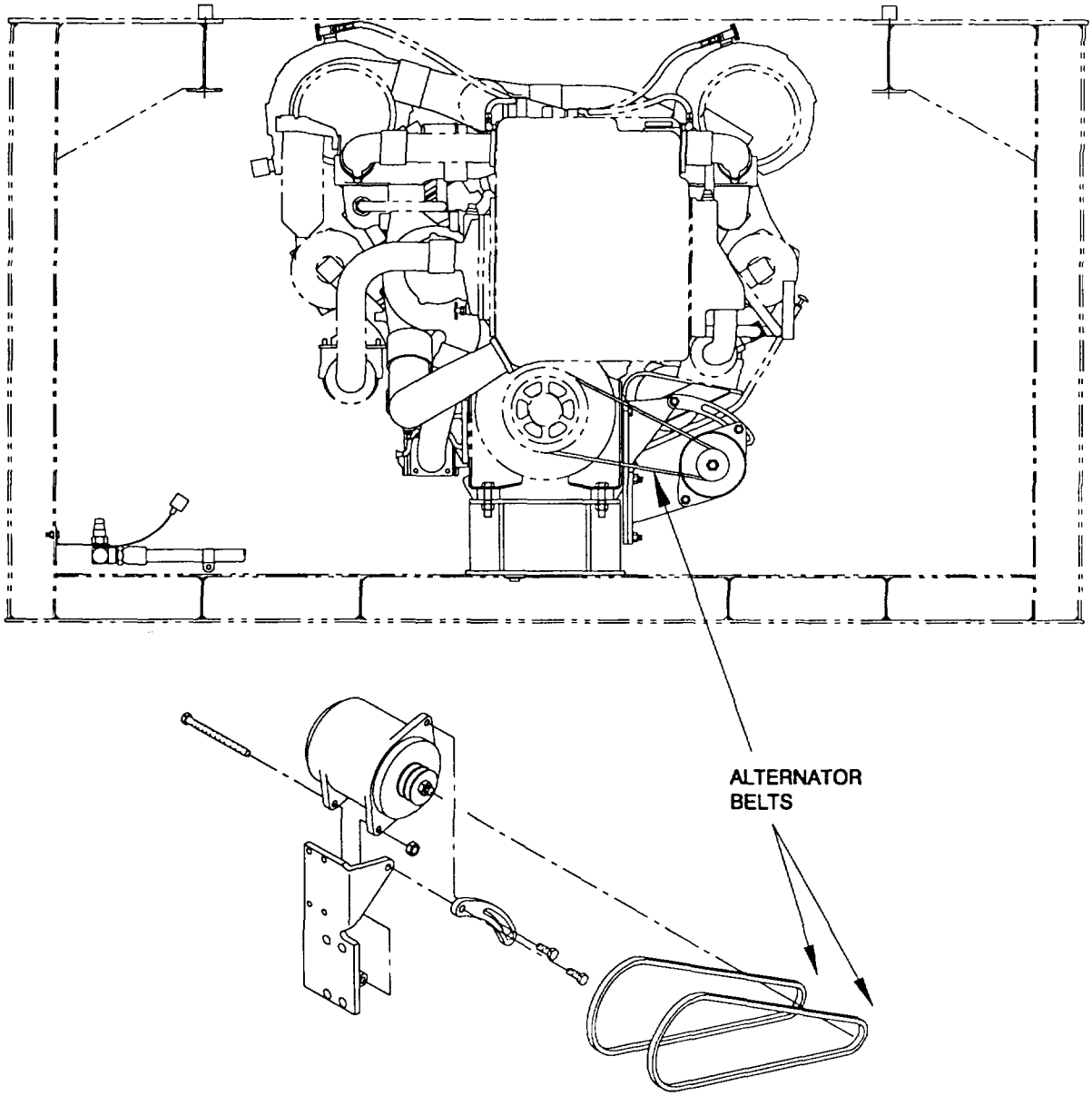

Table 2-20. Operator/Crew Preventive Maintenance Checks and Services (PMCS)

ITEM NO.	INTERVAL	LOCATION ITEM TO CHECK / SERVICE	PROCEDURE	NOT FULLY MISSION CAPABLE IF:
20	Before	Diesel Engine	**WARNING** **Do not remove the pressure control cap from the heat exchanger or attempt to drain the coolant until the engine has cooled to less than 160° F. Once the engine has cooled, use extreme caution when removing the cap. Failure to comply may result in injury to personnel.**	
			a. Check the engine coolant level. Verify that it is within 1" from the top of the heat exchanger, both port and starboard. Add proper coolant mixture as needed. The mixture shall be 1/2 glycol-base antifreeze and 1/2 fresh (not sea) water.	Cooling level is not near the bottom level of the filler neck on the heat exchanger tank
			b. Inspect the air separators. If the air inlet restriction indicator is RED, replace or clean the filter and the vacuum limiter.	Air inlet restriction indicator is red.

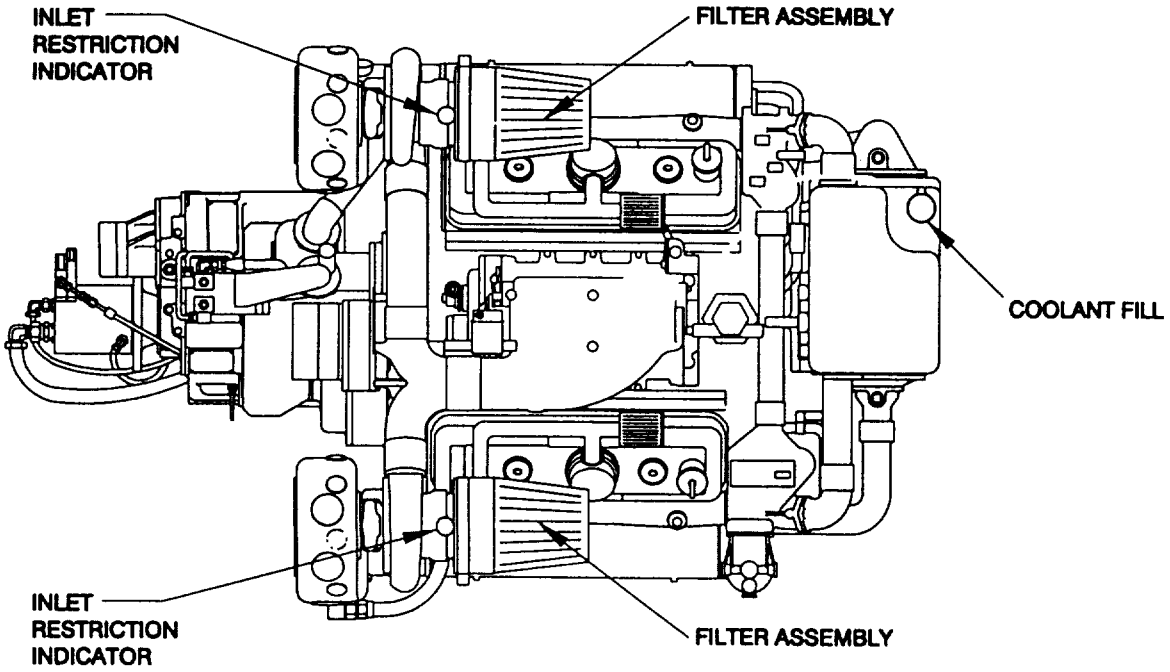

Table 2-20. Operator/Crew Preventive Maintenance Checks and Services (PMCS)

ITEM NO.	INTERVAL	LOCATION ITEM TO CHECK / SERVICE	PROCEDURE	NOT FULLY MISSION CAPABLE IF:
20 Con't	Before	Diesel Engine - Con't	c. Verify freshwater filter hand valves are open.	

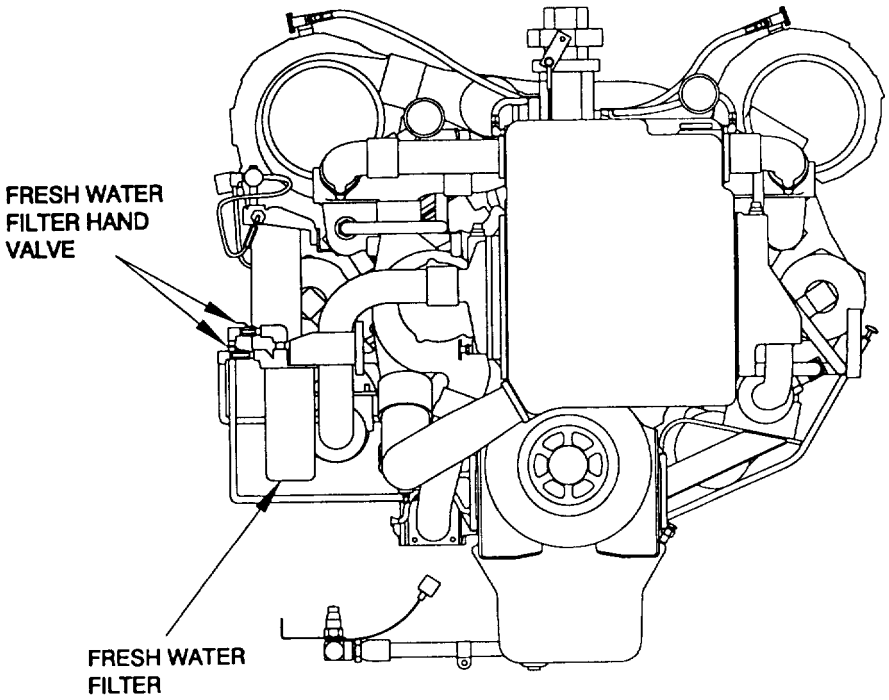

Table 2-20. Operator/Crew Preventive Maintenance Checks and Services (PMCS)

ITEM NO.	INTERVAL	LOCATION ITEM TO CHECK / SERVICE	PROCEDURE	NOT FULLY MISSION CAPABLE IF:
21	Batteries		**WARNING** **Battery acid must not come in contact with clothing, skin and eyes. Use appropriate personal protective equipment when handling.** **Keep sparks and flames away from the vicinity of the batteries to prevent explosion. Failure to comply may result in serious injury or death to personnel.** **When charging the batteries, do not reverse battery polarity. Reversing battery polarity can cause a sudden discharge of electrolyte from the battery vents and/or sudden rupture of the battery case.**	
	Before After		a. Verify battery electrolyte levels completely cover the plates, without electrolyte overflowing the battery, and that connections are clean and tight, both port and starboard. Add distilled water, if necessary.	
	Before		b. Ensure all battery cable clamps and hold downs are tight. Make sure all are secure and free of corrosion. Tighten and clean if necessary and apply light layer of grease on cable clamps.	
	Before After		c. Inspect battery system for damage. Repair and/or replace parts as necessary to ensure proper operation and prevent failures during the mission.	

Table 2-20. Operator/Crew Preventive Maintenance Checks and Services (PMCS)

ITEM NO.	INTERVAL	LOCATION ITEM TO CHECK / SERVICE	PROCEDURE	NOT FULLY MISSION CAPABLE IF:
21 Con't	Before	Batteries	d. If operating charging levels are found to be too low while starting engine, change battery immediately. Check each cell with a hydrometer to determine condition of the battery. DO NOT run battery down.	

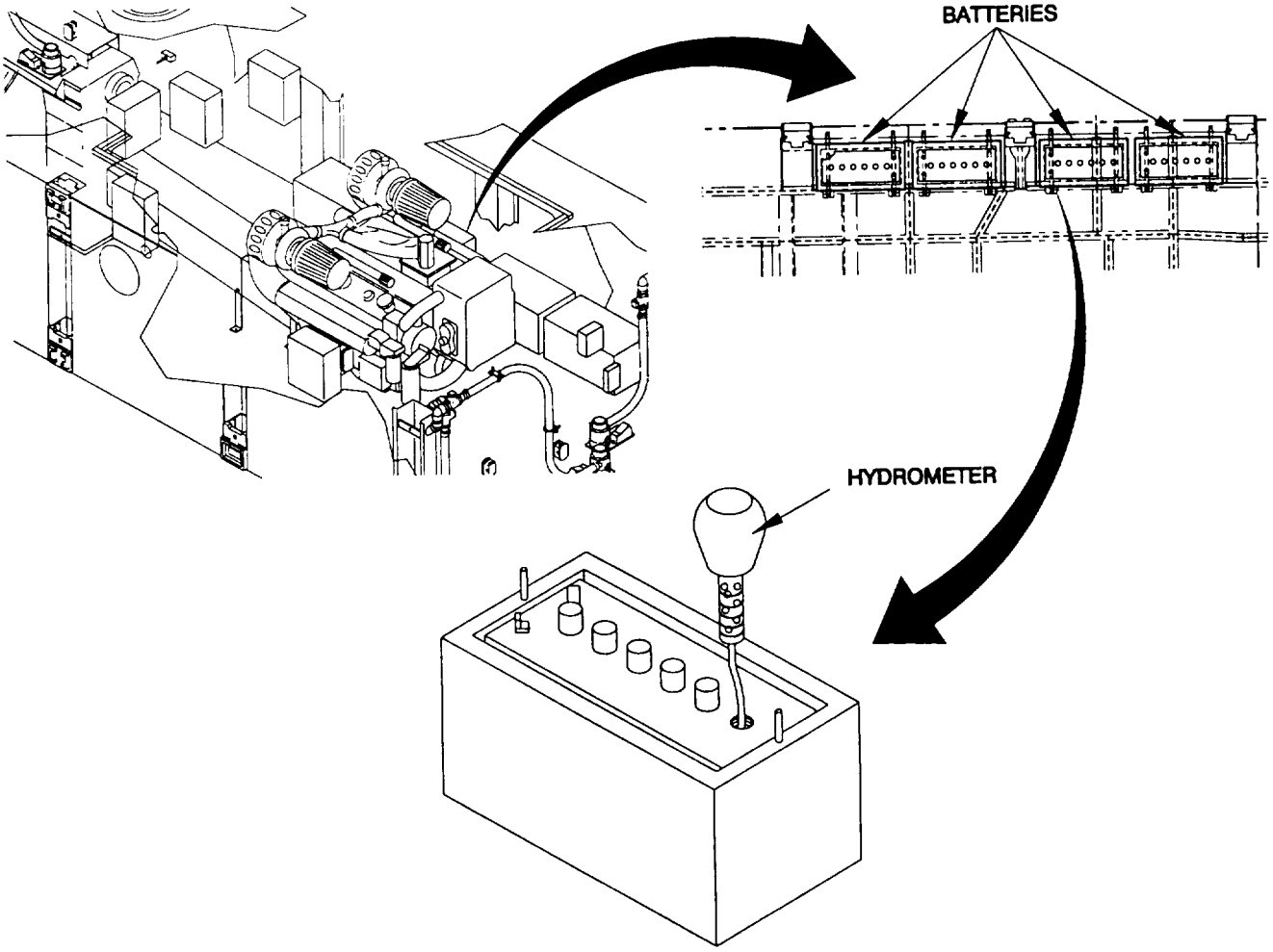

Table 2-20. Operator/Crew Preventive Maintenance Checks and Services (PMCS)

ITEM NO.	INTERVAL	LOCATION ITEM TO CHECK / SERVICE	PROCEDURE	NOT FULLY MISSION CAPABLE IF:
22		Diesel Engine	**WARNING** **Ventilate system for 5 minutes before starting engine. Failure to comply may result in serious injury to personnel.**	
	Before		a. Check the turbochargers and exhaust connections. Visually inspect the mountings, intake and exhaust ducting, and connections for leaks. In temperatures below freezing (32° F.) check freeze plugs for water leaks.	Evidence of leaks or restrictions.
	During		b. Listen for unusual noise or excessive vibration. Stop engine and determine the cause.	Excessive vibration. Stop engine and determine the cause.
	During		c. Check the oil inlet and outlet lines for leaks or restrictions to oil flow. If excessive leaks or restrictions are found, determine the cause. Repair and/or replace parts as required to eliminate the eliminate the leaks or restrictions.	If excessive leaks or restrictions are found, determine the cause. Repair and/or replace parts as required to leaks or restrictions.
	Before		d. Inspect the engine air filtering system for leaks, torn boots, and loose or damaged clamps.	

Table 2-20. Operator/Crew Preventive Maintenance Checks and Services (PMCS)

ITEM NO.	INTERVAL	LOCATION ITEM TO CHECK / SERVICE	PROCEDURE	NOT FULLY MISSION CAPABLE IF:
22 Con't				

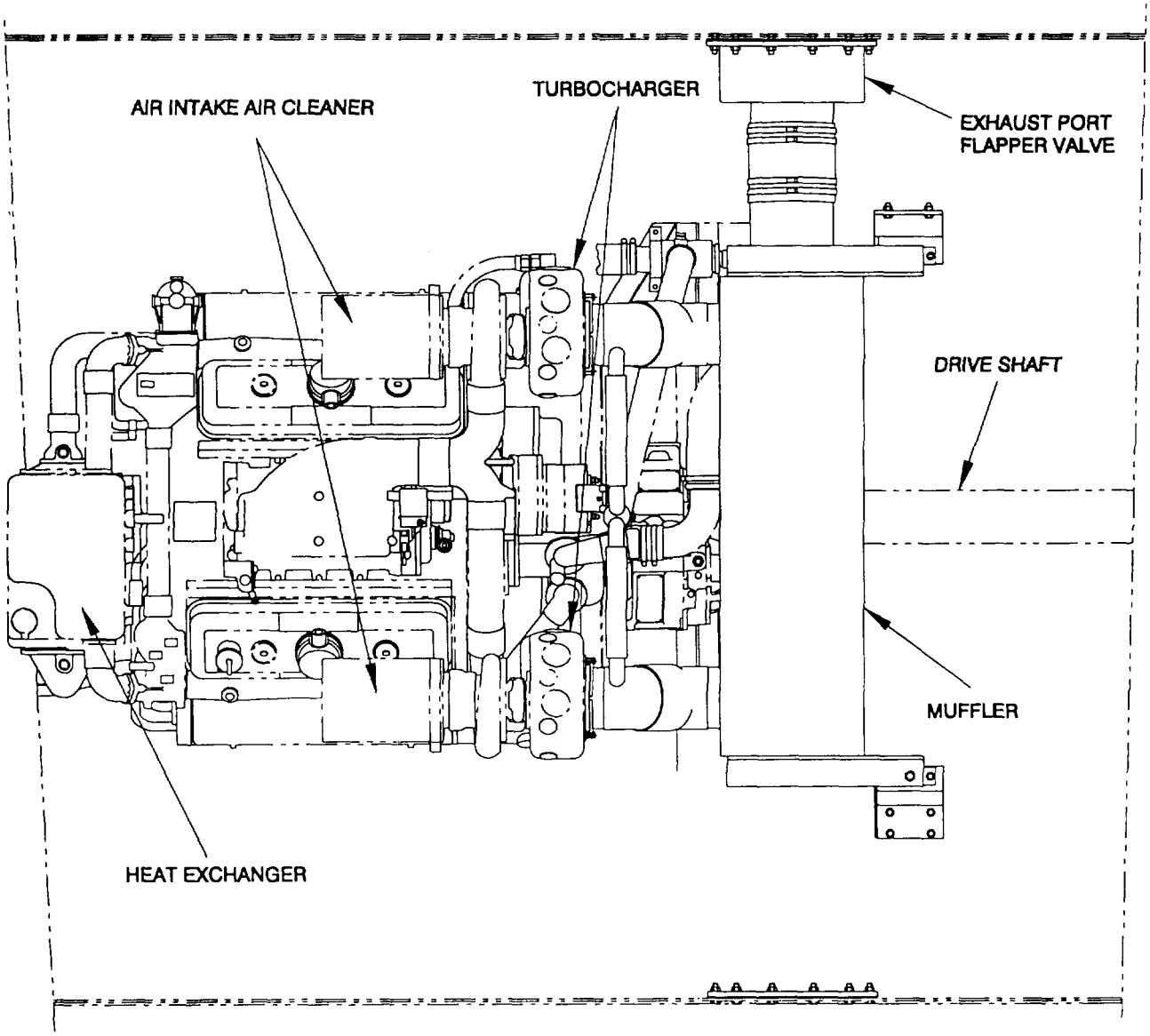

Table 2-20. Operator/Crew Preventive Maintenance Checks and Services (PMCS)

ITEM NO.	INTERVAL	LOCATION ITEM TO CHECK / SERVICE	PROCEDURE	NOT FULLY MISSION CAPABLE IF:
23	Before	Marine Gear	a. Check the oil level in the Marine Gear. Fill to "F" mark on dip stick with SAE #40 oil.	Oil level too low or wrong grade oil is used.
	Before		b. Inspect for leaks in the Marine gear, particularly near the oil seals. If any leaks are noted, determine the cause and report to the next higher level (UL) of maintenance.	If a Class III leak is found, the mission cannot proceed until fixed.
	Before		c. Read engine hours and record in logbook.	
	During		d. Run the engine at 790 - 800 RPM without load for approximately 5 minutes while monitoring all gauges.	
	During		e. Listen to engine for any unusual or peculiar noises. If any are noted, immediately shut down engine using engine STOP pushbutton(s) on Middle Control Panel.	
	After		f. Idle engine (790-800 rpm) for a minimum of 5 minutes to ensure gradual cool down.	

Table 2-20. Operator/Crew Preventive Maintenance Checks and Services (PMCS)

ITEM NO.	INTERVAL	LOCATION ITEM TO CHECK / SERVICE	PROCEDURE	NOT FULLY MISSION CAPABLE IF:
23 Cont.				

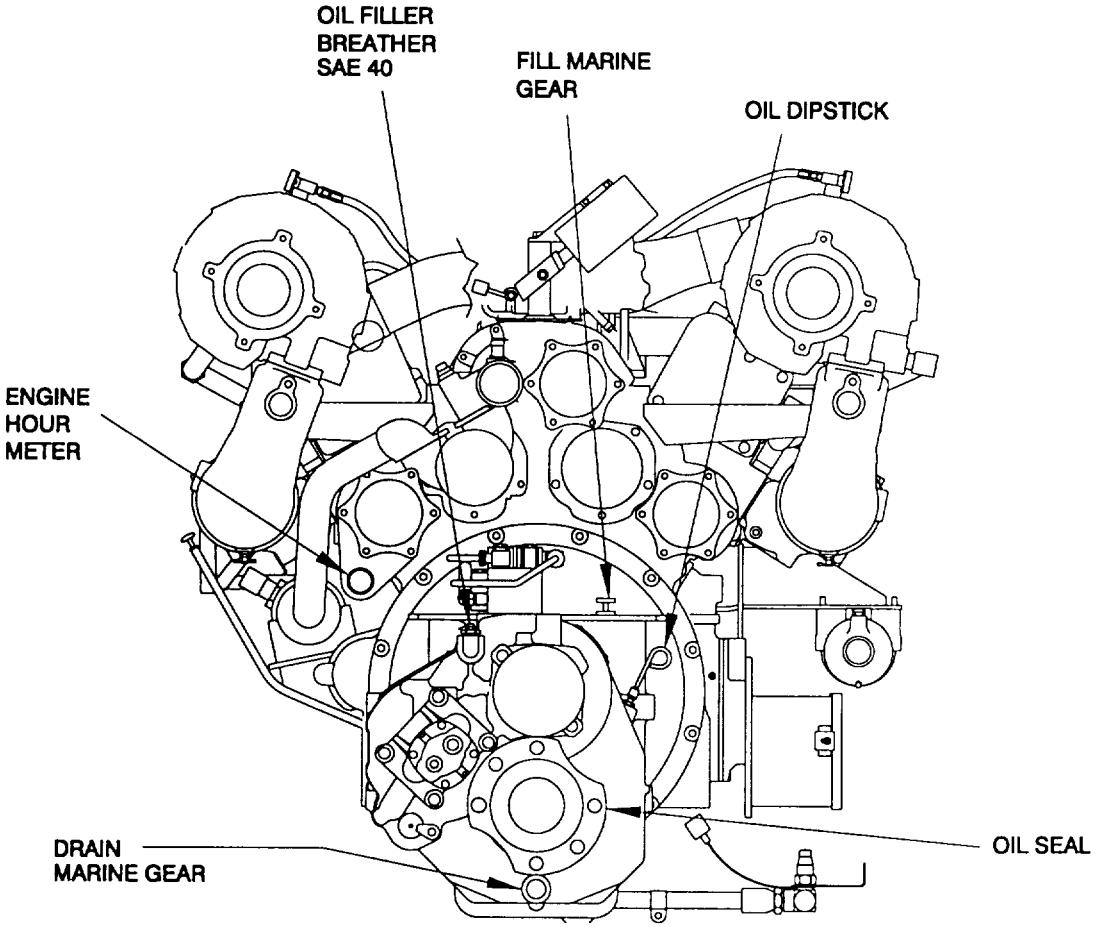

Table 2-20. Operator/Crew Preventive Maintenance Checks and Services (PMCS)

ITEM NO.	INTERVAL	LOCATION ITEM TO CHECK / SERVICE	PROCEDURE	NOT FULLY MISSION CAPABLE IF:
24	Before	Transfer Case	Check oil level in Transfer Case. Oil should be present at bottom of plug. Add oil per LO 55-1945-205-12. Fill to oil level plug. DO NOT OVERFILL.	Class III oil level leak.

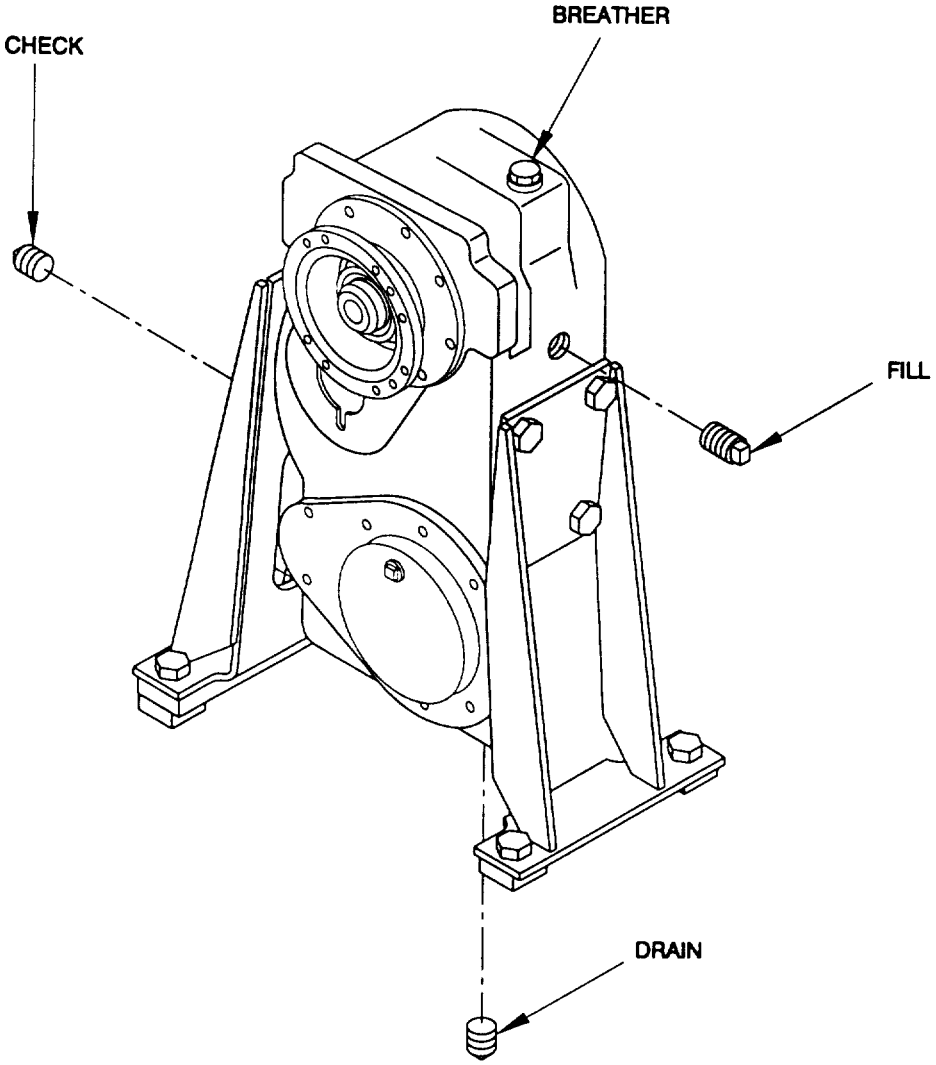

Table 2-20. Operator/Crew Preventive Maintenance Checks and Services (PMCS)

ITEM NO.	INTERVAL	LOCATION ITEM TO CHECK / SERVICE	PROCEDURE	NOT FULLY MISSION CAPABLE IF:
25	Before	Drive Shafts	Inspect drive shafts between marine gear and transfer case and between pump-jet and transfer case. Inspect for physical damage or degradation. Report such damage or degradation to the next higher (UL) level maintenance.	Drive shafts damaged or inoperable.

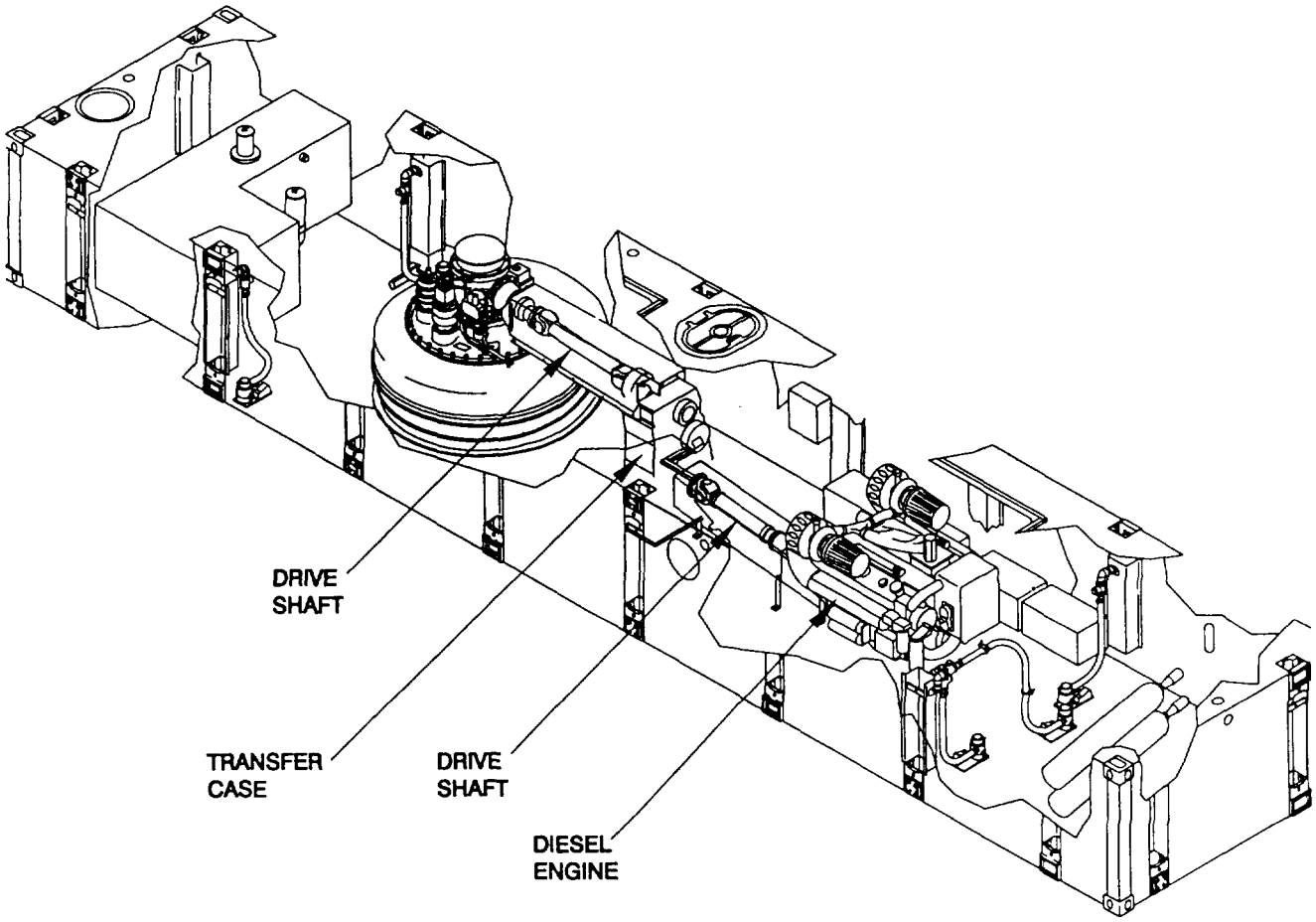

Table 2-20. Operator/Crew Preventive Maintenance Checks and Services (PMCS)

ITEM NO.	INTERVAL	LOCATION ITEM TO CHECK / SERVICE	PROCEDURE	NOT FULLY MISSION CAPABLE IF:
26		Hydraulic System	**WARNING** **Lubrication and hydraulic fluids are hazardous materials. Clean up of fluid spills should be handled with approved procedures. Failure to comply may result in serious injury to personnel.**	
	Before		Inspect all hydraulic components, including way-valve assembly, hydraulic pump, hydraulic reservoir, hand pump and pump-jet main and auxiliary planetary gear housings for evidence of hydraulic fluid leakage. Determine the cause of any leakage and repair or replace parts as required.	Class III hydraulic leak
27		Hydraulic Reservoir	**WARNING** **Lubrication and hydraulic fluids are hazardous materials. Clean up of fluid spills should be handled with approved procedures. Failure to comply may result in serious injury to personnel.**	
	Before		Check that reservoir fluid level is more than 1/2 full but less than 3/4 full in the sight gage.	Oil level below 1/2 full.
	During		Check return filter dirt indicator. Dirt level must be at acceptable level as displayed on indicator.	Dirt level out of acceptable range (in in red colored area) as indicated on dirt alarm.

Table 2-20. Operator/Crew Preventive Maintenance Checks and Services (PMCS)

ITEM NO.	INTERVAL	LOCATION ITEM TO CHECK / SERVICE	PROCEDURE	NOT FULLY MISSION CAPABLE IF:
26-27 Con't				

26-27 Con't

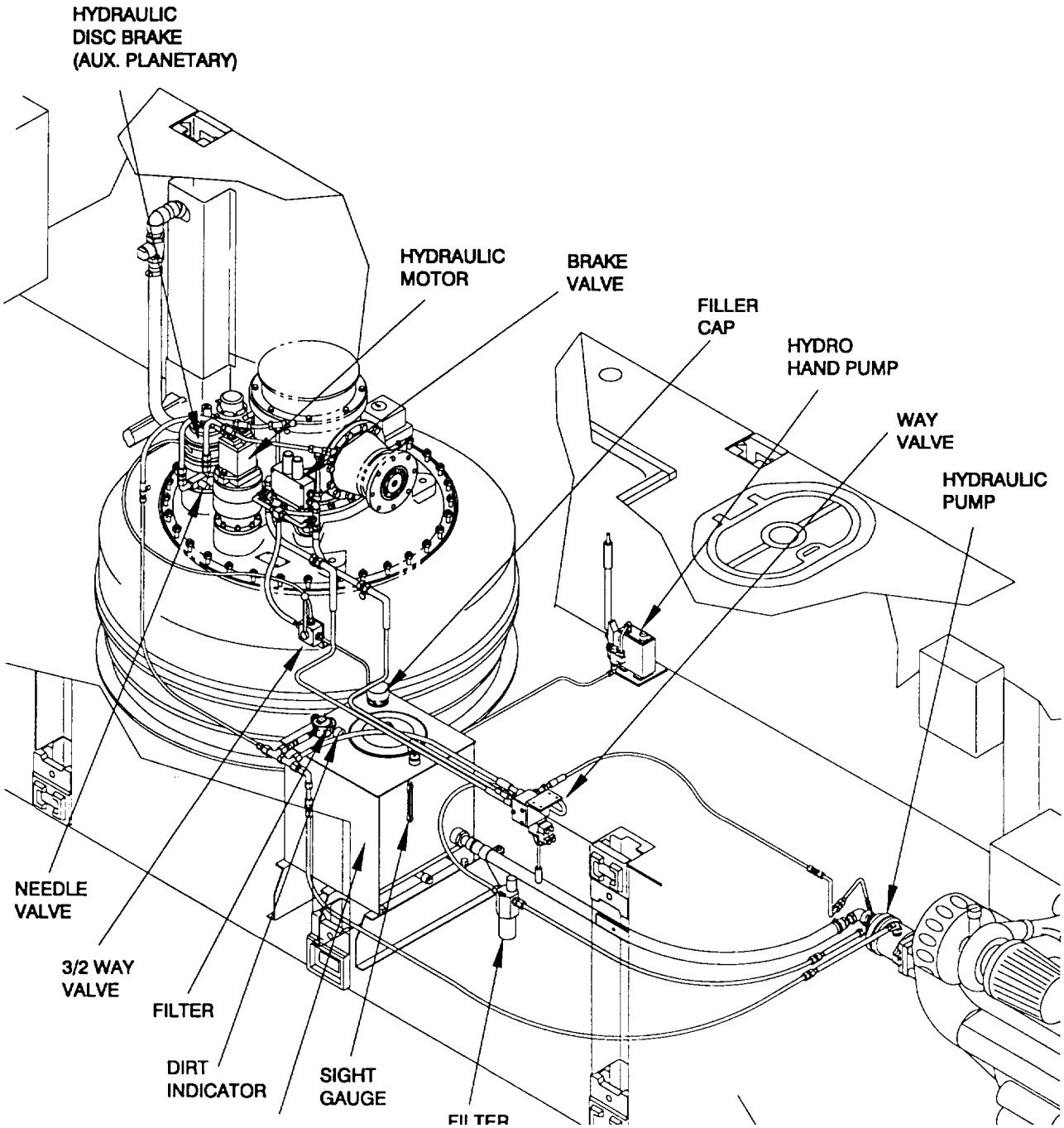

Table 2-20. Operator/Crew Preventive Maintenance Checks and Services (PMCS)

ITEM NO.	INTERVAL	LOCATION ITEM TO CHECK / SERVICE	PROCEDURE	NOT FULLY MISSION CAPABLE IF:
28	Before	Emergency Steering Hand Pump	a. Turn and pull out dipstick and ensure oil level is at FULL mark.	Reservoir cracked, leaking, or leak in hydraulic line.

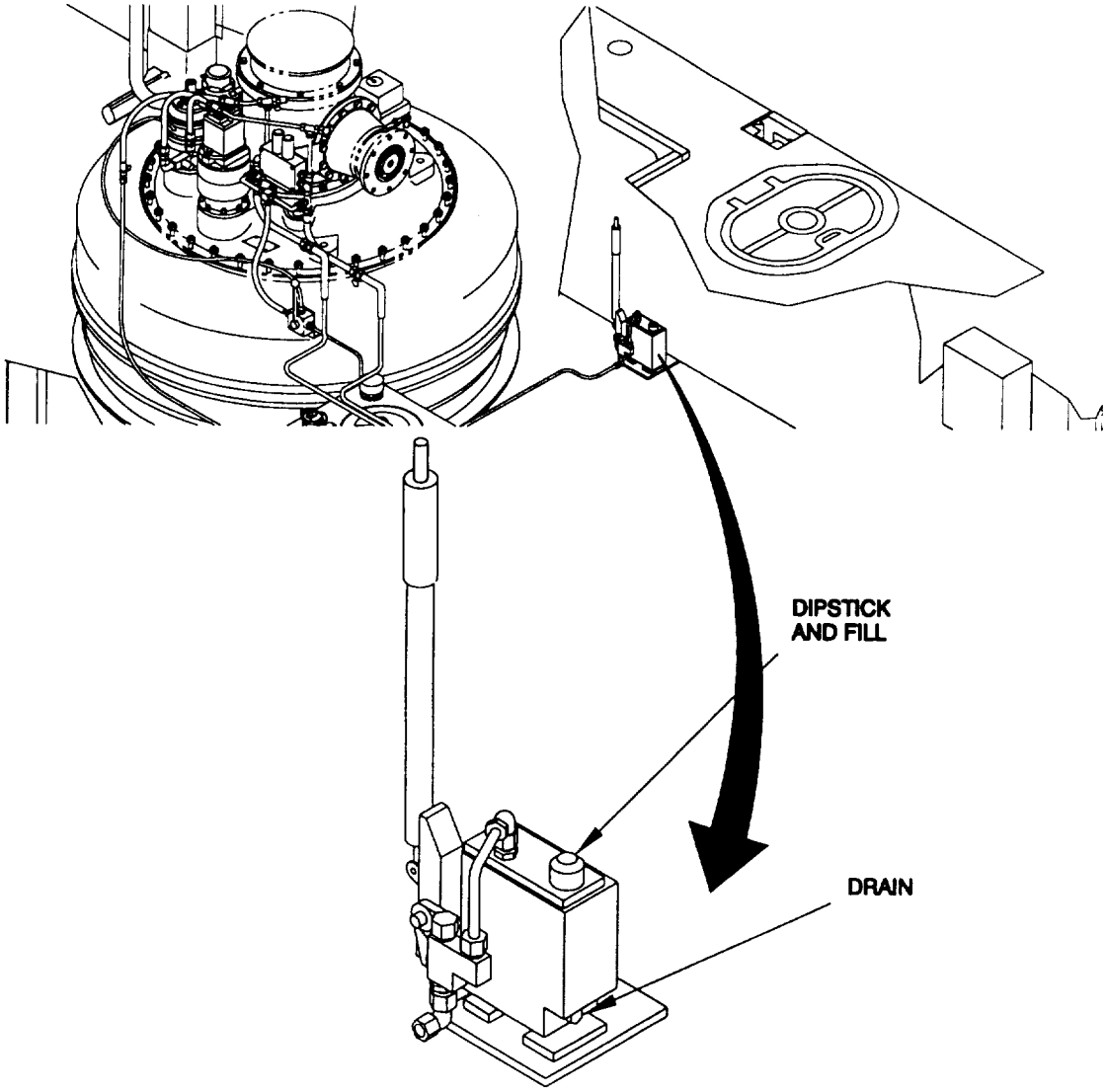

Table 2-20. Operator/Crew Preventive Maintenance Checks and Services (PMCS)

ITEM NO.	INTERVAL	LOCATION ITEM TO CHECK / SERVICE	PROCEDURE	NOT FULLY MISSION CAPABLE IF:
29		Pump-Jet	**WARNING** **Lubrication and hydraulic fluids are hazardous materials. Clean up of fluid spills should be handled with approved procedures. Failure to comply may result in serious injury to personnel.** **Machinery guards shall be installed during all periods of operation. The guards protect rotating drive train components. Failure to comply may result in serious injury to personnel.** **Prevent contact with hot fluids or hot components while inspecting drive train components. Components may reach temperatures up to 200° F. during normal operation. Failure to comply may result in serious injury to personnel.**	
	Before		a. Check oil level of Pump-Jet is at the level of the pipe plug at the forward (nearest drive shaft), top of pump-jet in cold condition. Add lube oil as necessary. (Reference LO 55-1945-205-12) DO NOT OVERFILL.	Class III hydraulic leakage.
	During		b. Inspect pump-jet assembly for unusual noise or vibration.	Unusual noise or vibration.
	Before		c. Check the integrity of the expansion tank.	

Table 2-20. Operator/Crew Preventive Maintenance Checks and Services (PMCS)

ITEM NO.	INTERVAL	LOCATION ITEM TO CHECK / SERVICE	PROCEDURE	NOT FULLY MISSION CAPABLE IF:
29 Con't				

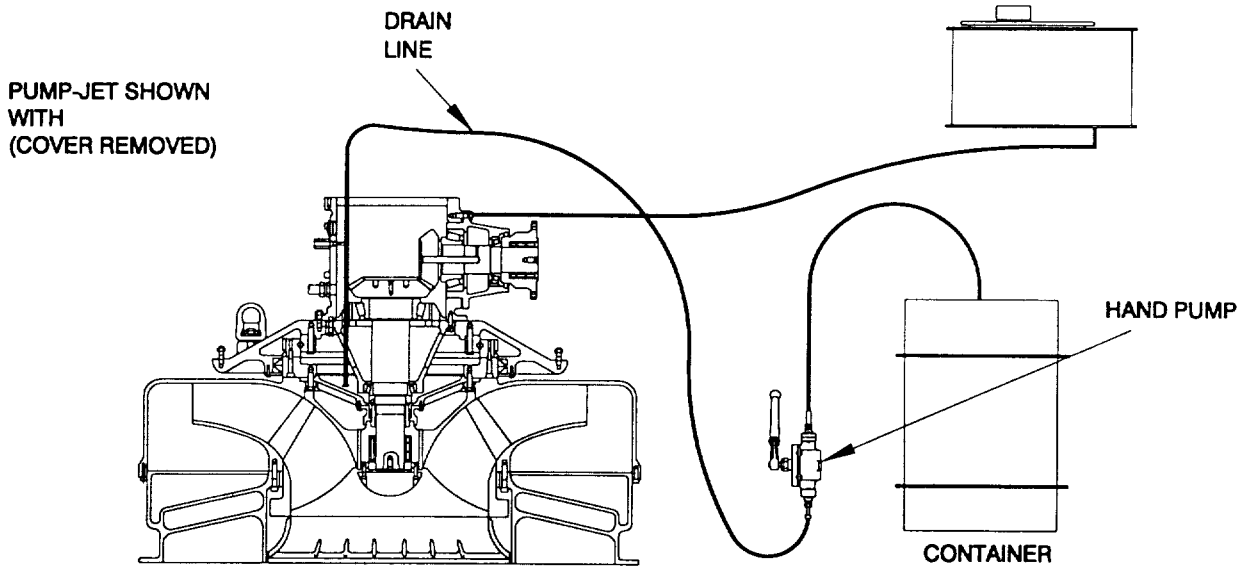

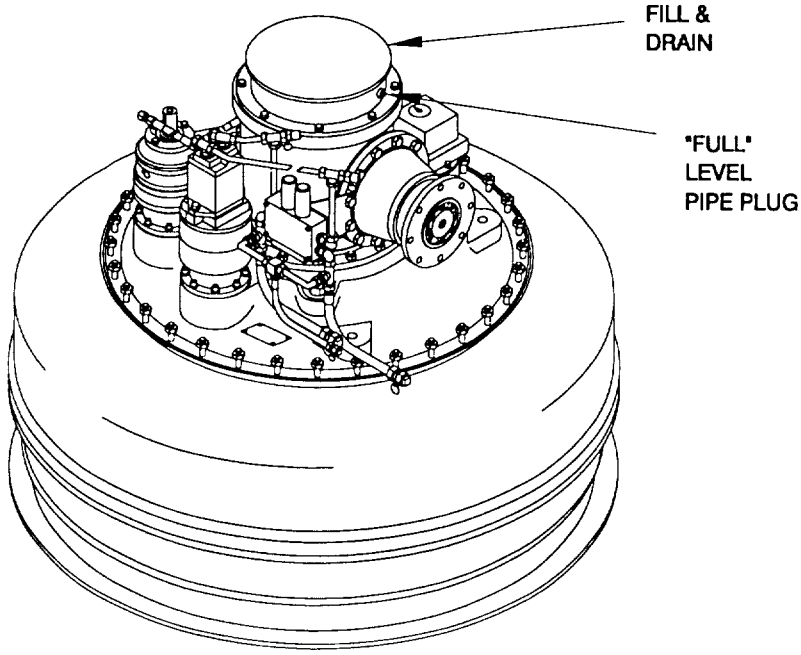

Table 2-20. Operator/Crew Preventive Maintenance Checks and Services (PMCS)

ITEM NO.	INTERVAL	LOCATION ITEM TO CHECK / SERVICE	PROCEDURE	NOT FULLY MISSION CAPABLE IF:
30		Propulsion Module Circuit Breaker Panel	**NOTE** **Turn ENGINE power circuit breaker ON upon completion of below deck PMCS inside of the machinery compartment and before resuming below deck PMCS in the fuel compartment and lazaret.**	
	Before		Turn ENGINE Power circuit breaker ON. Ensure all remaining circuit breakers are in ON position.	

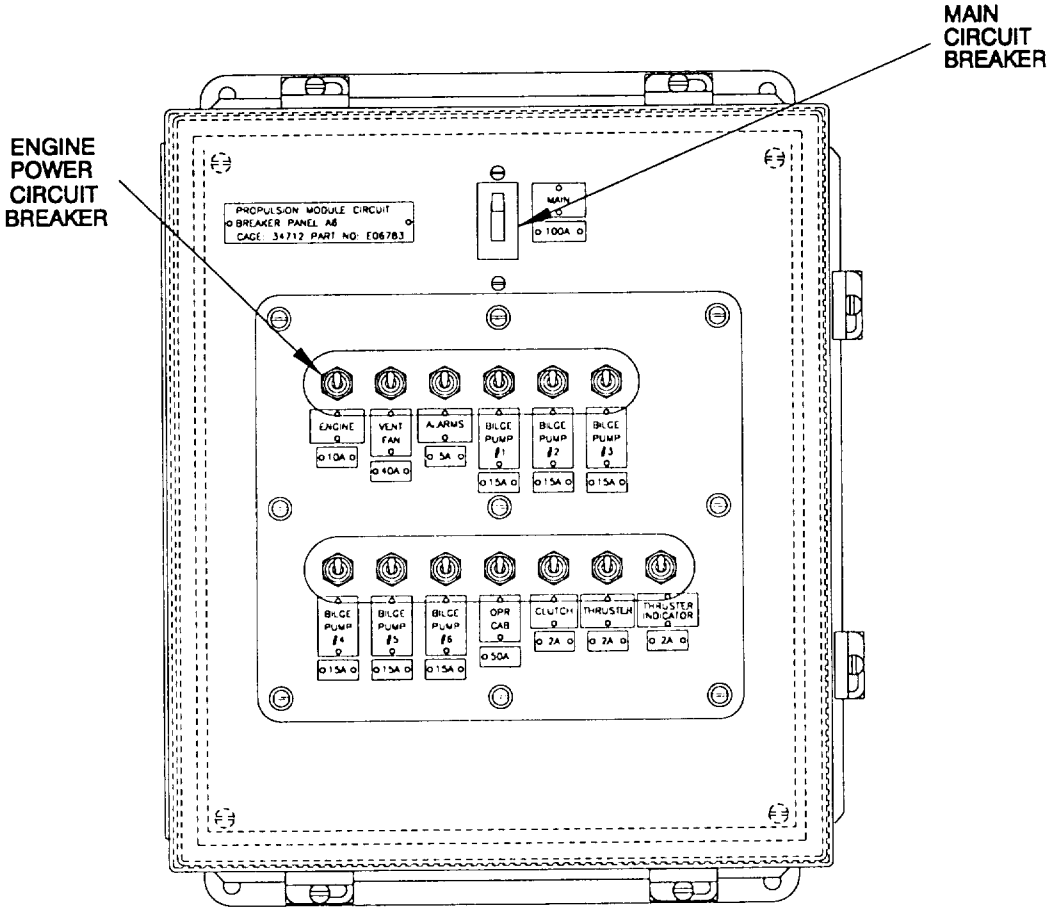

Table 2-20. Operator/Crew Preventive Maintenance Checks and Services (PMCS)

ITEM NO.	INTERVAL	LOCATION ITEM TO CHECK / SERVICE	PROCEDURE	NOT FULLY MISSION CAPABLE IF:
31		Fuel System	**WARNING** **Fuel and engine oil are highly flammable. Sparks or open flames should be kept away. Failure to comply may result in serious injury or death to personnel.** **Provide adequate ventilation of the vessel spaces. Failure to comply may result in serious injury or death to personnel.** **Use approved procedures when cleaning up fuel spills. Take proper precautions when removing or installing any fuel system component. Failure to comply may result in serious injury or death to personnel.**	
	Before After		a. Check for leaks around fuel tank and fuel lines. If any are found, determine the cause and repair and/or replace parts as required to fix the problem.	Class I fuel leakage.
	Before After		b. Examine fuel lines and flexible hoses for leaks. Check that fittings, clamps and ties are secure. Hoses must not be resting or touching shafts, couplings, heated surfaces, sharp edges, or other areas that might sever or rupture fuel system parts.	Evidence of hose leaks unsecured fittings, clamps and ties.
	Before After		c. Verify fuel tank is full by checking sight level or using a fuel stick. If necessary, add fuel. DO NOT OVER FILL.	

Table 2-20. Operator/Crew Preventive Maintenance Checks and Services (PMCS)

ITEM NO.	INTERVAL	LOCATION ITEM TO CHECK / SERVICE	PROCEDURE	NOT FULLY MISSION CAPABLE IF:
31 Con't		Fuel System - Con't	**WARNING** **Fuel and engine oil are highly flammable. keep flame and sparks away. Failure to comply may result in serious injury or death to personnel.** **Provide adequate ventilation of the vessel spaces. Failure to comply may result in serious injury or death to personnel.** **Use approved procedures when cleaning up fuel spills. Take proper precautions when removing or installing any fuel system component. Failure to comply may result in serious injury or death to personnel.**	
	Before		d. OPEN the fuel supply line ball valve.	
	Before		e. OPEN the fuel return line ball valve.	
	Before After		f. Visually inspect and drain water and/or other contaminants from fuel/water separator into an appropriate container. When pure fuel emerges, close drain cock. Check for leaks around tank. Ensure that fuel water separator was inspected and is operational according to Unit Level maintenance personnel.	Water in fuel prevents engine from starting or, broken fuel separator or glass or Class I fuel leakage.
	After		g. Close fuel supply and return ball valves in both fuel compartments; port and starboard.	

Table 2-20. Operator/Crew Preventive Maintenance Checks and Services (PMCS)

ITEM NO.	INTERVAL	LOCATION ITEM TO CHECK / SERVICE	PROCEDURE	NOT FULLY MISSION CAPABLE IF:
31 Con't				

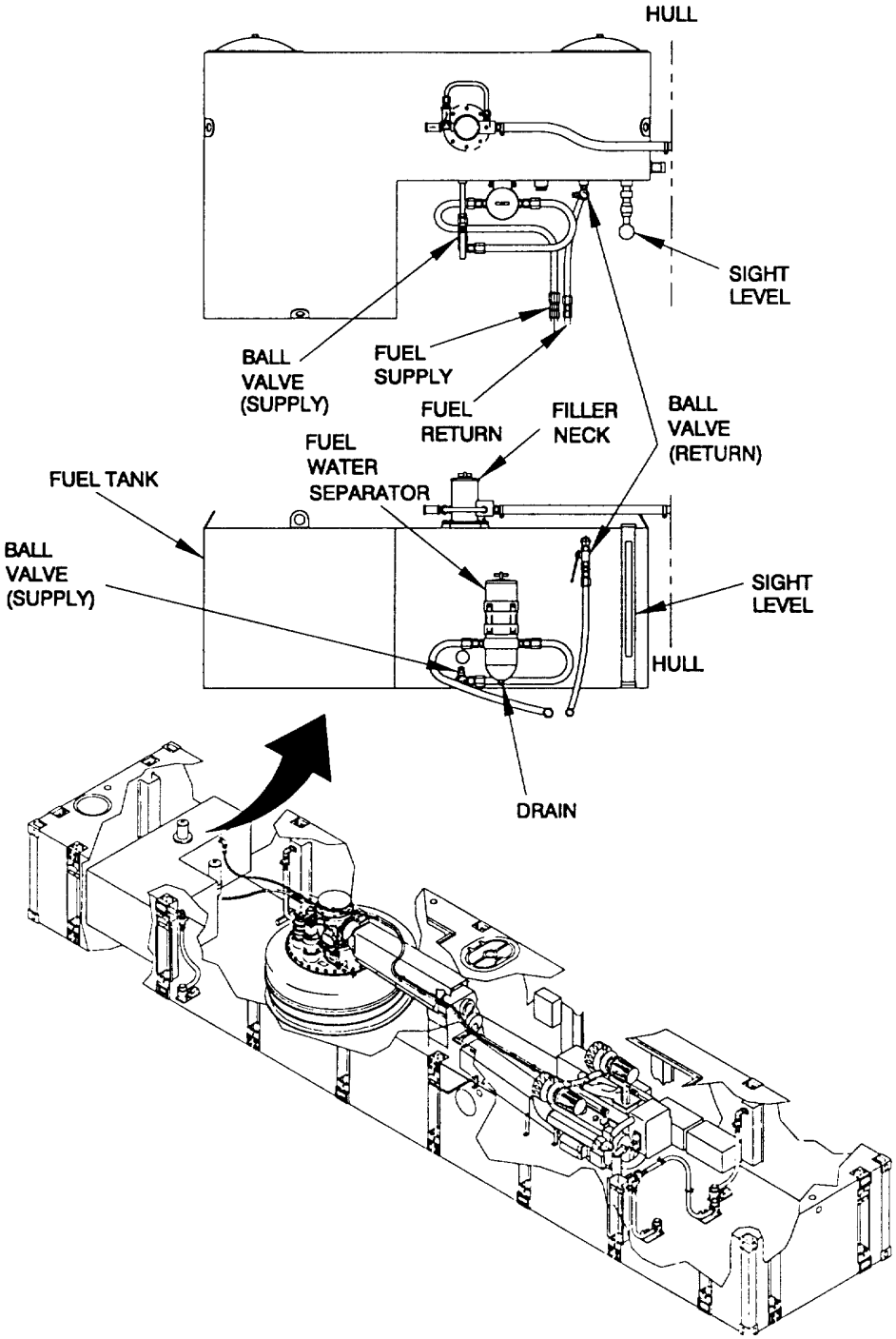

Table 2-20. Operator/Crew Preventive Maintenance Checks and Services (PMCS)

ITEM NO.	INTERVAL	LOCATION ITEM TO CHECK / SERVICE	PROCEDURE	NOT FULLY MISSION CAPABLE IF:
32	Before After	Bilge Pump System (Lazaret)	a. Check compartment for evidence of water and leaks. b. If water is present, activate bilge pump, as indicated by RED FLOOD location light on the operator's cab control console in the operator's cab, by pushing the adjacent bilge pump pushbutton. Once water is removed, the bilge pump will automatically stop.	
	Before		c. Test pump by momentarily holding toggle switch in the TEST position and listening for pump operation. Switch will spring -return to the REMOTE position. d. Clean debris from the float switch and bilge pump suction inlet screen. Wipe clean all bilges.	

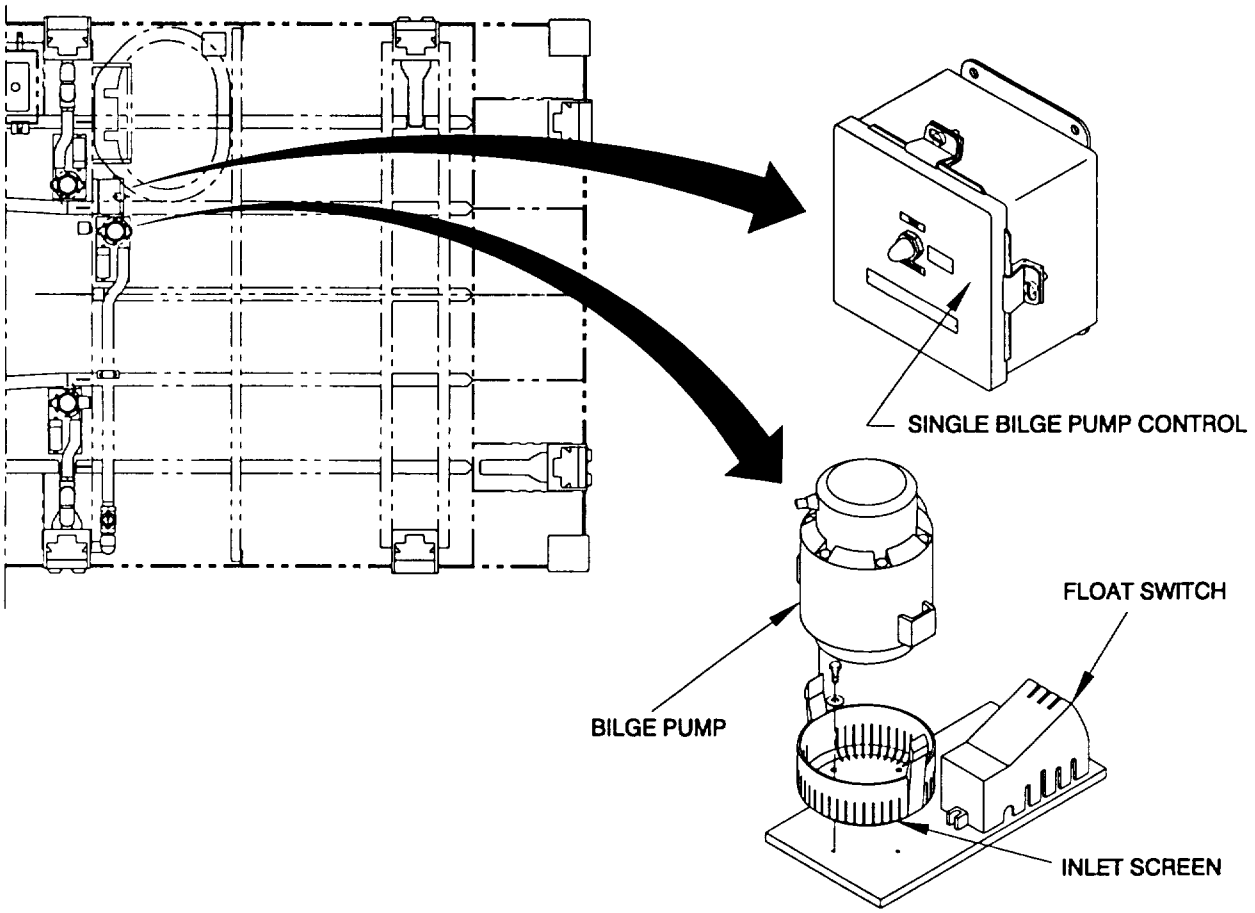

Table 2-20. Operator/Crew Preventive Maintenance Checks and Services (PMCS)

ITEM NO.	INTERVAL	LOCATION ITEM TO CHECK / SERVICE	PROCEDURE	NOT FULLY MISSION CAPABLE IF:
33	Before After	Emergency Steering Control Stand (stowed in lazaret).	Visually inspect control stand for obvious damage, evidence of corrosion, wear, and loose or missing parts.	Control stand is inoperable

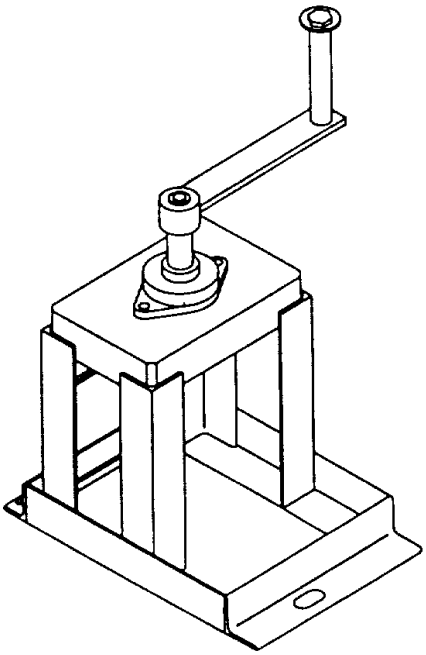

Table 2-20. Operator/Crew Preventive Maintenance Checks and Services (PMCS)

ITEM NO.	INTERVAL	LOCATION ITEM TO CHECK / SERVICE	PROCEDURE	NOT FULLY MISSION CAPABLE IF:
34	Before	Fire Suppression System	**WARNING** **Use extreme care when inspecting or servicing CO_2** a. Inspect for discharge, leakage, or expansion. Look for damaged or broken seals.	Seals are damaged or broken, or evidence of excessive discharge is found.

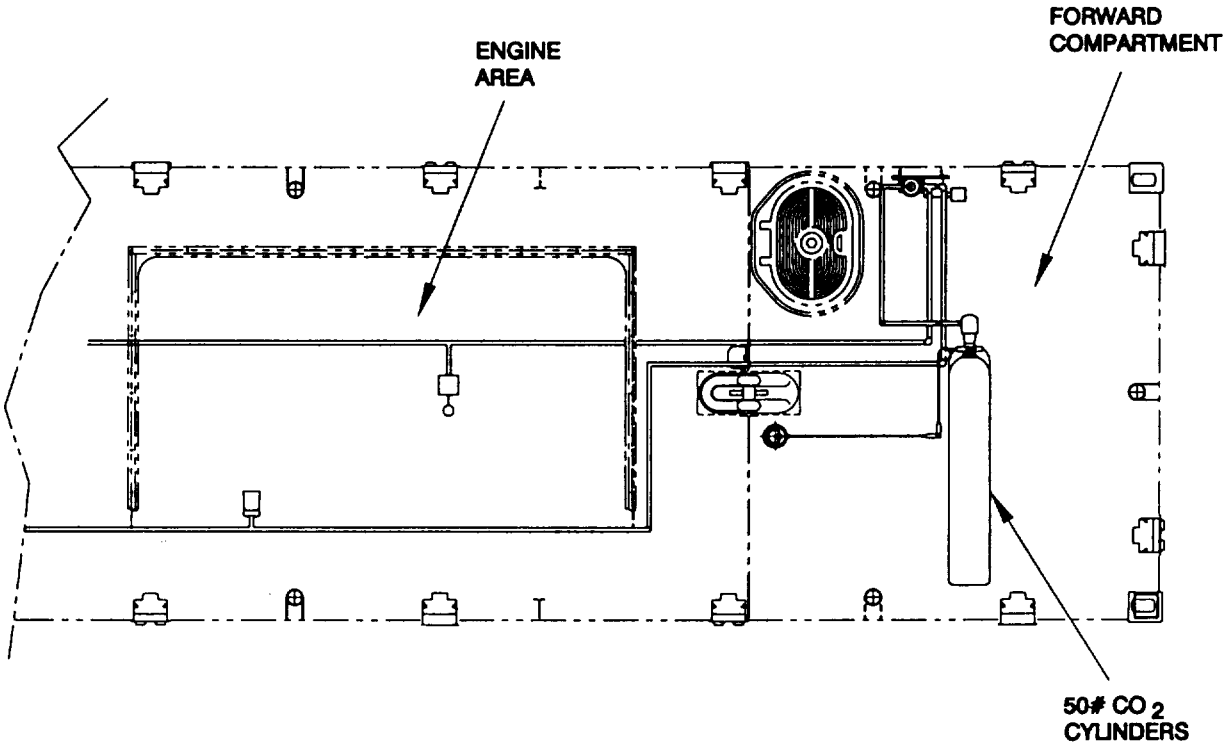

Table 2-20. Operator/Crew Preventive Maintenance Checks and Services (PMCS)

ITEM NO.	INTERVAL	LOCATION ITEM TO CHECK / SERVICE	PROCEDURE	NOT FULLY MISSION CAPABLE IF:
35	Before After	Operator's Cab	Make visual inspection of the operator's cab. Check structure for damage to mountings. Check door, windows, and all bracket mountings both inside and outside the cab. Visually inspect cab mounted antennas, spotlight, bell, horn and mast. Repair and/or replace as necessary.	Damage to structure, brackets, windows, door, mast or cab mounted components.
	Before During		Navigational Horn. Operational.	Navigational horn is a safety requirement and must be operational.
	Before During		Windshield Wiper. Operational	
	Before During		Spotlight. Operational.	
	Before		Battle Lantern. Operational.	
	Before During After		Communication Equipment. Operational. This includes hand radios, VHF-FM radio, and SINCGARS equipment. Also inspect antenna, cables, handsets, and batteries.	VHF-FM radio is a safety requirement and must be operational.

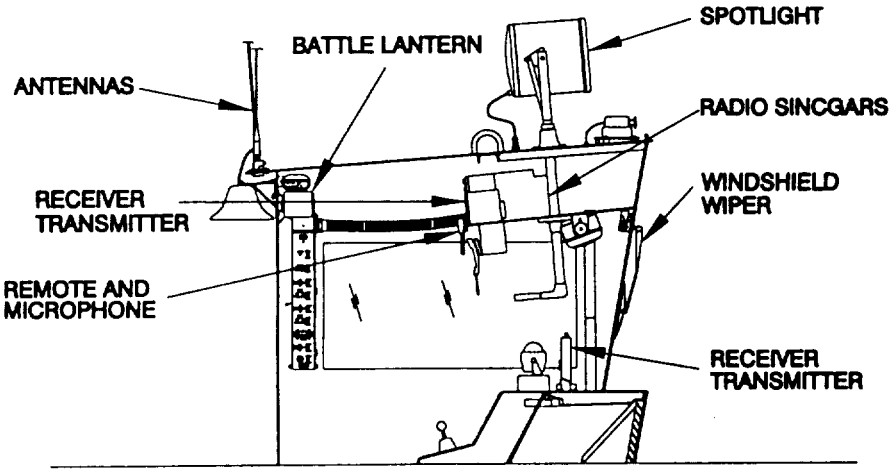

Table 2-20. Operator/Crew Preventive Maintenance Checks and Services (PMCS)

ITEM NO.	INTERVAL	LOCATION ITEM TO CHECK / SERVICE	PROCEDURE	NOT FULLY MISSION CAPABLE IF:
36	Before	Lower Control Panel	Check all control panels and associated switches, gauges, steering levers, throttle and other controls and indicators for obvious damage. Repair and/or replace as necessary.	Damage or non-functioning control panels and associated switches gauges, steering levers, throttle and other controls and indicators.
			HPU OIL LEVEL LOW indicator light(s). Port and Stbd, RED, indicator light(s) OFF. If ON, check and fill appropriate hydraulic tank to proper level.	Fluid level in the hydraulic tank is not between 1/2 and 3/4 full in the sight gage.
			THRUSTER GEARBOX LOW OIL indicator light(s). Port and Stbd Indicator light(s) OFF. If ON, check and fill appropriate pump-jet gearbox to proper level. **NOTE** **At initial start-up thruster gearbox low oil indicator will go ON momentarily and then go OUT.**	Oil level must be to FULL LEVEL PIPE PLUG in the pump-jet gearbox.

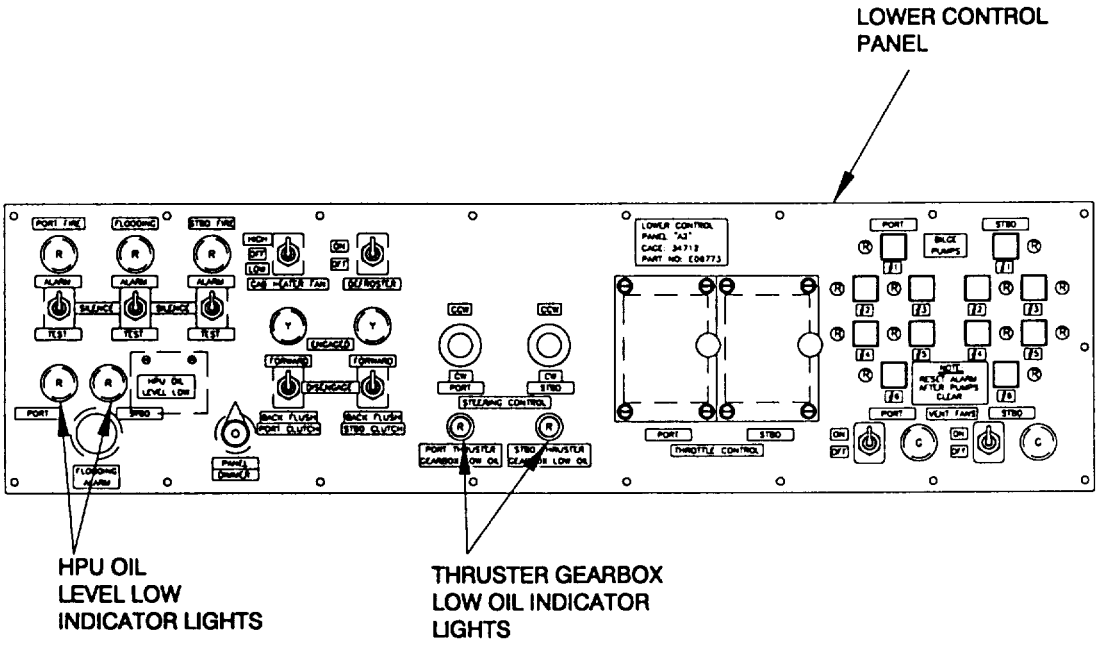

Table 2-20. Operator/Crew Preventive Maintenance Checks and Services (PMCS)

ITEM NO.	INTERVAL	LOCATION ITEM TO CHECK / SERVICE	PROCEDURE	NOT FULLY MISSION CAPABLE IF:
36 Con't	Before During	Lower Control Panel	PORT FIRE ALARM/SILENCE/TEST Switch and Indicator. Select TEST position momentarily. Horn sounds, RED light comes ON. Return switch to ALARM position.	Fire alarms are safety equipment and must be operational.
	Before During		STBD FIRE ALARM/SILENCE/TEST Switch and Indicator. Select TEST position momentarily. Horn sounds, RED light comes ON. Return switch to ALARM position.	
	Before During		FLOODING ALARM/SILENCE/TEST Switch and Indicator. Select TEST position momentarily. Horn sounds, RED light comes ON. Return switch to ALARM position.	Flooding alarm is safety equipment and must be operational.
	Before During		CAB HEATER FAN Switch. Operational.	
	Before During		DEFROSTER Switch. Operational.	
	Before During		PANEL DIMMER Dial Switch. Operational.	

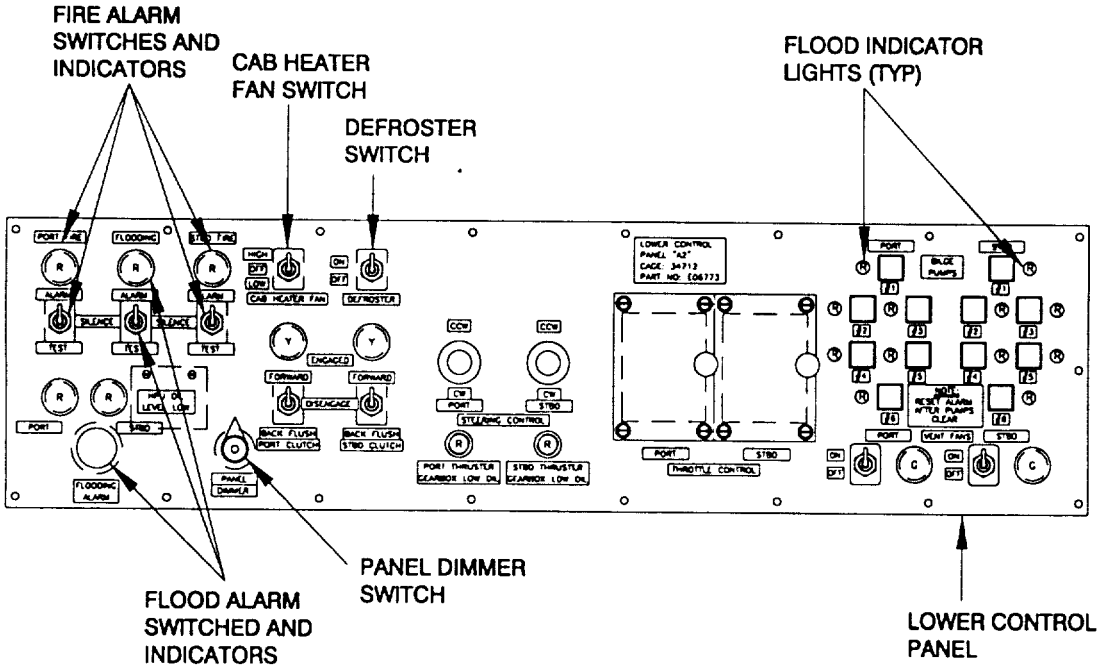

TABLE 2-20. Operator/Crew Preventive Maintenance Checks and Services (PMCS)

ITEM NO.	INTERVAL	LOCATION ITEM TO CHECK / SERVICE	PROCEDURE	NOT FULLY MISSION CAPABLE IF:
36 Con't	Before During	Lower Control Panel	THROTTLE CONTROL Lever(s) Port and Stbd control levers move easily back and forth. Return throttle levers to the idle position.	Control levers inoperable
			STEERING CONTROL Joystick Lever(s). Port and Stbd levers move freely back and forth.	Control levers inoperable.
			PORT/STBD CLUTCH Toggle Switch(es) and Indicator(s): a. Place toggle switches in the FORWARD and then BACK FLUSH positions. ENGAGED Indicator YELLOW lights will come ON in both positions. b. Place toggle switches in the DISENGAGED position. YELLOW indicator lights are OFF.	Switch and/or indicator inoperable.

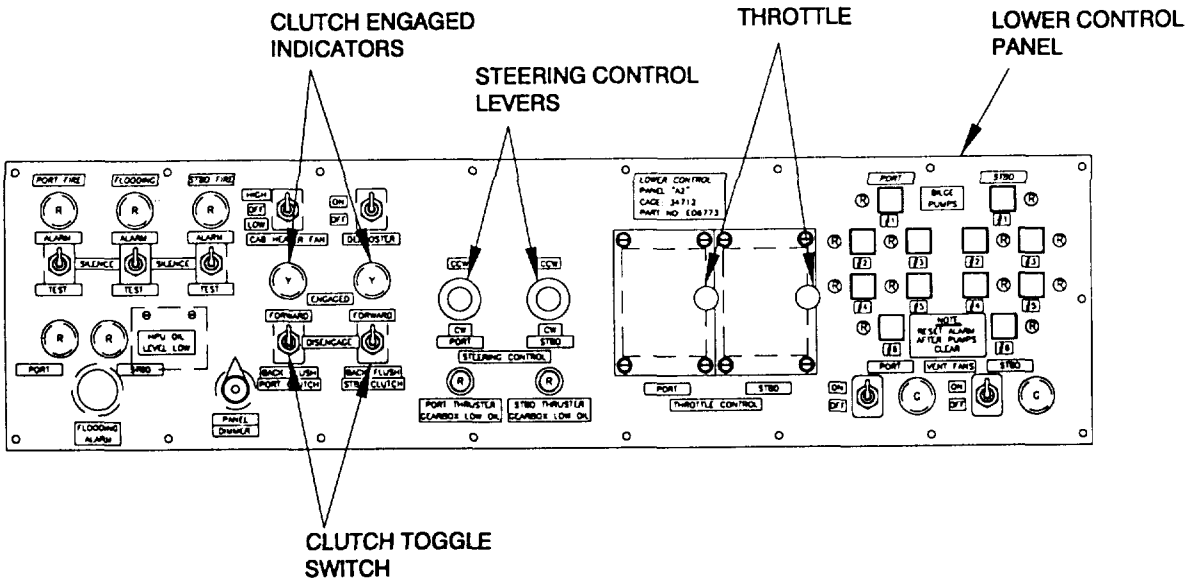

TABLE 2-20. Operator/Crew Preventive Maintenance Checks and Services (PMCS)

ITEM NO.	INTERVAL	LOCATION ITEM TO CHECK / SERVICE	PROCEDURE	NOT FULLY MISSION CAPABLE IF:
37	Before During	Middle Control Panel	NAV HORN Pushbutton. Momentarily press pushbutton. Horn sounds.	Navigational horn is a safety requirement And must be operational.
	Before During		SPOTLIGHT Switch. Switch to ON position. Spotlight comes ON. Return Switch to OFF position.	Spotlight not operational.
	Before During		WSHLD WIPER Switch. Switch to ON position. Windshield wiper comes ON. Return switch to OFF position.	Windshield wiper not operational.
	Before		ENG GAGES TEST Switch(es). Momentarily hold Port and Stbd switches in the TEST position to activate engine status gages.	
	Before		ENG ALARM/TEST/SILENCE Switch(es) and Indicator(s): a. Momentarily hold PORT and STBD toggle switches in the TEST position. Alarm bell will sound and RED indicator(s) will come ON. b. Return switch to the ALARM position when test is complete.	Alarm not functioning.

TABLE 2-20. Operator/Crew Preventive Maintenance Checks and Services (PMCS)

ITEM NO.	INTERVAL	LOCATION ITEM TO CHECK / SERVICE	PROCEDURE	NOT FULLY MISSION CAPABLE IF:
37 Con't				

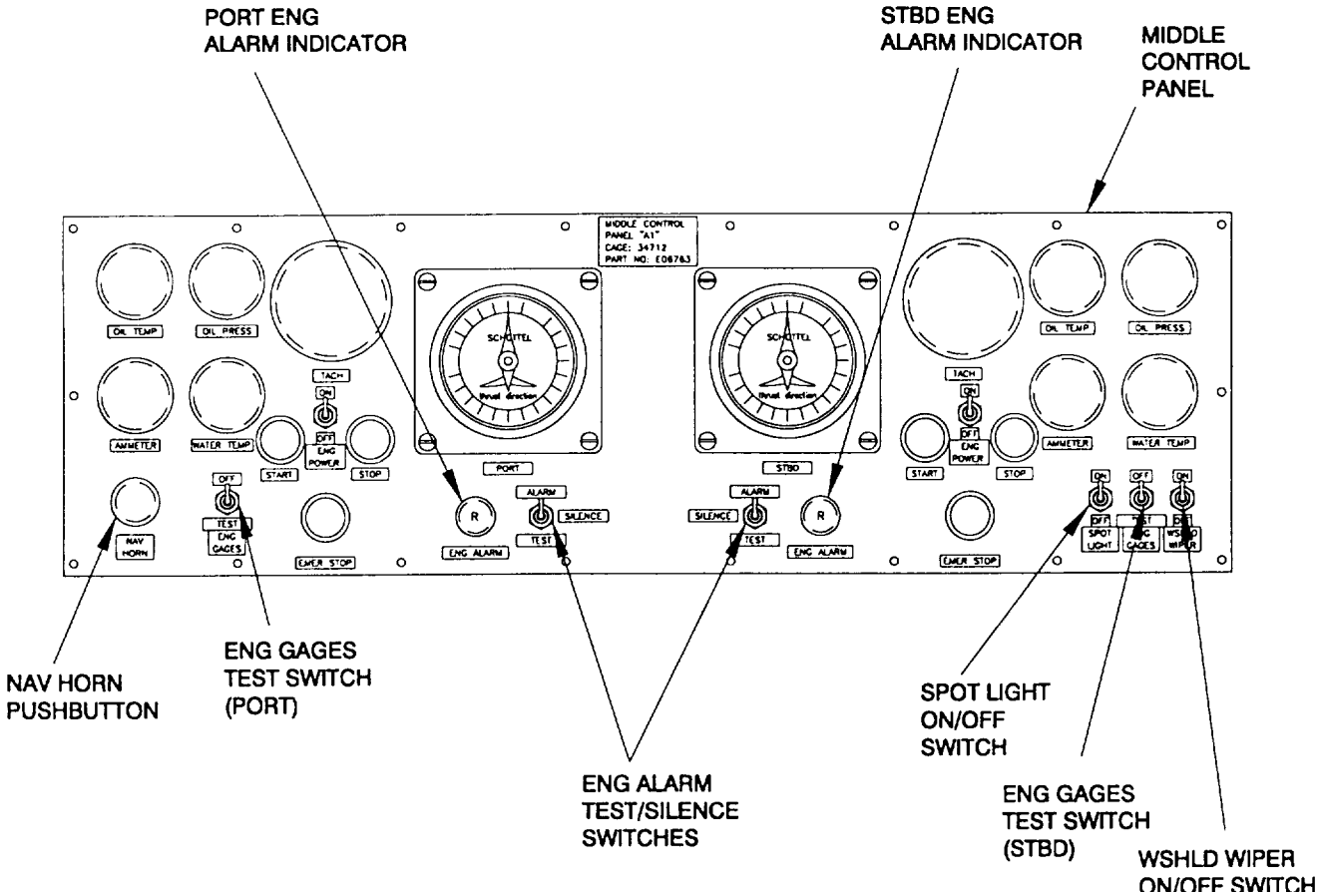

TABLE 2-20. Operator/Crew Preventive Maintenance Checks and Services (PMCS)

ITEM NO.	INTERVAL	LOCATION ITEM TO CHECK / SERVICE	PROCEDURE	NOT FULLY MISSION CAPABLE IF:
38			Engine Start-Up:	
	Before		a. Verify that below deck PMCS is complete and that no personnel are in the machinery compartment.	
	Before After	Lower Control Panel	b. Verify that PORT and STBD THROTTLE CONTROL levers are in the idle (all the way towards operator) position and that PORT and STBD CLUTCHes are DISENGAGED.	
	Before	Middle Control Panel	c. Switch POWER ON/OFF toggle switch(es) to ON position.	
	Before		d. Depress START pushbutton(s) to start the diesel. If engine fails to start within 15 seconds, release the start pushbutton and allow the starter motor to cool for 15 seconds before trying again.	Alarm bell persists after initial engine start-up. Engine fails to start after four attempts.
	Before During		e. Monitor engine OIL PRESS gauges. If no oil pressure is indicated within 15 seconds of engine startup (40-70 PSI), shut down engine by pushing engine STOP push button.	No oil pressure within 15 seconds. Oil pressure indication not between 40-70 PSI.
			Engine Warm-Up:	
	Before After	Middle Control Panel	f. Run engine at idle for at least 5 minutes to allow it to warm up prior to applying a load.	
	Before During		g. Monitor engine WATER TEMP gauge(s). Indication should be between 120°F. - 140°F, and not to exceed 185°F.	Water temperature exceeds 185°F.
	Before During		h. Monitor engine OIL TEMP gauge(s). Indication should be between 215°F - 230°F.	Oil temperature exceeds 230°F.
	Before During		i. Verify TACH(s) are functioning.	
	Before During		j. Verify AMMETER(s) are functioning	0 amps registering on meter.

TABLE 2-20. Operator/Crew Preventive Maintenance Checks and Services (PMCS)

ITEM NO.	INTERVAL	LOCATION ITEM TO CHECK / SERVICE	PROCEDURE	NOT FULLY MISSION CAPABLE IF:
38 Con't			Engine Shut-Down:	
	After	Lower Control Panel	k. Verify that PORT and STBD THROTTLE CONTROL levers are in the idle (all the way towards operator) position and that PORT and STBD CLUTCHes are DISENGAGED.	
	After		l. Run engine at idle for at least 5 minutes to allow it to cool down prior to shut-down.	
	After	Middle Control Panel	m. Depress STOP pushbufton to shut-down the diesel.	
	After		n. Switch POWER ON/OFF toggle switch to OFF position.	
	After	Lower Control Panel	o. Switch VENT FAN toggle switches to OFF position.	

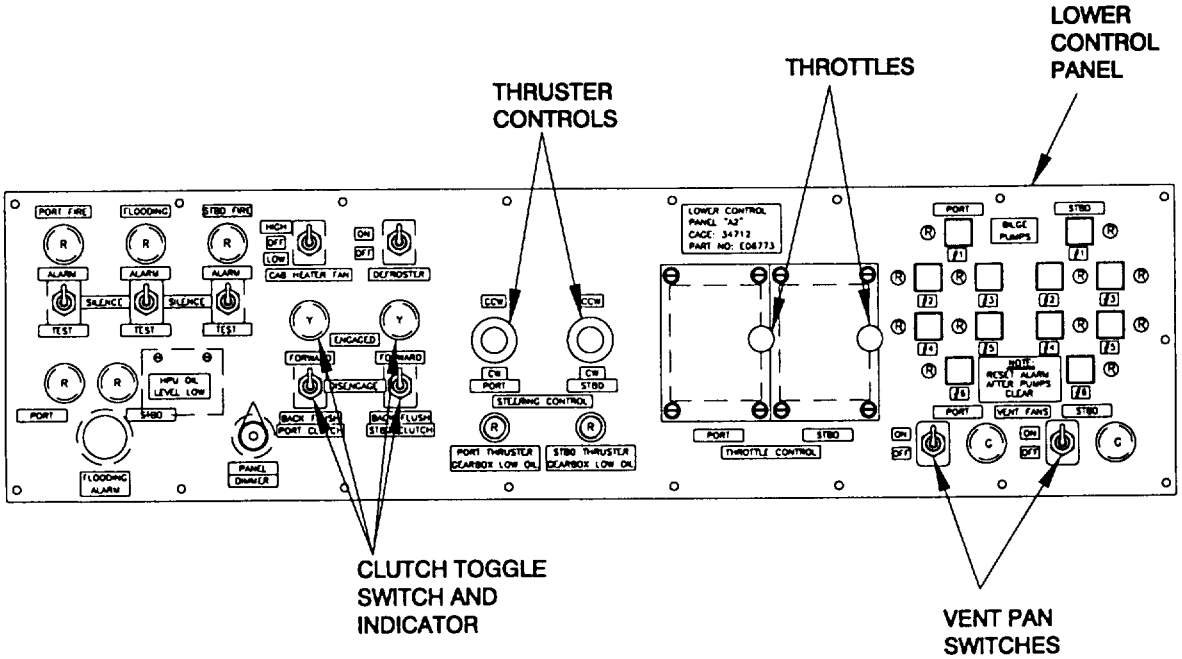

TABLE 2-20. Operator/Crew Preventive Maintenance Checks and Services (PMCS)

ITEM NO.	INTERVAL	LOCATION ITEM TO CHECK / SERVICE	PROCEDURE	NOT FULLY MISSION CAPABLE IF:
38 Con't				

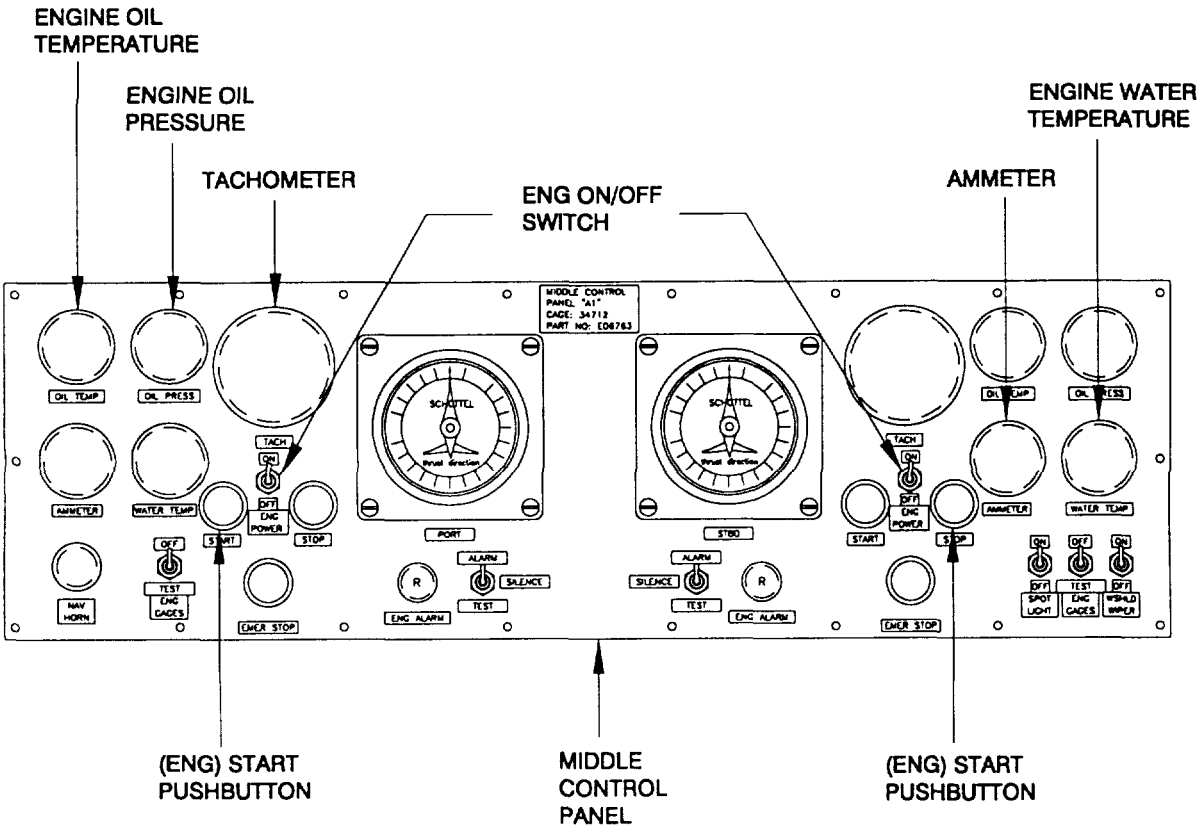

TABLE 2-20. Operator/Crew Preventive Maintenance Checks and Services (PMCS)

ITEM NO.	INTERVAL	LOCATION ITEM TO CHECK / SERVICE	PROCEDURE	NOT FULLY MISSION CAPABLE IF:
39	Before During After	Navigation Masts and Lights	a. Visually inspect navigation mast, stub mast and junction boxes for evidence of corrosion, physical damage, broken welds, missing or broken bolts and/or components. b. Visually inspect cable assemblies for loose connections and evidence of physical damage or wear. c. Visually inspect all navigational lights for cleanliness and evidence of physical damage. d. Ensure that all lights are in working condition by operating the switches on mast enclosure (Nav Light Switch Box) in the cab to the ON and OFF positions. Repair and/or replace components as necessary.	Any navigational light is not in working condition.

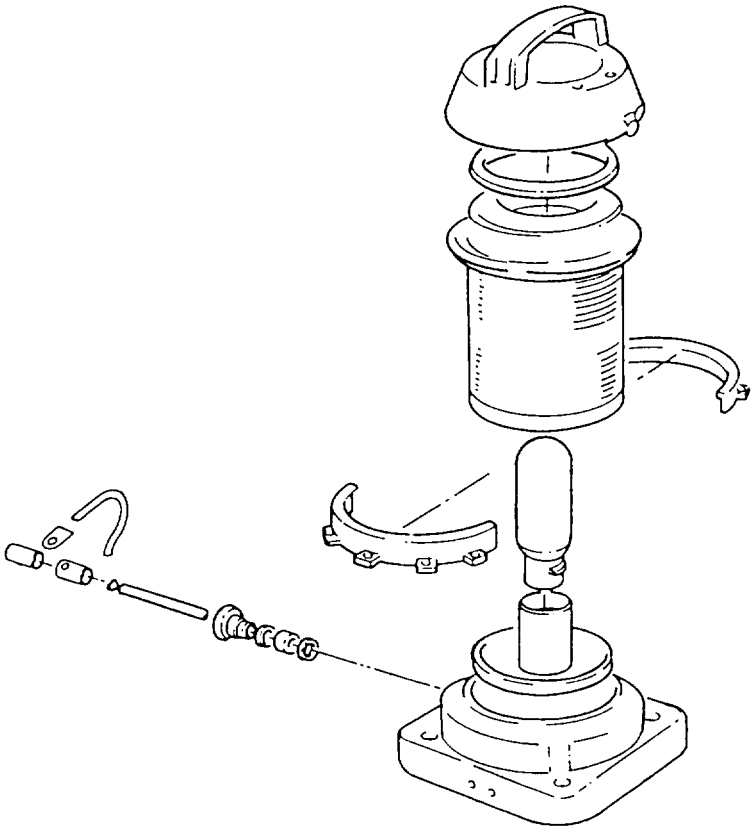

TABLE 2-20. Operator/Crew Preventive Maintenance Checks and Services (PMCS)

ITEM NO.	INTERVAL	LOCATION ITEM TO CHECK / SERVICE	PROCEDURE	NOT FULLY MISSION CAPABLE IF:

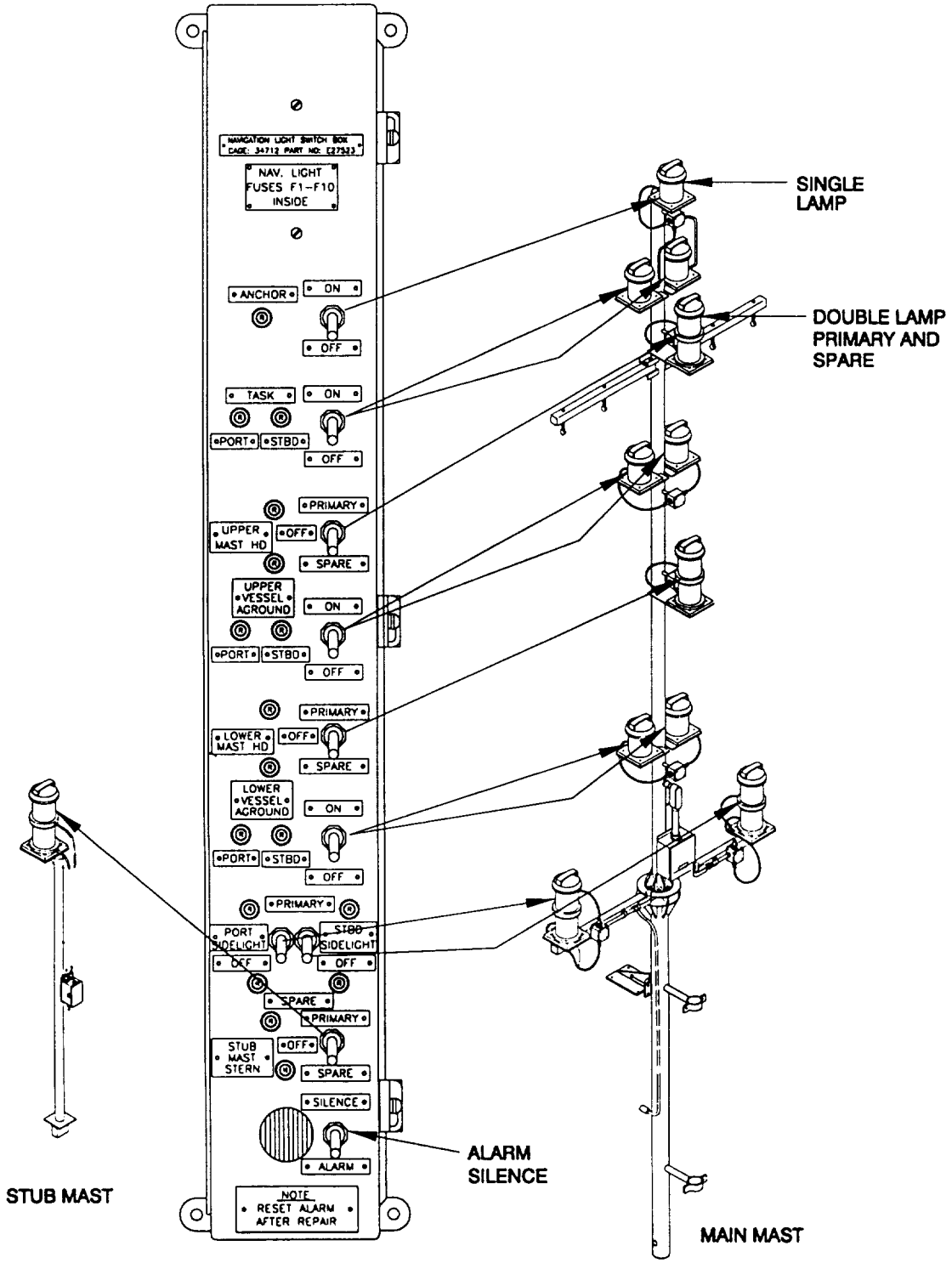

TABLE 2-20. Operator/Crew Preventive Maintenance Checks and Services (PMCS)

ITEM NO.	INTERVAL	LOCATION ITEM TO CHECK / SERVICE	PROCEDURE	NOT FULLY MISSION CAPABLE IF:
40	After	Propulsion Module	a. Check to be sure no one is in any compartments and all access hatches are closed and dogged. b. Clean engine and engine compartment with hot soapy water (use soap not harmful to wiring insulation). Dry thoroughly with clean cloths and mops. c. Remove all communication equipment. d. Remove or secure all tools and crew equipment. e. Secure and lock all hatches and operator's cab.	

Section III. Operation Under Usual Conditions.

2-6 REMOVING AND STAGING MODULE ASSEMBLIES FROM STOWAGE. This section describes the removal of MCF modules and end rakes from stacked ISOPAK stowage. Using Tables 2-21 and 2-22, unpack and inventory section equipment prior to installation.

NOTE

DO NOT throw away or destroy any packing crates as they will be needed for storage when the MCF is disassembled for stowage and transport.

Table 2-21. Container Breakdown by Section Assembly.

Container	Contents	Qty
Beach/Sea End Section Assembly (P/N E19183)		
Box #1	Fender Assembly (P/N E03103)	4
Box #2	D'Ring Mooring Assembly (P/N E07803)	10
Box #3	Mooring Cleat Assembly (P/N E07723)	4
Box #4	Rhino Horn Assembly (P/N E07733)	3
Box #5	Flexor Connector Assembly (P/N E02783)	1
Intermediate Section Assembly (P/N E19193) (Containers for two Intermediate Section Assemblies)		
Box #1	Fender Assembly (P/N E03103)	4
Box #2	Fender Assembly (P/N E03103)	4
Box #3	D'Ring Mooring Assembly (P/N E07803)	10
Box #4	D'Ring Mooring Assembly (P/N E07803)	10
Box #5	Mooring Cleat Assembly (P/N E07723)	4
Box #6	Mooring Cleat Assembly (P/N E07723)	4
Box #7	Flexor Connector Assembly (P/N E02783)	2
Box #8	Flexor Connector Assembly (P/N E02783)	2

Table 2-21. Container Breakdown by Section Assembly.

Container	Contents	Qty
Powered Section Assembly (P/N 19203)		
Box #1	Fire Extinguisher (P/N E08158)	1
	Fire Extinguisher (P/N E08168)	1
	Capscrew Hex Hd. (3/8-16NC x .75 SST) (P/N E19203, Item 21)	6
	Nut, Hex (3/8-16NC SST) (P/N El 9203, Item 22)	6
	Baffle Lantern (P/N E08118-2)	4
	Battle Lantern (P/N E08118-1)	1
	Batteries (P/N E18288)	10
	Discharge Head (P/N E03046, Item 2)	4
	Flex Hose (1/2") (P/N E03046, Item 3)	4
	Control Head (P/N E03046, Item 8)	2
	Spotlight w/Mounting Hardware (P/N E09438)	1
	Gasket (P/N E24701)	1
	SINCGARS Antenna w/Mounting Hardware (P/N E02873 Item 38)	1
	Navigation Bell w/Ringer, Nut & Mounting Bracket (P/N E08278)	1
	Kit, Hydraulic Test (P/N E28943)	1
	Puller Plate (P/N E26106 Item 107)	2
	Puller Plate Bolt (P/N E26106 Item 108)	2
	Navigation Horn w/Mounting Hardware (P/N E08108)	1
	Antenna w/Mount (P/N E06508-2)	1
	Clamp AFT (P/N E23401)	2
	Clamp Fwd (P/N E23411)	2
	Capscrew Soc. Hd. Full Thd. (.5-13NC x 1.75 SST) (P/N E19203, Item 32)	2
	Capscrew Soc. Flat Head (.5-13NC x 2" SST) (P/N E19203, Item 33)	2
	T-Wrench (P/N E23448)	4
	Clamp Mast Upper (P/N E10132)	1
	Mount Mast Upper (P/N E10072)	1
	Capscrew Hex Hd. (.5-1 3NC x 2" SST) (P/N E19203, Item 27)	4
	Nut Hex (.5-13NC SST) (P/N E19203, Item 28)	8
	Capscrew Hex Hd. (1.5-6NC x 7" SST) (P/N E19203, Item 23)	1
	Nut Hex (1.5-6NC SST) (P/N El 9203, Item 24)	1
	Triton Radio Receiver/Transmitter (P/N E06498-1)	1
	Battery Pack (P/N E06498-2)	1
	Hands Free Headset (P/N E06498-3)	1
	Leather Case (P/N E06498-4)	1
Box #2	Handrail (P/N E20642)	12
	Handrail, Connector (P/N E20323)	4
	Handrail, ISO (P/N E20342)	1
	Cable Railing Assembly (P/N E20948-1)	3
	Cable Railing Assembly (P/N E20948-2)	3
	Cable Railing Assembly (P/N E20948-3)	3
	Cable Railing Assembly (P/N E20948-4)	6
	Cable Railing Assembly (P/N E20948-5)	3
	Cable Railing Assembly (P/N E20948-6)	3
	Rail Cable Assembly (P/N E20968)	6
	Shackle, 1 ton (P/N E23718)	3
	Turnbuckle (P/N E03136, Item 5)	18
	Handrail ISO Corner (P/N E25192)	2
	Handrail ISO Corner (P/N E25242)	2
Box #3	Cab Assembly (P/N E02873)	1

Table 2-21. Container Breakdown by Section Assembly.

Container	Contents	Qty
Box #4	Mast, Navigation Lower Subassembly (P/N E03123) w/Stub Mast (P/N E18343)	1
	Portable Cable (P/N E19943)	1
	Mast, Navigation Upper Subassembly (P/N E03123) with mounting hardware (P/N E03123 items 5, 7 and 8)	1
	Lamp (24 VDC) (P/N E08308)	15
	Buoy, Round 24" Dia. (P/N E21378)	1
	Rope, Poly. Prop. 3/8" Dia. x 150' (P/N E20053, Item 15)	1
	Rope, Poly. Prop. 3/8" Dia. x 10' (P/N E20053, Item 16)	1
	Rope Assembly (P/N E21368)	1
	Interconnect Cable Assembly (P/N E03003)	1
	Operator Manual (TM 55-1945-205-10)	1
	Unit DS and GS Maintenance Manual (MCF)(TM 55-1945-205-24-1)	1
	Unit DS and GS Maintenance Manual (Diesel)(TM 55-1945-205-24-2)	1
	Unit DS and GS Maintenance Manual (Marine Transmission (TM 55-1945-205-24-3)	1
	Unit DS and GS Maintenance Manual (Transfer Case)(TM 55-1945-205-24-4)	1
	Repair Parts and Special Tool List (TM 55-1 945-205-24P)	1
	Lubrication Order (LO 55-1945-205-12)	1
Box #5	Fender Assembly (P/N E03103)	4
Box #6	D'Ring Mooring Assembly (P/N E07803)	10
Box #7	Mooring Cleat Assembly (P/N E07723)	4
Box #8	Flexor Connector Assembly (P/N E02783)	1
Skid #1	Exhaust Plenum (P/N E18263)	1
Skid #2	Exhaust Plenum (P/N E18263)	1
Skid #3	Intake Plenum (P/N E12183)	1
Skid #4	Anchor Assembly (P/N E20053) with Shackle (P/N E23308) Qty. 1; and Support Weldment (P/N E21622) Qty. 1	1
Spreader Assembly (P/N E19883)		
Box #1	Bridle Sling (P/N E20988)	2
	Shackle 35 Ton (P/N E20998)	4
	Shackle 55 Ton (P/N E20588)	2
	Shackle 110 Ton (P/N El 9848)	1
Skid #1	Spreader (P/N E19872)	1
P3 Adapter Assembly (P/N E28063)		
Skid #1	P3 Adapter (P/N E28063)	1
Skid #2	P3 Adapter (P/N E28063)	1
Skid #3	P3 Adapter (P/N E28063)	1

2-6.1 Removal From Stowage. Modular Causeway Sections were transported and stowed in ISOPAK configuration. MCF ISOPAK configuration is accomplished by stacking a pair of End Rake Modules, joined nose-to-nose, atop and connected to a Center Module unit as shown in (Figure 2-24). The weight and dimensions of the ISOPAK assembly permit handling as a 40 foot ISO freight container.

2-6.2 MCF Nominal Weights. Nominal weights for MCF modules are as shown in Table 2-22. MCF deck fittings can used to pull and align units together.

WARNING

Modules must never be lifted from deck fittings which only have a rated capacity of 30,000 pounds. Lift shackles have a safe working load capacity of 25 tons. Never use mooring cleats for towing. To do so would present possible injury or death to personnel or severe damage to equipment.

CAUTION

Individual MCF modules maybe punctured and subject to flooding. Precautions should be taken prior to lifting onto or from the water, such as sounding module compartments, to determine the additional weight to be hoisted.

Table 2-22. Module Nominal Weights.

Description	Nominal Dry Weight (Pounds)	Wet Weight with Full Fuel Tank(Pounds)
End Rake, Right Hand Module	11,500	
End Rake, Left Hand Module	11,500	
End Rake, Center Module	10,600	
Center Module	22,500	
Combination Beach/Sea End Rake Module	13,600	
Propulsion Module	39,400	42,700
Powered Section	168,500	175,000
Intermediate Section	134,800	
Beach/Sea Section	141,900	
Beach/Sea Section with P3 Adapters	151,800	
P-3 Adapter	3,300	

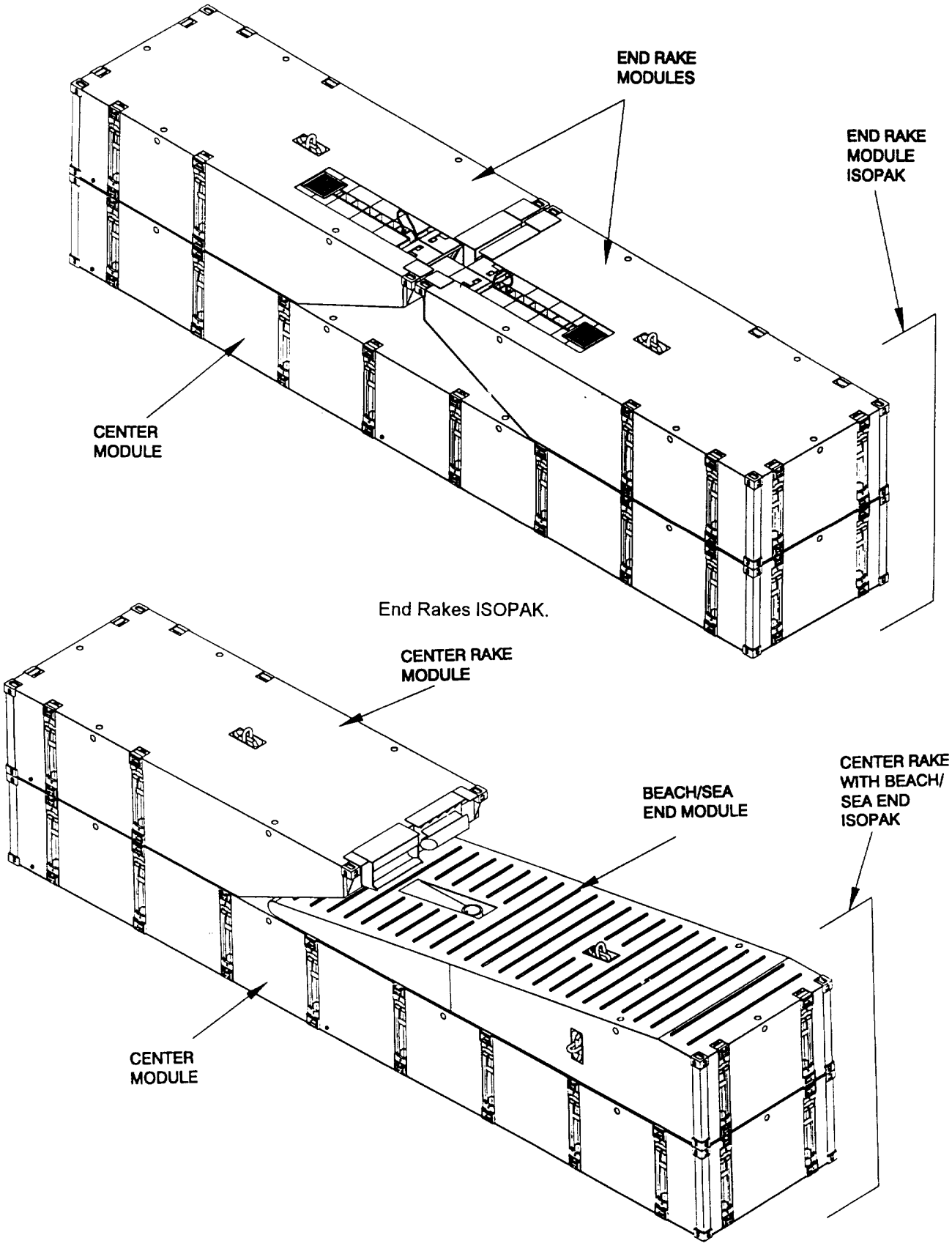

Center Rake with Beach/Sea End ISOPAK.

Figure 2-24. MCF ISOPAK.

2-6.3 Disassembling an ISOPAK. To disassemble an ISOPAK (Figure 2-25), perform the following steps.

WARNING

Wear gloves and safety shoes at all times. Severe injury may result when working with metal fittings and wire rope.

a. At this point the ISOPAK may be lifted from four corners using the Army Rough Terrain Container Handler (RTCH). Note that three ISOPAKs comprise one MCF section. Set ISOPAK on ground.
b. Unlock four ISOPAK vertical connectors, one at each corner, by moving the lever. An actuator pole may be used if operation by hand is not possible. Lift connected End Rake Modules by crane slings and remove from top of Center Module or Propulsion Module. Remove connectors from corners and dunnage.
c. Remove the two horizontal ISOPAK connectors. Separate the two nose-to-nose End Rakes and collect. Install all deck fittings and stow all connectors of both End Rakes and Center Module.
d. Inspect modules to ensure drain plugs are installed and tight in the mod ule.

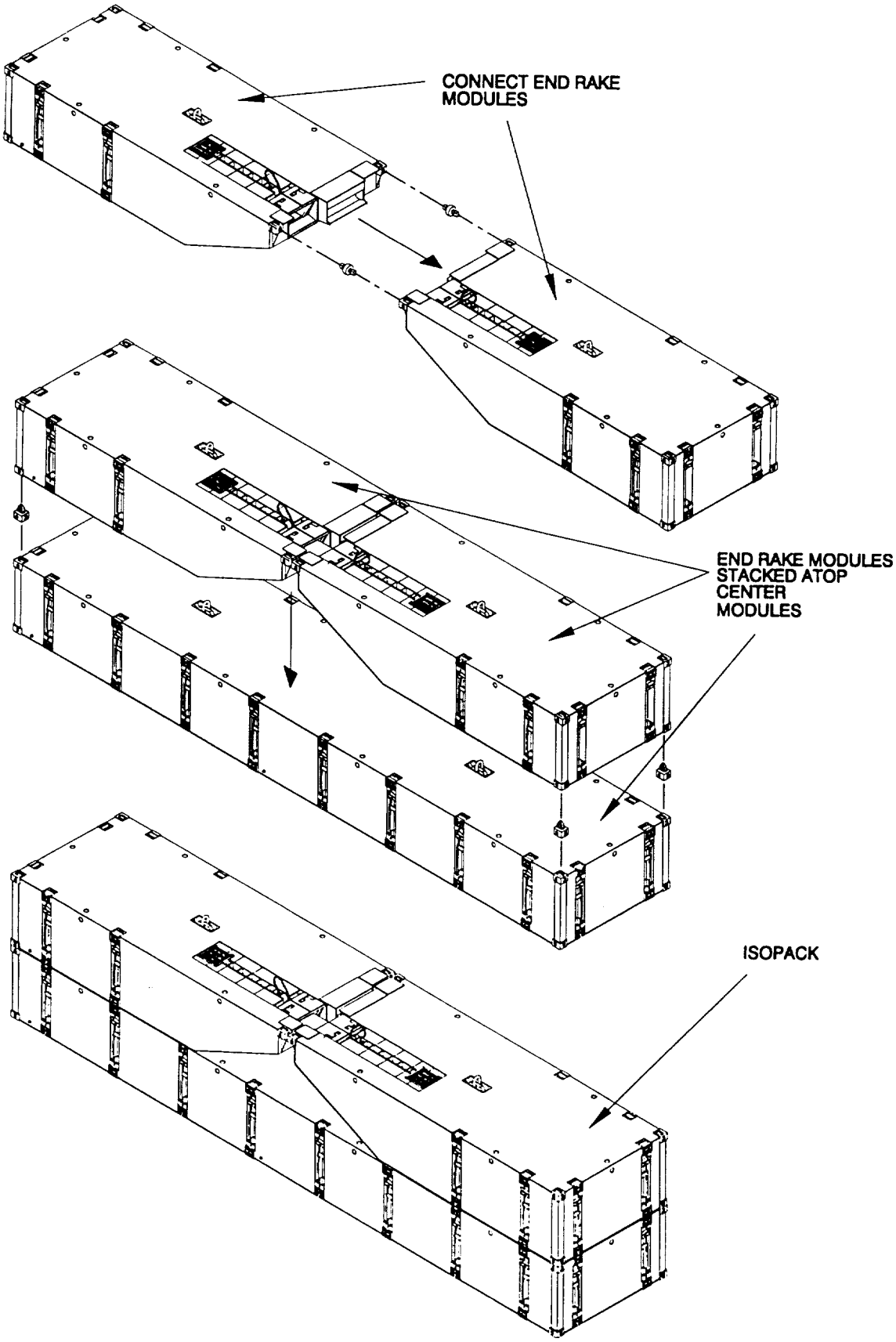

Figure 2-25. Disassembling an MCF ISOPAK.

2-6.4 Lifting End Rakes.

NOTE
Ensure modules are leveled when hoisted by slings.

a. The End Rake utilizes a three-leg bridle with a 1-1/4 inch x 4 inch x 8 inch master link. Center leg: 3/4 inch diameter 6 x 37 IWRC wire rope with thimbles both ends (Figure 2-26). The leg is 6 foot pull to pull with one 11 ton eye hook at the load end.
b. Outer legs: 3/8 inch x 14 foot Hi-Test chains with clevis grab hook on the load ends. The lift ends are attached to the master link.

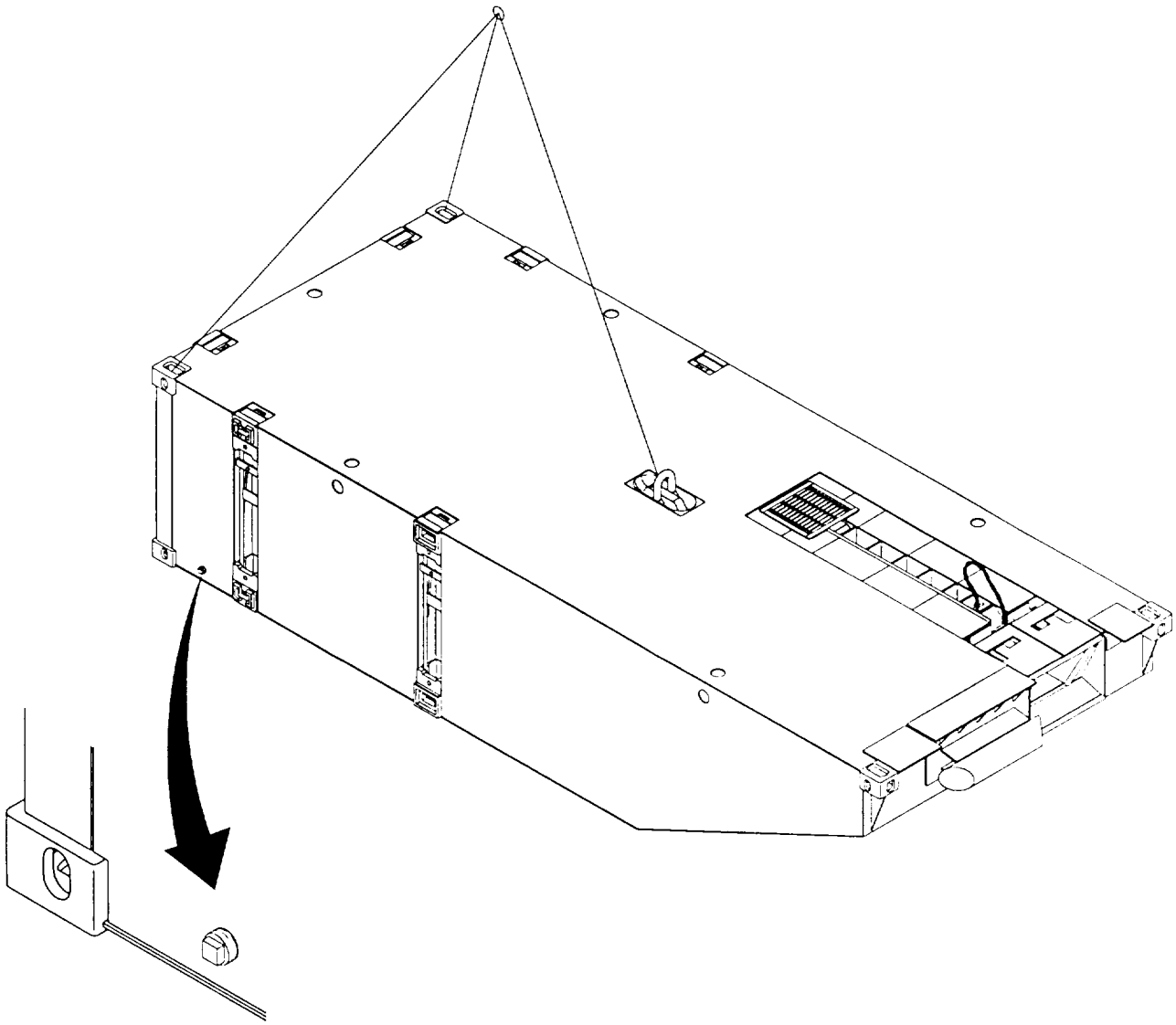

Figure 2-26. Lifting MCF End Rakes.

2-6.5 Lifting Center Modules (Non-Powered).

a. A string sling is utilized when lifting the Center Module (Non-Powered) (Figure 2-27). The string slings consists of a 1 3/8 inch diameter 6 X 37 IWRC two leg, wire rope bridle with a 2-1/4 inch x 8 x 16 inch master link at the lift end. Bridle legs are 14 feet pull to pull, with thimbles at each end. One 22 ton eye hook is at the load end of each leg.

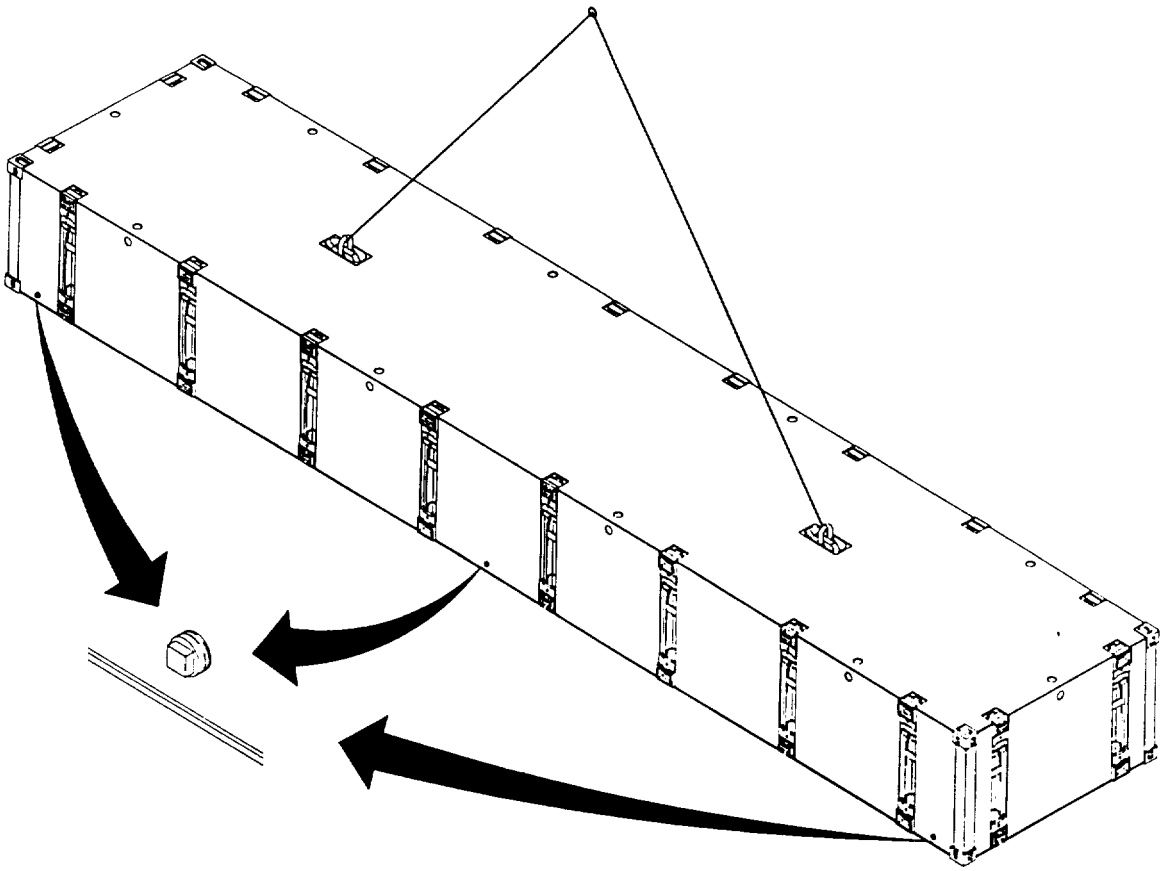

Figure 2-27. Lifting MCF Center Module (Non-Powered).

2-7 NON-POWERED MODULE/NON-POWERED SECTION ASSEMBLY AND PREPARATION FOR USE. This section describes the assembly of the center modules/sections (non-powered) and the beach/sea end sections of the MCF assembly involving the assembly of the connector assemblies and the connecting of modules together.
Using Table 2-21, unpack and inventory section equipment prior to installation.

NOTE

DO NOT throw away or destroy any packing crates as they will be needed for storage when the MCF is disassembled for stowage and transport.

2-7.1 Connector Assembly. The connector assembly (Figure 2-28) is comprised of both Female and Male connector assemblies. At each connector location, there are upper and lower engagement points. Both engagement points are actuated simultaneously by simply sliding the guillotine bar vertically from the deck. The pairs of vertical connectors are spaced evenly around the perimeter of each module allowing for universal module configuration.

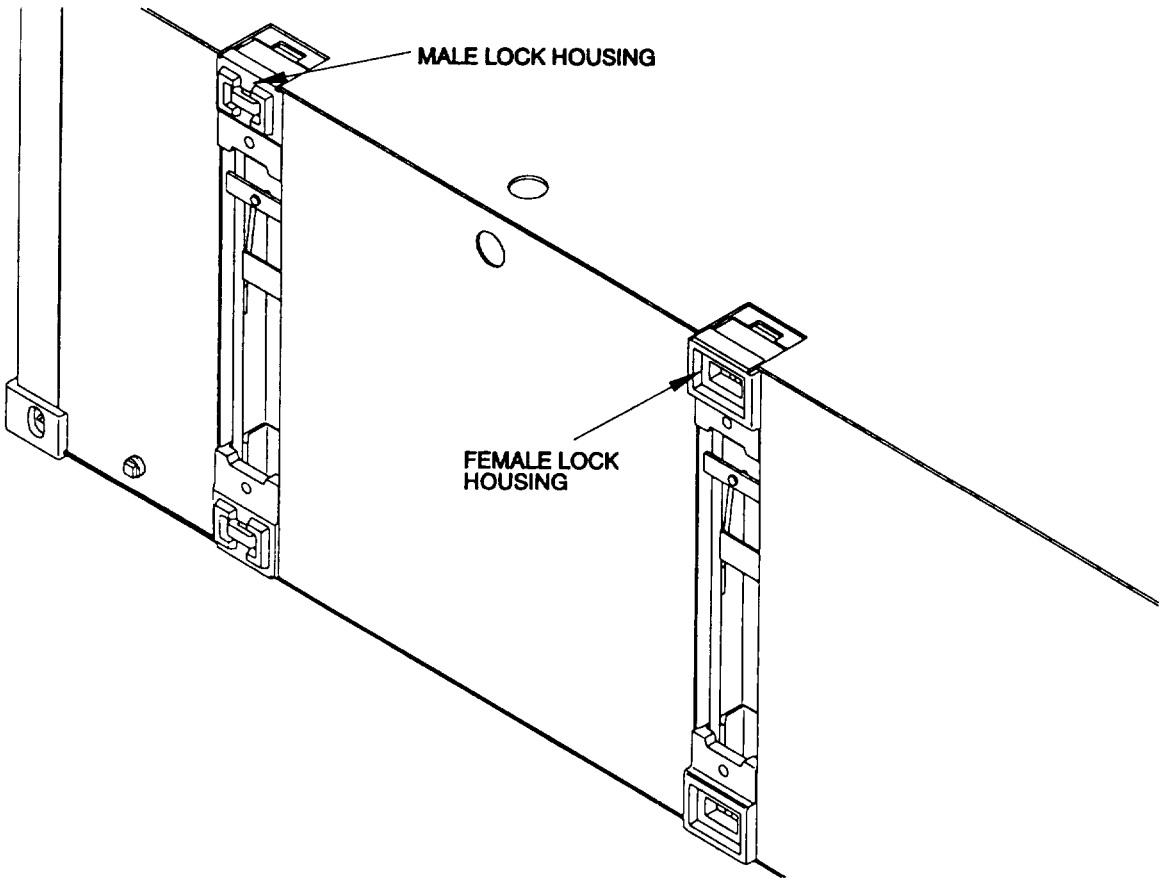

Figure 2-28. MCF Connectors in Pairs.

2-7.2 Male Connector Assembly. The Male Connector Assembly (Figure 2-29) is made of a retractable connector pin designed to be flush with the surface in the stowed position. The male connector assembly consists of the following components.

a. Connector Pin
b. Deployment Spring
c. Guillotine Bar
d. Friction Plate

Figure 2-29 shows the male connector pin in the stowed position, notice the two protruding tapered shear lugs around the pin housing. In the retracted position, the pin is compressed against the deployment spring and is held in place by the guillotine bar.

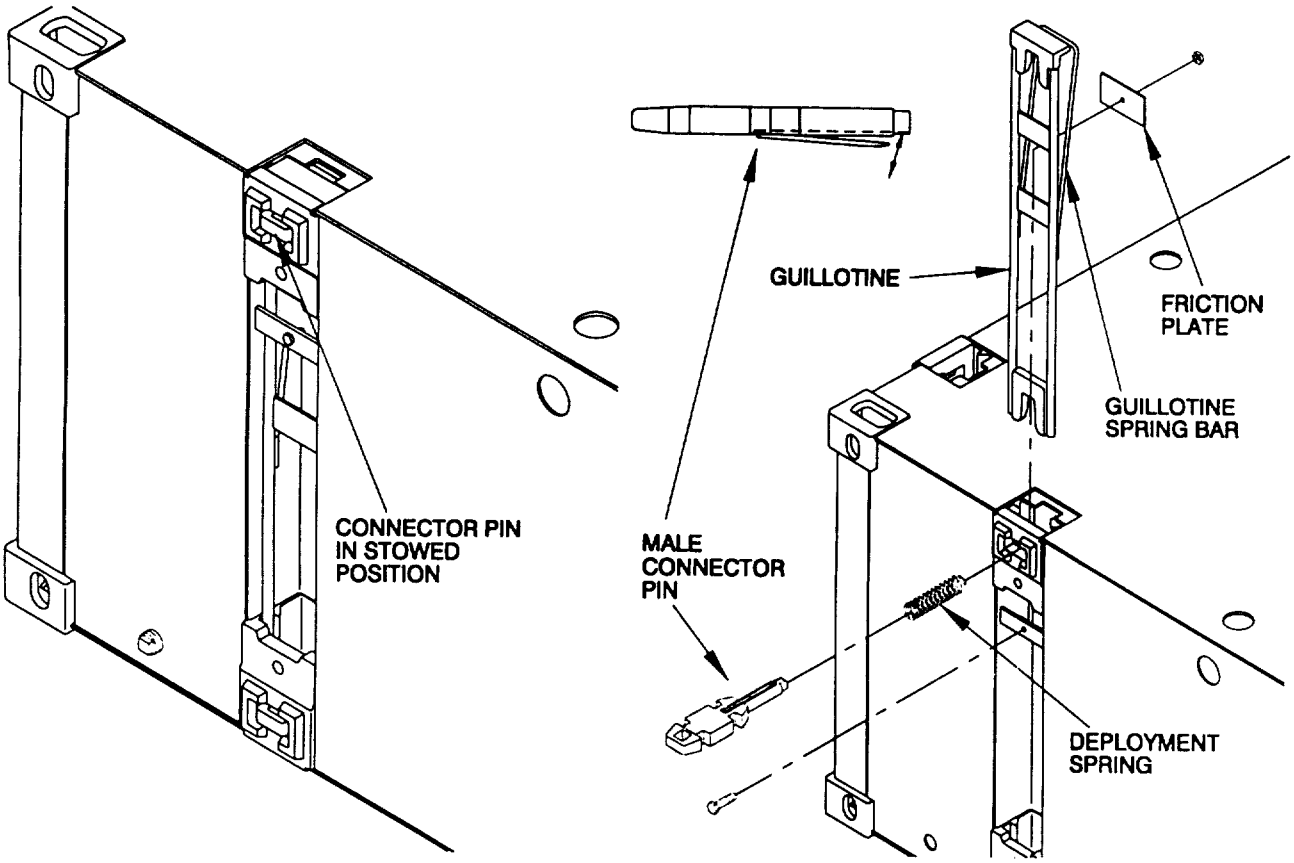

Figure 2-29. Male Connector Assembly (Connector Pin in Stowed Position).

2-7.3 Female Connector Assembly. The Female Connector Assembly (Figure 2-30) receives the Male Connector Pin, and when locked, forms a positive mechanical interlock. It also opens the connection by raising the female connector pin. The female lock assembly is made of the following components:

a. Guillotine Bar
b. Friction Plate

The Female Connector Assembly can be identified by the projecting shear lug which completely surrounds the housing. The Female Connector Shear Lug is internally tapered and sized to fit tightly with the mating lugs on the opposing male connector. This arrangement enhances the strength of the connectors enabling it to withstand heavy shear loads.

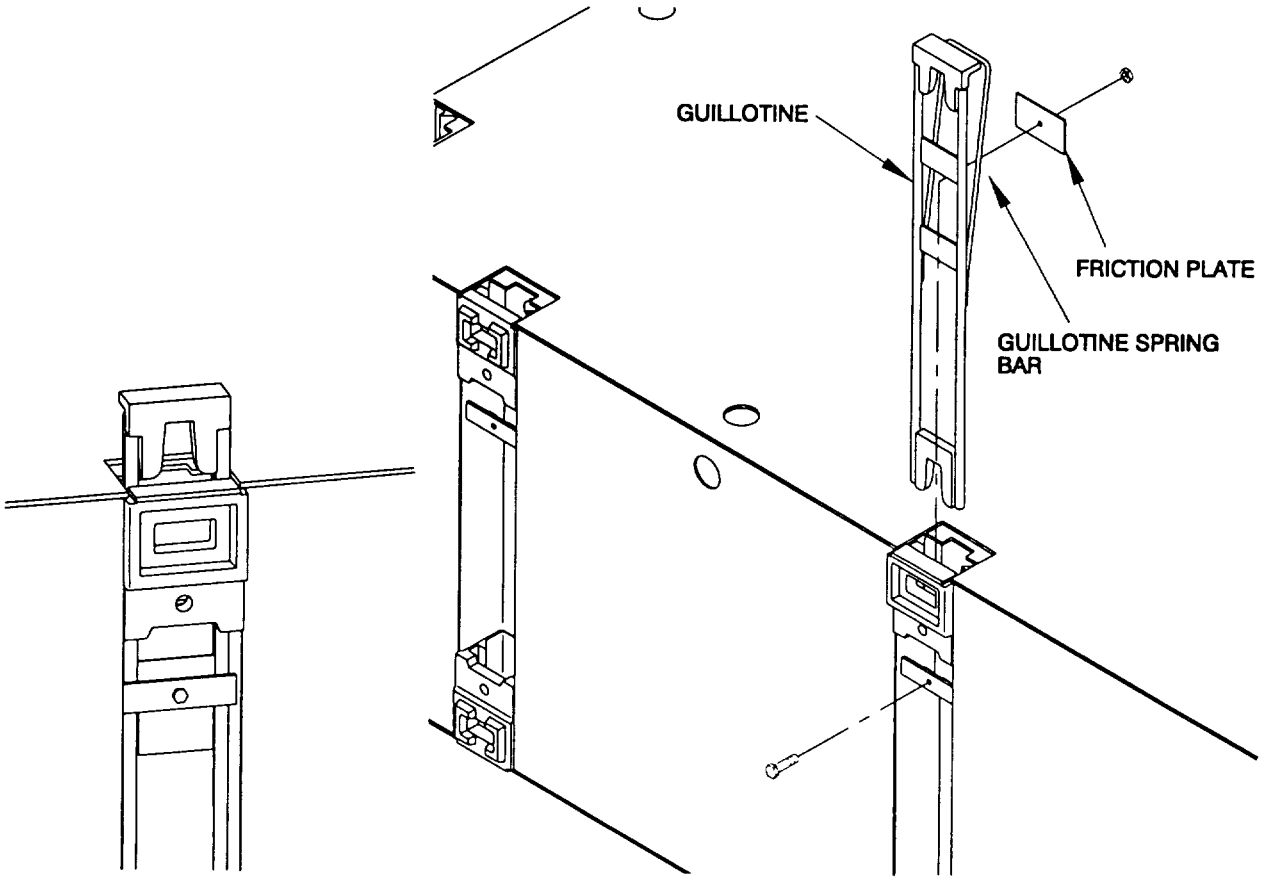

Figure 2-30. Female Connector Assembly.

2-7.4 P-3 Adapter Assembly Connection Assembly. The P-3 Adapter Assembly (Figure 2-31) is positioned between the center module (non-powered) and the beach/sea end module. This allows the beach/sea end to be installed in the inverted position (optional configuration). When in the inverted position, guillotine bars are inserted into the opposite connector positions. The male and female connectors are positioned in accordance with Figure 2-32. The male and female connections are made in accordance with Paragraphs 2-7.2 and 2-7.3.

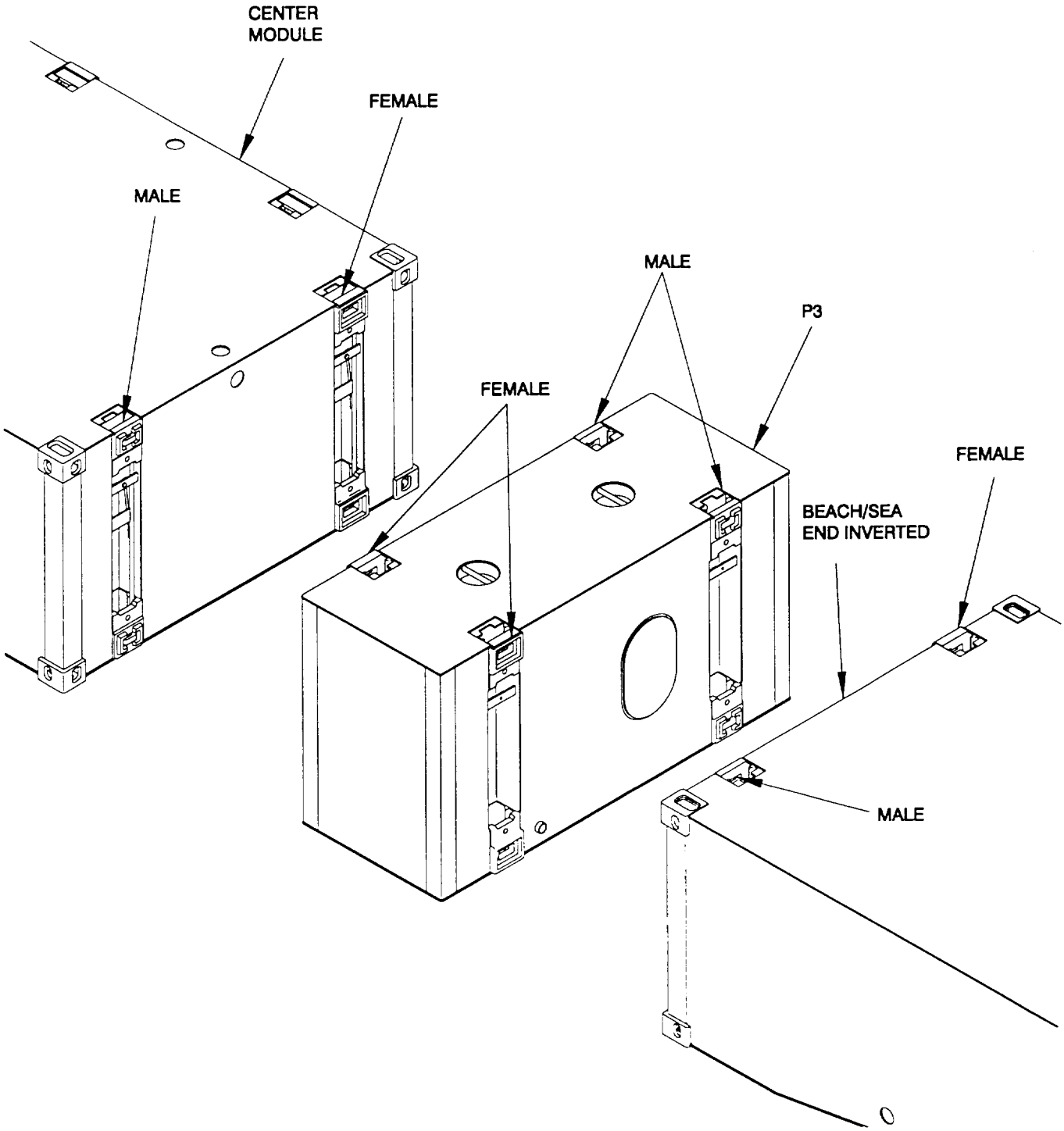

Figure 2-31. P-3 Adapter Assembly Connector Assembly.

2-7.5 MCF Section and String Assembly.

WARNING

All safety precautions listed in front of this manual shall be followed at all times to prevent serious injury to personnel.

WARNING

Modular Causeway Sections (Powered and Non-Powered) shall be assembled on the deck of the mother ship or in water at sea state "O". Attempting to assemble causeways in higher sea conditions could cause injury or possibly death to personnel and/or damage the equipment.

a. The following tools are required for connector assembly operation:
   1) 10 lb Sledge Hammer
   2) 60 Inch Pry-bar

b. To prepare the Male Connector Assembly for connection, complete the following:

CAUTION

Wear hard hat, safety shoes and gloves to protect fingers whenever preparing modules for connection. Extra precaution must be taken with sledge hammer operations.

c. Insert the pry-bar behind the Spring Bar under the Male Guillotine Bar (Figure 2-32).

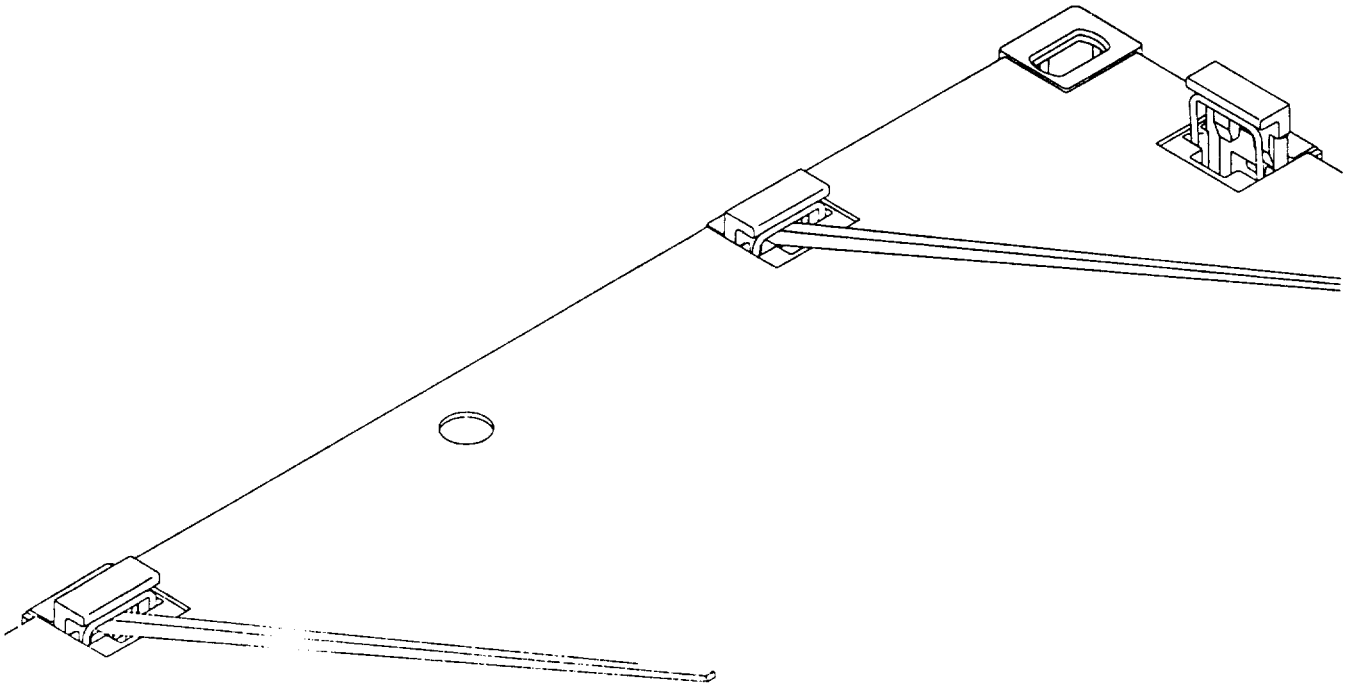

Figure 2-32. Pry-Bar Operation and Rotation.

d. Rotate pry-bar downward to clear Spring Bar from deck overhangs and allow the Male Guillotine Bars to move upward (Figures 2-33, 2-34 and 2-35).

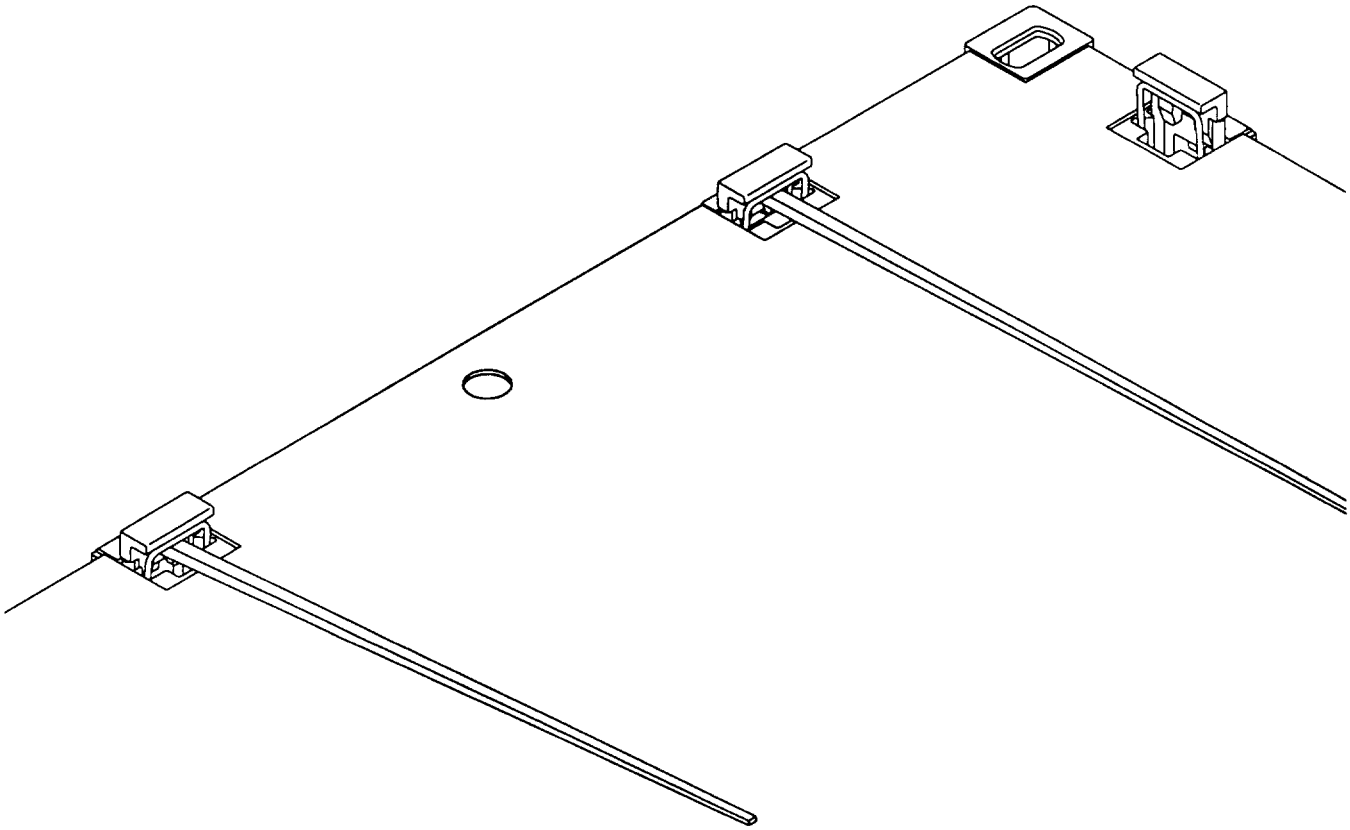

Figure 2-33. Raising Guillotine Bar Upward.

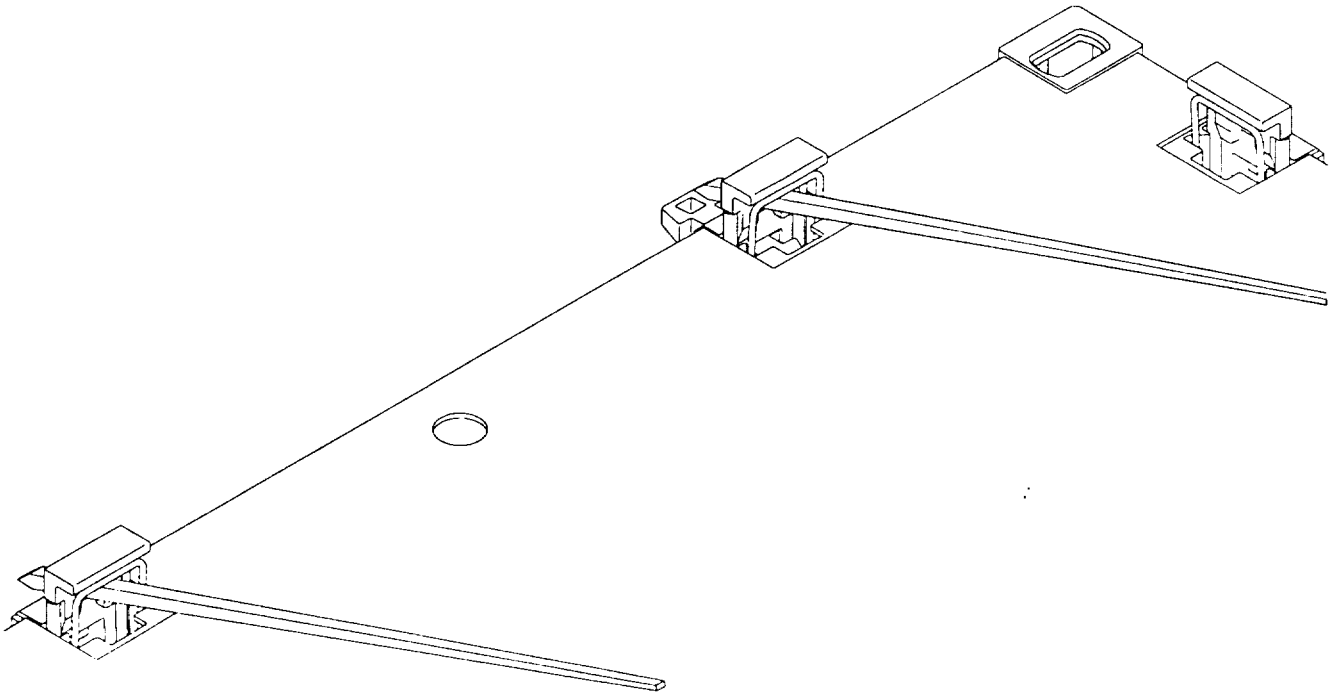

Figure 2-34. Guillotine Bar in the Fully Elevated Position.

e. Raise the Male Guillotine Bar approximately 6 inches until it stops. It should stay in the up position, if not, tighten bolt in Friction Plate for more tension. This will allow the Pin Deployment Spring to push the Male Guillotine Pins to the fully extended position (Figure 2-35). Remove the pry-bar.

NOTE

Personnel should hear two clicks as both pins extend, or if the module is in the water, personnel should see the first pin extend and continue to pull up until one can hear or feel the second lower pin extend.

f. Drive the Male Guillotine Bar down using a sledge hammer, if required, to secure the Male Connector Pins in the fully extended position.

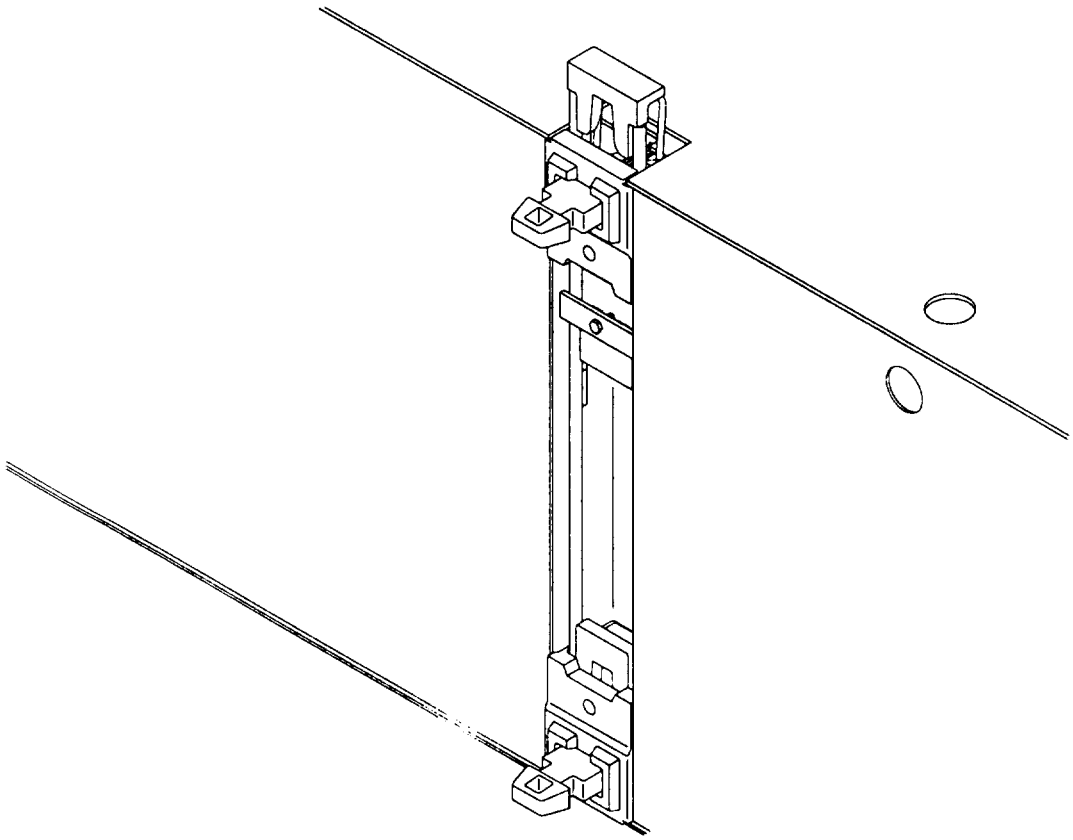

Figure 2-35. Male Connector Pins in the Extended Position.

g. To prepare the Female Connector Assembly for connection, utilize the preceding steps for the Male Connector Assembly as follows:
   1) Insert the pry-bar behind the Spring Bar under the Female Guillotine Bar (Figure 2-32).
   2) Rotate pry-bar downward to clear Spring Bar from deck overhangs and allow the Female Guillotine Bar to move upward (Figures 2-32, 2-33 and 2-34).
   3) Raise the Female Guillotine Bar approximately 6 inches (Figure 2-33).
   4) Remove the pry-bar, leaving the Female Guillotine Bar in the fully elevated position. It should stay in the up position. If not, tighten bolt in Friction Plate for more tension.

h. The Female Connector Assembly is now ready to receive the Male Connector Pin for engagement of the two assemblies.

2-7.6 Deck Fittings, Fenders, and Rhino Horn Installation.

a. Install D-Rings and Cleats on the outboard sides of each intermediate section and beach/sea end section (Figure 2-36).
b. Fenders (per section) have cable loops and are hung on the cleats, both on outboard sides of each center and beach/sea end section.
c. A rhino horn, as necessary, is installed in the beach/sea end section.

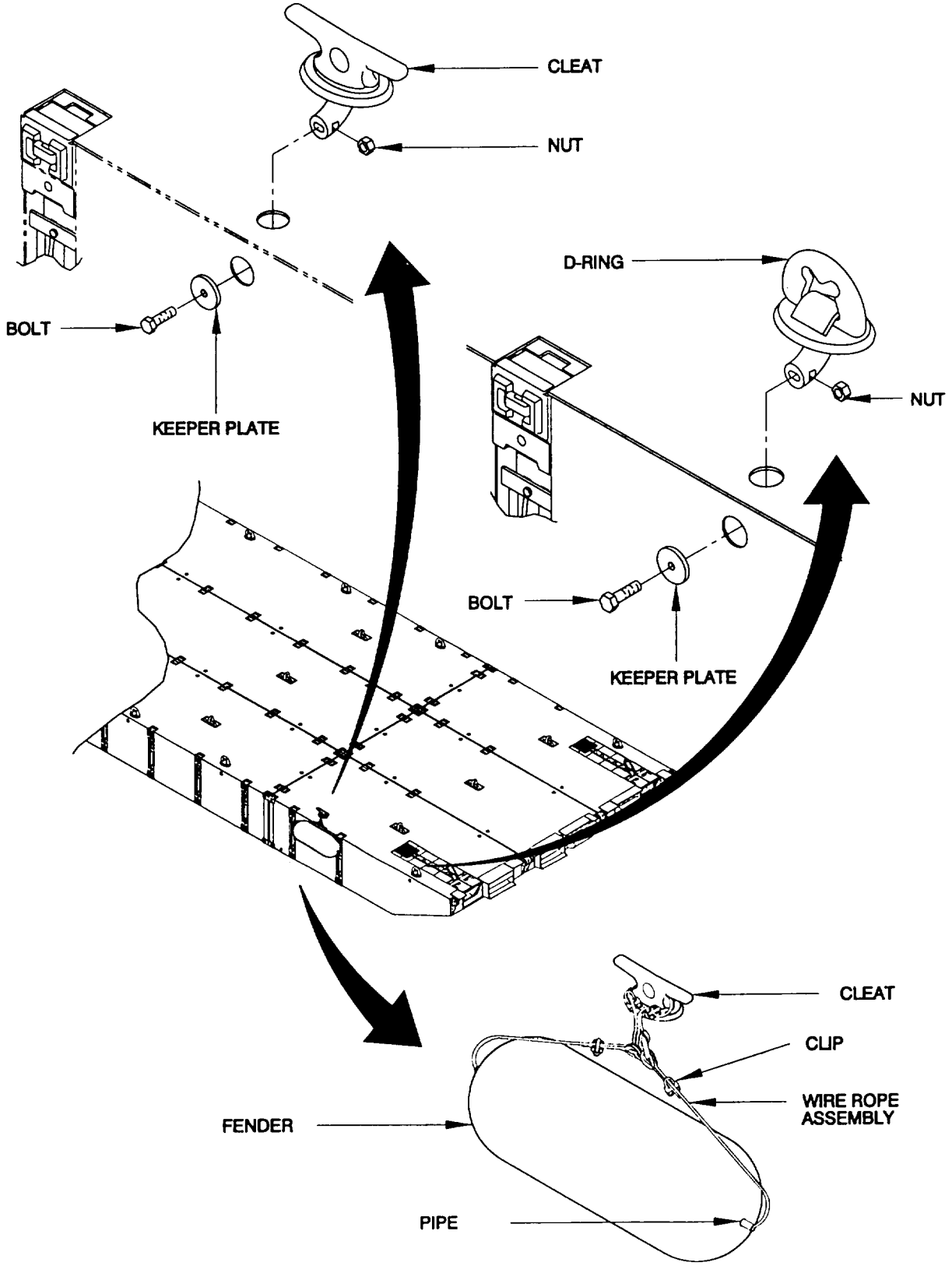

Figure 2-36. Deck Fittings, Fenders, and Rhino Horn Installation (Sheet 1 of 2).

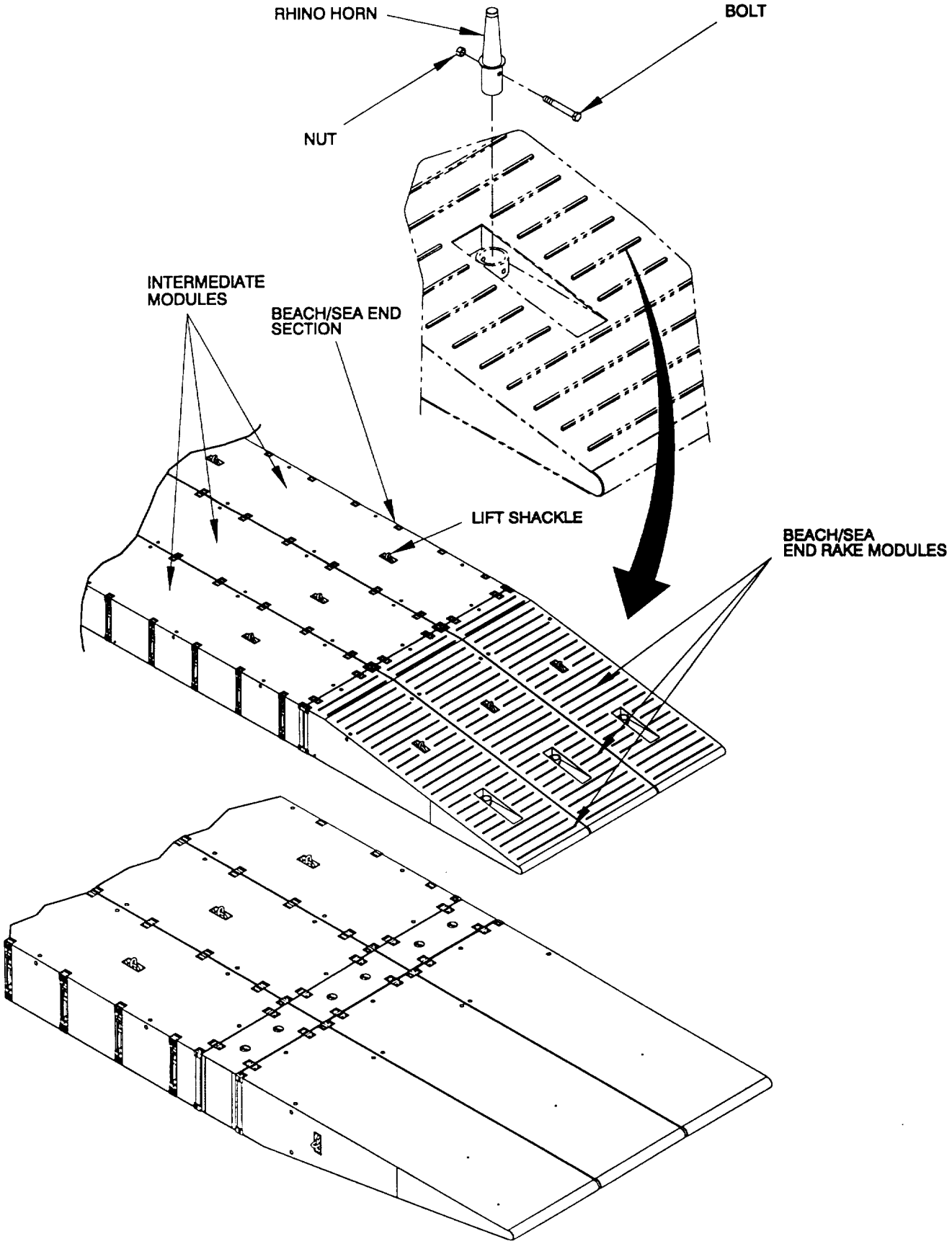

Figure 2-36. Deck Fittings, Fenders, and Rhino Horn Installation (Sheet 2 of 2).

2-7.7 Module System Assembly. As discussed earlier, MCF modules are interconnected into a system of strings and sections by engagement of male and female connector assemblies.

CAUTION

Do not handle ropes/lines by placing hands inside the bight of the line where it feeds into cleats, etc. Place the hands on top or on the outside so that in an emergency the lines can be released quickly to preclude being pulled into the equipment.

a. Pull MCF strings together using ropes/lines, flush turn tubes, and deck cleats so that the tapered surfaces of male and female connectors mate together in general alignment (Figure 2-37).

NOTE

A String consists of a assembly of three modules connected together end to end. Listed below is the various combinations of Strings.

1) LH and RH End Rakes Module (1 each), Propulsion Module (1 each)
2) LH and RH End Rakes Module (1 each), Center Module (1 each)
3) LH or RH End Rake Module (1 each), Center Module (1 each), Beach/Sea End Module (1 each)
4) Center End Rake Module (2 each), Center Module (1 each)
5) Center End Rake Module (1 each) Center Module (1 each) Beach/Sea End Module (1 each)

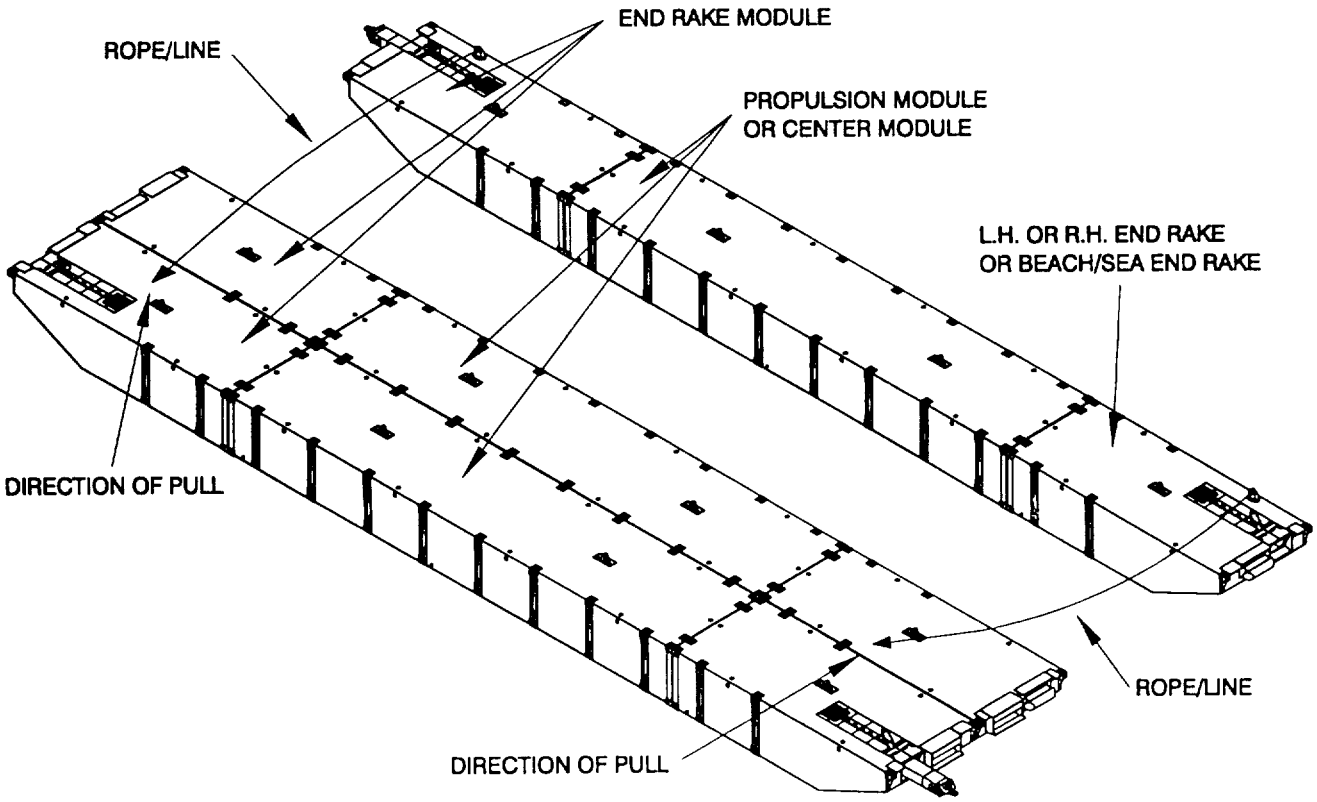

Figure 2-37. Pulling MCF String.

b. As the Male Connector Pins enter the Female Housing, use a sledge hammer to drive the Female Guillotine Bar downward into engagement with the extended connector pins (Figure 2-38).

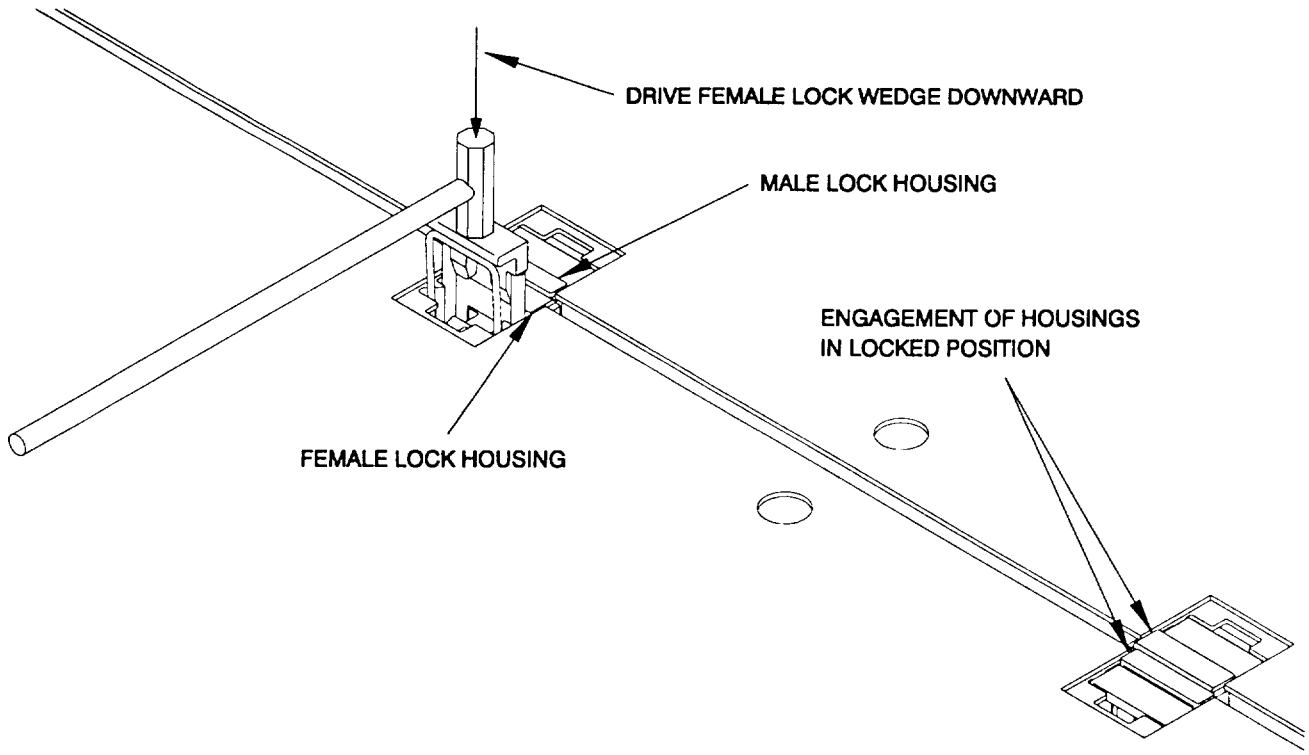

Figure 2-38. MCF String Engagement.

c. At engagement, the Female Guillotine Lock Bar snaps under the overhanging projections of the Female Connector Housing, thereby preventing unintentional release of the lock.

NOTE

Ensure strings are completely aligned before locking the connectors. Utilize fenders when bringing strings along side.

d. Step-by-step procedure for connecting MCF lock assemblies (Figure 2-39).
   1) With the male connector assembly, connector pin in the extended and locked in position.
   2) Draw together the male and female connectors until they are interfaced.
   3) Depress the female guillotine bar with sledge hammer engaging the lock bar there-by locking the assemblies together.

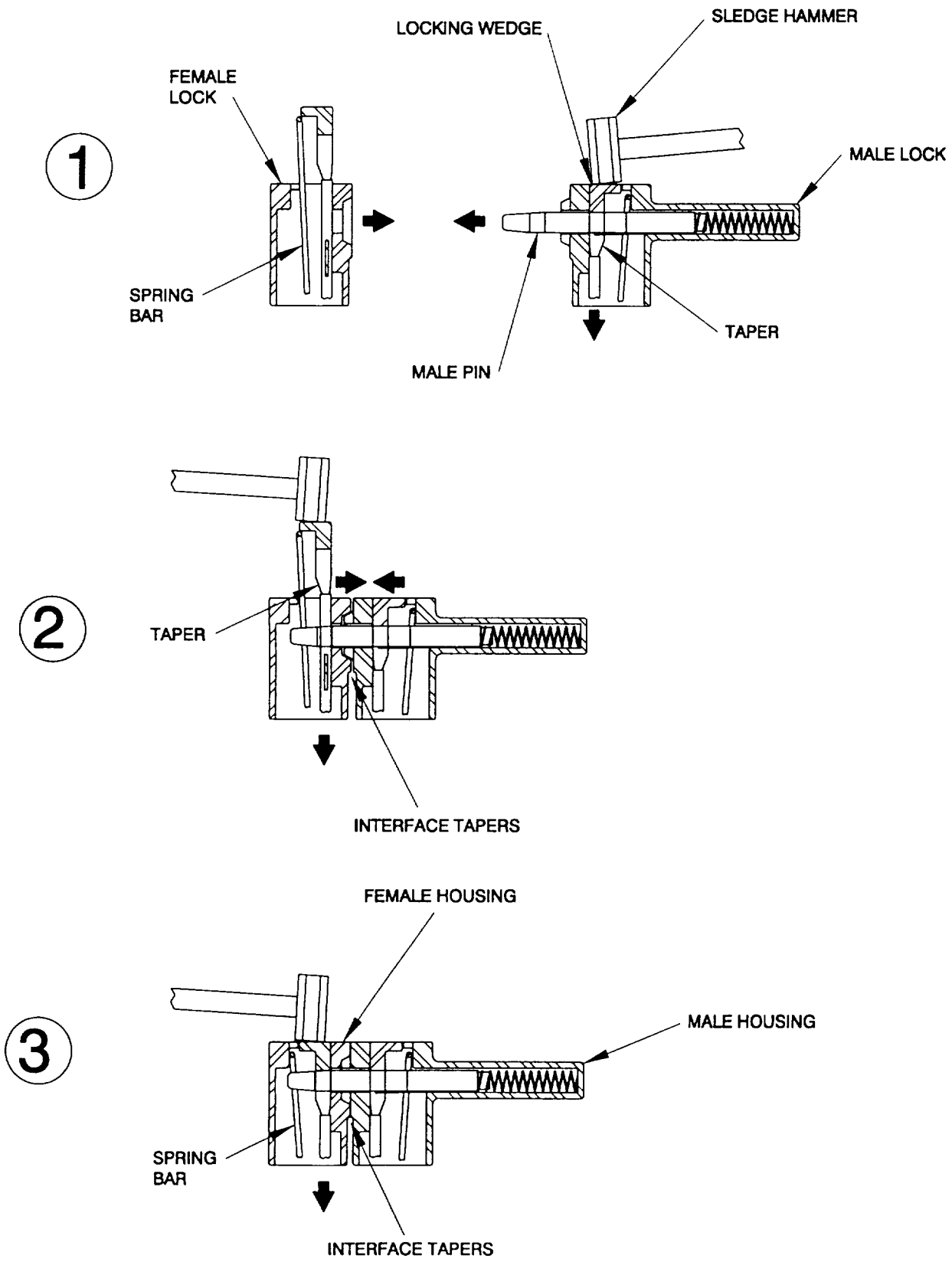

Figure 2-39. Interconnection Steps.

2-7.8 Flexor Connector Installation. Before installing flexor connectors, visually inspect them. They must not be twisted, broken or cracked. Any connectors in unsatisfactory condition should be replaced with connectors in acceptable condition.

The flexor connector is installed into the end rakes of the sections in accordance with Figure 2-40.

WARNING

The flexor connector weighs approximately 1400 pounds. Failure to use proper lifting and hoisting equipment could cause severe injury or death to personnel.

a. Lift and position the flexor connector into the slot provided on the end of the section port or starboard end rake.
b. Push the flexor connector into the slot until the guillotine plate can be slid down into the flexor connector slots.

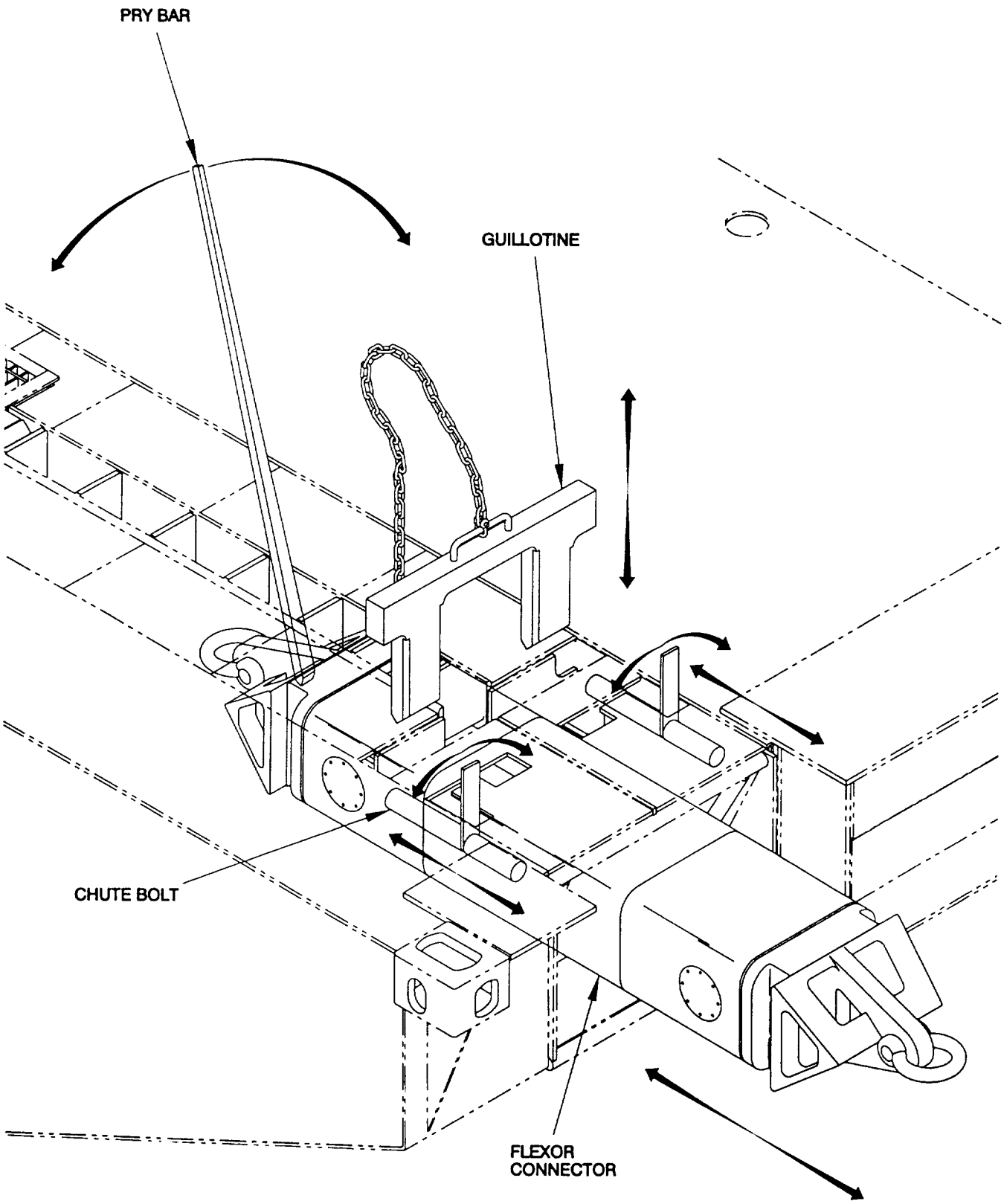

Figure 2-40. Flexor Connector Installation.

2-7.9 Assembly Summation. When three non-powered modules with end rakes strings are connected together, the result is the Intermediate Section (Figure 2-41). When three non-powered modules, with end rakes on one end and beach/sea ends on the other end are connected, the result is the Combination Beach/Sea End Section (Figure 2-42). When the Beach/Sea End Section has the P-3 Adapter Assembly installed, this results in the alternate configuration, with the beach/sea end modules inverted (Figure 2-43).

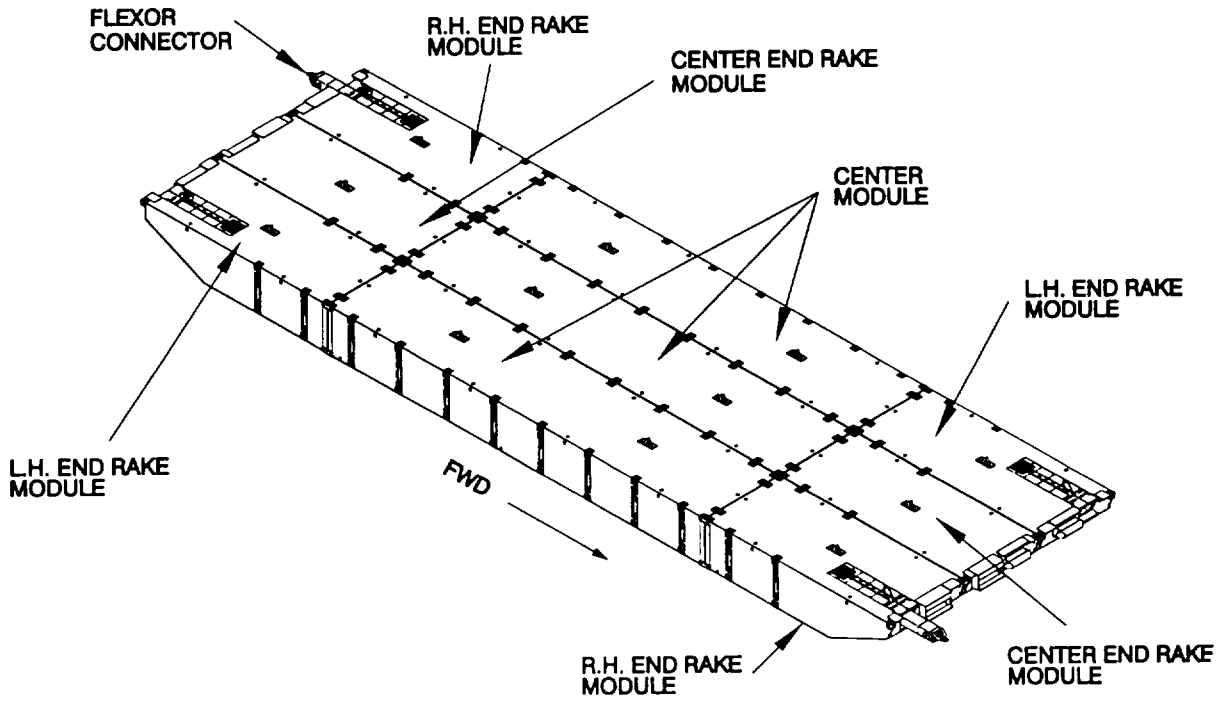

Figure 2-41. Assembled Intermediate Section.

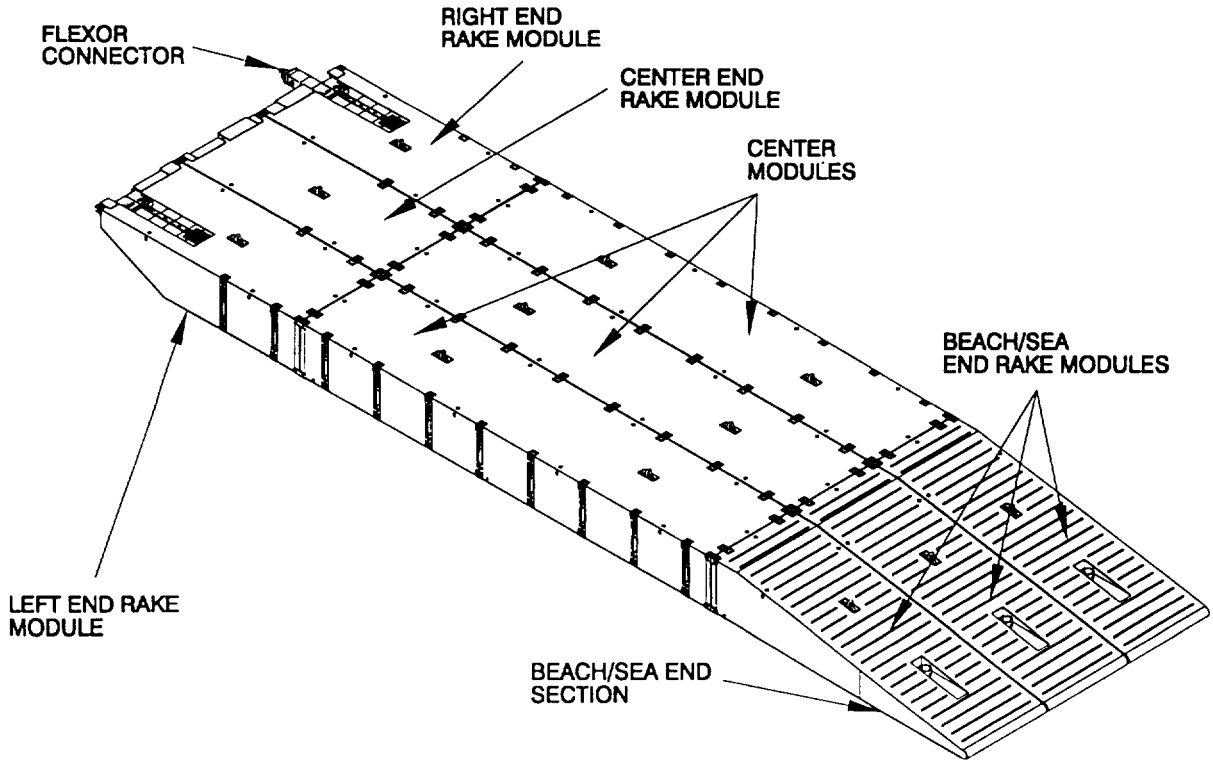

Figure 2-42. Assembled Beach/Sea End Section.

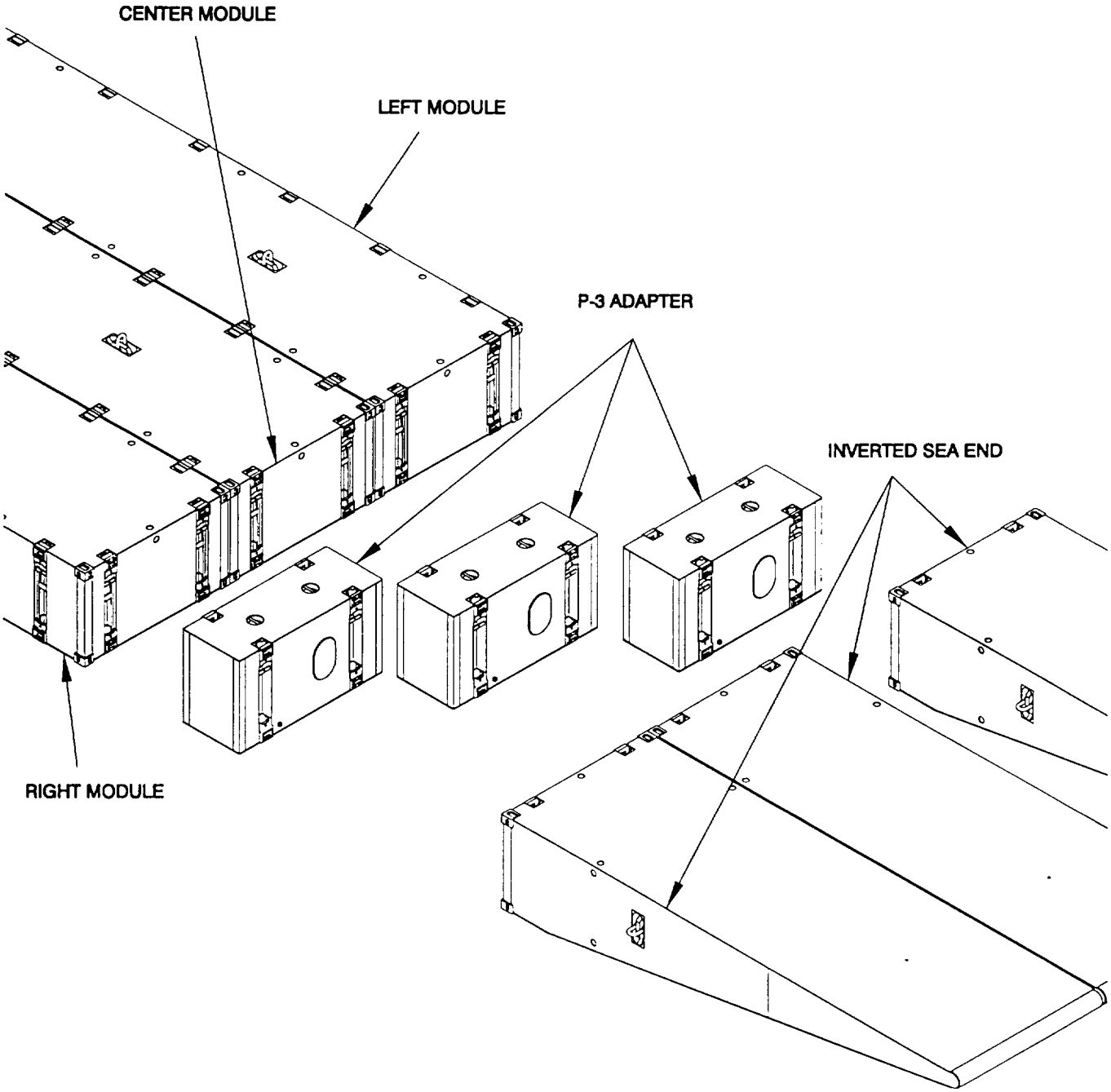

Figure 2-43. Assembled Alternate Beach/Sea End Section with P-3 Adapter.

2-7.10 Lifting the MCF Section. Use the following procedures if the MCF was disassembled and stowed in section configurations.

a. The MCF lifting sling consists of a spreader beam (Figure 2-44) with a 2-1/2 inch safety anchor shackle in the top center lifting eye along with 1-3/4 inch diameter 6 x 37 IWRC two-leg and wire rope bridles with 2-1/4 inch x 8 inch x 16 inch master links attached to bottom-lift eyes of the spreader beam using 1-3/4 inch safety anchor shackles. Bridle IWRC legs are 22 feet pull to pull with thimbles on each end. One 1-3/4 inch screw pin anchor shackle is attached to the lift end of each bridle leg.

b. Lift section and place in water.

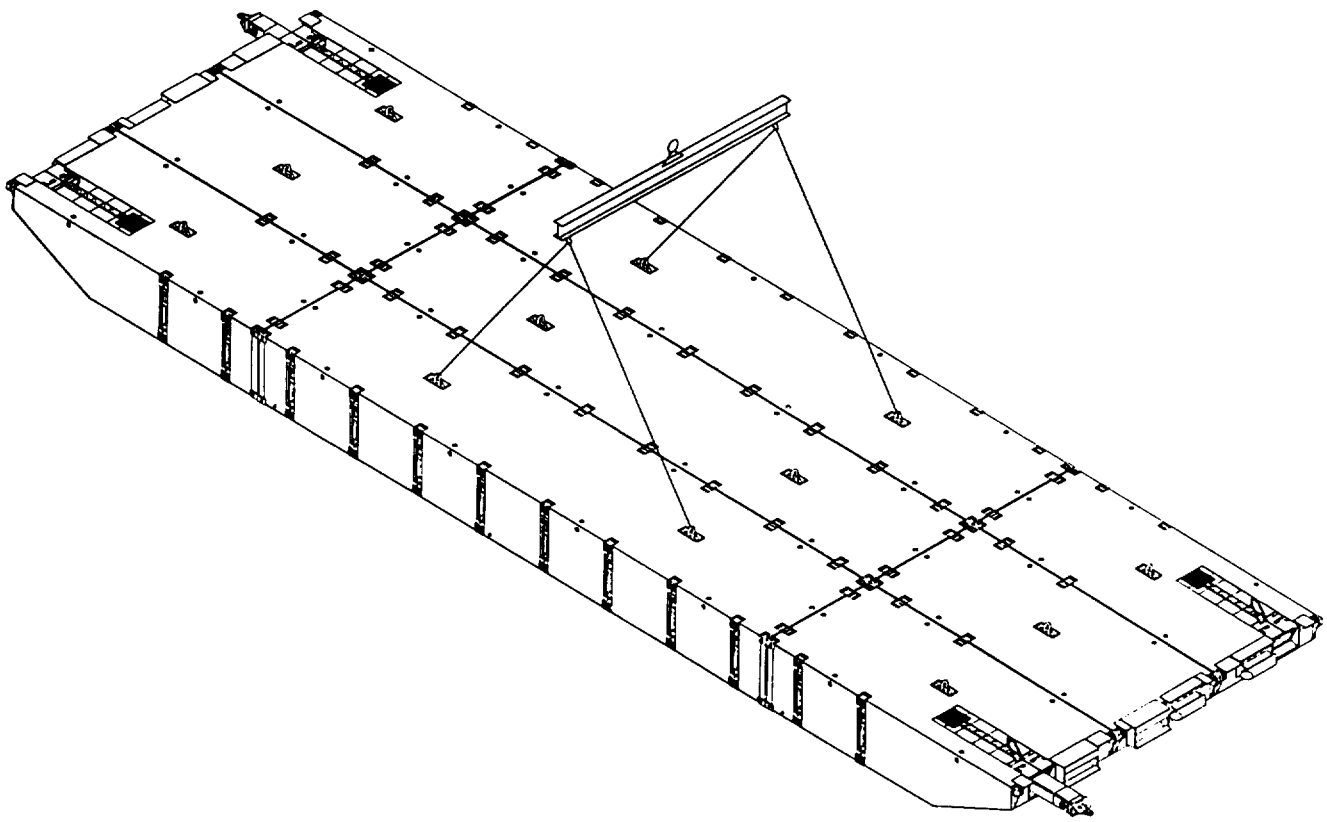

Figure 2-44. Lifting the MCF Section.

2-7.11 MCF Disengagement and Connector Stowage. MCF modules are easily and rapidly disconnected by performing the following steps:

WARNING

Use extreme caution when hands and feet are in contact with connector parts.

a. Raise the guillotine bar of the female connector assemblies (as described in preparations for MCF assembly). This action will release the connector pins, allowing the modules to separate.

NOTE

Steps b through e can be accomplished out of water.

b. Depress the lower connector pin against its deployment spring into the lower male housing with foot.
c. Hold lower connector pin fully inward while lowering the guillotine bar slightly with sledge hammer, if required, to engage and restrain the lower pin without coming in physical contact with any other connector parts.
d. Depress the upper connector pin against its deployment spring into the upper male housing with hand (Figure 2-45).
e. Hold upper connector pin fully inward while lowering the guillotine bar completely down with sledge hammer, if required, to restrain the connector pins in the stowed position.
f. Return the female connector assembly guillotine bars to their stowed positions with sledge hammer, if required, until completely flush with the deck.

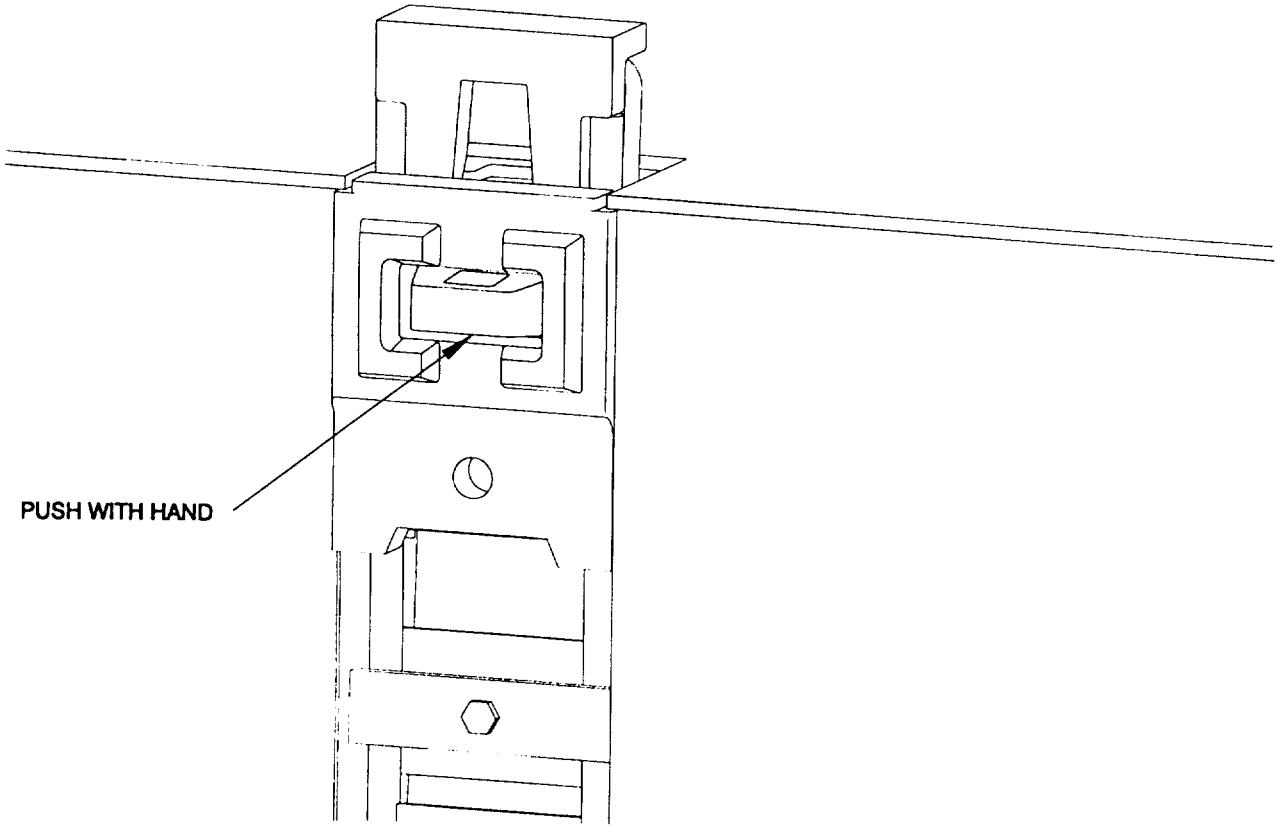

Figure 2-45. Stowing Male Connector Pins.

2-7.12 MCF - NL Interoperability. MCF End Rakes are equipped with U.S. Navy causeway flexor interface. Right, Center and Left-Hand End Rakes correspond to NL series P8M, P8C and P8F pontoons, respectively.

WARNING

U.S. Navy Flexor Connectors weigh approximately 1400 pounds each. Use appropriate hoisting equipment and follow all standard MCF safety procedures to prevent damage to equipment or possible injury to personnel.

a. Attach flexors to the NL Causeway and prepare the MCF interface to receive flexors. A crane maybe used to align the MCF and the NL Causeway.

WARNING

No part of a person's body should be allowed to come between MCF and NL causeways. Severe injury and unit damage may occur in rough water conditions.

b. Figure 2-46 shows a MCF module connected to a NL causeway. Connecting may be done by lifting into position with a crane.

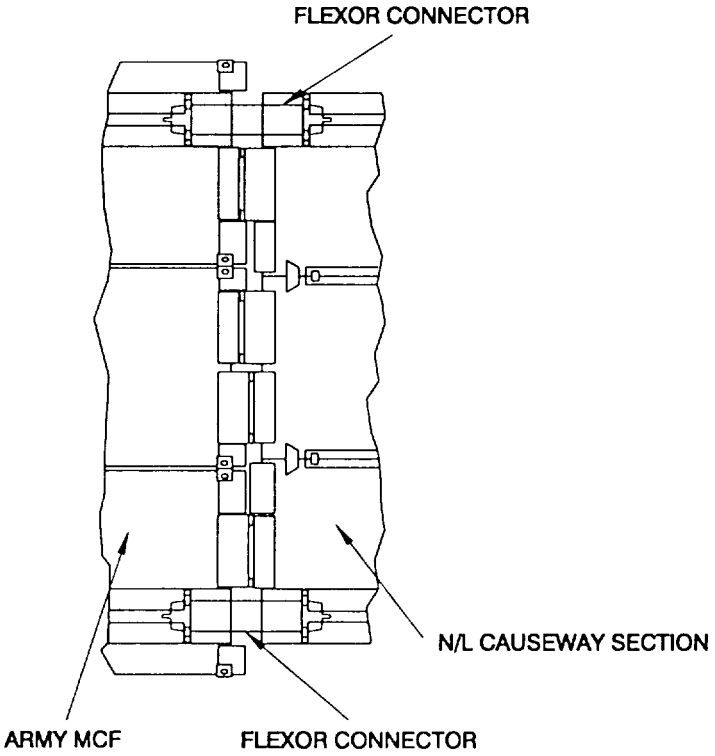

Figure 2-46. MCF-NL Compatibility.

2-8 PROPULSION MODULE/POWERED SECTION ASSEMBLY PREPARATION FOR USE

2-8.1 General Assembly Instructions.

WARNING

All safety precautions outlined in the front of this manual shall be followed at all times to prevent serious injury to personnel.

WARNING

Modular Causeway Sections (Powered and Non-Powered) shall be assembled on the deck of the mother ship or in water at sea state "0". Attempting to assemble causeways in higher sea conditions could cause injury or possibly death to personnel and/or damage the equipment.

CAUTION

The MCF will be used to transport containers, rolling and breakbulk cargo from ocean-going vessels in the stream to the beach during logistics operations in areas of the world where military force projections are envisioned to be conducted. The MCF will operate over unimproved beaches where fixed port facilities are denied, unavailable, or are otherwise inadequate and where beach gradients preclude the use of other medium to deep displacement vessels. The MCF will perform its mission in sea conditions ranging from sea states 0 up to and including sea states 2 and in surf conditions up to 5 feet.

CAUTION

Ensure propulsion module hatches are secured before assembling the powered section in the water to prevent water from entering the below deck compartments.

NOTE

Reference Paragraph 2-7 for typical connector assembly and module connection procedures.

a. Using Table 2-21, unpack and inventory powered section equipment prior to installation.

NOTE

DO NOT throw away or destroy any packing crates as they will be needed for storage when the MCF is disassembled for stowage and transport.

b. Assemble end modules to propulsion modules and center module to create powered section strings. This can be performed on land or in calm water. Pull the strings together to form the powered section without above deck assemblies (Figure 2-47). Pay particular attention to the Notes below.

NOTE

The port and starboard propulsion modules are distinguished by the direction the exhaust port faces; i.e., the starboard propulsion module's exhaust port faces out to the starboard side and port propulsion module's exhaust port faces out to the port side.

NOTE

The powered section has three distinct strings consisting of the assembly of three modules connected together end to end. Listed below are the combinations of each string.

1) LH and RH End Rakes Module (1 each), Port Propulsion Module (1 each)

2) LH and RH End Rakes Module (1 each), Center Module (1 each)

3) LH and RH End Rake Module (1 each), Starboard Propulsion Module (1 each)

c. Reference Paragraph 2-7.7 and install deck fittings and fenders: ten D-Rings, four Cleats, and four fenders, on the outboard sides of the powered section.

2-8.2 Detailed Propulsion Module Assembly Instructions.

WARNING

The engine hatch weighs approximately 700 pounds. This includes the shipping hatch plate that weighs approximately 250 pounds. Use proper hoisting and lifting equipment to prevent possible injuries to personnel or damage to equipment.

a. Engine hatches (Figure 2-47, View A) contain a shipping plate that will have to be removed in order to install the operator's cab and intake plenum. Retain and protect gasket and hardware. Stow shipping plates.

WARNING

The complete operator's cab weighs approximately 3000 pounds. Use proper hoisting and lifting equipment to prevent possible injuries to personnel or damage to equipment.

b. Install guide pins and use them to locate and install the operator's cab. The operator's cab is mounted on the engine hatch. Secure the operator's cab with the same fasteners used to secure the shipping plates. Retrieve guide pins. Connect heating system quick disconnect water hoses (Figure 2-47, View B). Connect the wire rope to the fire suppression trip mechanism (Figure 2-47, View C) to hold the air intake flapper door open.

CAUTION

The cables connecting the propulsion modules to the operator's cab are identical for both the starboard and port sides. When connecting the electrical cables, insure that the starboard cables are plugged into the starboard cable receptacle of the operator's cab and that the port cables are plugged into the port side receptacle of the operator's cab.

c. Remove the front and side access panels from the operator's cab (Figure 2-47, View D) and the intake plenum. Store the front panels separately. Side access panels removal assist in connection facilitation.

NOTE

All power and data electrical connections from below deck to the operator's cab are uniquely constructed to prevent making wrong connections.

d. From below deck, bring the one power and three data cables up through the bottom of the operator's cab intake plenum area. Connect the power cable P1 from Propulsion Module Main Circuit Breaker (A6) and data cables P2, P3 and P4 from Propulsion Module Junction Box (A3) into the corresponding receptacle (Figures 2-47, view D and 2-48). If the operator's cab is mounted on the starboard side of the powered section, then the cables from the starboard propulsion module would be connected into the Starboard Receptacle Assembly (A5) (while the cables from the electrical interconnection assembly would be connected into the Port Receptacle Assembly, A6). Install and secure the side access panels once all connections are completed.

NOTE

Before assembly, ensure that the engine hatch gaskets have not been damaged. When torquing hatches and covers use the cross method. Refer to Appendix E for torque values.

WARNING

The intake plenum assembly weighs approximately 550 pounds. Use proper hoisting and lifting equipment to prevent possible injuries to personnel or damage to equipment.

e. The intake plenum is secured on the unmanned propulsion module, opposite side of the operator's cab. Install guide pins and use them to locate and install the intake plenum. Secure the intake plenum with the same fasteners used to secure the shipping plates. Retrieve guide pins. Connect the wire rope to the fire suppression trip mechanism (Figure 2-47, view C) to hold the air intake flapper door open.

WARNING

The Pump-Jet/Thruster hatch weighs approximately 900 pounds. This includes the storage cover that weighs approximately 60 pounds. Use proper hoisting and lifting equipment to prevent possible injuries to personnel or damage to equipment.

WARNING

The exhaust plenum assembly weighs approximately 425 pounds. Use proper hoisting and lifting equipment to prevent possible injuries to personnel or damage to equipment.

f. To install the exhaust plenums, remove the shipping plates from the Pump-Jet/Thruster hatch. Insure the hatch gasket is not damaged in the process. Locate them with the grating pointing aft. Secure with the same fasteners used to secure the shipping plates. Plug in exhaust fan cable to vent fan relay panel, A8 (Figure 2-47, view E). Store shipping plates separately.

WARNING

The electrical interconnection assembly weighs approximately 400 pounds. Use proper hoisting and lifting equipment to prevent possible injuries to personnel or damage to equipment.

CAUTION

The cables connecting the propulsion modules to the operator's cab are identical for both the starboard and port sides. When connecting the electrical cables, insure that the starboard cables are plugged into the starboard cable receptacle of the operator's cab and that the port cables are installed into the port side receptacle of the operator's cab.

CAUTION

When connecting electrical leads do not use excessive force.

CAUTION

Cable interconnect labeled "CAB END" shall be located on which ever side (Port or Starboard) that the cab has been mounted to prevent damage to equipment by improper connection.

NOTE

All electrical connections between the operator's cab and modules are uniquely constructed to prevent making wrong connections.

g. Lower the electrical interconnection assembly onto the Powered Section, between the operator's cab and the intake plenum. Remove the plain front access panels from the operator's cab and intake plenum. Feed the cables through the front access panels to the receptacles located inside the operator's cap and the intake plenum.
h. Connect cables in accordance with Figures 2-47 (View D) and 2-48. If the intake plenum is on the port propulsion module, then the CAB END cables will be connected to the Port Receptacle Assembly (A6) located in the intake plenum of the operator's cab. On the opposite side of the interconnection assembly, the intake plenum data cables will be joined at the back of the connector bracket, with the data cables from the unmanned propulsion module. The power cables on the unmanned side will come together, cable to cable.
i. Secure conduit entry plate to the operator's cab and the connector bracket to the intake plenum.

WARNING

The anchorboard weighs approximately 3500 pounds. Use proper hoisting and lifting equipment to prevent possible injuries to personnel or damage to equipment.

j. One (1) anchor per powered section is mounted on the anchor board of the Starboard propulsion module. The anchorboard and support weldment are secured with locking pins (Figure 2-47, View F). The rope has one end secured to the anchor and the other coiled on the deck. The locator buoy line is secured at the base of the anchor.
k. The stub mast is stowed on the lower main mast. Disengage from main mast and mov e to mounting location on the starboard side of the left end rake at the ISO corner connector, aft of the operator's cab. Insert into the wedge, turn 90° and it will lock into place. The electrical box shall face inboard. Connect cable between the stub mast, run it along the outer edge of propulsion module with operator's cab, and connect at receptacle found below intake louvre vent of operator's cab (Figure 2-47, View G).

WARNING

Once assembled, the complete navigational mast weighs approximately 400 pounds. Use proper hoisting and lifting equipment to prevent possible injuries to personnel or damage to equipment.

l. Assemble the two mast halves together and connect light cables before installation. Using appropriate hoisting equipment, align the holes in the base of the mast with the holes in the mounting at the base of the cab. Secure with pin (threaded bolt and nut). Using the hoisting equipment, raise the pinned mast into its operating position. With the cab on the starboard side of the Powered Section, locate the mast in the Port mast socket. Reverse the arrangement if the cab is on the Port side. Secure the main mast to the roof of the cab using the upper mast clamp. Cables will be connected through the navigation light switch box and the navigation light recepticle J1 (Figure 2-47; View H).

NOTE

The mast clamp can be positioned in either location on the roof of the operator's cab to match the port or starboard configuration of the main mast.

m. There are three types of handrails to install (Figure 2-47, View G). Installation of the first type (1) is installed in the same manner as the stub mast. They are inserted into the wedge and turned 90° to lock. The next type of handrails (2) are installed into the tube turns and held in place with 3/4 inch bolt and Friction Plate. The last type of handrails (3) are slid into the mounting plate and secured by inserting the locking pin through the plate base.

n. The handrail cable runs are installed with the lower run being outboard of the posts on all three types of handrails installed in Step m (2, Figure 2-47, view G). The upper two runs are all inboard. Slack is taken up by turning the turnbuckles located at the four corners of the section.

o. The portable fire extinguisher is mounted onto the provided bracket on exhaust plenum located Aft of the operator's cab (Figure 2-47).

p. The fully assembled powered section (Figure 2-49) is now ready for initial pre-start checks

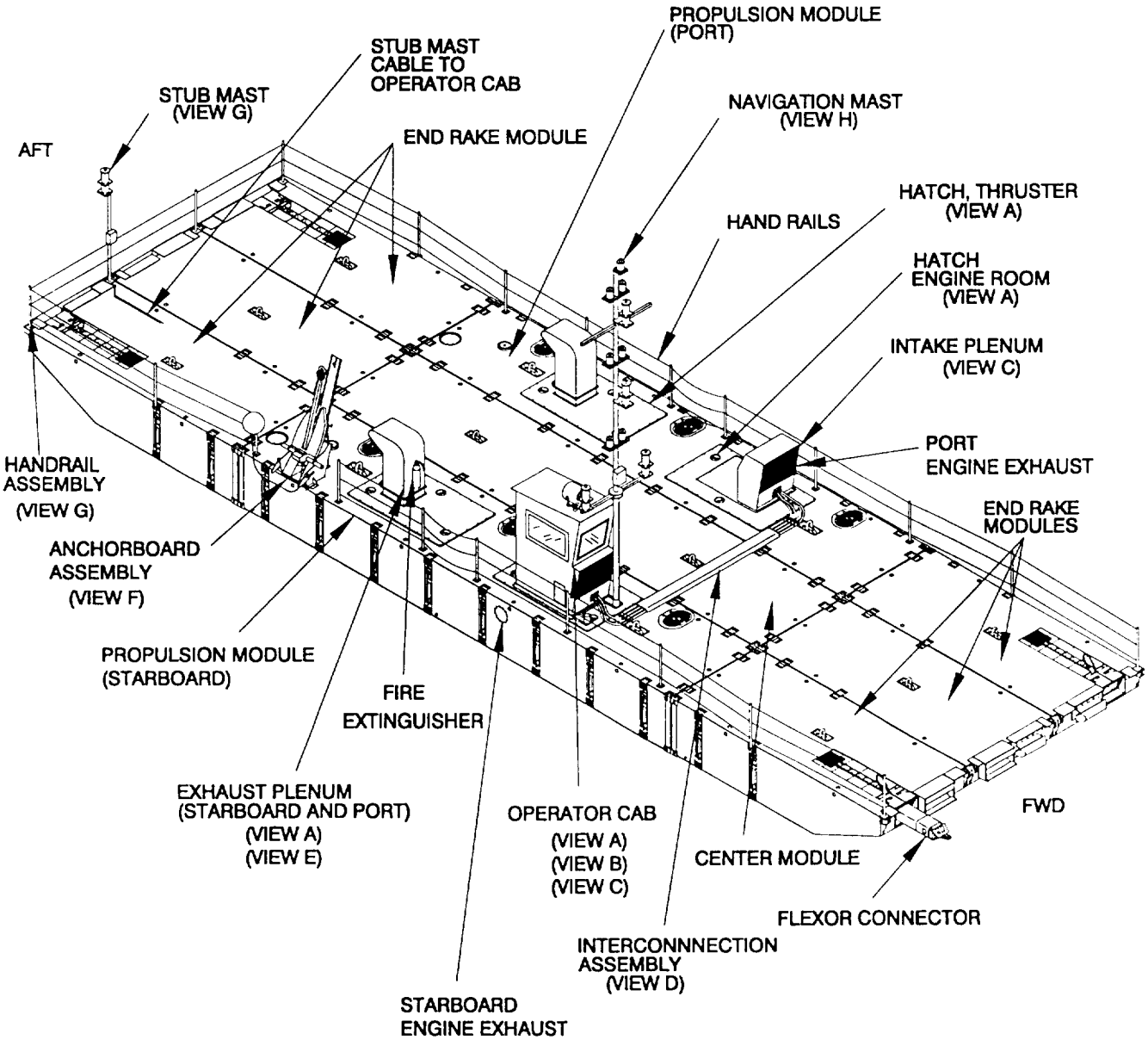

Figure 2-47. Propulsion Module/Powered Section Assembly. (Sheet 1 of 11)

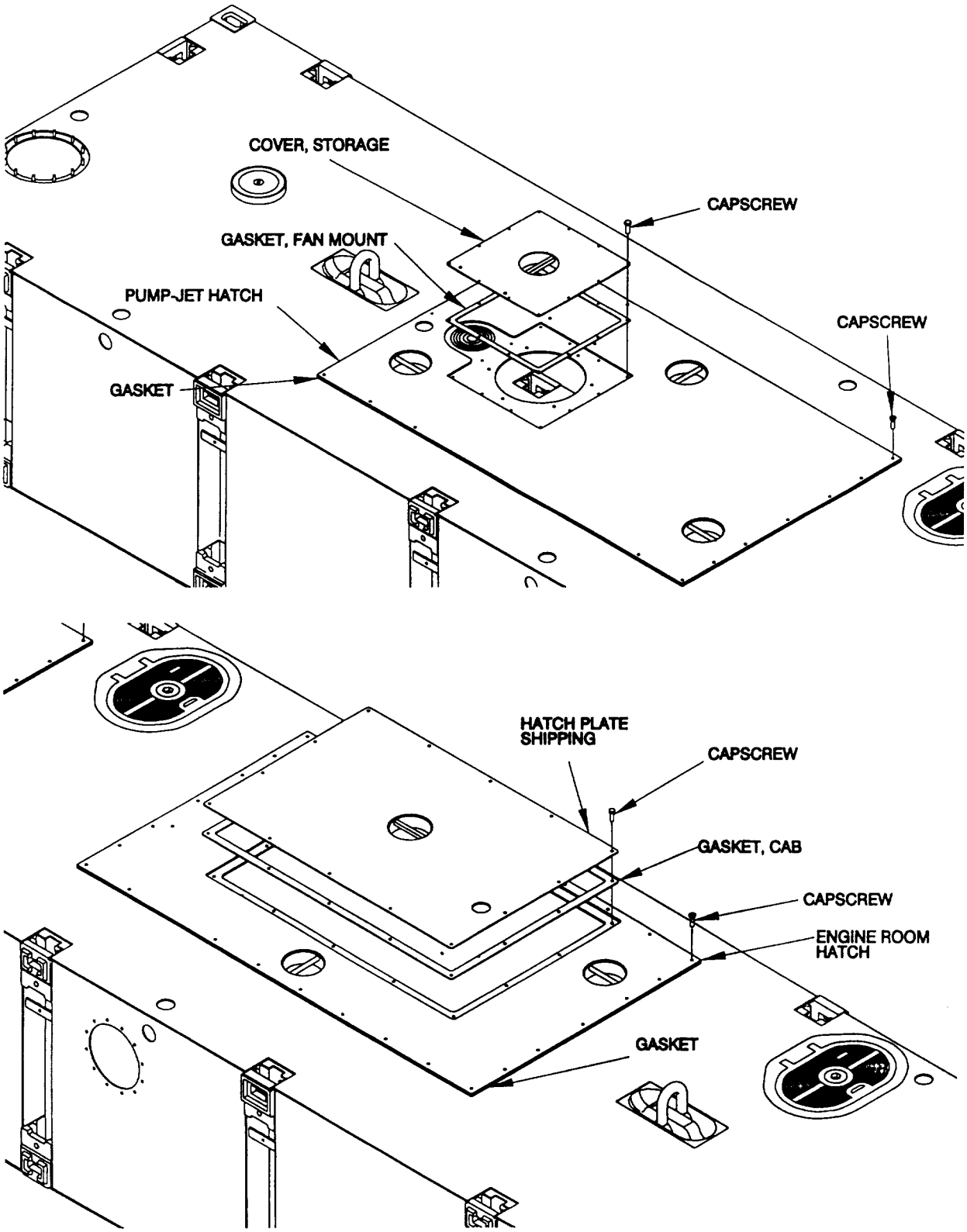

Figure 2-47. Propulsion Module/Powered Section Assembly (Operator's Cab - View A). (Sheet 2 of 11)

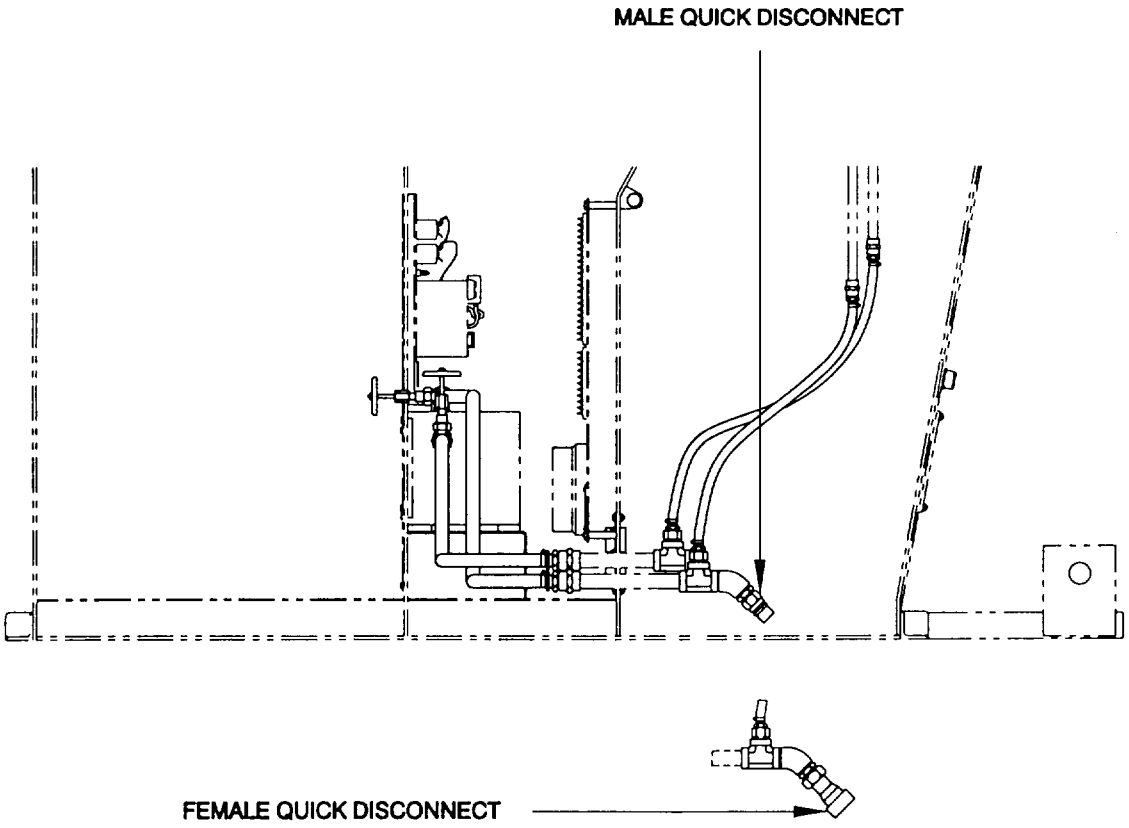

Figure 2-47. Propulsion Module/Powered Section Assembly (Operator's Cab - View B). (Sheet 3 of 11)

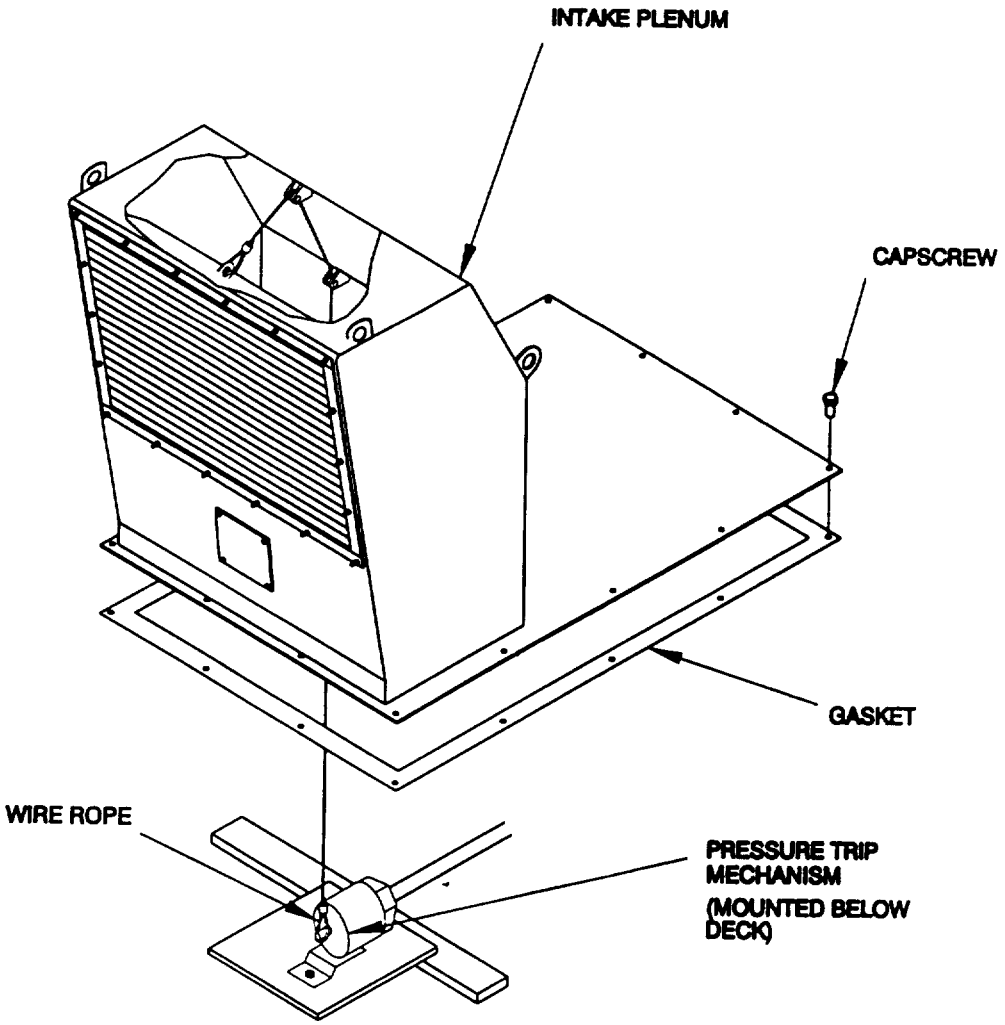

Figure 2-47. Propulsion Module/Powered Section Assembly (Operator's Cab - View C). (Sheet 4 of 11)

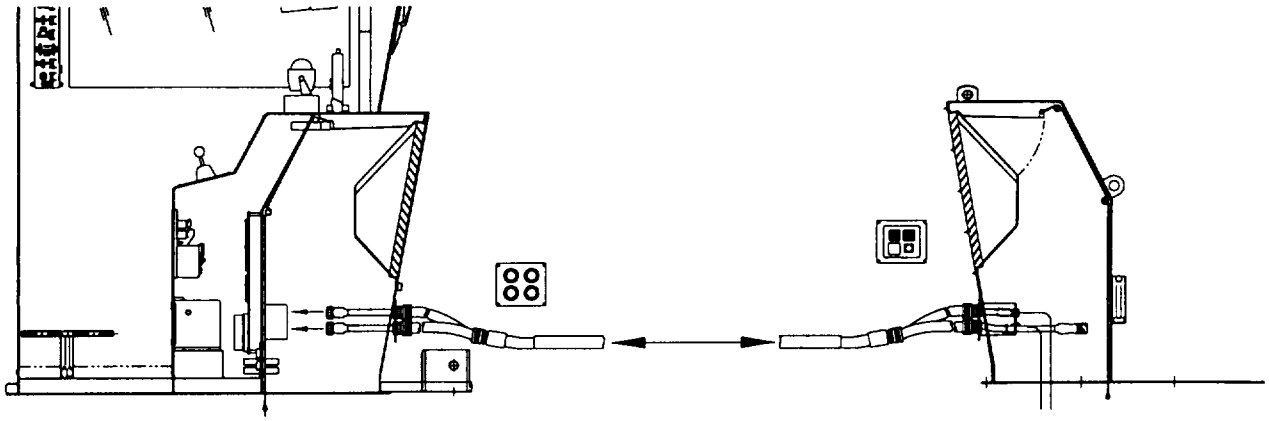

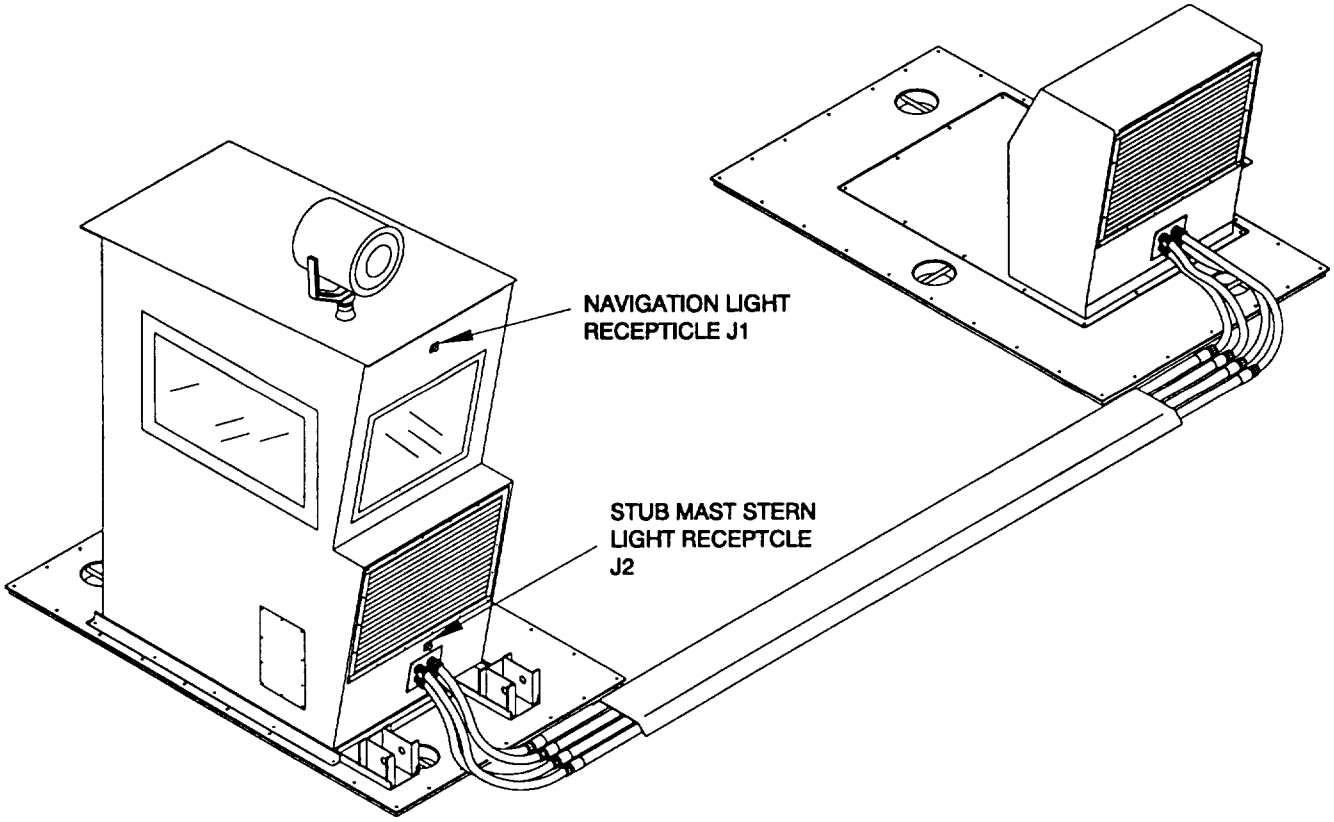

Figure 2-47. Propulsion Module/Powered Section Assembly (Interconnection Assembly - View D). (Sheet 5 of 11)

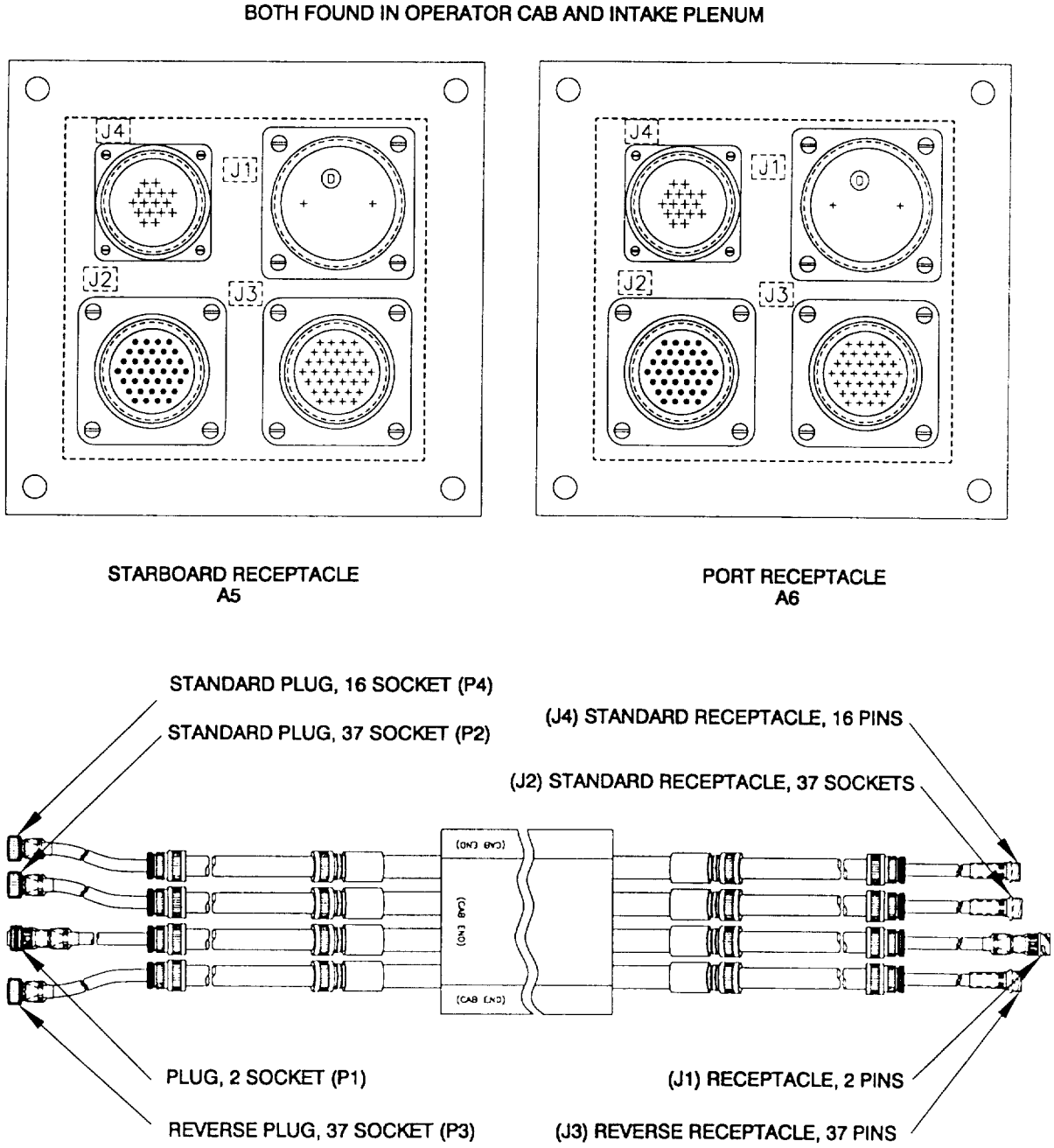

Figure 2-47. Propulsion Module/Powered Section Assembly (Interconnection Assembly - View D - Cont.). (Sheet 6 of 11)

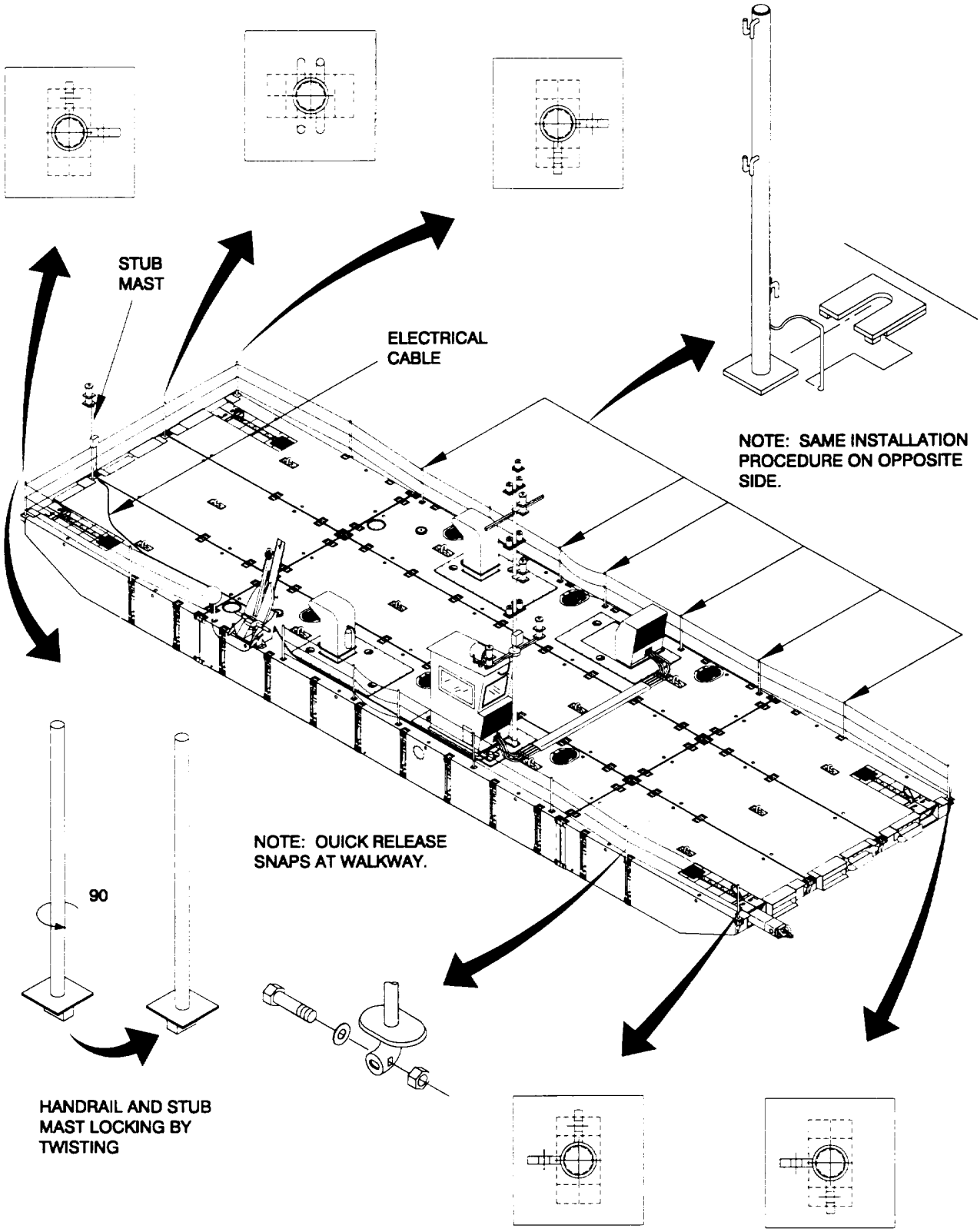

Figure 2-47. Propulsion Module/Powered Section Assembly (Handrail - View E). (Sheet 7 of 11).

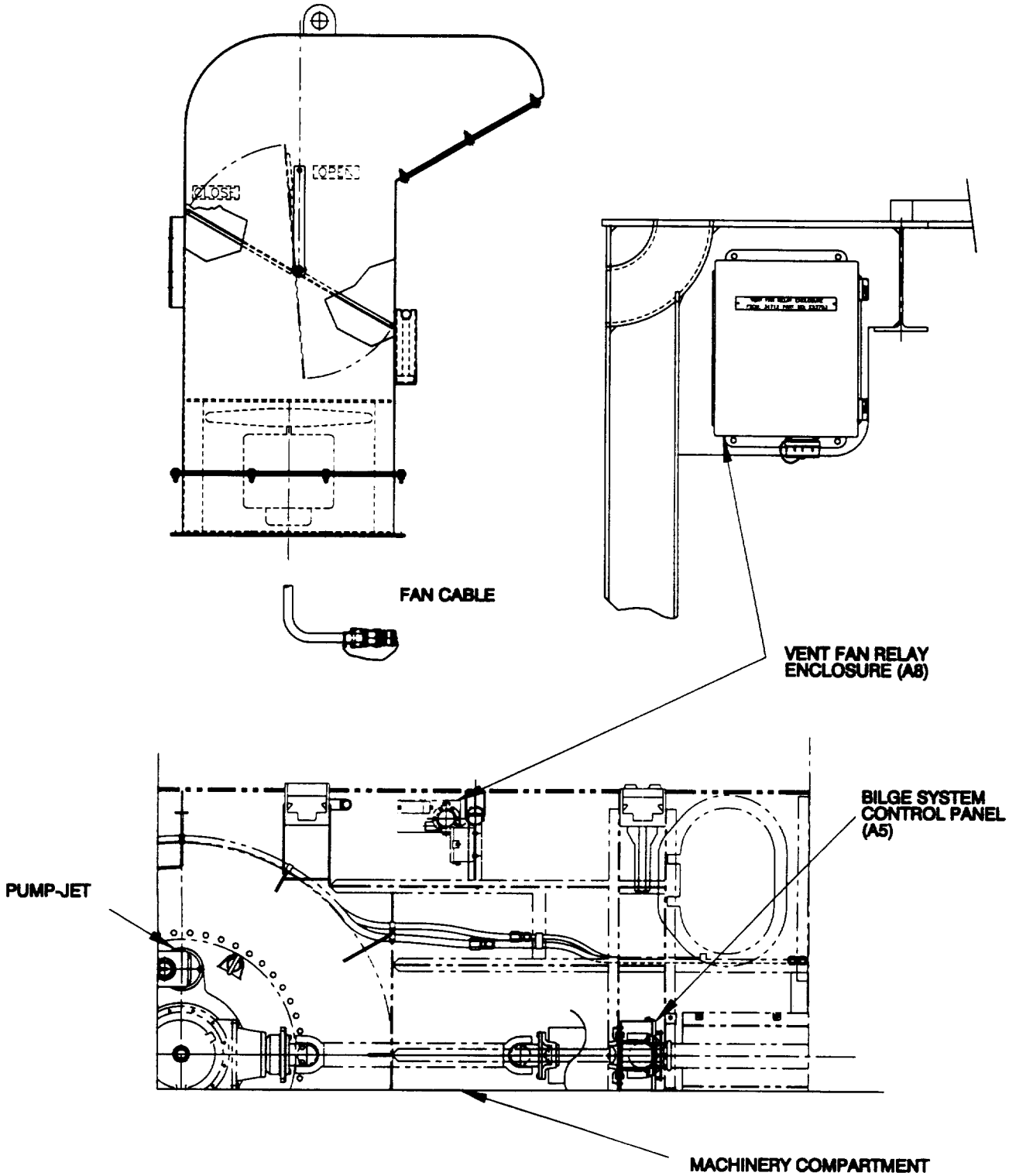

Figure 2-47. Propulsion Module/Powered Section Assembly (Exhaust Plenum - View F). (Sheet 8 of 11)

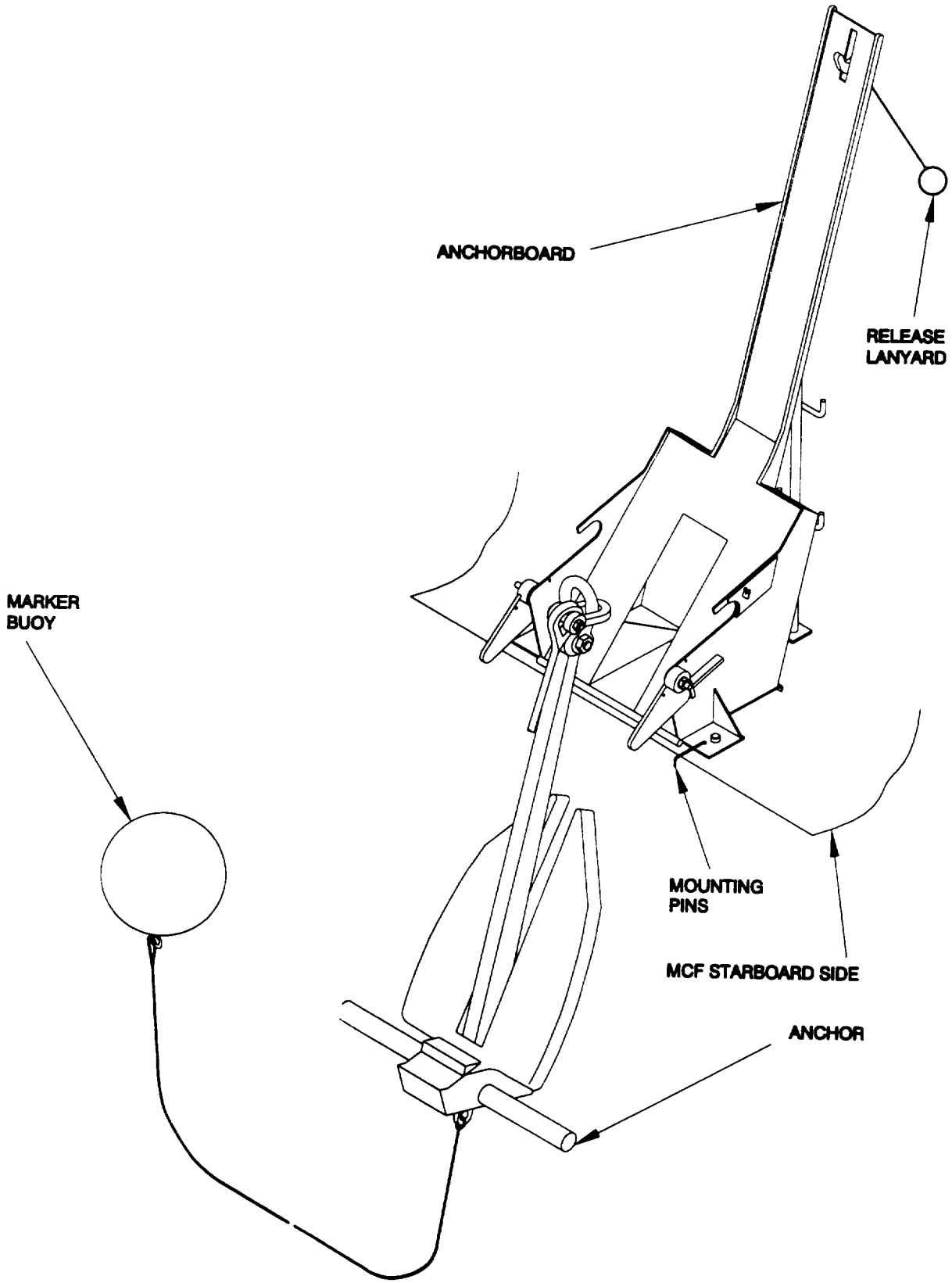

Figure 2-47. Propulsion Module Powered Section Assembly (Anchorboard Assembly - View G). (Sheet 9 of 11)

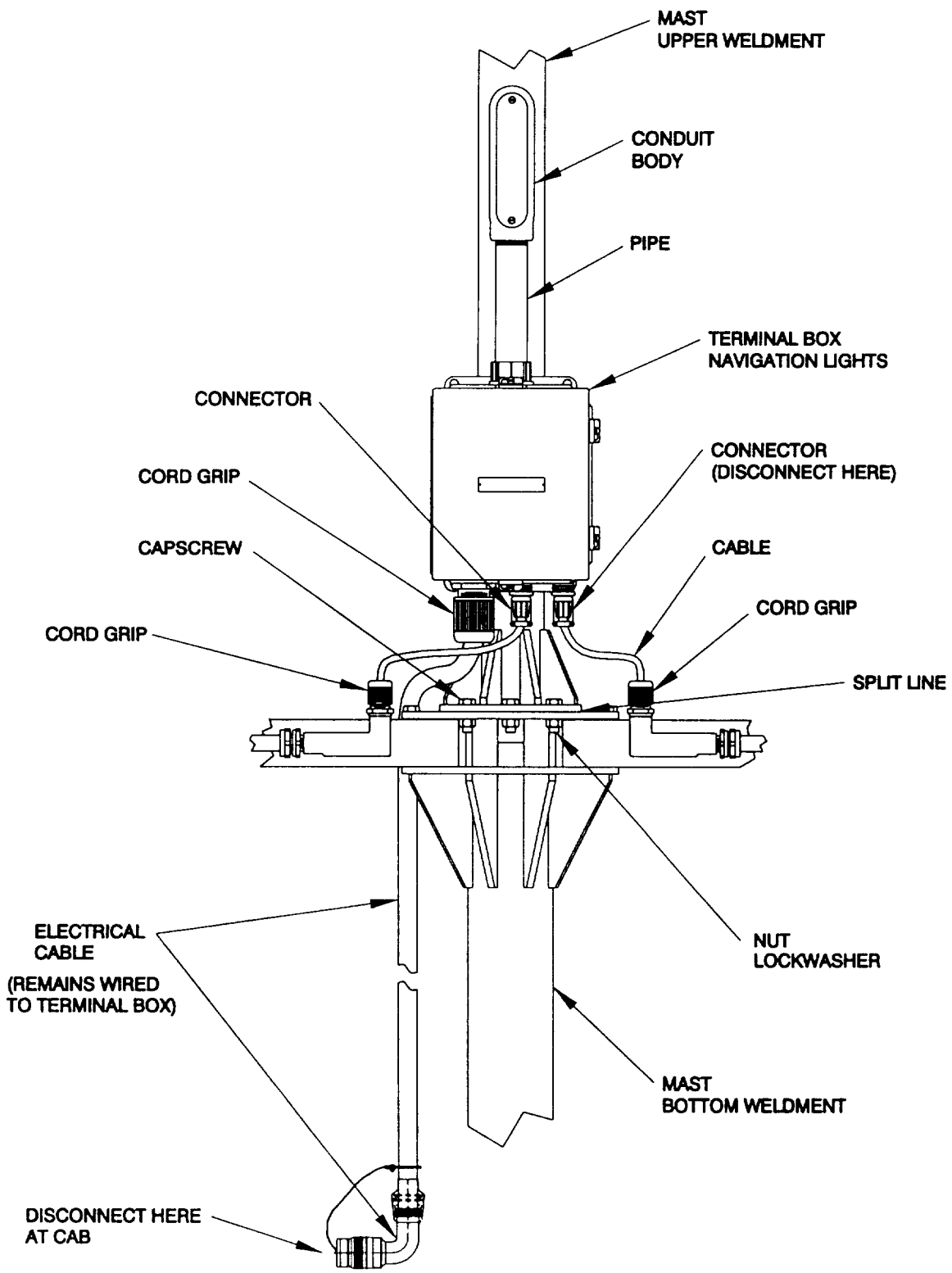

Figure 2-47. Propulsion Module/Powered Section Assembly (Navigation Mast - View H). (Sheet 10 of 11)

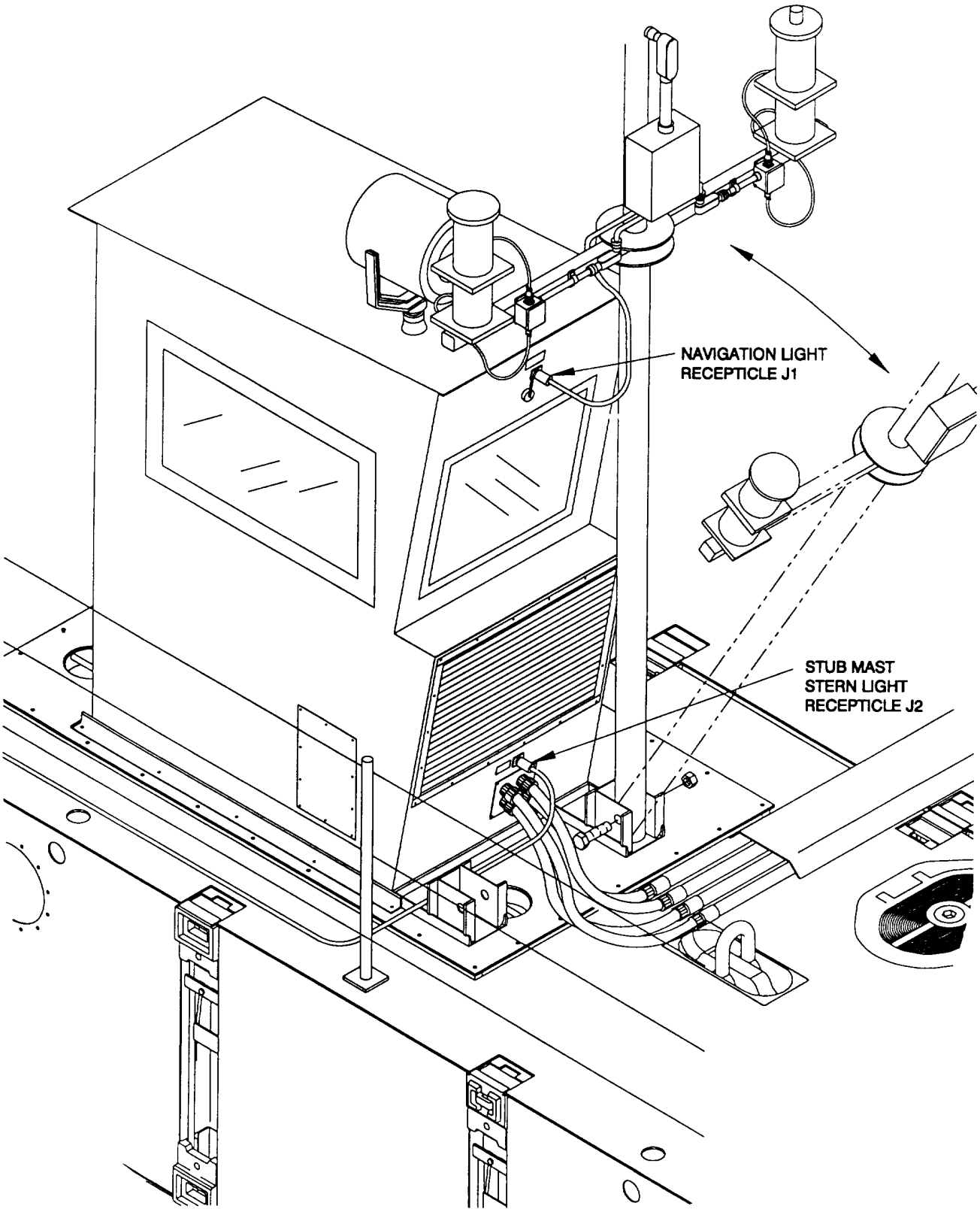

Figure 2-47. Propulsion Module/Powered Section Assembly (Raising the Navigation Mast). (Sheet 11 of 11)

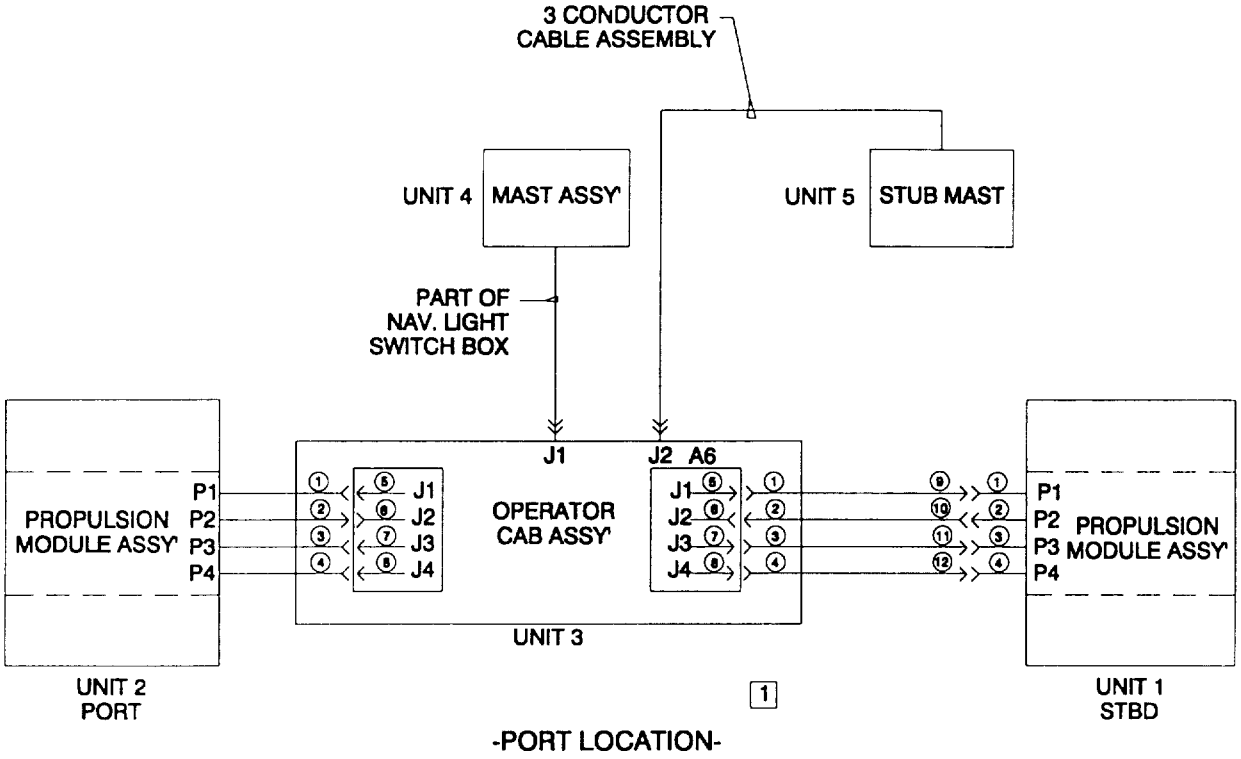

-PORT LOCATION-

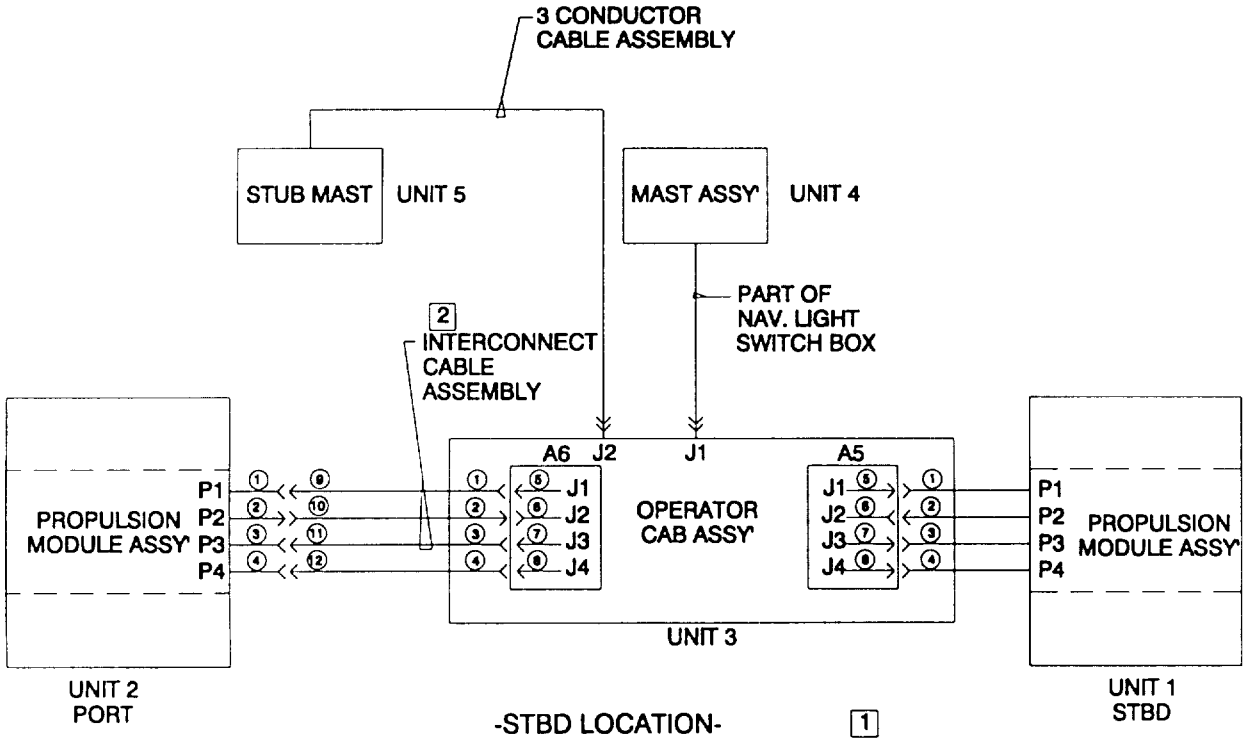

-STBD LOCATION-

Figure 2-48. Propulsion Module/Powered Section Electrical Connection Diagram. (Sheet 1 of 2)

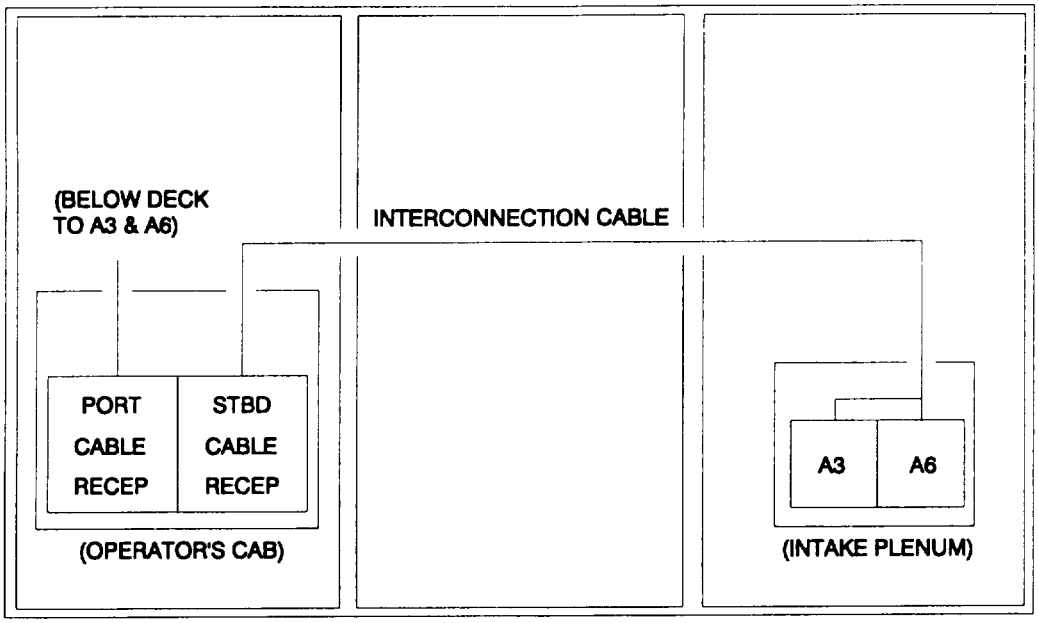

Operator's Cab on Port Propulsion Module Configuration

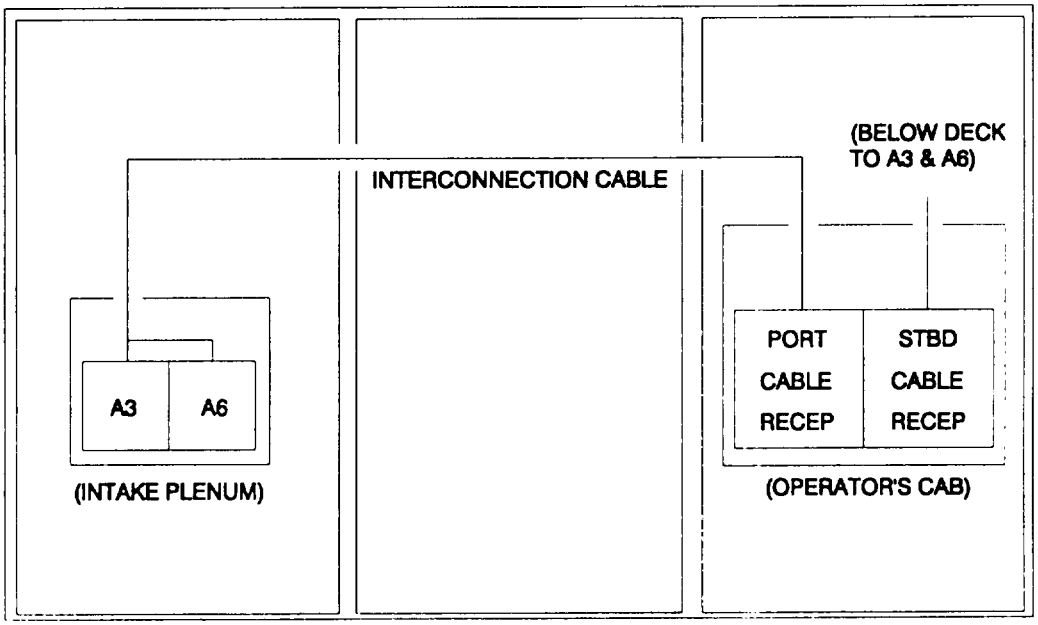

Operators Cab on Starboard Propulsion Module Configuration

Figure 2-48. Propulsion Module/Powered Section Electrical Connection Diagram. (Sheet 2 of 2)

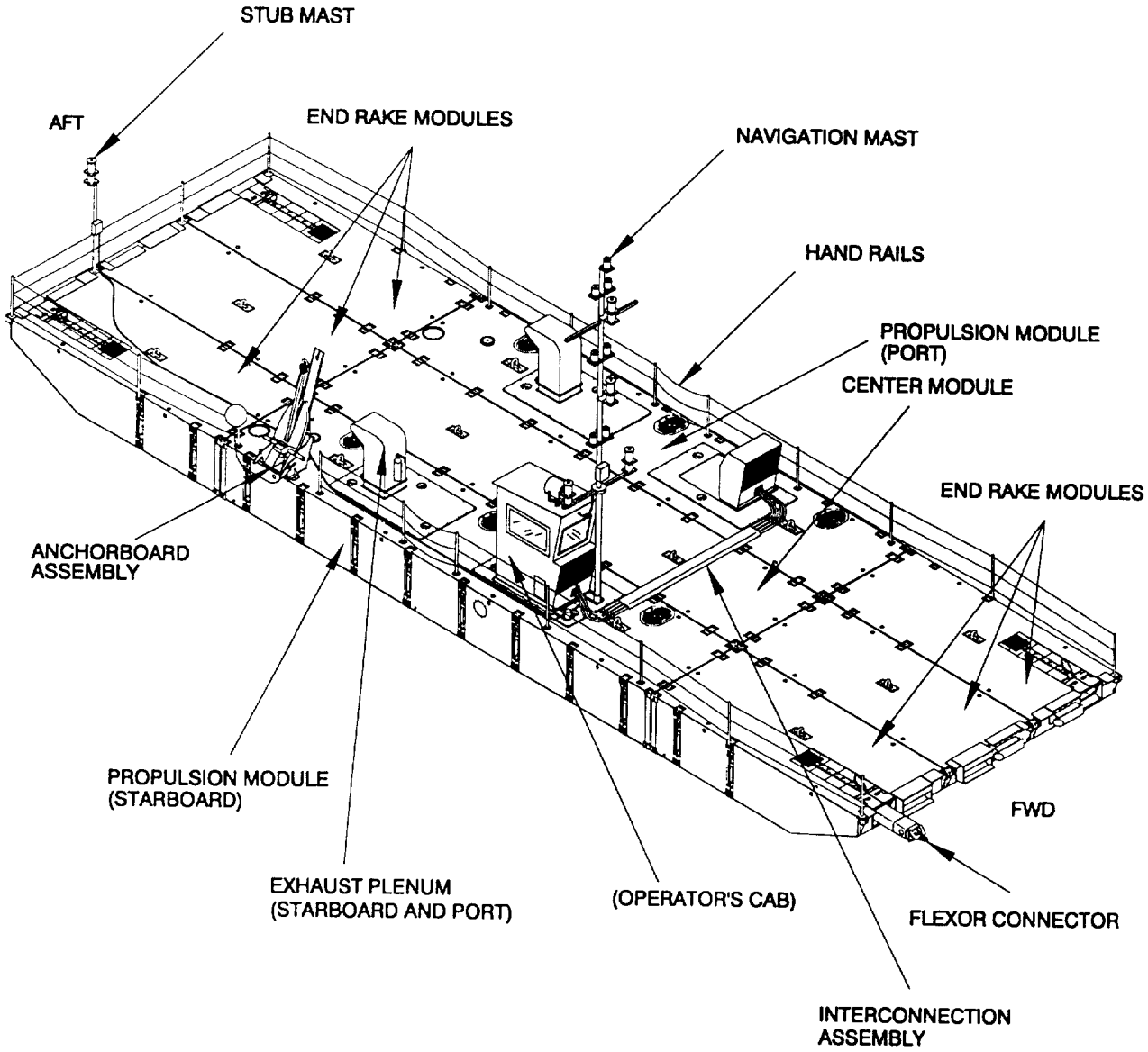

Figure 2-49. Assembled Powered Section.

2-8.3 Initial Pre-Start Checks. With the powered section assembled, personnel conduct initial pre-start checks prior to connection with the other assembled sections.

a. Perform PMCS in accordance with Table 2-20.
b. Use engine cold start procedures found in paragraph 2-14.
c. Cooling System Checks

1) Make sure all the drain cocks in the cooling system are installed (as they may have been removed for shipping) and are tightly closed.
2) Open the petcock near the top of the turbocharger and any other petcocks.
3) Remove the heat exchanger pressure control cap and fill with an ethylene glycol base antifreeze solution in the required concentration. In extremely hot climates, clean, soft, properly inhibited water may be used in the summer. Keep the coolant level at the bottom of the filler neck to allow for expansion of the coolant.
4) After filling the cooling system, close all petcocks. Fill the heat exchanger to the FULL COLD mark. Entrapped air must be purged after filling the cooling system.
5) Check sea water strainers and remove any accumulations of seaweed or debris. Strainers act as filters between the intake thru-hull fittings and the raw water pump and are easily fouled. Make sure all thru-hull valves in the cooling system, and raw water sea lines are open.

NOTE

Remove cover from raw water pump and inspect only if removing the propulsion module from extended storage.

6) Remove the cover from the raw water pump (Figure 2-50). Visually inspect for signs of damaged or broken vanes. Replace the impeller if damaged. Reinstall the cover with a new gasket.

CAUTION

Failure to install a new gasket and tighten cover bolts securely can result in pump leakage at start up.

Failure to prime the raw water pump may result in damage to the pump impeller and engine overheating.

7) Prime the raw water pump by removing the pipe plug or zinc provided in the pump outlet elbow and pouring at least a pint of water into the pump. Reinstall the plug or zinc.

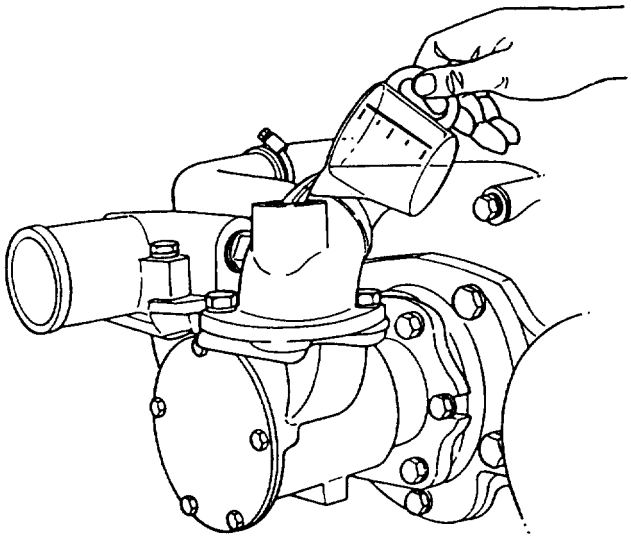

Figure 2-50. Priming Diesel Engine Raw Water Pump.

d. Lubrication System Checks.

CAUTION

Insufficient lubrication at start up can result in serious damage to engine components.

1) To ensure an immediate flow of oil to all bearing surfaces at initial engine start-up, the engine lubrication system should be charged with a pressure pre-lubricator. Or the rocker covers should be removed and clean lubricating oil should be poured over the rocker arms.
2) After pre-lubricating, add additional oil to bring the level to the proper mark on the dipstick.
3) Ensure marine gear is filled to the proper level with lubricating fluid.

e. Fuel System Checks.

1) Fill the tank with fuel. Keeping tanks full reduces water condensation and helps keep fuel cool, which is important to engine performance.
2) Ensure fuel supply shutoff valves are open.
3) The fuel system must be primed if air has entered the fuel system. Priming is done by a manual priming pump (Figure 2-52) to the inlet of the secondary fuel filter. Priming is not normally necessary if the filter elements are filled with fuel when installed and the manifolds in the head are not drained of fuel.

CAUTION

Under no circumstances should a starting aid such as ether be used to run the engine until the fuel system is primed. Injector damage will occur if this method is used. The heat generated by the external fuel source will cause the injector tips to be damaged when the fuel cools them. Plunger and bushing assemblies can be scored from running without lubrication.

DO NOT push starter button until starter motor stops turning.

4) Drain off any water that has accumulated in the fuel/water separator. Water in the fuel can seriously affect engine performance and may cause damage.

g. Connect discharge heads and cable control head to the CO2 cylinders (refer to figure 2-51).

WARNING

All personnel shall be clear of the machinery and fuel storage compartments and all hatches left open while CO2 connections are being made.

The carbon dioxide gas used in this system is stored in cylinders under extremely high pressure, equipped with high rate discharge valves, which when actuated, will open, remain open and cannot be closed. An uncontrolled release of this high pressure gas from and accidental discharge, improper handling, or damage to parts can result in a violent and rapid propulsion of the cylinder(s), capable of causing severe equipment damage, personal injury, or death to personnel. All warnings and instructions shall be followed for the safe handling, installation, service and inspection of the cylinders.

Because CO2 reduces the available oxygen in the atmosphere, it will not support life. Extreme caution shall be used when handling of servicing components of this system. Accidental discharge of this agent can cause serious injury or death to personnel.

NOTE

Teflon seal tape shall be used on all threaded pipe joints.

1) Thread flexible discharge hoses with attached discharge heads into the inlet tee's of the hard pipe agent discharge plumbing.
2) Remove and stow the cylinder caps.
3) Beginning with the lower cylinder; thread the discharge heads onto the cylinders.
4) Remove protective cover from the control port of the upper cylinder. Retain protective cover.
5) Remove cover from the control head. Making sure the plunger is below the surface of the control head body, position the control head at the cylinder valve port with the arrow pointing in the direction of pull.
6) Place cable pipe with cable lock nut in position to the control head body. Make sure cable wheel on the control cable is in the "set" position with the wheel assembly positioned at the start of stroke. Insert closure disc and replace cover on control head. Control head is now armed.

CAUTION

To ensure that the manual lever does not snag or trap cable, the local manual release lever must be in the SET position with the locking pin and seal wire installed before assembling control head cover to body.

7) Assemble control head to cylinder valve actuation port. Tighten swivel nut securely.

h. Conduct checks in Table 2-23, "Modular Causeway Ferry Operator Checklist".

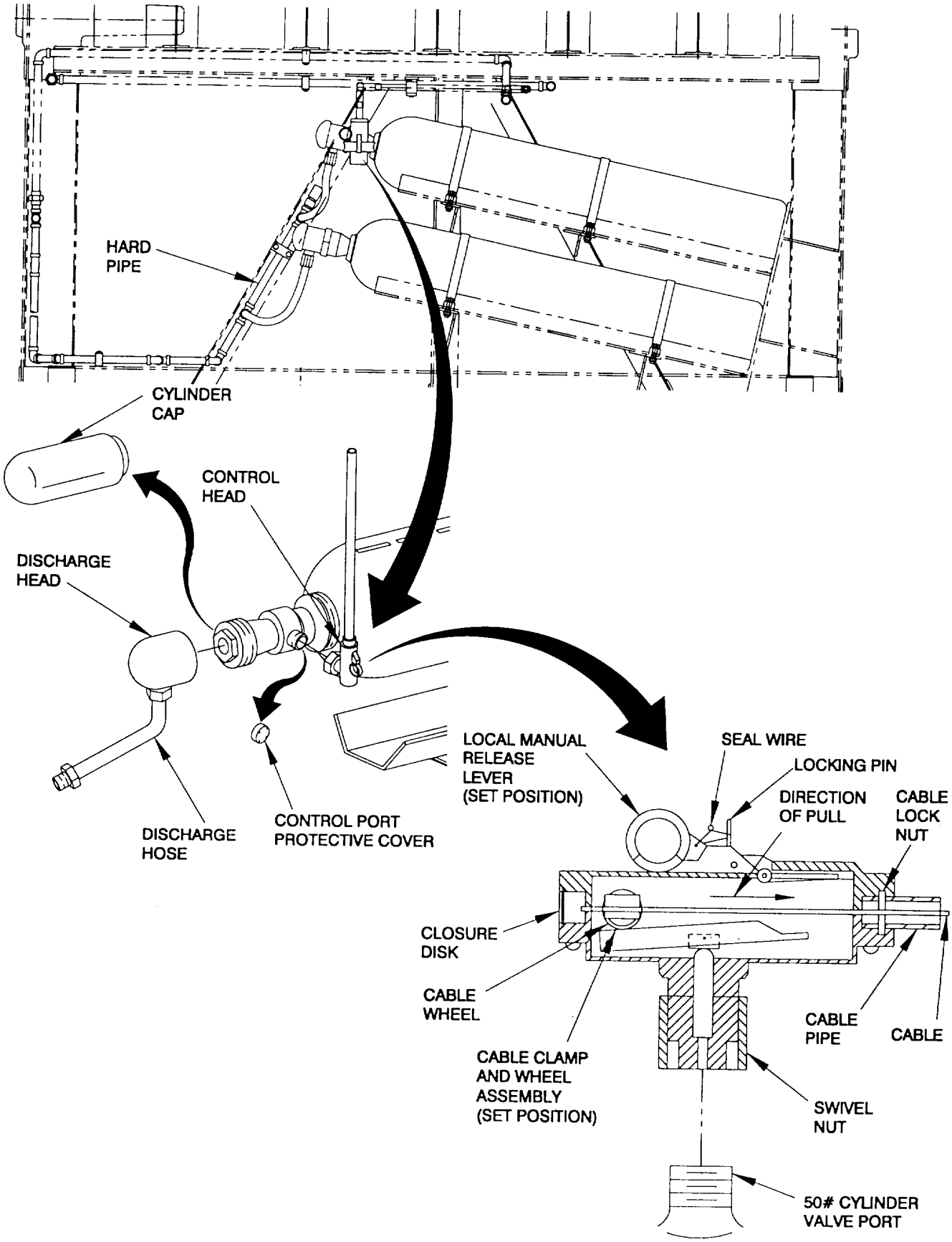

Figure 2-51. Fire Suppression System Installation.

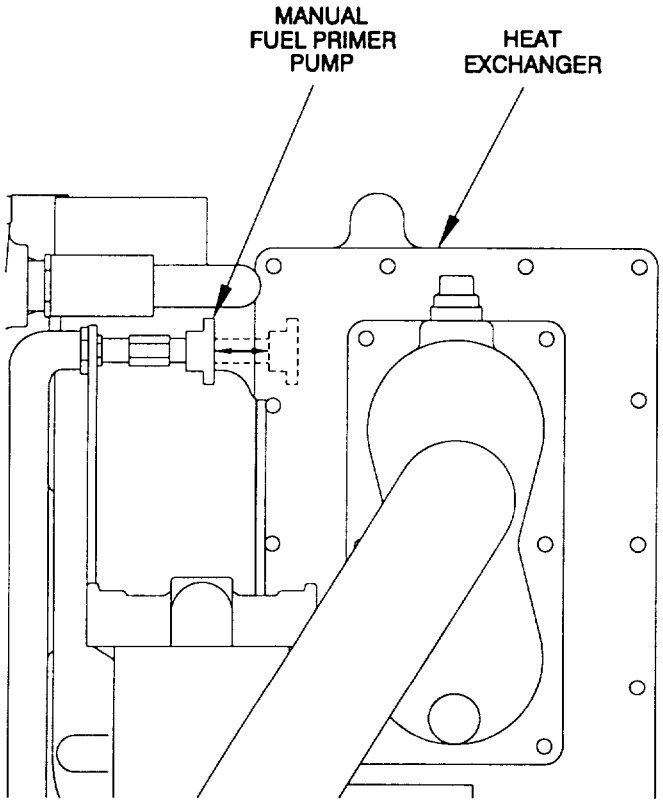

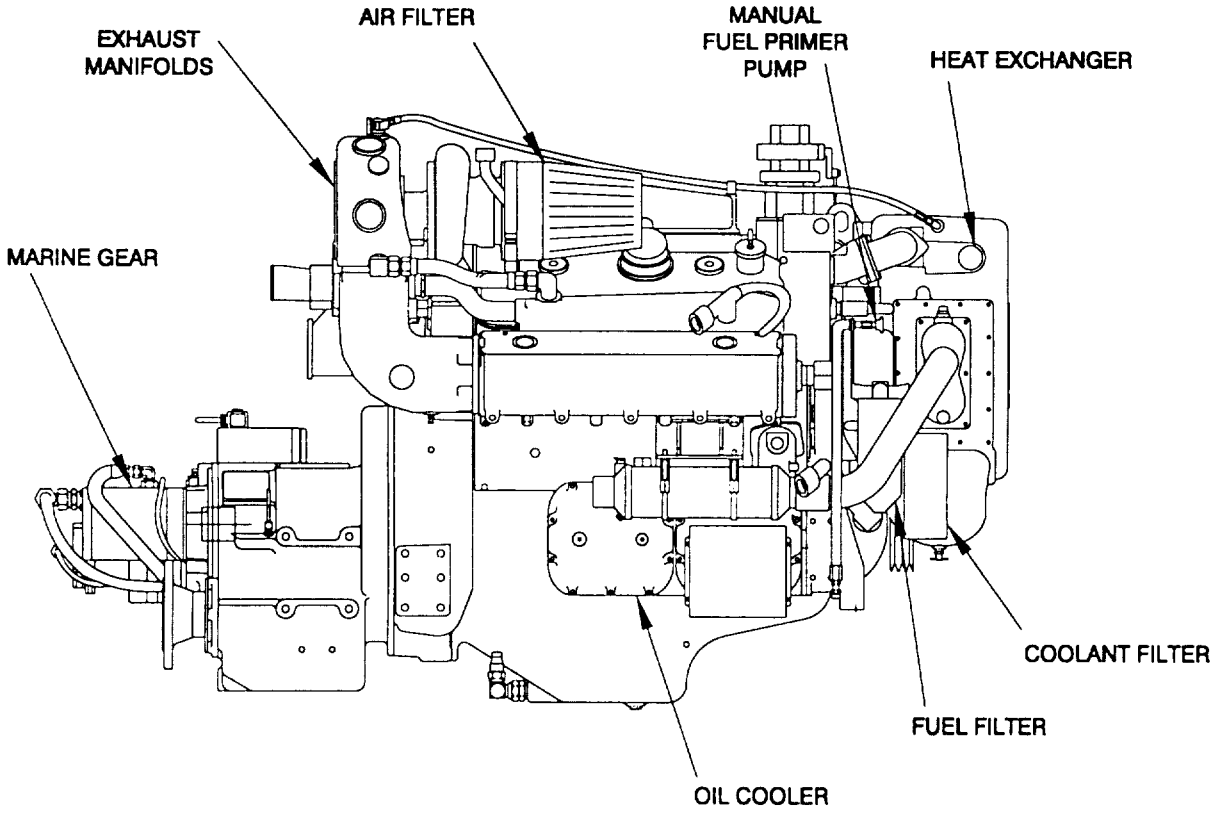

Figure 2-52. Fuel System Priming Pump.

Table 2-23. Modular Causeway Ferry Operator Checklist.		
ITEM NO.	**PROCEDURE**	**INITIAL WHEN COMPLETED**
1.	Verify that PMCS has been performed in IAW Table 2-20 and that no personnel are below deck before starting the engines.	
2.	Verify that Fire Suppression systems are in the working order.	
3.	Verify that raw water butterfly valves (Port and Stbd) are open.	
4.	Verify that raw water valves on marine gear and transfer case oil coolers (Port and Stbd) are open.	
5.	Verify that fuel valves (Port and Stbd) are open.	
6.	Verify that exhaust flappers (Port and Stbd) are unlatched.	
7.	Verify the MAIN circuit breaker switches at Port and Stbd Propulsion Module Circuit Breaker Panels (A6) are in the UP (ON) position. Verify all other circuit breaker switches are in the UP (ON) position.	
8.	Switch all circuit breaker switches on the Cab Circuit Breaker Panel 'A3" to the UP (ON) position.	
9.	Switch ENG POWER toggle switches to the ON position (Port and Starboard).	
10.	Verify that the THROTTLE CONTROL levers are in the idle (all the way back) position (Port and Starboard).	
11.	Verify that the CLUTCH control switches are in the DISENGAGED position (Port and Starboard).	
12.	Verify that machinery compartment VENT FANs have run for 5 minutes prior to starting the engines (Port and Starboard).	
13.	Verify ENG ALARM toggle switches are set to ALARM (Port and Starboard).	
14.	Depress engine START buttons to start engines (one at a time). Idle engines to warm up (Port and Starboard).	
15.	Observe engine OIL PRESSURE (40-70 psi normal operating or 32 psi minimum).	
16.	Observe that TACHometer is functioning.	
17.	Observe that AMMETER is functioning.	
18.	Verify water is coming out of exhaust and discharge ports.	
19.	Verify FIRE warning alarm toggle switches (Port and Starboard) are set to ALARM.	
20.	Verify FLOODING warning alarm toggle switch is set to ALARM.	
21.	Test WSHLD WIPER for operation.	
22.	Test NAV HORN for operation.	
23.	Test SPOTLIGHT for operation.	
24.	Test CAB HEATER FAN for operation.	
25.	Test DEFROSTER for operation.	
26.	Test PANNEL DIMMER control for operation of panel lights.	

Table 2-23. Modular Causeway Ferry Operator Checklist.

ITEM NO.	PROCEDURE	INITIAL WHEN COMPLETED
27.	Test all Navigation Lights to ensure they are operational.	
28.	Observe engine OIL TEMPerature 215° F - 230° F.	
29.	Observe engine WATER TEMPerature after warm up 170° F - 187° F.	
30.	Ensure engine Startup Time is entered in Engine Log.	
31.	Operate STEERING CONTROL levers and observe PORT and STBD Steering Indicators. Observe water jet wake relationship to steering indicator positions.	
32.	Verify throttle controls are operational.	
33.	Verify clutch controls are operational.	
34.	Listen for any unusual noises and look for unusual smoke.	

NAME and RANK (Print):	SIGNATURE:	DATE:
CHIEF ENGINEER NAME and RANK (Print):	SIGNATURE:	DATE:
VESSEL MASTER NAME and RANK (Print)	SIGNATURE:	DATE:

2-9 INITIAL ADJUSTMENTS, CHECKS, AND SELF-TEST . Prior to operation of the MCF, the operator is to review all daily maintenance that has been completed and prestart-up checks have been completed. Prior to starting verify all personnel are ready, properly clothed, life jackets on, required safety gear on/or available, if loaded cargo properly secured and if any maintenance repairs or replacement of equipment reported has been done.

2-10 DECALS AND INSTRUCTION PLATE LOCATIONS . Decals and instruction plates are located in accordance with Table 2-24 and Figure 2-53. Personnel should become familiar with their maintenance and safety statements.

Table 2-24. Decals and Instruction Plate Locations

ITEM	LOCATION	INSTRUCTIONS
1	Marine Gear	Adjustments and Lubrication
2	Heat Exchanger	Caution under pressure - Hot Warning
3	Air Filter (Turbocharger)	Red button indicates replacement required
4	Cooling Filter	Instructions when replacing
5	Fuel Filter	Instructions when replacing
6	Oil Filter	Instructions when replacing
7	Engine Alternator Pulley	Warning torque requirements
8	Rocker Arm Cover	Engine option number type
9	Pump-Jet Hydraulic Valves	M1, M2, M3, M4, a, b, c, h, k, m, n, j, r, v, w, z; line identification
10	Fire Extinguisher, Hand Operated	Operation instructions
11	Exhaust Fan	Arrow attached to fan housing show direction and airflow
12	Fire Suppression System, Pressure Switch	Reset instructions
13	Fire Suppression System, Alarm	Evacuation instructions
14	Fire Suppression System, Lever Operated Control Head	Open-Close Instructions
15	Fire Suppression System, Flush Pull Box Cable	Operation Instructions

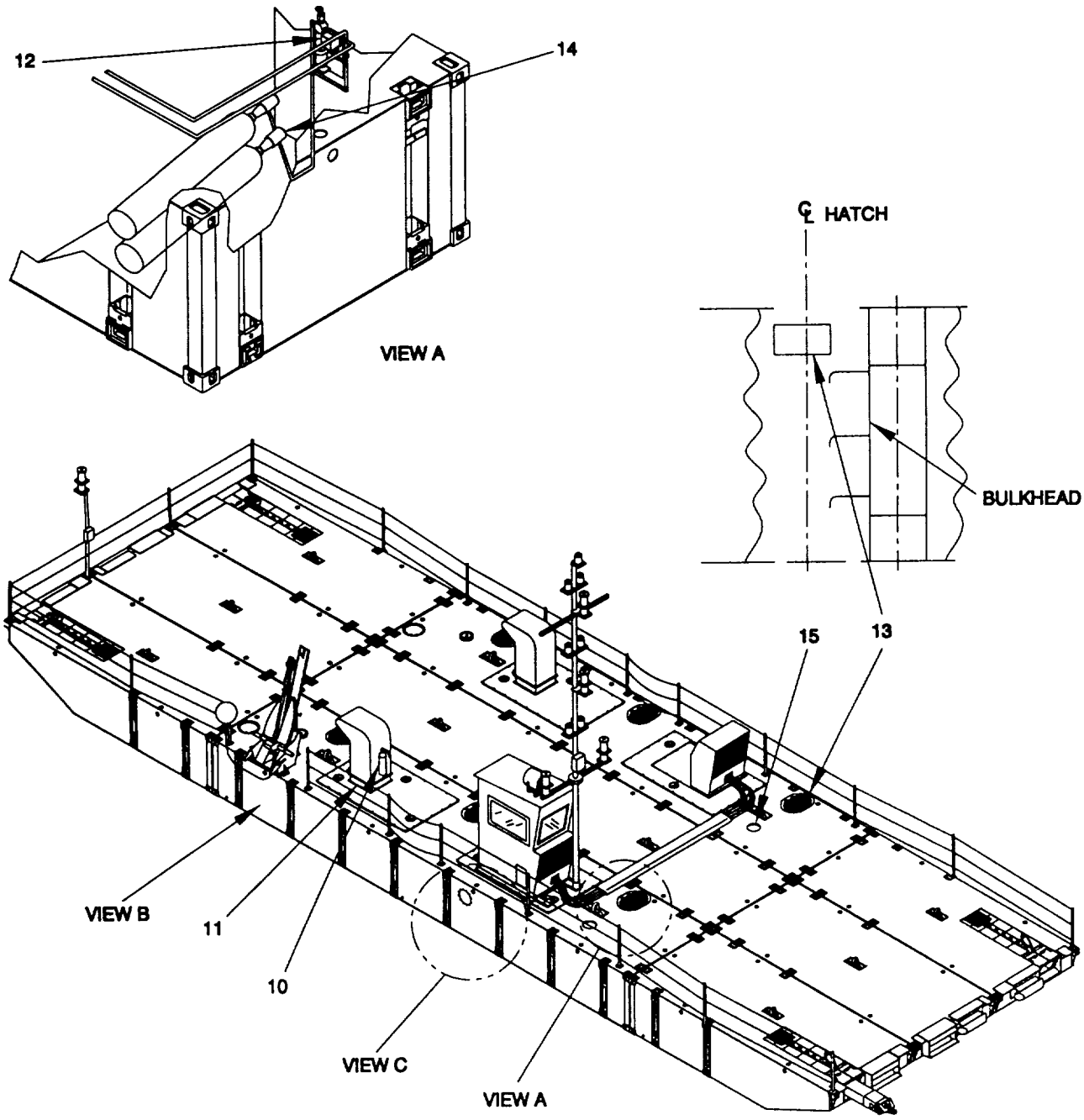

Figure 2-53. Decals and Instructions Locations (Sheet 1 of 3).

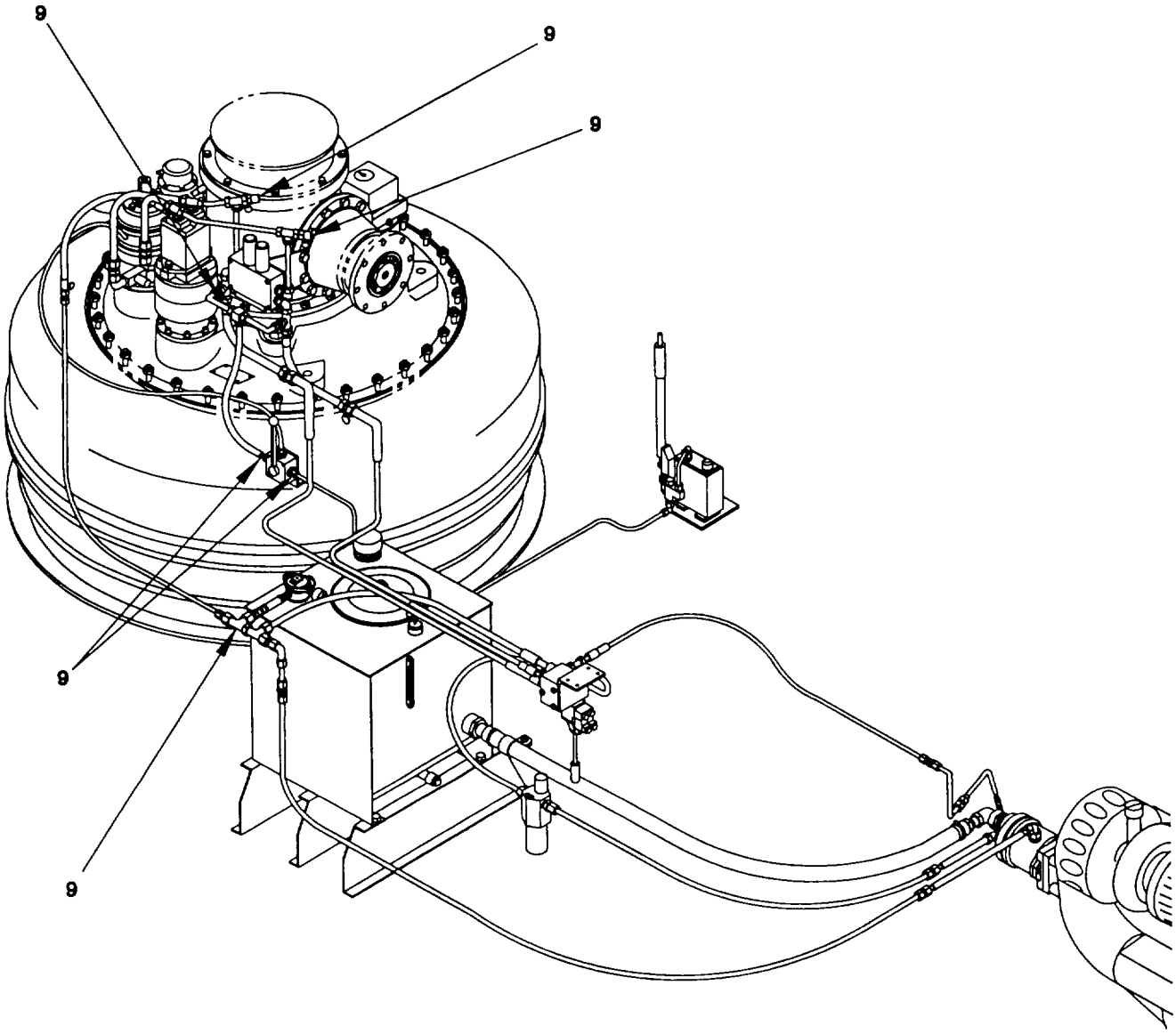

Figure 2-53. Decals and Instructions Locations (Sheet 2 of 3).

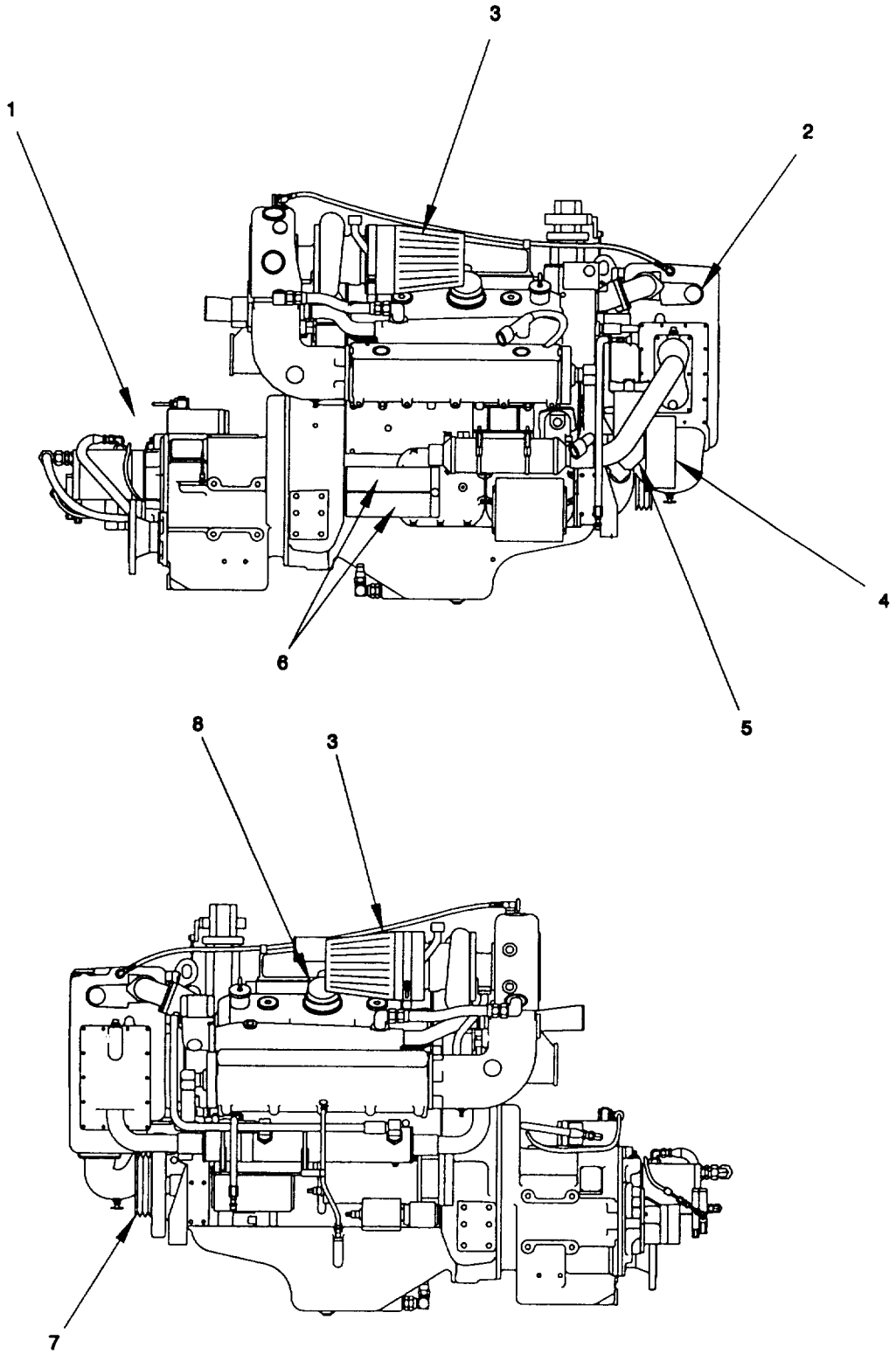

Figure 2-53. Decals and Instructions Locations (Sheet 3 of 3).

2-11 OPERATING PROCEDURES. After initial adjustments, checks, and self test are completed (Table 2-23), the operator can then ready the crew for start of mission. Start up engines, verify controls/indicator function and indicate proper readings, alarm indicators function and verify crew is ready for mission to start. Operator may then remain in a stand-by mode until orders are given to start or abort mission. Using operator controls and indicators (Figure 2-55), the sections can be moved together to form a complete Modular Causeway Ferry (Figure 2-54). If the mission is aborted, refer to Table 2-20, “Operator/Crew Preventive Maintenance Checks and Services (PMCS)" for shut down (after maintenance checks).

a. Ensure that PMCS has been completed prior to start of mission.
b. Position steering nozzles to desired direction of thrust.
c. Engage clutches.
d. To move the MCF, push throttle control levers, port and starboard propulsion modules, forward to increase engine rpm. Pulling throttle control levers back towards the operator will decrease the engine rpm.
e. Steering is accomplished by actuation of the port and/or starboard steering control levers which, in turn, control the rotation of the port and/or starboard steering nozzles. Position of each steering nozzle is registered on dial indicators located on the middle control panel. The dial indicator needles point OPPOSITE the direction of thrust. The farther off of center (forward or backward) a steering control lever is moved, the faster the steering nozzle and indicator needle will rotate. Pushing a control lever forward will cause the steering nozzle and indicator needle rotate in the clockwise direction. Pulling the control lever backward will cause the steering nozzle and indicator needle rotate in the counterclockwise direction. The control lever, when released, will spring return to center; the affected steering nozzle will remain at the last position called for when the lever was released until rotation is again called for by actuation of the control lever.
f. Upon completion of mission ensure that postoperative PMCS procedures have been completed prior to and following engine shut down.

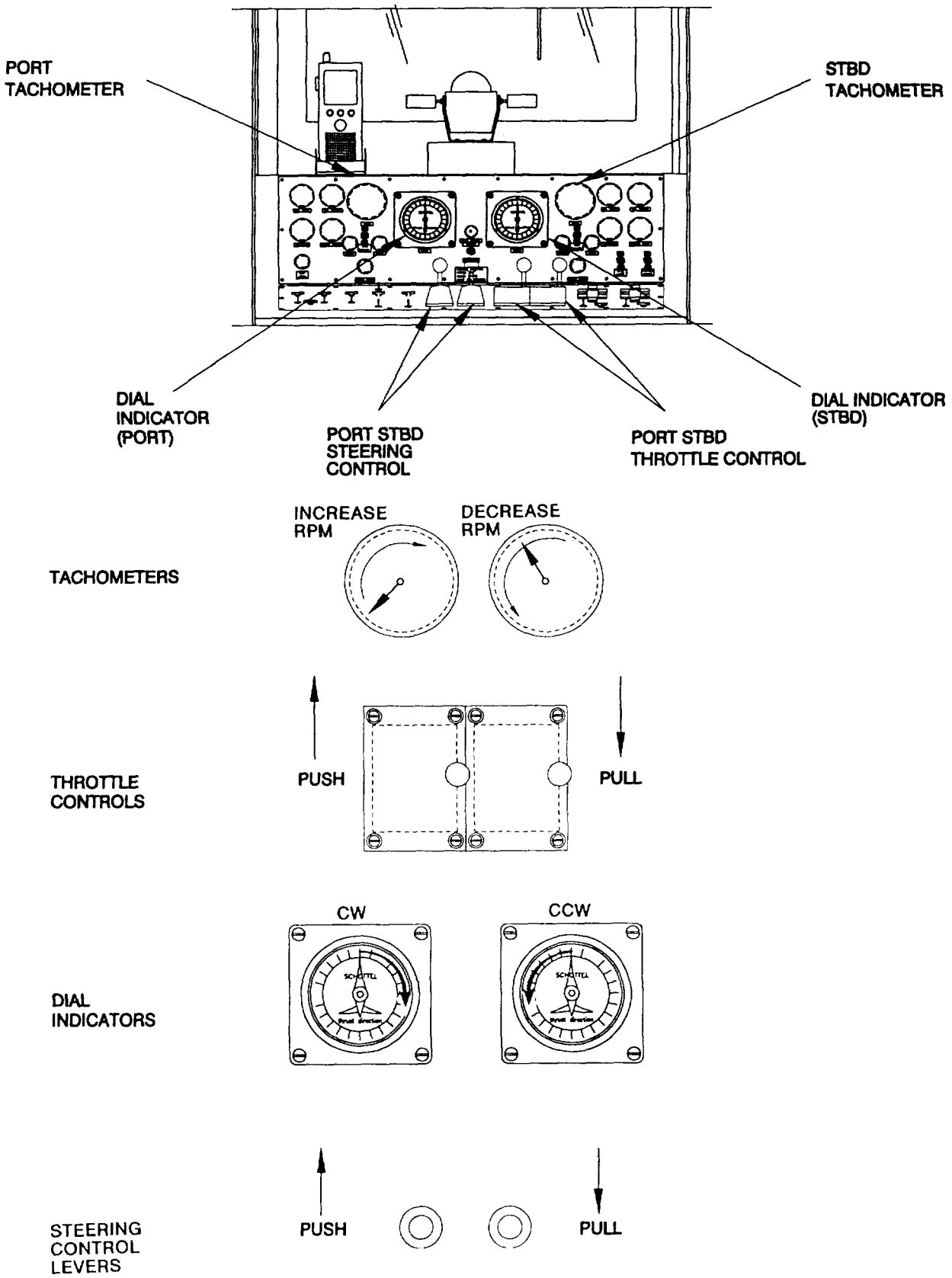

Figure 2-54. Operator MCF Maneuver Controls, Indicators, and Signals (Sheet 1 of 5).

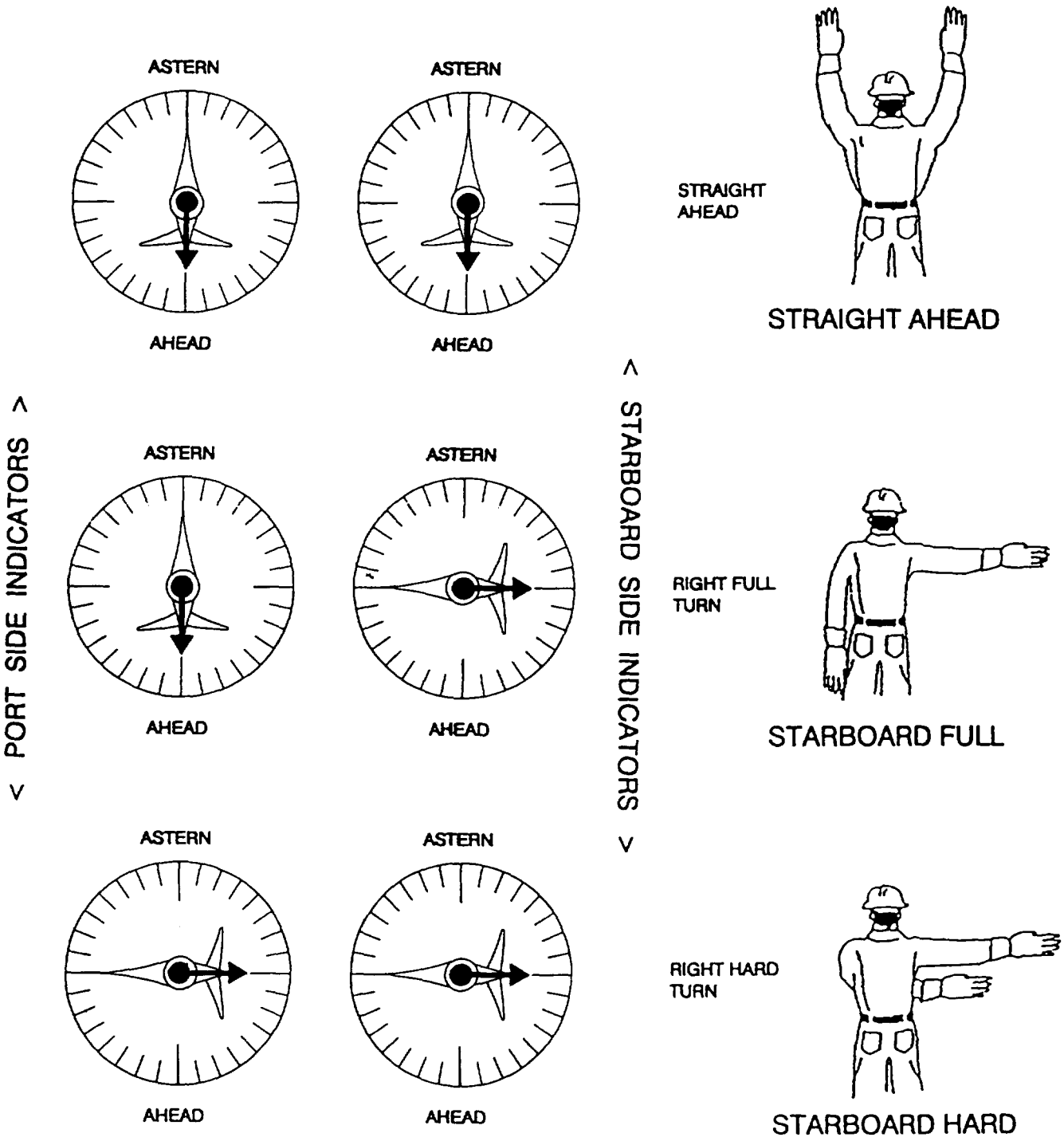

Figure 2-54. Operator MCF Maneuver Controls, Indicators, and Signals (Sheet 2 of 5).

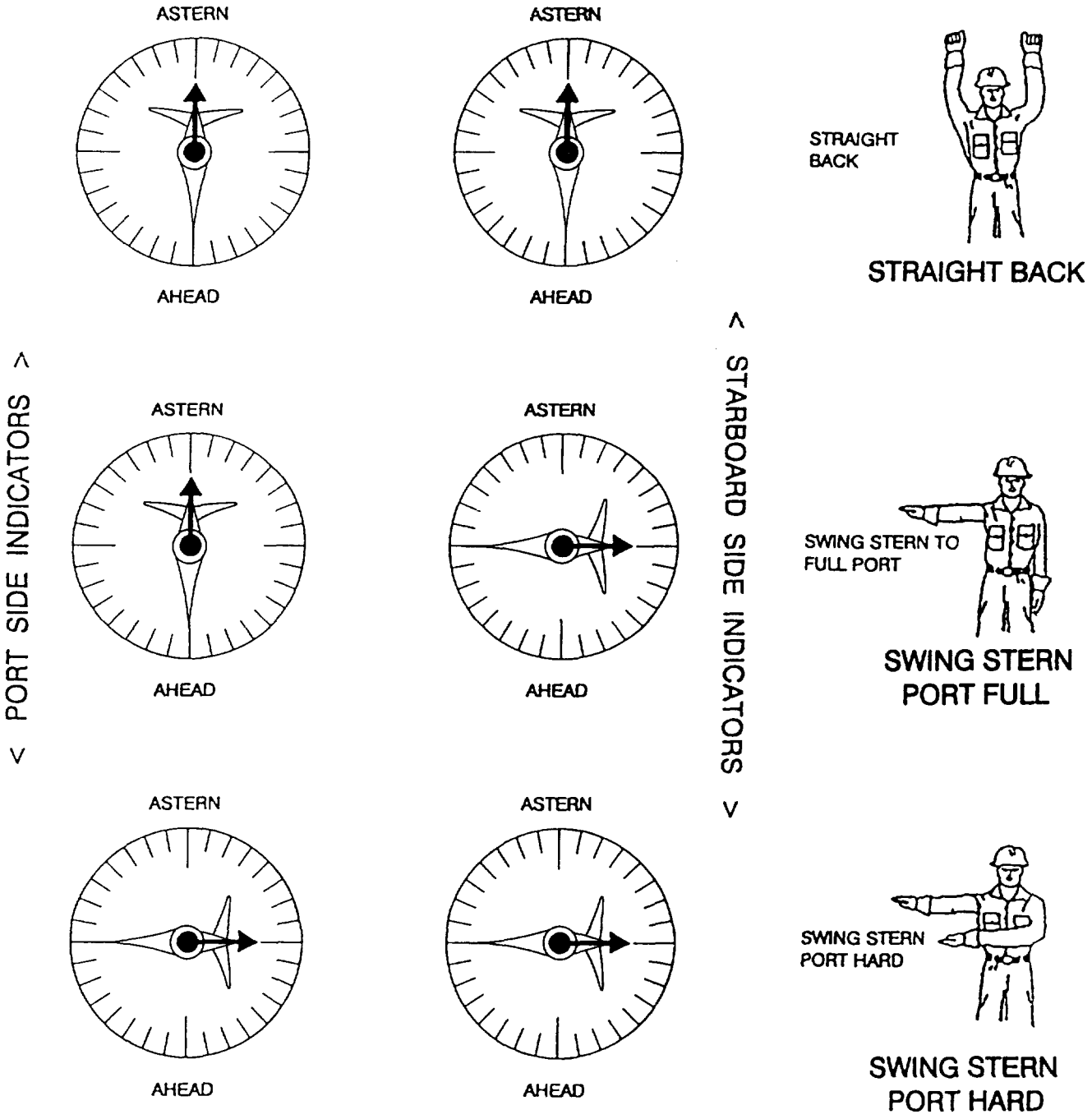

Figure 2-54. Operator MCF Maneuver Controls, Indicators, and Signals (Sheet 3 of 5).

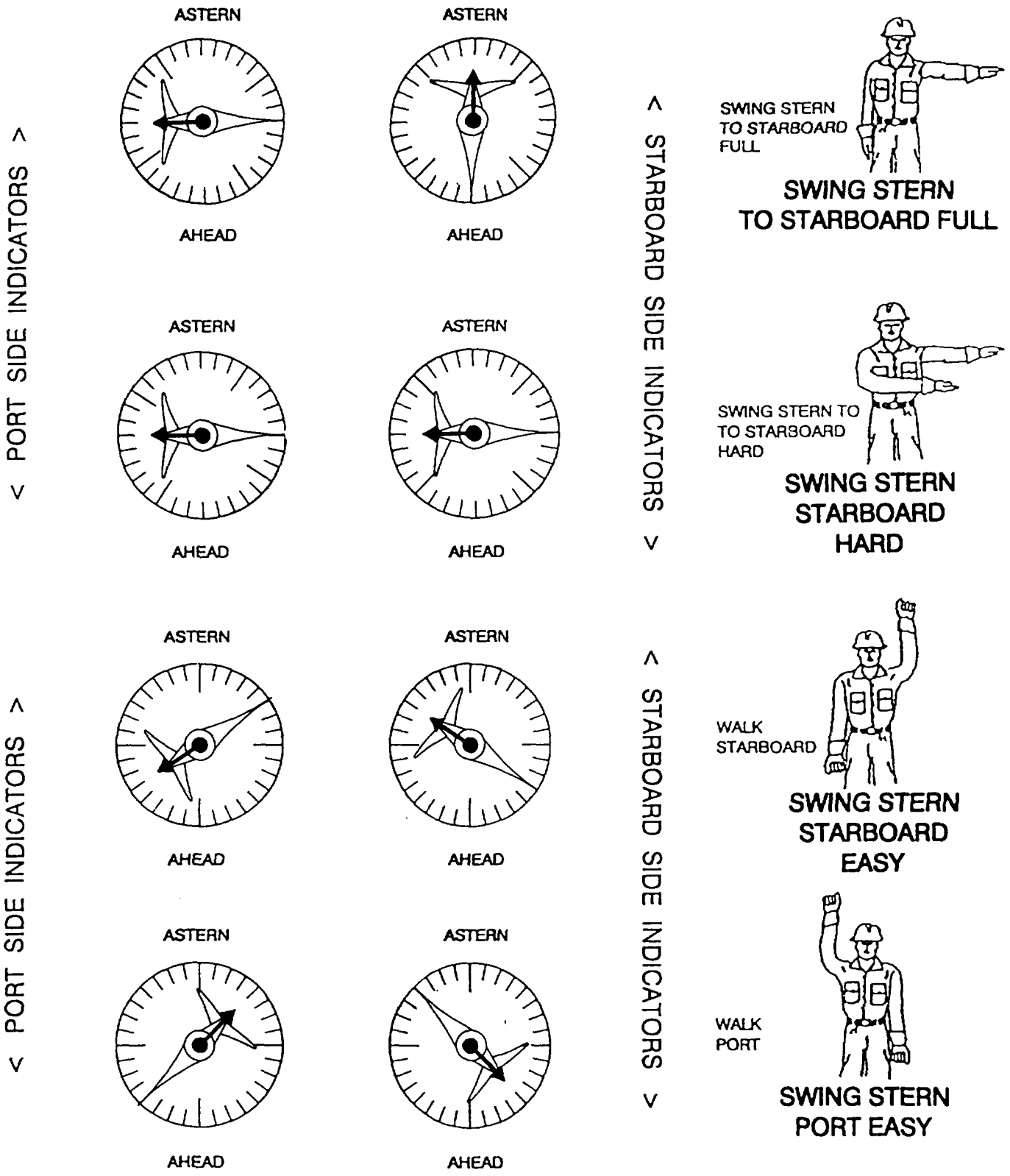

Figure 2-54. Operator MCF Maneuver Controls, Indicators, and Signals (Sheet 4 of 5).

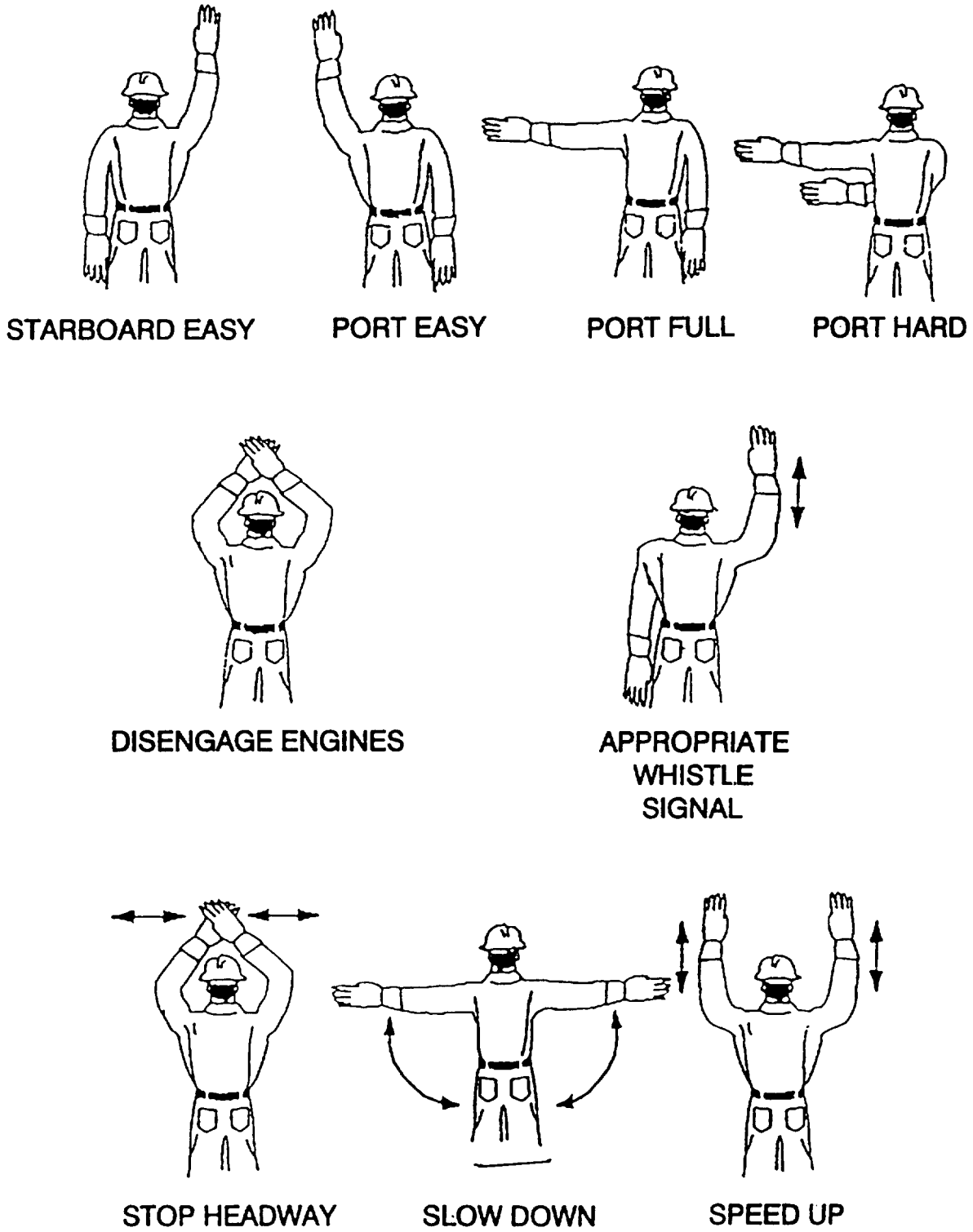

Figure 2-54. Operator MCF Maneuver Controls, Indicators, and Signals (Sheet 5 of 5).

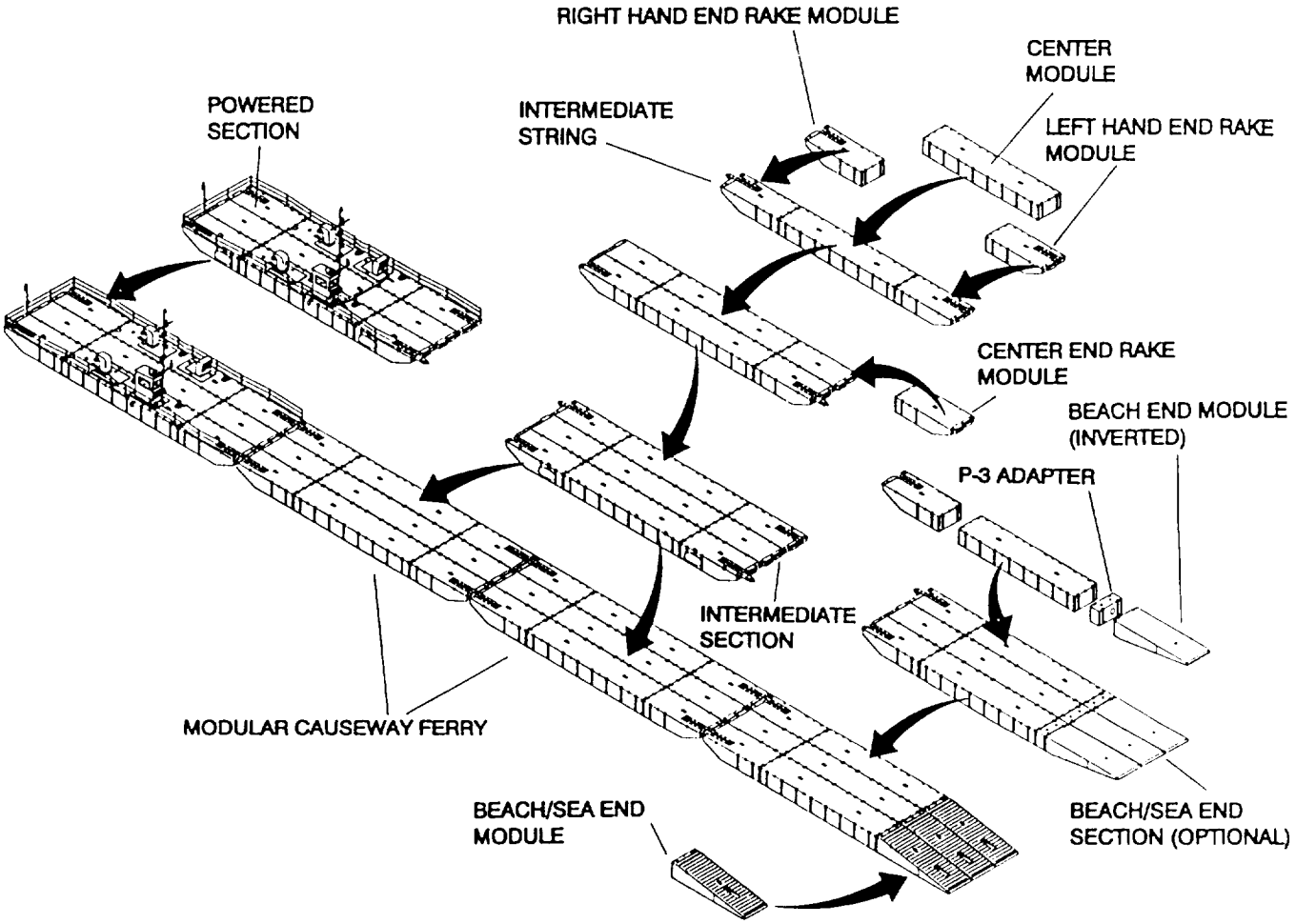

Figure 2-55. Building an MCF with Modules, Strings, and Sections.

2-12 OPERATING MCF AUXILIARY EQUIPMENT . The MCF auxiliary equipment bilge pumps, communication equipment, fire suppression system, ventilation system, and accessories can all be controlled from the Operator's Cab (Figures 2-2, 2-3, 2-5, 2-6 and Tables 2-1, 2-2, 2-4, 2-6).

2-13 PREPARATION FOR SHORT-TERM STORAGE AND SHIPMENT . The MCF is shipped in kit form by section. One MCF kit consists of one Beach/Sea End Section Assembly, two Intermediate Section Assemblies and one Powered Section Assembly. The following paragraphs described the procedures necessary to prepare the MCF for shipment and short-term (30 days or less) storage.

2-13.1 Propulsion Module Preservation. The following preservation procedures must be performed prior to packing for shipment.

a. Drain the engine crankcase IAW LO 55-1945-205-12.

b. Fill the crankcase to the proper level IAW LO 55-1945-205-12.

c. Fill the fuel tank IAW LO 55-1945-205-12. Operate the engine for two minutes at 1200 rpm and no load.

NOTE

Do not drain the fuel system or the crankcase after this run.

d. Check the air cleaners and service as necessary (Item 20 of the PMCS).

e. Add anti-freeze IAW Item 18 of PMCS.

f. Clean entire exterior of engine (except electrical system) with fuel oil and dry it with compressed air. All rust or corrosion must be removed from any exposed part.

g. If unit will be stored for less than 30 days, proceed to seal engine openings with a waterproof, vapor proof material that is strong enough to resist puncture and damage from the expansion of entrapped air.

   Report this completion of preparation for short term storage to next higher level maintenance. If unit is to be stored for longer than 30 days, report action to next higher level maintenance for further preservation maintenance.

2-13.2 Propulsion Module Preparation for Shipment. After completion of preservation, the following procedures must be accomplished to ensure equipment is secure for shipment.

a. Ensure propulsion has been preserved IAW paragraph 2-13.1 and all necessary requirements of the next higher level maintenance as required if shipment and storage will be for longer than 30 days.

   Disconnect cable control heads from fire suppression system CO_2 cylinders in lazaret. Rotate control head upward and secure to overhead piping. Install a red tag to reconnect cable control head prior to operation.

b. Remove lever control head and flex hose from fire suppression system CO_2 cylinder and screw shipping cap back onto cylinders. Install a red tag to reconnect lever control head prior to operation.

c. Disconnect battery cables B4 and B5 prior to shipment. Tag and secure cables in module. Install a red tag on the batteries to reconnect cables B4 and B5 prior to operation.

d. Close butterfly valve at the sea chest.

e. Attach a red tag to diesel engine raw water pump with warning to make sure raw water pump impeller is removed if engine is to be started with the module out of the water and the raw water system deactivated. Pump must be primed prior to start-up.

f. Ensure all breakers on the main circuit breaker panel in the propulsion module are in the OFF position.

g. Remove the two emergency battle lanterns from the propulsion module. The batteries should be removed from the lanterns. Package and mark lanterns and batteries with other loose items.

h. Ensure hatches are securely locked.

2-13.3 Operator Cab and Plenum Preparation for Shipment. Perform the following procedures to prepare the operator cab and plenums for shipment.

a. Coat cab door seal with MIL-C-21567 silicone compound.

b. Remove windshield wiper blade from wiper assembly, wrap, label and store inside the operators cab prior to packing the cab.

c. Remove the batteries from the emergency battle lantern in the cab. Batteries should be wrapped, labeled and stored in the operator's cab prior to packaging cab.

d. Disconnect and remove the following items from the operator cab prior to shipment:

1) Spotlight

2) Sincgars Antenna

3) Navigation Bell

4) Antenna

5) Navigation Horn

e. Apply a film of grease (MIL-G-81322) to the air intake louver door hinges on the cab and intake plenum.

f. The exhaust plenum opening shall be sealed with barrier wrap or suitable material.

2-13.4 Mast/Stub Mast Assembly Preparation for Shipment. Perform the following procedures to prepare the mast/stub mast assembly for shipment.

a. Remove all the light bulbs from the mast and stub mast assembly lighting fixtures. Bulbs should be identified and packaged in a separate container to be secured inside the mast shipping container.

b. Disconnect electrical cable connectors at navigation lights terminal box and secure the two cables to the lower yardarms.

c. Disconnect bottom mast subassembly from upper mast subassembly by removing mounting hardware. Mounting hardware should remain with the upper mast subassembly during shipment.

2-13.5 Preparation for Movement. The following describes how the various components are to be shipped.

a. The 40' non-powered pontoons, 20' raked pontoons, 40' propulsion module and beach/sea end modules are shipped self-contained. All remaining components will be shipped in ISO containers or on skids identified for use with their intended assembly section. Components for each section will be shipped in wooden containers sequentially numbered for that section only.

b. Components for each section will be shipped in wooden containers, in accordance with PPP-B-601, sequentially numbered for that section only. The following is list of exceptions, these items will be shipped on wooden skids and banded for security.

1) Exhaust Plenum Assembly

2) Intake Plenum Assembly

3) Flexor Assembly

4) Anchor Assembly (less Buoy and Rope Assemblies)

5) Spreader

c. Refer to Table 2-21 for a complete component breakdown by section and numbering scheme.

Section IV. Operation Under Unusual Conditions.

2-14 UNUSUAL ENVIRONMENTIWEATHER.

WARNING

It is critical for SAFETY purposes to keep the engine hatch covers closed when engines are running, except when engine maintenance is being performed. Failure to do so can result in personal injury.

a. Extreme Heat:

1) Keep engine coolant at proper level.

2) Do not fill the fuel tank above full mark. Allow room for expansion of fuel.

3) Increase battery PMCS. Keep electrolytes to proper level.

4) Verify engine compartment fans are on to keep engine room compartment temperature for rising above 20 degrees ambient.

b. Extreme Cold:

CAUTION

Follow drainage procedures for raw water system as required in Daily PMCS during below freezing weather conditions 32° F. Failure to do so will result in severe damage to the system.

1) Follow drainage procedures for raw water system as required in Daily PMCS during below freezing weather conditions 32° F. Failure to do so will result in severe damage to the system.

2) Inspect water discharge outlets, connectors, deck, deck fittings, hatch latches and any other areas or components that may be operational or safety affected by ice build up.

3) Check bilge pumps frequently for operation, if necessary use hot air or hot water to thaw pumps.

4) Keep engine coolant mixture at proper mixture to prevent freeze up.

c. Salt Water:

1) Always keep hatch covers closed.

2) If available, wash down engines and accessories with fresh water. Wipe dry the exteriors of engines and engine accessories after each operation.

3) Keep below deck compartments as dry as possible.

4) Check frequently for signs of corrosion. Corrosion is likely to occur where ever surfaces are exposed to salt water and air exposure. This includes lights, bilge pumps, fire extinguisher, electrical connections, wipe items frequently. Repair corroded areas as soon as possible.

d. Prolonged Idling of Engine.

CAUTION

Maintain at least 800-1000 rpm when prolonged idling is necessary. The engine coolant temperature may fall below the normal operating range during periods of prolonged idling. Failure to comply may result in incomplete combustion of fuel in a cold engine, causing crankcase dilution, formation of lacquer or gummy deposits on the valves, pistons, and rings, and rapid accumulation of sludge in the engine.

e. Operation with One Engine. If power is lost from one engine adjustments will have to be made in your steering procedures to allow for tendency of the boat to turn. Upon completion of mission return to shore and report your problem.

f. Loss of Power From Both Engines. If loss of power from both engines should occur deploy the anchor to avoid drifting and radio for emergency help.

g. Weather Conditions:

1) Do not embark on a mission when weather conditions create a Sea State condition of more than 2. Should a greater than Sea State 2 develops during a mission proceed with caution to a safer mooring.

2) Sea State Condition 2 is described as:

a) Average wave height in (feet) of 1.4

b) Significant wave height in (feet) of 2.2

c) Wind speed in (knots) of 12

2-15 EMERGENCY PROCEDURES.

2-15.1 Emergency Shutdown of the Engine.

CAUTION

Emergency shutdown should be used only when the engine does not respond to the normal stopping procedure. Use of emergency shutdown can cause lubricating oil to be sucked past the oil seals and into the blower housing and/or cause damage to the turbocharger.

a. Press the EMERgency STOP button.

CAUTION

To ensure positive closure should another emergency shutdown be required, the shutdown must be checked and required repairs or adjustments made. Failure to comply may permit engine run-on when the emergency shutdown is activated.

b. After the emergency shutdown, check for engine damage and proper operation before the vessel is returned to service.

c. Reset the air shutdown, located in the air inlet housing.

WARNING

It is critical for SAFETY purposes to keep the engine hatch covers closed when engines are running, except when engine maintenance is being performed. Failure to do so can result in personal injury.

2-15.2 Fire Aboard the Vessel. In case of fire, activate the fire suppression system and/or use the hand operated fire extinguisher.

2-15.3 Emergency Steering. The following procedures, in conjunction with Figure 2-56, describe proper installation procedures for the Emergency Steering System. Once installed, turn crank handle clockwise (CW) to steer to the left and counterclockwise (CCW) to steer right. Operator in cab will observe dial indicator as needle points in direction of thrust.

a. Remove emergency steering unit from the lazaret compartment (forward machinery hatch of propulsion module).

b. Remove emergency steering hatch cover (1) on propulsion module Pump-Jet/Thruster hatch (2) located aft of the exhaust plenum (3).

c. Remove three flat head screws (4) from the from Pump-Jet/Thruster hatch (2).

d. Set support (5) on Pump-Jet/Thruster hatch (2) and reinstall three flat head screws (4) through the slotted holes in the support (5). Do not tighten.

e. Install drive shaft (6) on hydraulic steering motor (7) shaft. The shaft has a 1.81 12 point socket which fits over the 1-1 /2 square head located on the top of the steering motor. Note direction in which PumpJet/Thruster (8) is pointing and line up the keyway in the drive shaft (6) to point in the same direction.

f. Check steering assembly for proper vertical alignment of the drive shaft to assure binding will not occur when 8 the unit is being operated.

g. After alignment is checked and found satisfactory, tighten all mounting hardware from previous steps.

CAUTION

Do not attempt to operate steering hydraulically with needle valve closed and emergency steering shaft connected. Serious damage to gearbox, shaft, or motor may result.

h. Open emergency steering needle valve (9) in the hydraulic lines to the hydraulic steering motor (8).

i. Turn 3/2 way valve (10).

j. Release brake with hand pump (11).

k. Operate the emergency steering by rotating the hand crank. Rotating hand crank counter-clockwise (CCW) moves the nozzle (and MCF) to the right, and rotating the hand crank clockwise (CW) moves the nozzle (and MCF) to the left. Operator in cab will observe dial indicator as needle points in direction of thrust.

WARNING

When connecting NATO plug with mating receptacle, ensure positive terminal on plug does not come in contact with human body or ground. Failure to comply may result in death.

2-15.4 NATO Receptacle. A NATO receptacle is provided in the event a propulsion module's batteries must be jumpered by another NATO vessel. Use in accordance with standard Army operating procedures.

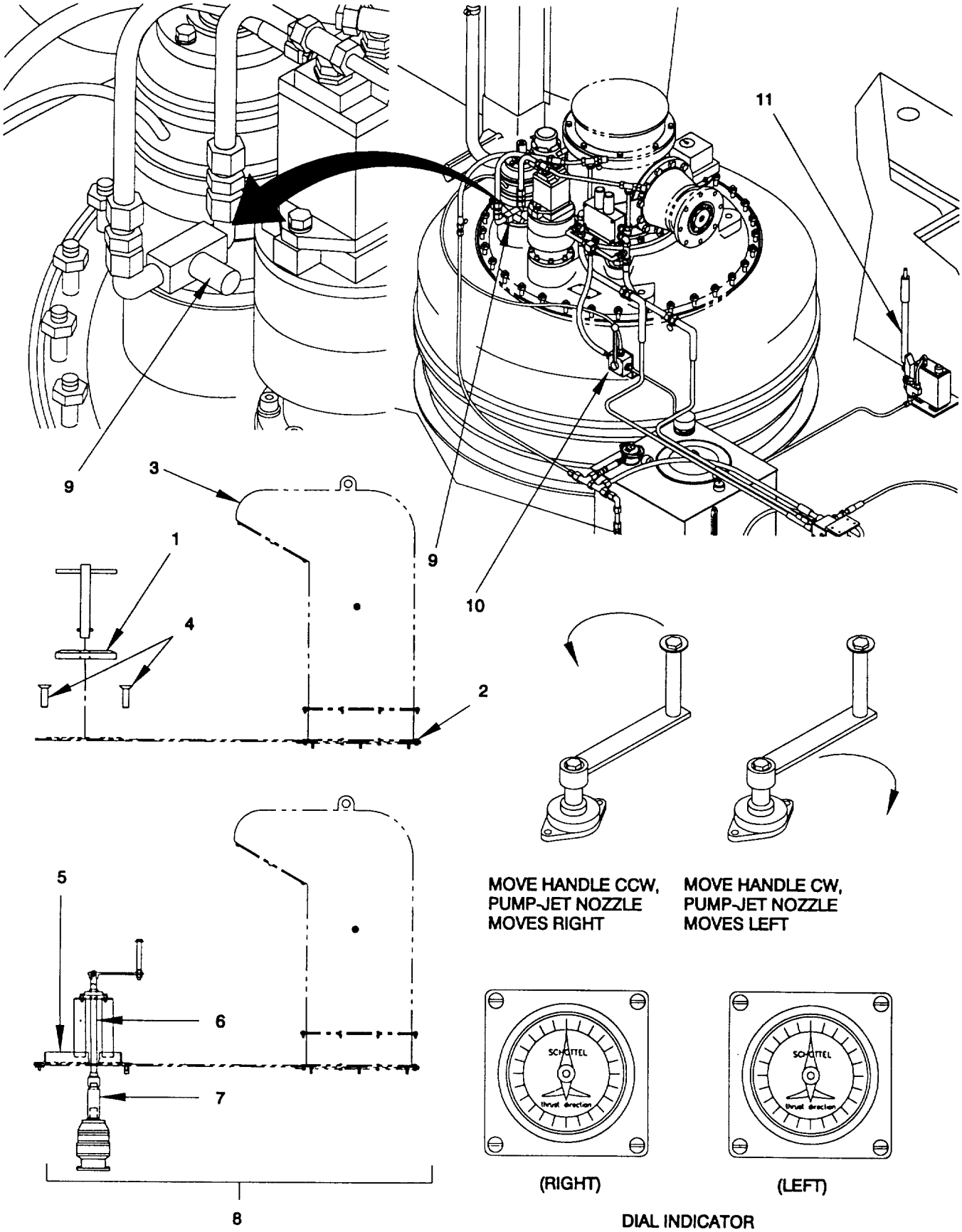

Figure 2-56. Emergency Steering Installation and Procedures.

2-16 NUCLEAR, BIOLOGICAL, AND CHEMICAL (NBC) DECONTAMINATION PROCEDURES. Interim general NBC decontamination procedures will be performed until NBC decontamination facility can be provided.

2-17 JAMMING AND ELECTRONIC COUNTERMEASURES (ECM). As applicable, instructions will be included for the operation of the MCF in an ECM environment through transmitted and reflected deception signals and transmitted and reflected jamming.

Section V. MCF Functional Checks.

2-18 OPERATOR PROCEDURES

a. Operator verifies that the Operator/Crew Preventive Maintenance Checks and Services (PMCS) checklist (Table 2-20) has been completed and signed off.

b. After the Operator/Crew Preventive Maintenance Checks and Services (PMCS) checklist has been completed and before starting engines, check to be sure no one is in any compartments and all access hatches/scuttles are closed and dogged.

c. Operator completes "Modular Causeway Ferry Operator Checklist" (Table 2-23) and refers to Figure 2-54 to assist in completing checklist.

CAUTION

During the starting and operating controls check, if any function does not perform properly, STOP the procedure, inspect and repair, if required, before continuing.

NOTE

These check off requirements shall be completed and signed by the personnel assigned to perform the tasks. The MCF shall not get underway until all items on this check list have been properly completed.

CHAPTER 3

MAINTENANCE INSTRUCTIONS

Section I	Lubrication/Maintenance Instructions	3-2
3-1	Introduction	3-2
3-2	General Maintenance Functions	3-2
3-2.1	Visual Inspection	3-2
3-2.2	Preventive Maintenance	3-2
3-2.3	MCF Module Integrity Testing	3-5
3-2.4	Deck Fittings	3-5
3-2.5	Ropes/Lines	3-5
Section II	Troubleshooting Procedures	3-7
3-3	Introduction	3-7
Section III	Operators Maintenance Procedures	3-37
3-4	Introduction	3-37
3-5	Operators Responsibility	3-37
Section IV	Packing and Lifting	3-38
3-6	Stowage	3-38
3-6.1	Building an ISOPAK	3-39
3-6.2	Interim Stacking	3-41
3-6.3	Lifting End Rakes	3-42
3-6.4	Lifting Center Modules	3-43
3-6.5	Lifting the MCF Section	3-44
3-6.6	Lifting the ISOPAK	3-45
3-6.7	MCF Weight and Capacity	3-46

Section I. Lubrication/Maintenance Instructions.

3-1 INTRODUCTION Lubrication instructions are found in Lubrication Order (LO) 55-1945-205-12 (Provided as Appendix F of this manual). All lubrication instructions are mandatory.

3-2 GENERAL MAINTENANCE FUNCTIONS General Maintenance consists of the following tasks:

a. Visual Inspection.

b. Preventive Maintenance.

c. MCF Module Integrity Testing.

d. Deck Fittings.

e. Ropes/Lines.

3-2.1 Visual Inspection. Prior to and after operational use, the MCF shall be visually inspected as follows:

a. Inspect for any rust or corrosion spots.

b. Check for dents or structural damage.

c. Inventory all deck fittings and accessories.

d. Ensure connector parts are not missing.

e. Inspect all ropes/lines for fraying, extensive wear, cuts or deterioration.

f. Inspect deck non-skid coating for deterioration.

Discrepancies found shall be reported and corrected as the situation warrants. Replace deteriorated parts or components.

3-2.2 Preventive Maintenance. Preventive maintenance consists of preserving the MCF surface by periodic cleaning and painting in order to protect the underlying structure.

CAUTION

All safety precautions outlined in front of this manual shall be followed at all times.

NOTE

No repairs are made below the water line while the vessel is in the water. Repairs are made while the damaged section is beached.

a. Cleaning and Surface Preparation. Cleaning and preparation of the MCF painted surfaces include the removal of old paint, marine growth, contaminants, corrosion and dirt. Personnel working on surface preparation shall wear protective clothing, eye and hearing protective devices. Post warning signs around noise hazard areas. Reference TB 43-0144 for applicable procedures.

b. Prepare the MCF surface as follows:

1) Remove oil or grease off the surface before using power tools (needle gun) or abrasive blasting.

2) Rinse all surfaces with fresh water before scraping or blasting. This will remove dirt and dissolved contaminants.

WARNING

Most surface preparation methods generate noise levels in excess of 85 dB. Always wear hearing protection.

Goggles, face shields and gloves must be worn before using power tools to protect against flying particles. Do not use power tools in the vicinity of flammable materials or combustible gases.

3) Using Power Tools (Grinder or Needle gun), remove old paint or rust down to the bare metal surface.

4) When the old paint on the surface is in good condition, roughen the surface with an abrasive tool and a hydro blast. Let the surface dry before applying any paint.

5) Steel surfaces should be cleaned to a near-white condition.

6) For deck fittings and small areas, a wire brush can be used to clean the surface.

c. Painting. Reference TB 43-0144 for applicable procedures.

d. Connector Maintenance. The following minor maintenance is required to ensure smooth operation of connector assemblies:

1) Deployment Spring Lubrication. Push up on retainer on the underside of the pin. This action will release the pin from the male connector assembly housing. Remove connector pin to expose the deployment spring. Remove spring and inspect spring for cracks or cuts (replace as necessary). Lubricate spring using a light coat of lubriplate #1200-2 waterproof grease or equivalent IAW (MIL-G-27617). Deployment spring lubrication should be accomplished periodically, and both before and after use.

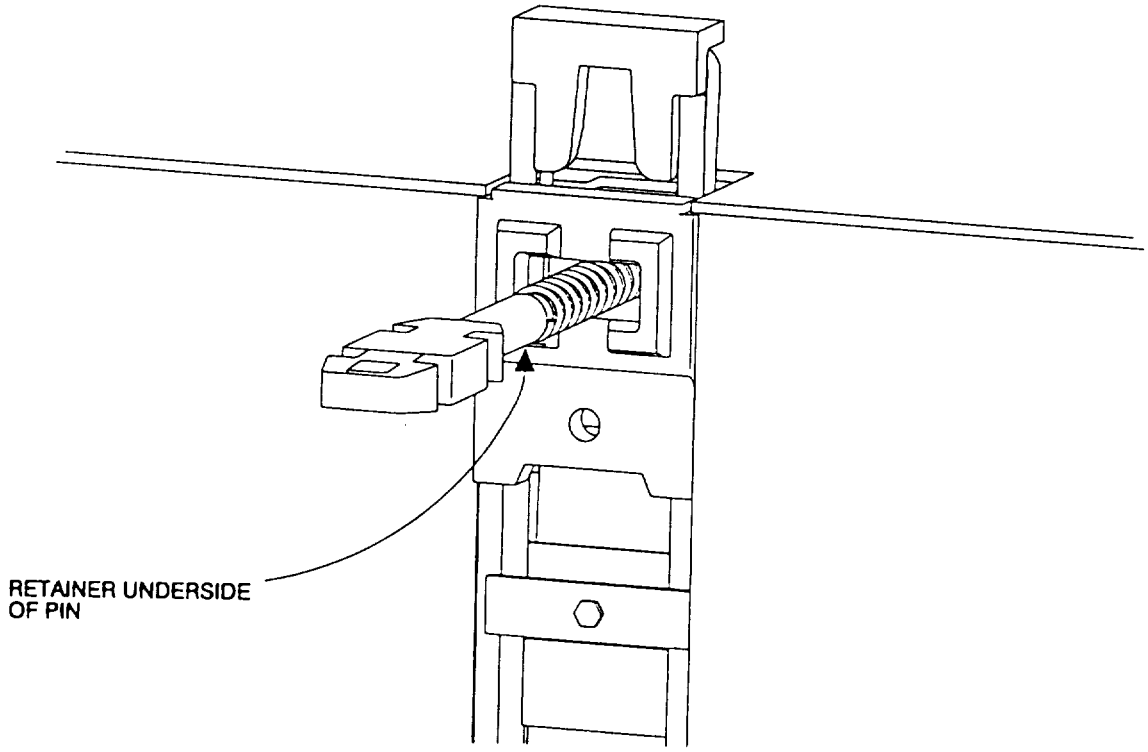

Figure 3-1. Removing Connector Pins.

2) Friction Plate Adjustment. Friction Plates apply a force against the guillotine bars, holding them in the up position when raised with pry bars. The friction may be adjusted as necessary by adjusting tightness of the bolt located at each connector location using two standard wrenches, as shown in (Figure 3-2). One standard wrench is used to hold the nut of the friction plate while the other wrench loosens or tightens the assembly.

NOTE

Do not over tighten friction plate. This will make guillotine bar operation difficult.

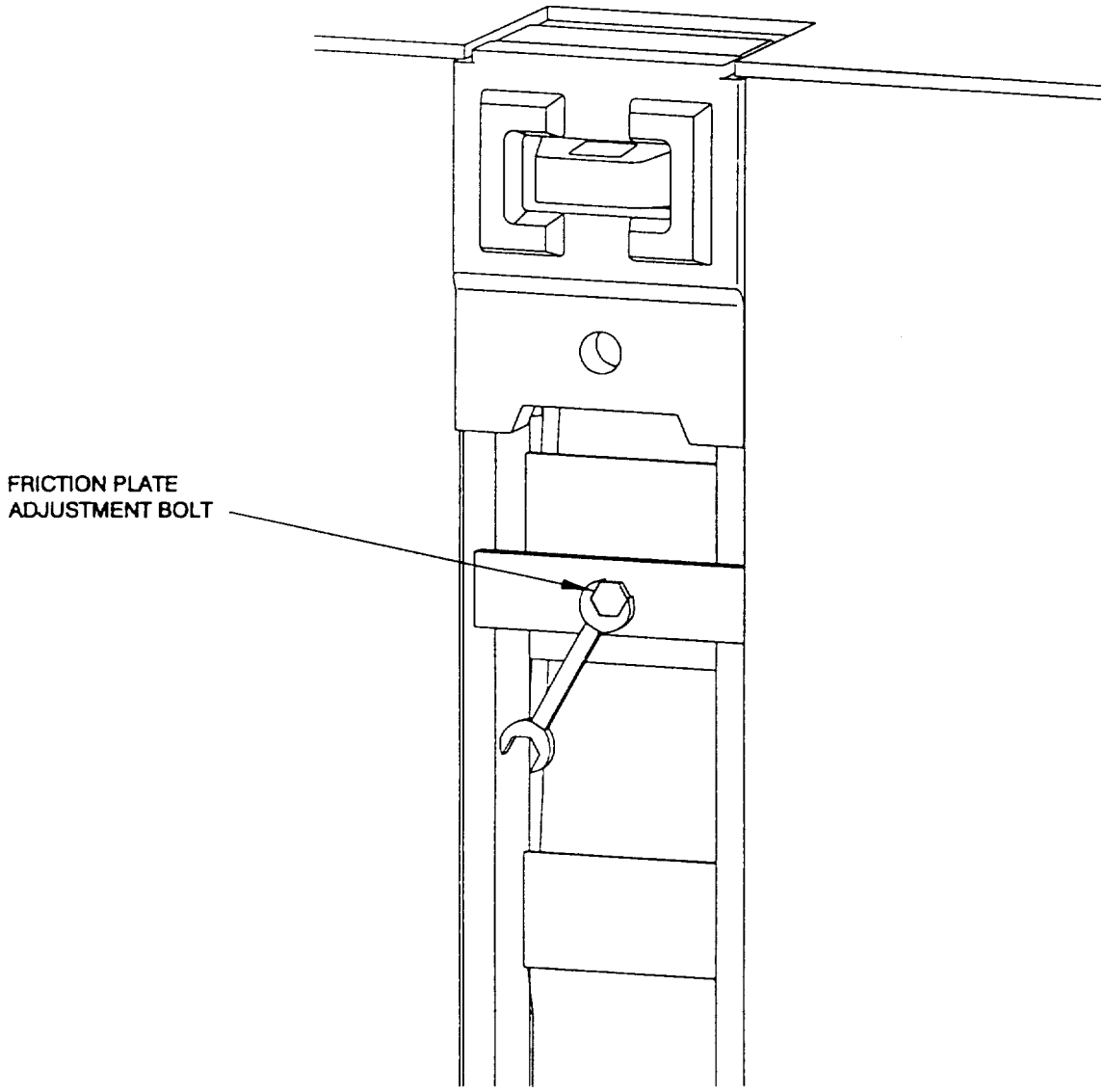

Figure 3-2. Friction Plate Adjustment.

3-2.3 MCF Module Integrity Testing. Each module must be tested for water-tight-integrity after each operation and before assembly of modules while in drydock or shipboard. Reference the Technical Manual TM 55-1945-205-241 for detailed procedures.

WARNING

Do not operate air compressor without first observing all safety warnings and carefully reading the operating and maintenance manual. Wear eye protection while operating compressed air unit. Failure to comply may cause serious injury to personnel.

An air pressure regulating valve and a low pressure gauge must be used when pressuring modules. Do Not exceed 2-3 psi. Higher pressures may cause explosion. Failure to comply may cause serious injury or death to personnel.

NOTE

Modules with water in them will prevent interconnection and/or "flexing-in" of two or more modules.

a. Before assembling MCF strings, perform procedures as specified in the Technical Manual TM 55-1945-20524-1, Chapter 2, Unit Maintenance.

b. If leakage found, notify next higher level of maintenance to weld seams.

3-2.4 Deck Fittings. Deck fittings should be removed and inspected monthly or prior to use and before stowage.

a. Remove deck fittings by loosening with adjustable wrench and remove bolt, washer, deck fitting and nut as shown in (Figure 3-3).

b. Service deck fittings by inspecting for cracks or rust spots, preserve the surface of deck fitting and tube turn as necessary.

c. Repair of deck fittings and hardware is by replacement.

WARNING

Maximum rope size to be used with deck fittings is 1 1/16" diameter nylon or any other type rope with a breaking strength of less than 30,000 lbs. Using rope of more than 30,000 lbs. breaking strength will result in the deck hardware failing before the rope. Failure to comply may result in serious injury or death to personnel.

3-2.5 Ropes/Lines. Ropes should be inspected monthly or prior to use and before stowage. If ropes are frayed or deemed unsuitable they should be replaced.

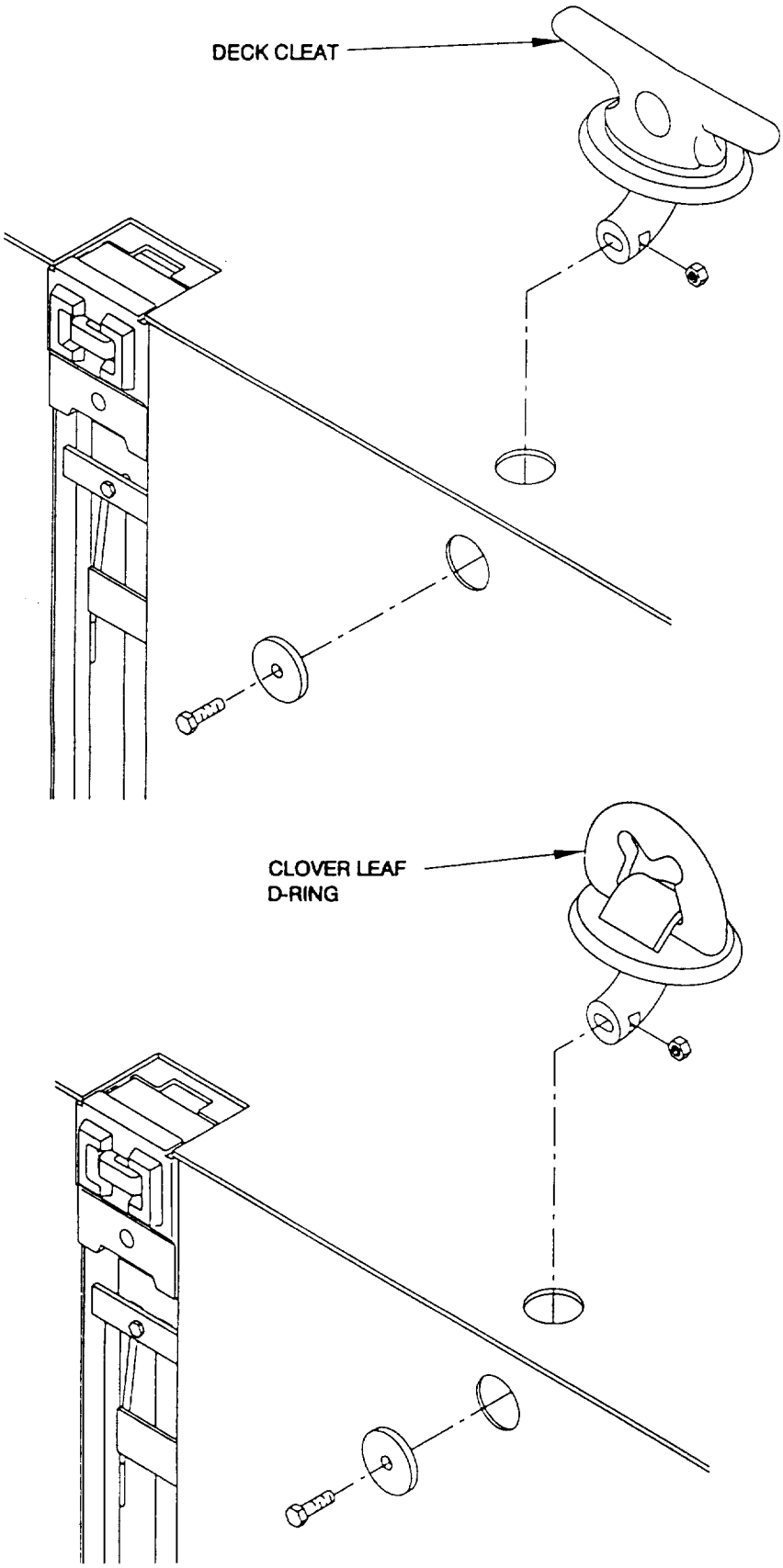

Figure 3-3. Removal of Deck Fittings.

Section II. Troubleshooting Procedures.

3-3 INTRODUCTION.

Table 3-1 lists common malfunctions that the operator may find with the MCF. Perform the tests, inspections, corrective actions in the order in which they appear in the table. Table 3-1 cannot list all the malfunctions that may occur, all the tests and inspections needed to find the fault, or all the corrective actions needed to correct the fault. If the equipment malfunction is not listed or actions listed do not correct the fault, notify your supervisor.

Malfunction Index

Description	Page Number
Operator Cab	
No Power to Control Panels in Operator's Cab	3-8
Cab Accessories	
Cab Accessories Do Not Function.	3-8
Diesel Engine	
Sudden Loss of Power (No Black Smoke)	3-10
Sudden Loss of Power (Heavy Black Smoke)	3-10
Engine Turns Over But Will Not Start.	3-12
Engine Fails to Start, Starts with Difficulty and Runs Badly	3-14
Engine Will Not Turn over.	3-14
Engine Starts with Difficulty and Runs Rough .	3-16
Marine Gear Clutch Will Not Engage in Engage/Backflush Directions	3-18
Hydraulic System	
No Hydraulic Pressure	3-20
Audible Alarms	
Low Engine Oil Pressure (Engine Audible Alarm and Warning Light Will Come On) (Normal Operation)	3-20
Overheating (Engine Audible Alarms and Warning Light Will Comes On)	3-22
Engine Audible Alarm Comes on (Normal Operation)	3-22
Mast Light Audible Pulse Beeper Sounds	3-25
Ammeter	
Ammeter Indicates Discharging of System	3-27
Pump-Jet/Thruster	
No Propulsion from Pump Jet	3-29
Steering	
No Steering Control	3-31
No Steering Control Indication	3-31
Mast Lights	
Mast Light(s) Will Not Illuminate	3-34
Bilge Pumps	
Bilge Pump(s) Do Not Function	3-34

Table 3-1. Troubleshooting

MALFUNCTION TEST OR INSPECTION CORRECTIVE ACTION
1. NO POWER TO CONTROL PANELS IN OPERATOR'S CAB. -
Step 1. Main Circuit Breaker switch located in machinery compartment is in OFF position. Turn Main Circuit Breaker switch to ON position.
Step 2. Circuit Breaker-Operator's Cab located in main circuit breaker panel in machinery compartment is in OFF position. Turn Circuit Breaker-Operator's Cab to ON position.
Step 3. If all is working, but still no power, notify next higher level of maintenance.
2. CAB ACCESSORIES DO NOT FUNCTION.
Step 1. Main Circuit Breaker, located in machinery compartment, not in ON position. Turn Circuit Breaker to ON position.
Step 2. Circuit Breaker for cab electrical power in main circuit breaker panel, located in machinery compartment, not in ON position. Turn Circuit Breaker to ON position.
Step 3. Individual accessory Circuit Breakers located in operator's cab circuit breaker panel not in ON position. Turn all Circuit Breakers to ON position. Notify next higher level of maintenance.
Step 4. All circuits are functioning but accessories still do not function. Notify next higher level of maintenance.

Item 1

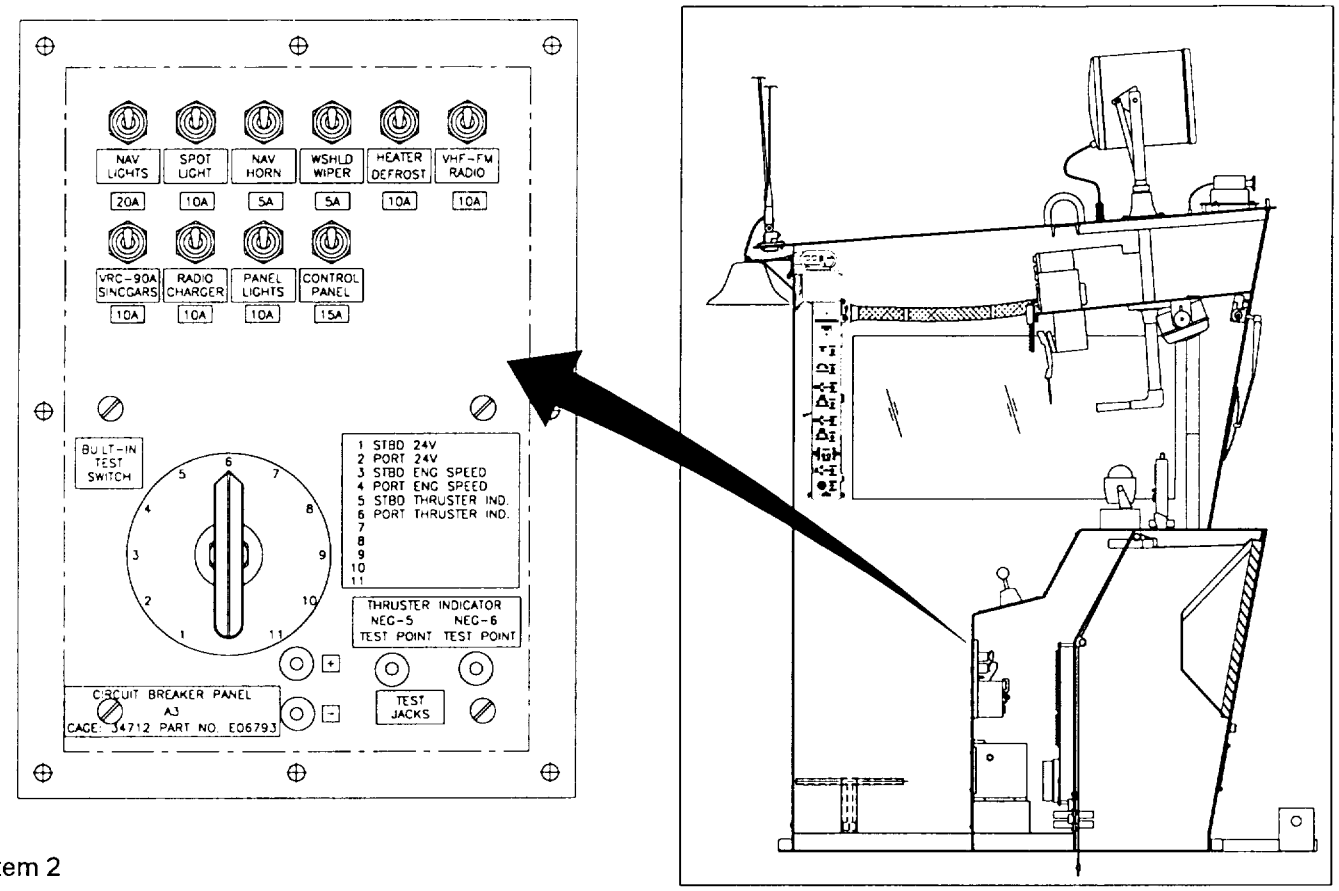
NAV LIGHTS
SPOT LIGHT
NAV HORN
WSHLD WIPER
HEATER DEFROST
VHF-FM RADIO
20A
10A
5A
5A
10A
10A
VRC-90A SINCGARS
RADIO CHARGER
PANEL LIGHTS
CONTROL PANEL
10A
10A
10A
15A
BUILT-IN TEST SWITCH
1 STBD 24V
2 PORT 24V
3 STBD ENG SPEED
4 PORT ENG SPEED
5 STBD THRUSTER IND.
6 PORT THRUSTER IND.
7
8
9
10
11
THRUSTER INDICATOR
NEG-5 TEST POINT
NEG-6 TEST POINT
TEST JACKS
CIRCUIT BREAKER PANEL
A3
CAGE 34712 PART NO. E06793

Item 2

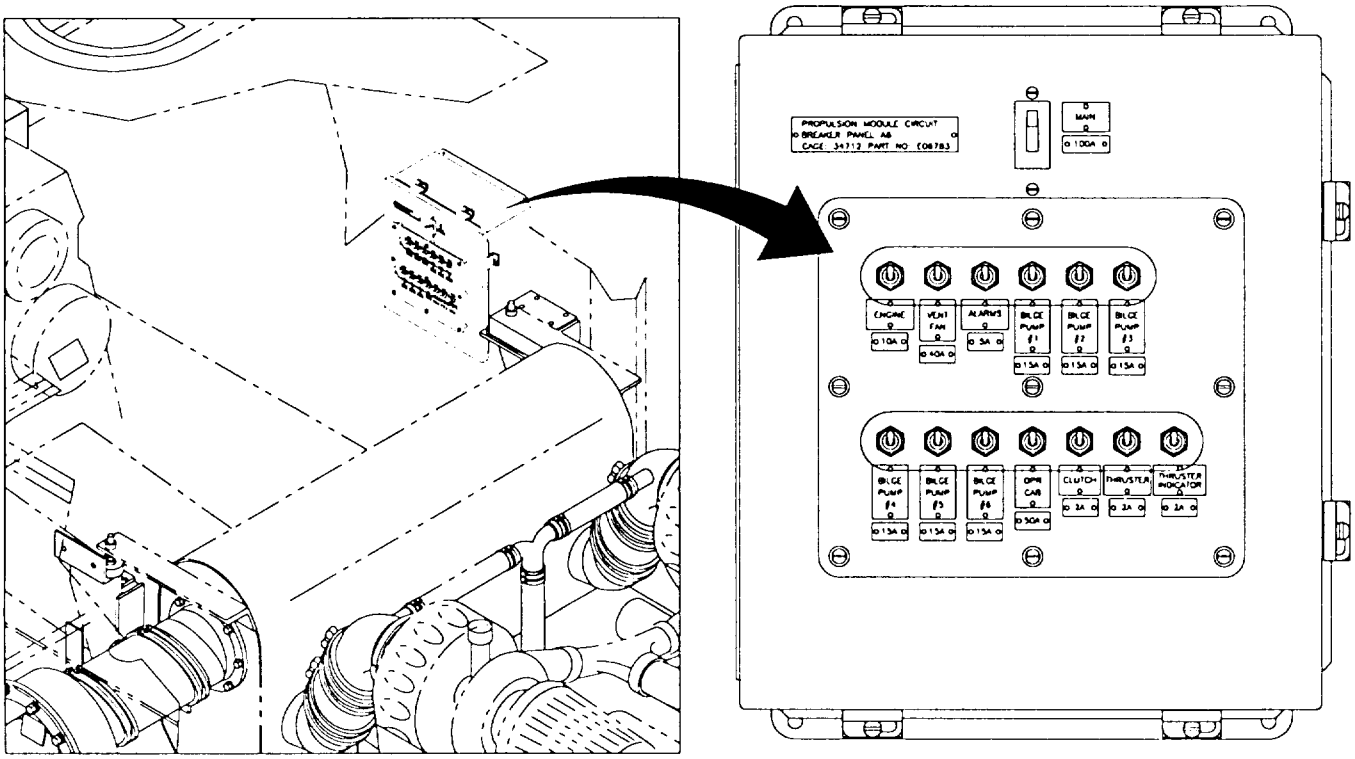
PROPULSION MODULE CIRCUIT
BREAKER PANEL A6
CAGE 34712 PART NO. E06783
MAIN
100A
ENGINE
VENT FAN
ALARMS
BILGE PUMP #1
BILGE PUMP #2
BILGE PUMP #3
10A
10A
5A
15A
15A
15A
BILGE PUMP #4
BILGE PUMP #5
BILGE PUMP #6
OPR CAB
CLUTCH
THRUSTER
THRUSTER INDICATOR
15A
15A
15A
50A
2A
2A
2A

Table 3-1. Troubleshooting - Continued

MALFUNCTION TEST OR INSPECTION CORRECTIVE ACTION
3. SUDDEN LOSS OF POWER (NO BLACK SMOKE)
Step 1. Check fuel water separator for water in fuel. Notify Unit Level maintenance.
Step 2. Check that all fuel valves are in OPEN position. Notify Unit Level maintenance.
Step 3. Check Fuel Filter for contamination. Notify Unit Level maintenance.
4. SUDDEN LOSS OF POWER (HEAVY BLACK SMOKE)
Step 1. Check air inlet for blockage. Remove blockage. Notify Unit Level maintenance.
Step 2. Check that Return Line Fuel Valve is open. Open Return Fuel Valve.
Step 3. Check Air Filter Restriction Indicators. Clean or replace Air Filters.

Item 3

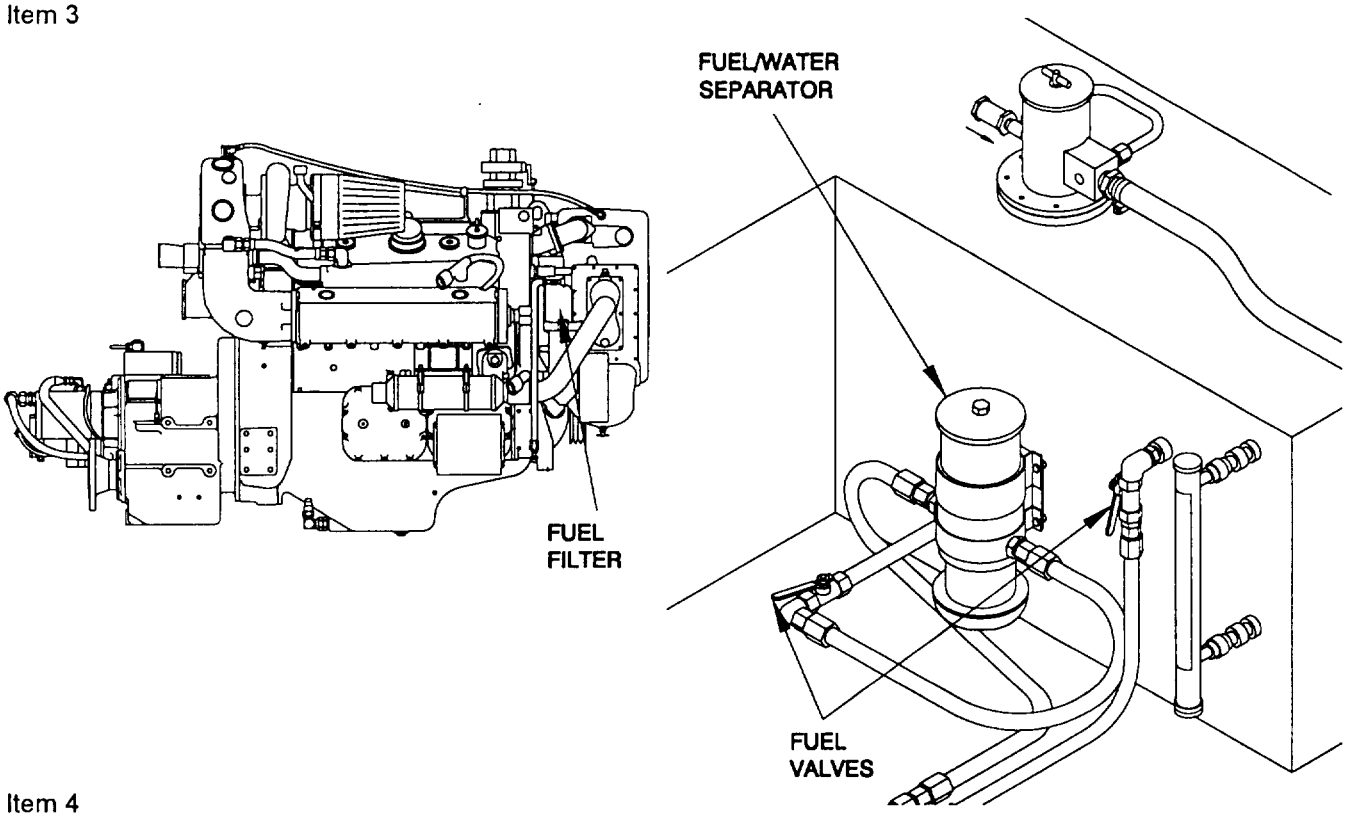

Item 4

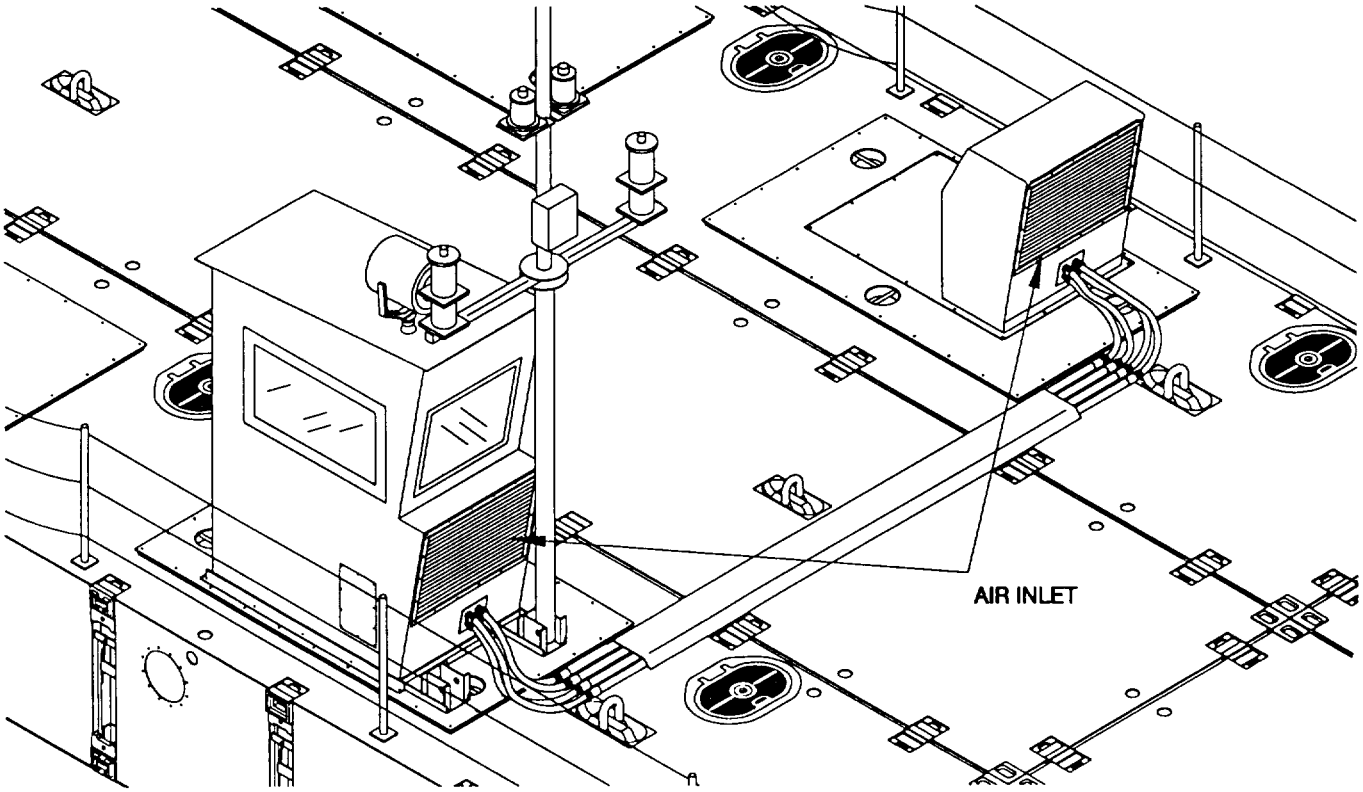

Table 3-1. Troubleshooting - Continued

MALFUNCTION TEST OR INSPECTION CORRECTIVE ACTION

5. ENGINE TURNS OVER BUT WILL NOT START.

Step 1. No fuel in tank.

Fill tank.

Step 2. Fuel has drained back and/or leaked out of supply lines.

Use priming pump to restore fuel.

Step 3. Severe cold weather conditions.

Cold Pac Starting Aid maybe out of ether. Notify Unit Level maintenance.

Step 4. Emergency Air Shutdown was activated.

Reset Emergency Air Shutdown Solenoid Valve. Notify next higher level of maintenance if unit does not start.

Step 5. Fuel shutoff valves closed.

Open fuel shutoff Valves.

Step 6. Water in fuel system.

Check Fuel Water Separator. Notify next higher level of maintenance if water present.

Step 7. Low cranking speed.

Make sure Marine Gear is engaged.

Low battery output. Notify next higher level of maintenance.

Loose starter connections. Tighten connections.

Faulty starter. Notify next higher level of maintenance.

Item 5

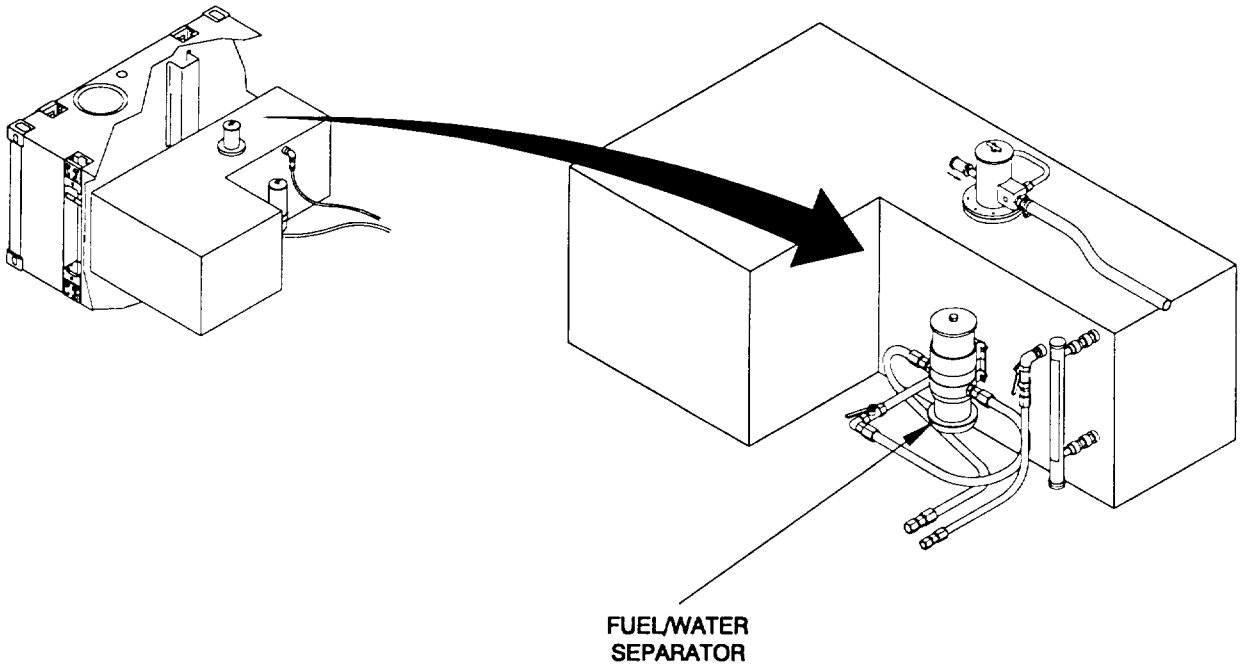
FUEL/WATER
SEPARATOR

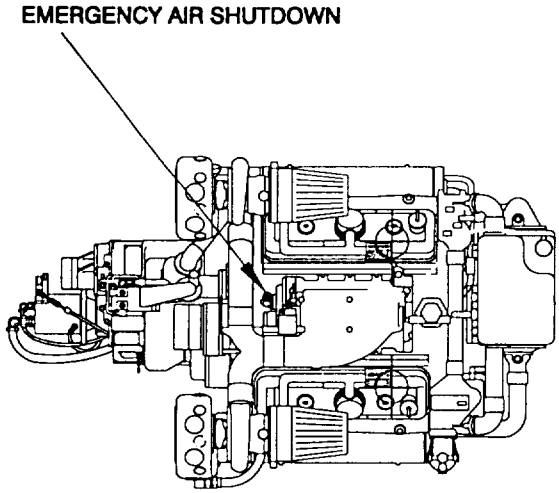
EMERGENCY AIR SHUTDOWN

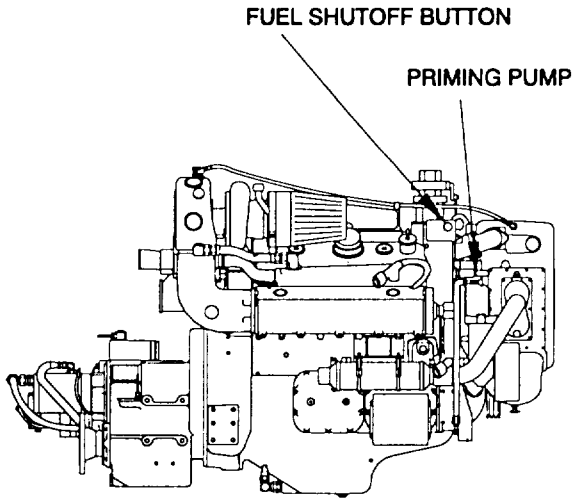
FUEL SHUTOFF BUTTON
PRIMING PUMP

Table 3-1. Troubleshooting -Continued

MALFUNCTION TEST OR INSPECTION CORRECTIVE ACTION

6. ENGINE FAILS TO START, STARTS WITH DIFFICULTY AND RUNS BADLY.

Step 1. Check to see that fuel valves are open.

Open valves by turning counterclockwise.

Step 2. Check to see if there is water in fuel water separator.

Notify next higher level of maintenance.

Step 3. Engine not getting enough air.

Check air cleaners and observe if red indicator is on. Notify next level of maintenance.

Check that the air flapper valve is open.

Notify next level of maintenance.

Step 4. Check for indication and/or load on ammeter.

When Engine Power switch is ON, check battery voltage at the Cab Circuit Breaker Panel (A3) (+) and (-) Test Jacks, with a voltmeter, to see if reading is below 24.0 VDC.

Notify next higher level of maintenance.

7. ENGINE WILL NOT TURN OVER.

Step 1. Electrical Power to start controls not on.

Refer to System/Malfunction No. 1.

Step 2. Clutch Switch on cab control panel is in engage/backflash position.

Return clutch switch to NEUTRAL Position. Reset it to engage it.

Step 3. No power from batteries.

Notify unit maintenance. Test batteries.

Check terminals and connections.

If batteries found to be dead or in weak condition, notify unit maintenance.

Step 4. Defective wiring.

Notify Unit Level maintenance.

Item 6

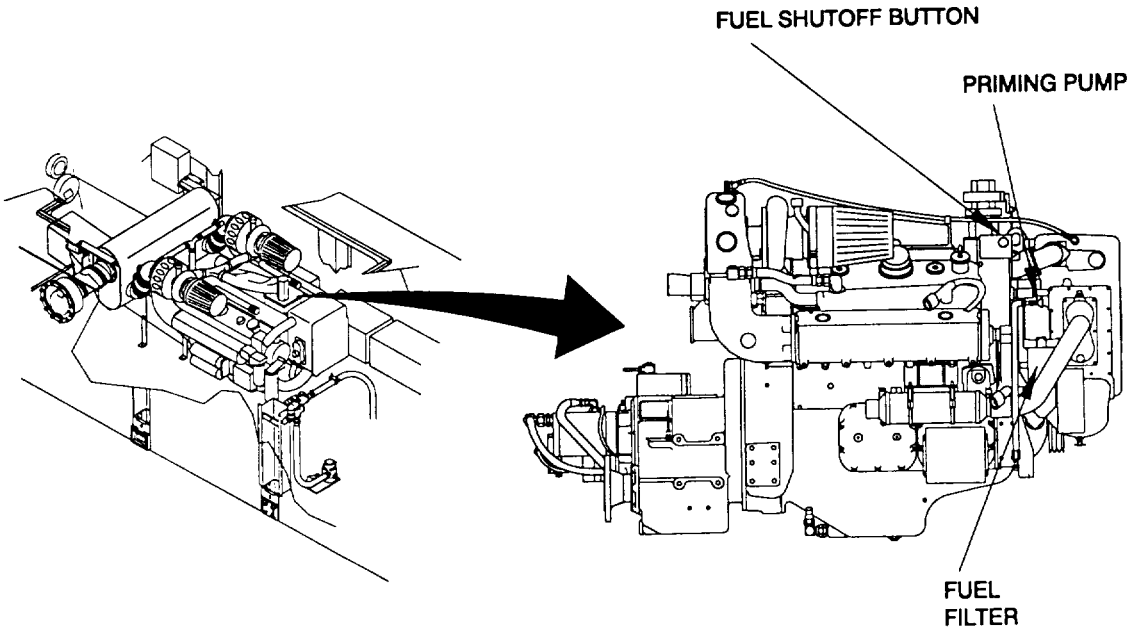

Item 7

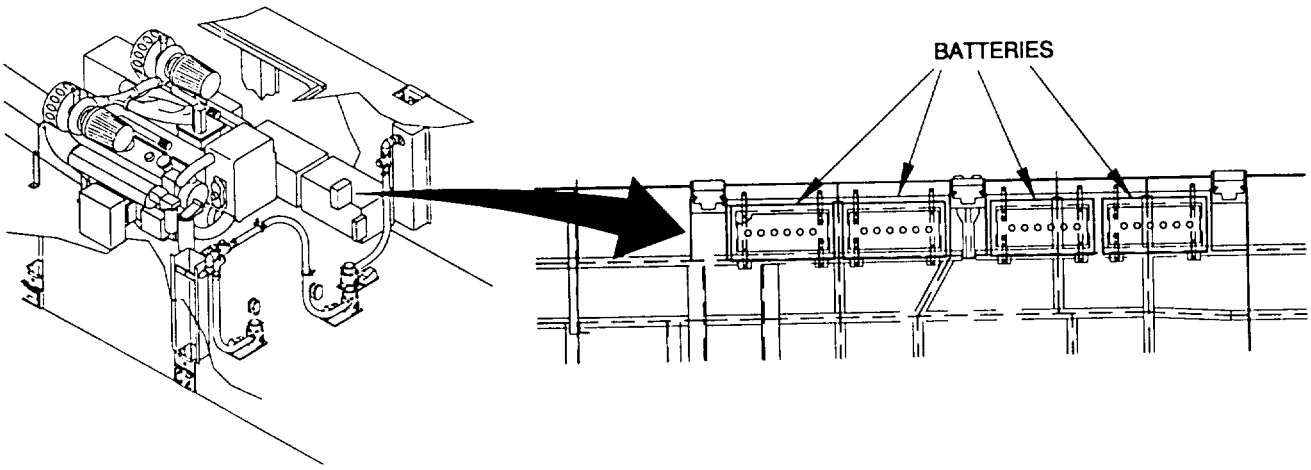

Table 3-1. Troubleshooting - Continued

MALFUNCTION TEST OR INSPECTION CORRECTIVE ACTION
8. ENGINE STARTS WITH DIFFICULTY AND RUNS ROUGH.
Step 1. Check to see that fuel valves are open.
Open valves by turning counterclockwise.
Step 2. Check to see if there is water in fuel water separator.
If water present, change out and/or clean water separator drain.

Item 8

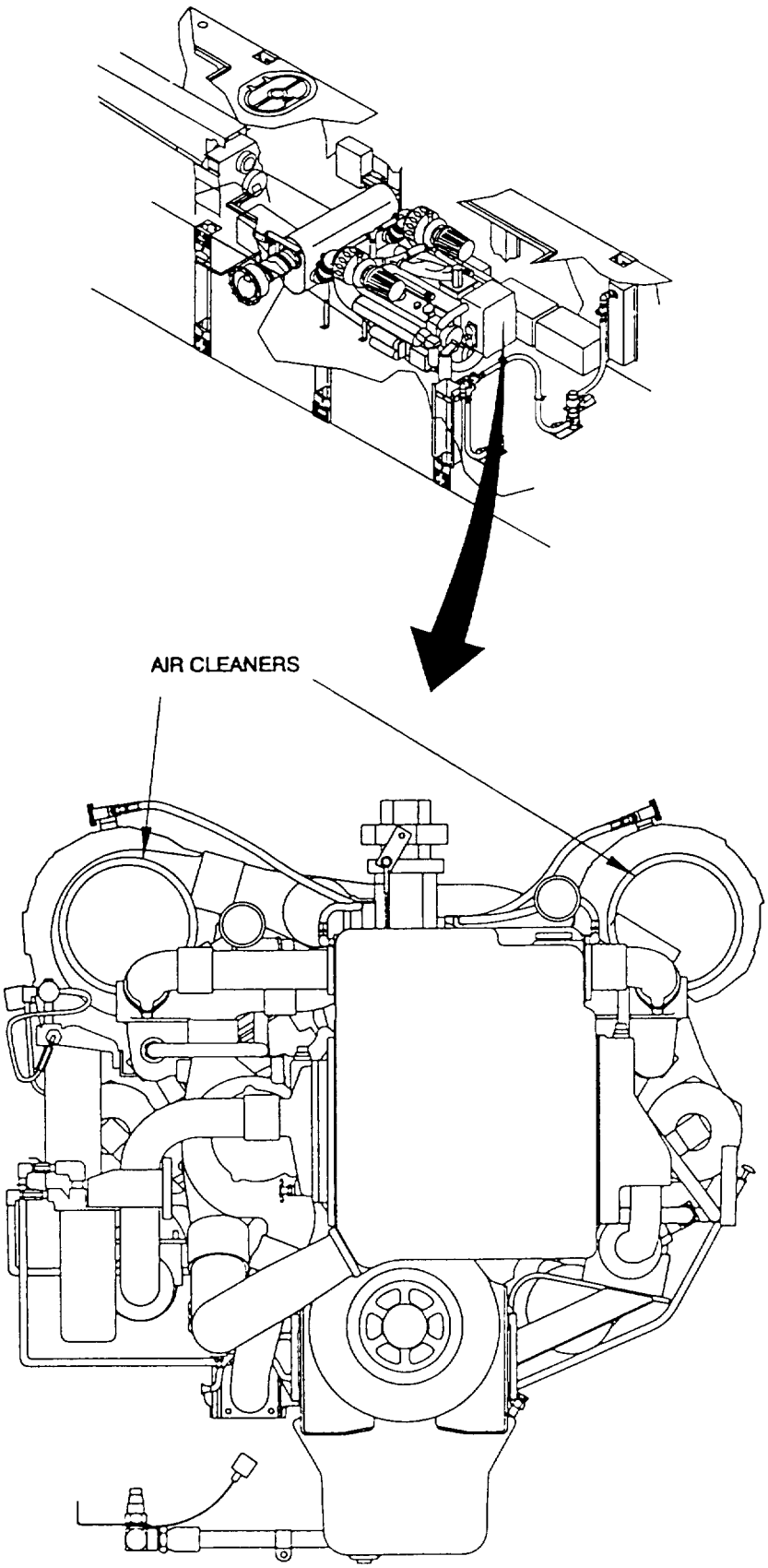

Table 3-1. Troubleshooting - Continued

MALFUNCTION TEST OR INSPECTION CORRECTIVE ACTION

9. MARINE GEAR CLUTCH WILL NOT ENGAGE IN ENGAGE/BACKFLUSH DIRECTIONS.

Step 1. Clutch Circuit Breaker on main circuit breaker panel located in the machinery compartment not in the ON position.

Turn Clutch Circuit Breaker to the ON position.

Step 2. Check oil level in marine gear.

Add oil to proper level on dipstick.

Step 3. Inspect marine gear Strainer Basket for clogs.

Clean strainer basket.

Step 4. Clutch solenoid is not functioning properly.

See paragraph 2-4, Emergency Shifting Controls and Indicators and notify the next higher level of maintenance.

Item 9

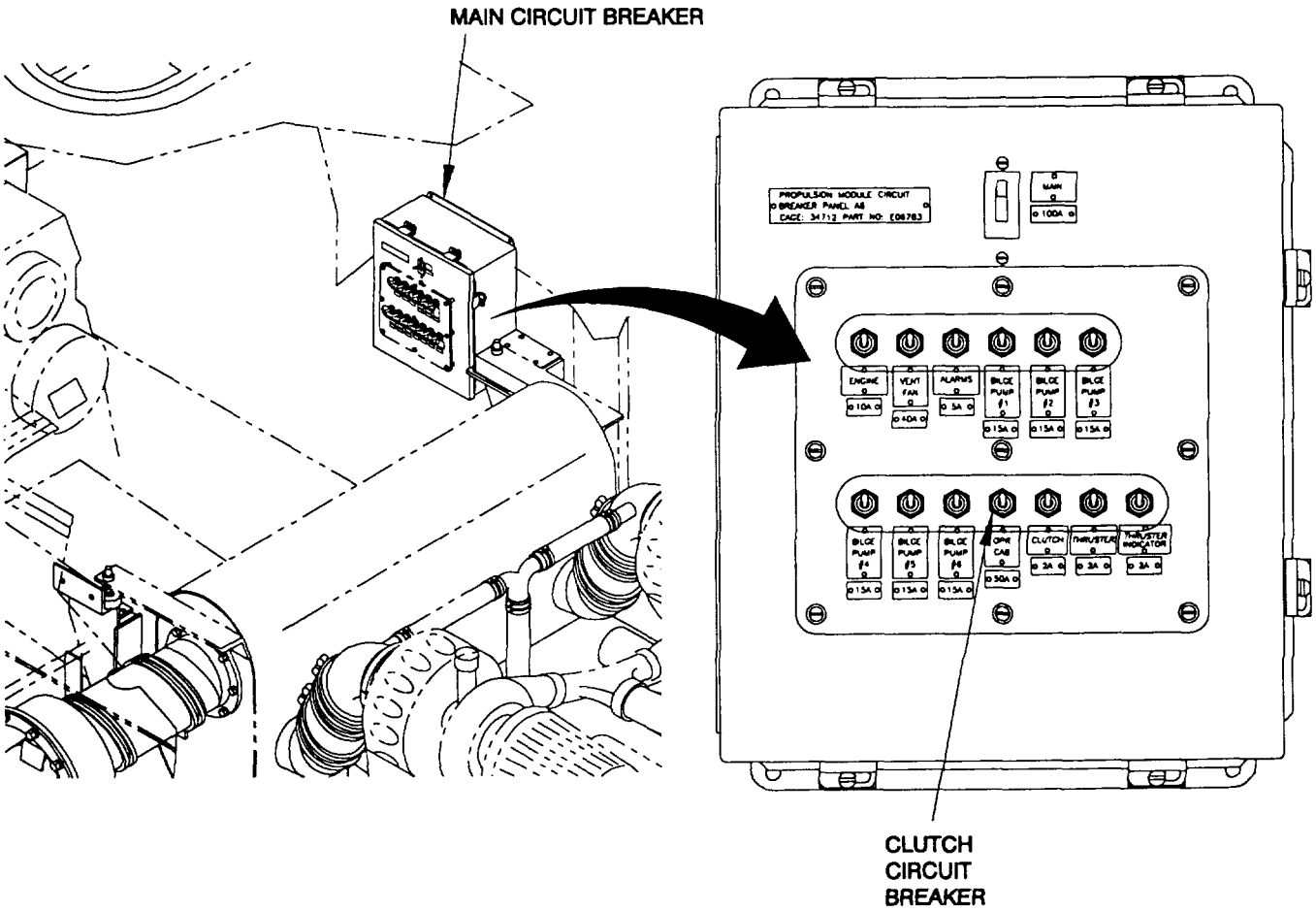
MAIN CIRCUIT BREAKER
CLUTCH
CIRCUIT
BREAKER

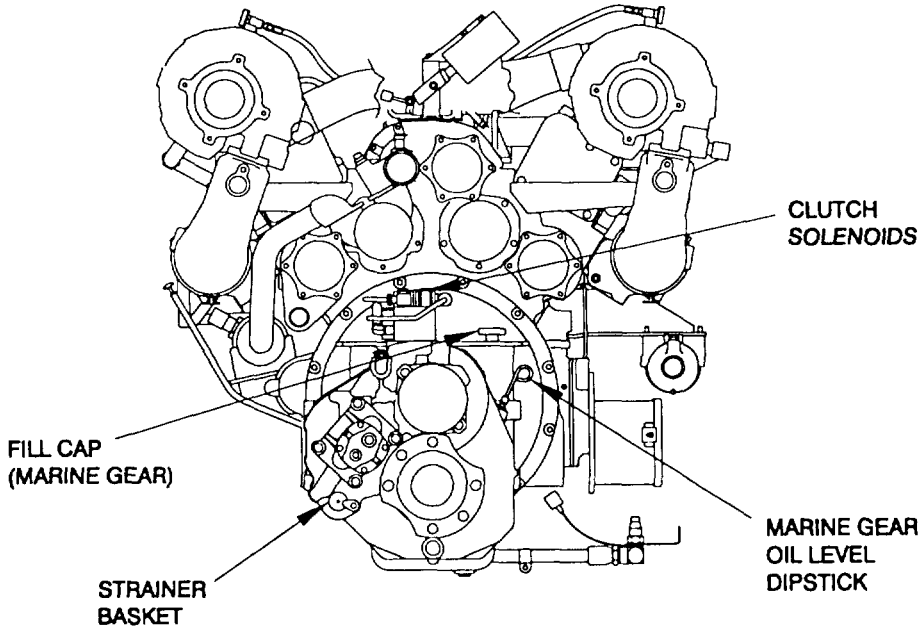
CLUTCH
SOLENOIDS
FILL CAP
(MARINE GEAR)
MARINE GEAR
OIL LEVEL
DIPSTICK
STRAINER
BASKET

Table 3-1. Troubleshooting - Continued

MALFUNCTION TEST OR INSPECTION CORRECTIVE ACTION

10. NO STEERING SYSTEM HYDRAULIC PRESSURE.

Step 1. Hydraulic oil low.

Add hydraulic oil to proper level; see Appendix F.

Step 2. Hydraulic line or hose is broken.

Notify Unit Level maintenance to replace.

Step 3. Defective hydraulic pump - unusual noise or excessive heat.

Notify next higher level of maintenance to replace.

Step 4. Check supply filtering system. If defective, notify next higher level of maintenance.

11. LOW ENGINE OIL PRESSURE (ENGINE AUDIBLE ALARM AND WARNING LIGHT WILL COME ON) (NORMAL OPERATION)

Step 1. Check oil pressure gauge for pressure reading of 32 psi (1.5 kp/cm2) minimum or above.

If pressure reading remains the same, reduce engine speed to idle and stop engine.

Step 2. Check engine oil level

If low, fill to proper level; see Appendix F.

Step 3. Turn Engine Alarm switch to the SILENCE position to turn OFF the audible alarm.

Step 4. Notify Unit Level maintenance.

Item 10

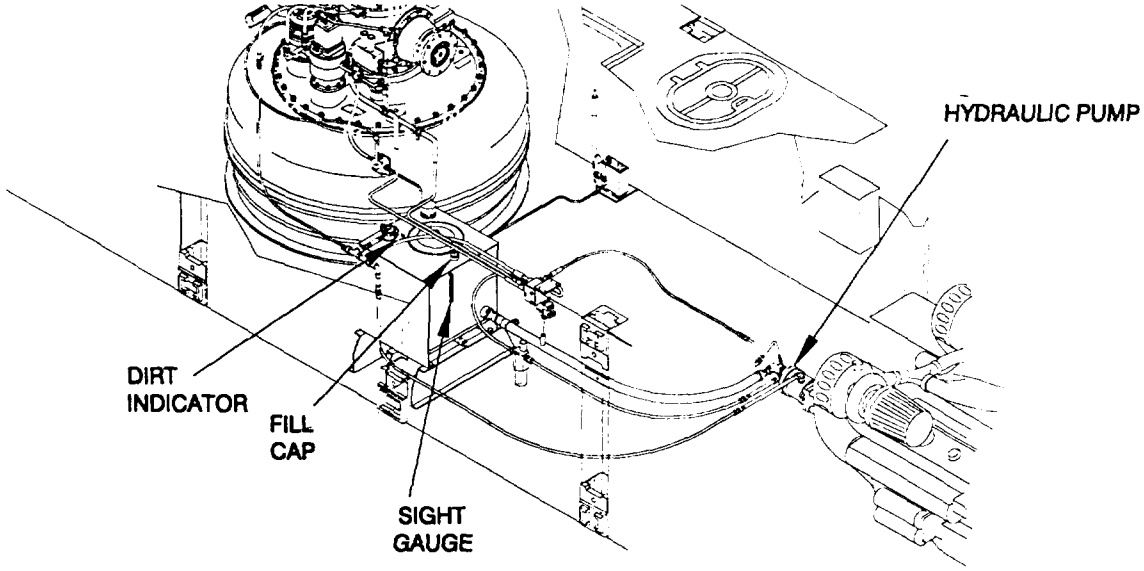

Item 11

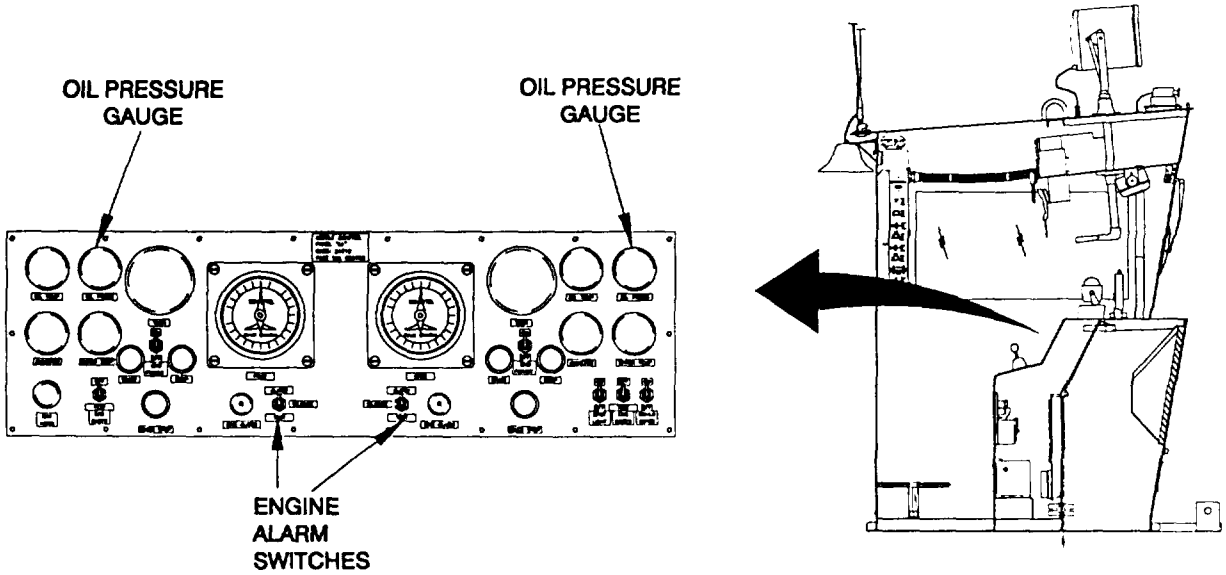

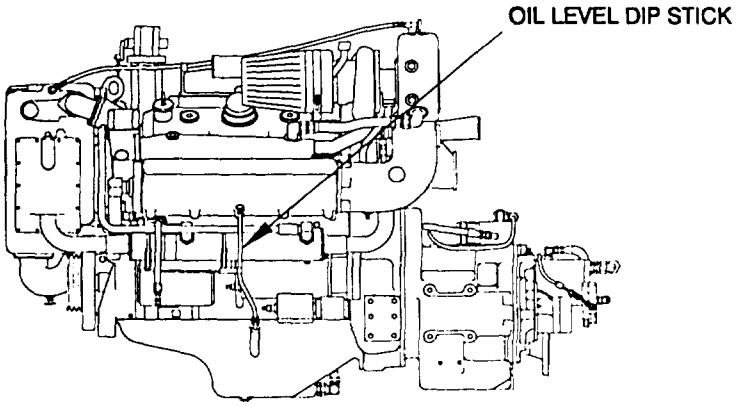

Table 3-1. Troubleshooting - Continued

MALFUNCTION
TEST OR INSPECTION
CORRECTIVE ACTION

12. OVERHEATING (ENGINE AUDIBLE ALARMS AND WARNING LIGHT WILL COMES ON)

Step 1. Check water temperature gauge.

Step 2. Reduce engine speed to idle.

CAUTION

DO NOT use emergency stop to shut off engine.

Step 3. Turn OFF engine by means of the engine STOP pushbutton for affected engine.

Step 4. Turn Engine Alarm switch to the SILENCE position for affected engine to stop audible alarm.

Step 5. Switch Duplex Strainer to opposite side and check raw water strainer of affected engine,

Step 6. Check raw water impeller on raw water pump to determine if clogged, inoperable or damaged.

WARNING

If cooling system is hot, open coolant filler cap slowly until all pressure is gone. Do not touch the cap with your bare hands. Never take off cap while engine is overheated. Allow it to cool down first.

Step 7. Remove filler cap for affected engine by turning clockwise. Check to see that water level is not more than 1 inch below bottom of neck.

Add coolant.

Step 8. Check for leaks around hose connections and water pumps of affected engine.

Step 9. Notify unit level maintenance.

13. ENGINE AUDIBLE ALARM AND RED LIGHT COMES ON (NORMAL OPERATION)

Step 1. Read appropriate gauge. Oil pressure gauge should be above 32 psi (2.2 kp/cm2). Water temperature gauge should be below 185°F (83°C).

a. If problem is high water temperature, see Malfunction No. 12.

b. If problem is low oil pressure, see Malfunction No. 11.

Item 12

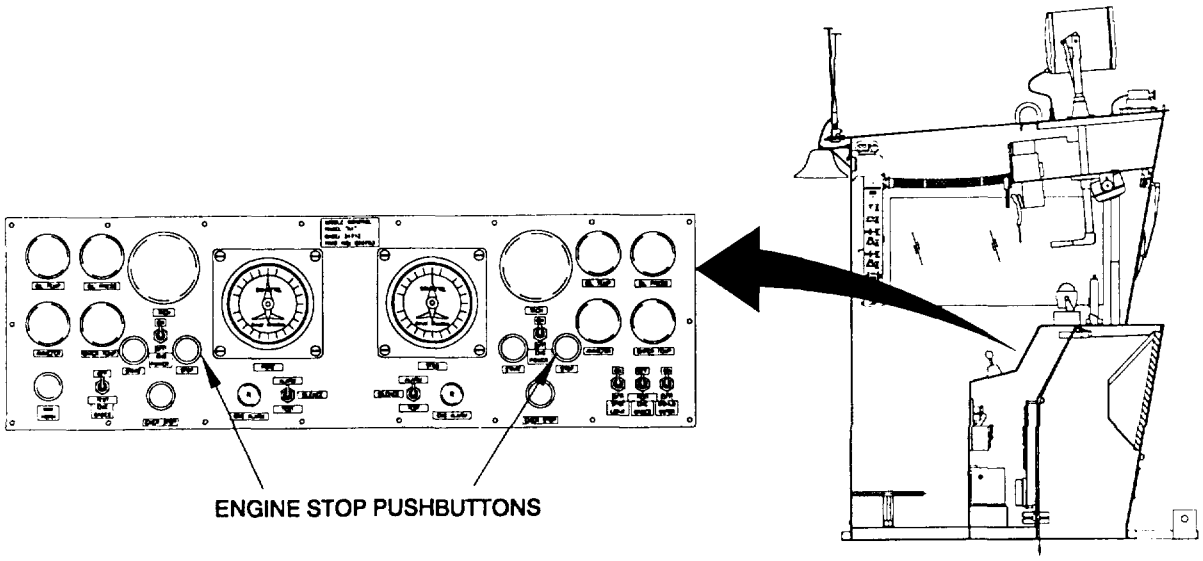
ENGINE STOP PUSHBUTTONS

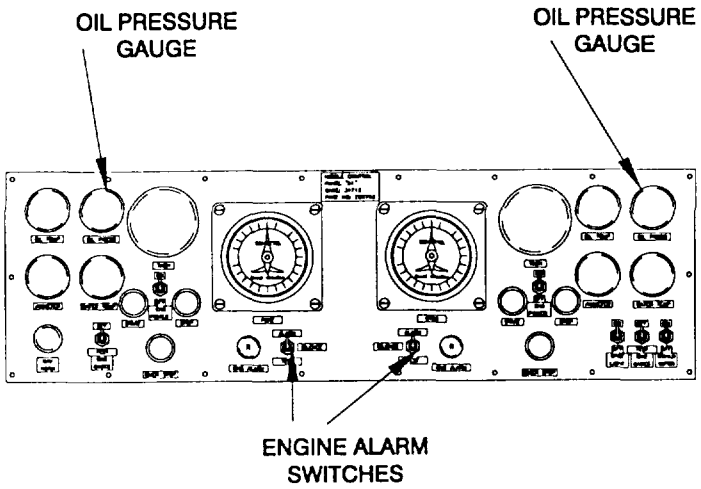
OIL PRESSURE GAUGE
OIL PRESSURE GAUGE
ENGINE ALARM SWITCHES

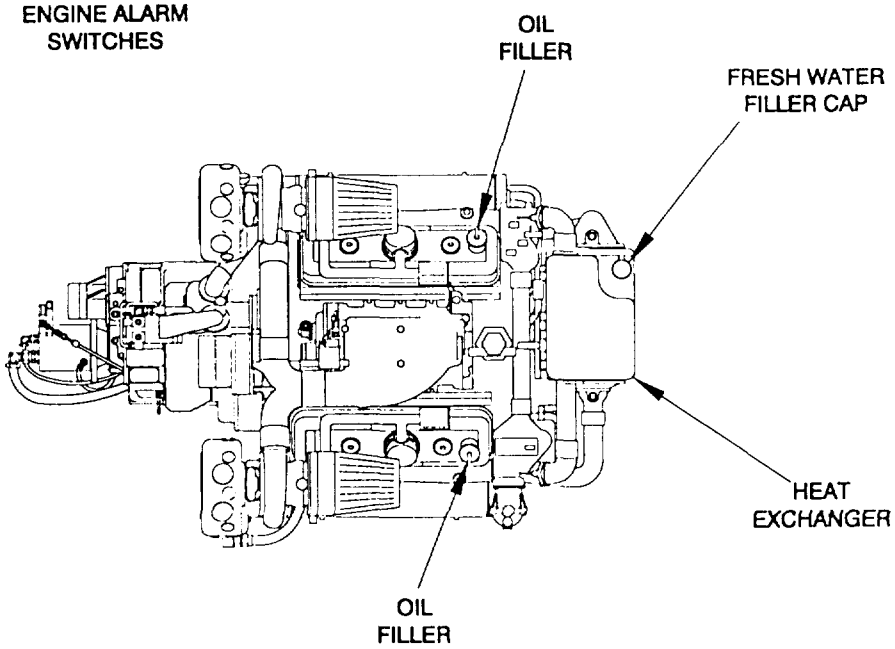
OIL FILLER
FRESH WATER FILLER CAP
HEAT EXCHANGER
OIL FILLER

Item 13

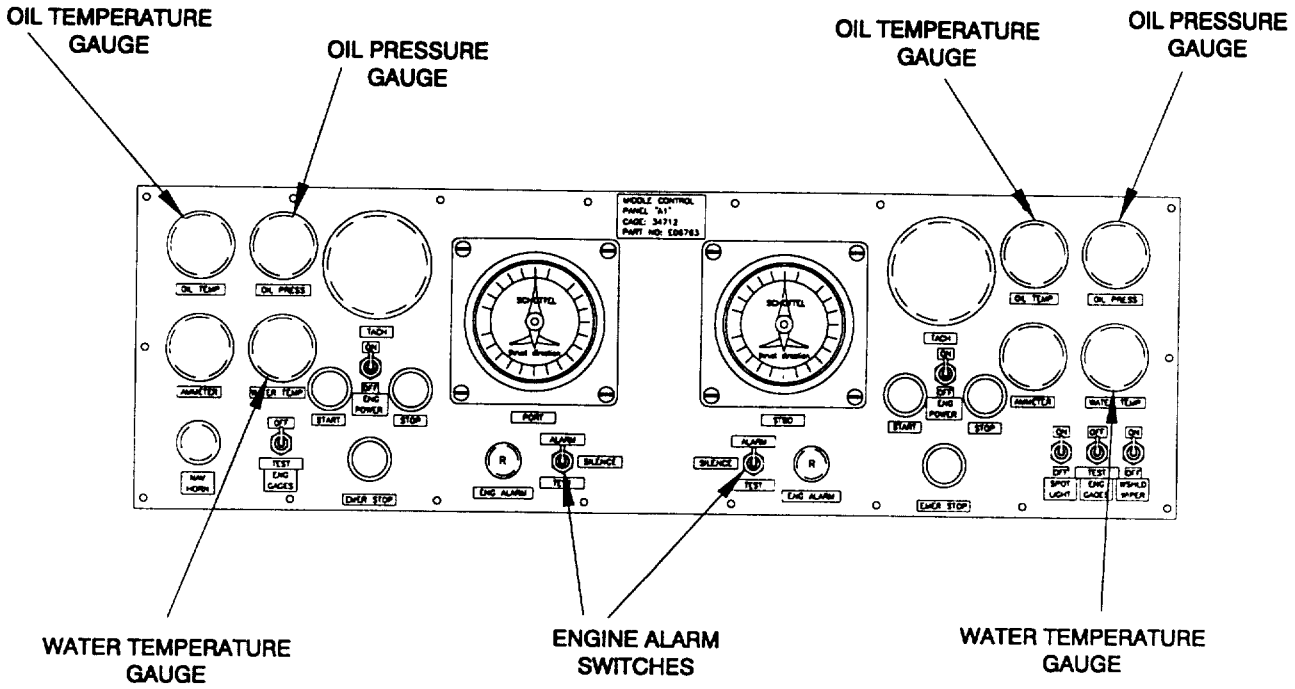
OIL TEMPERATURE GAUGE
OIL PRESSURE GAUGE
OIL TEMPERATURE GAUGE
OIL PRESSURE GAUGE
WATER TEMPERATURE GAUGE
ENGINE ALARM SWITCHES
WATER TEMPERATURE GAUGE

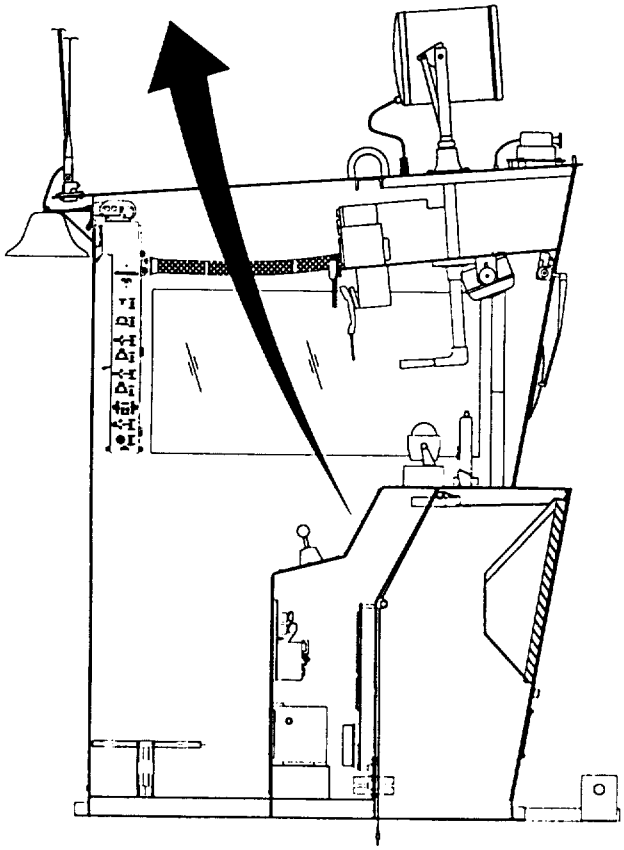

Table 3-1. Troubleshooting - Continued

MALFUNCTION TEST OR INSPECTION CORRECTIVE ACTION

14. MAST LIGHT AUDIBLE PULSE BEEPER SOUNDS.

Step 1. Determine if all lights or only one light is out.

If all lights out, check 20 amp circuit breaker A3CB1. Ensure that breaker is ON

If only one light out, check for burned out Primary Mast light. Switch to Spare mast light in cab mast enclosure. Notify supervisor to schedule replacement of primary mast light.

Step 2. Check for good wiring and grounding connections to light.

Tighten connections.

Step 3. Check for proper Navigation Lights Terminal Box wiring.

Refer to Appendix G. Notify higher level maintenance.

Item 14

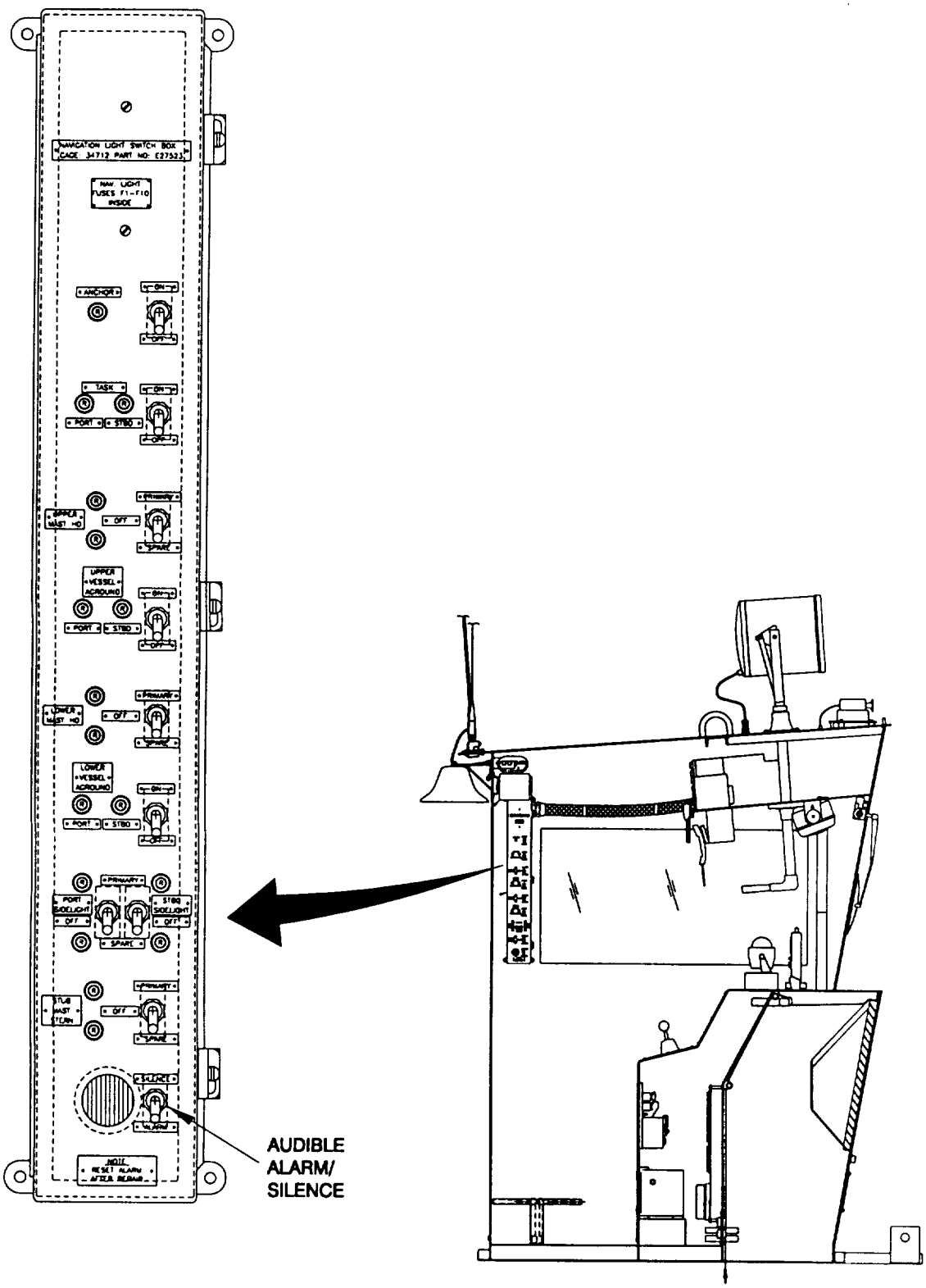
NAVIGATION LIGHT SWITCH BOX
NAV LIGHT FUSES F1-F10 INSIDE
ANCHOR
ON
OFF
TASK
PORT
STBD
UPPER MAST HD
PRIMARY
SPARE
UPPER VESSEL AGROUND
LOWER MAST HD
LOWER VESSEL AGROUND
PORT SIDELIGHT
STBD SIDELIGHT
STUB MAST STERN
SILENCE
ALARM
NOTE: RESET ALARM AFTER REPAIR
AUDIBLE ALARM/ SILENCE

Table 3-1. Troubleshooting -Continued

MALFUNCTION TEST OR INSPECTION CORRECTIVE ACTION

15. AMMETER INDICATES DISCHARGING OF SYSTEM.

Step 1. Alternator belts loose.

Notify unit maintenance.

Step 2. Defective Alternator.

Notify next higher level of maintenance.

Step 3. When engine power switch is turned ON, check battery voltage at cab Circuit Breaker Panel(A3) (+)and (-) test jacks with a volt meter, to see if reading is below 24.0 VDC.

Mission may be completed. Unit maintenance must be notified of problem.

Item 15

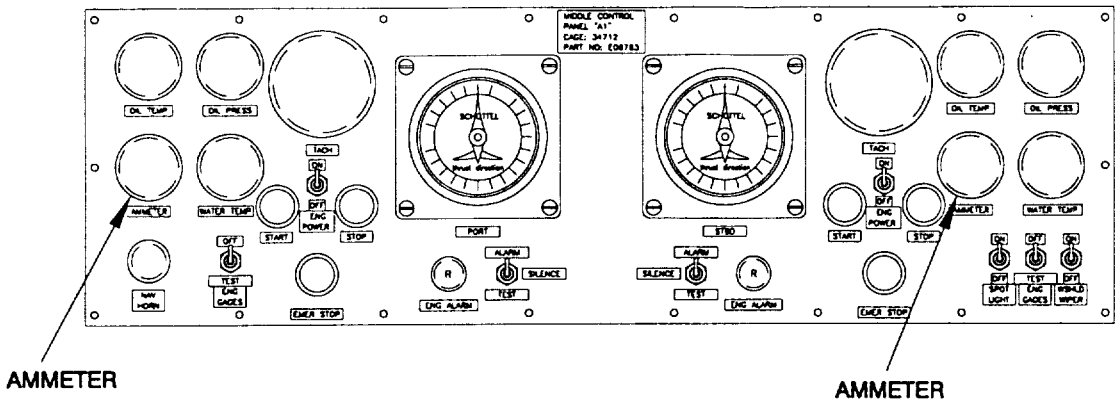

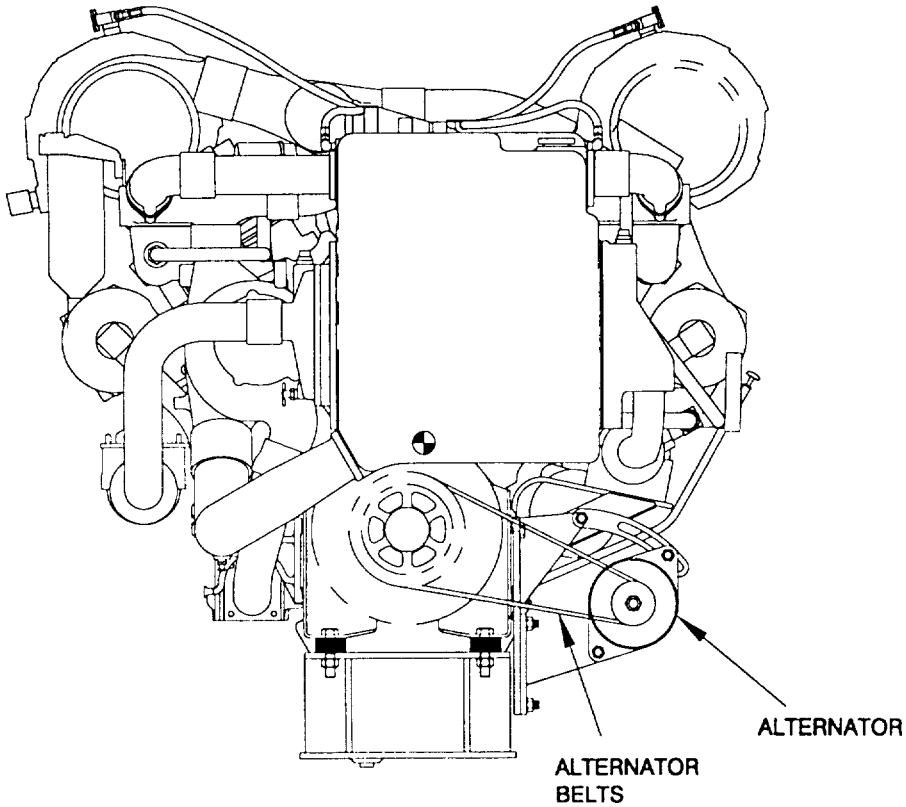

Table 3-1. Troubleshooting - Continued

MALFUNCTION TEST OR INSPECTION CORRECTIVE ACTION

16. NO PROPULSION FROM PUMP JET.

Step 1. Check to ensure that clutch is ENGAGED. CLUTCH Circuit Breaker on main circuit breaker panel (located in the machinery compartment) must be in the ON position.

Engage clutch and/or turn CLUTCH circuit breaker switch to the ON position.

Step 2. Intake plugged with foreign objects.

Back flush appropriate pump jet to clear intake. Notify next higher level of maintenance.

Step 3. Drive train not providing power to Pump-Jet/Thruster.

Notify next higher level of maintenance.

Step 4. Clutch solenoid is not functioning properly.

Notify the next higher level of maintenance.

Item 16

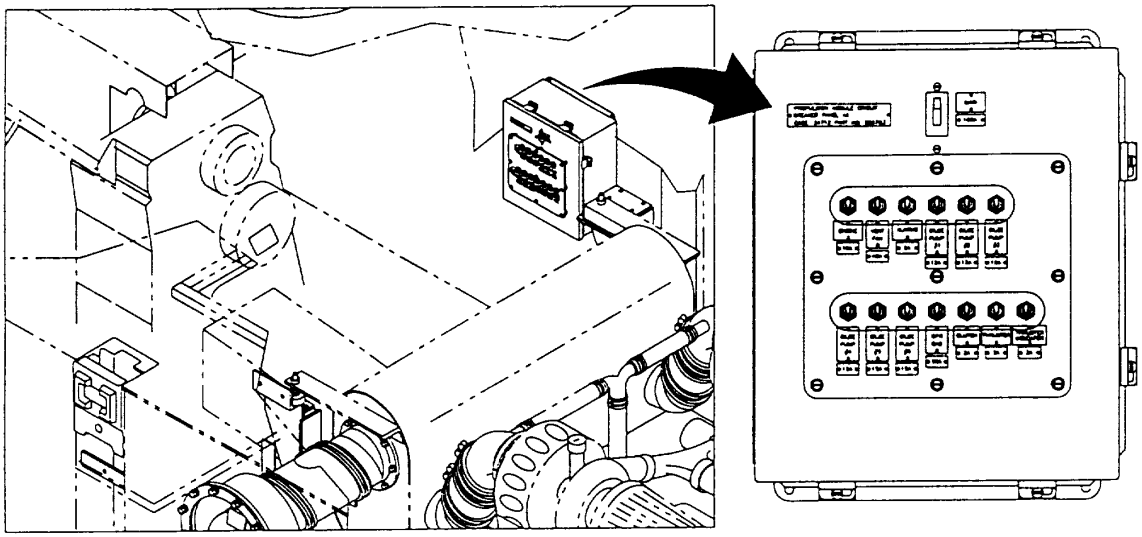

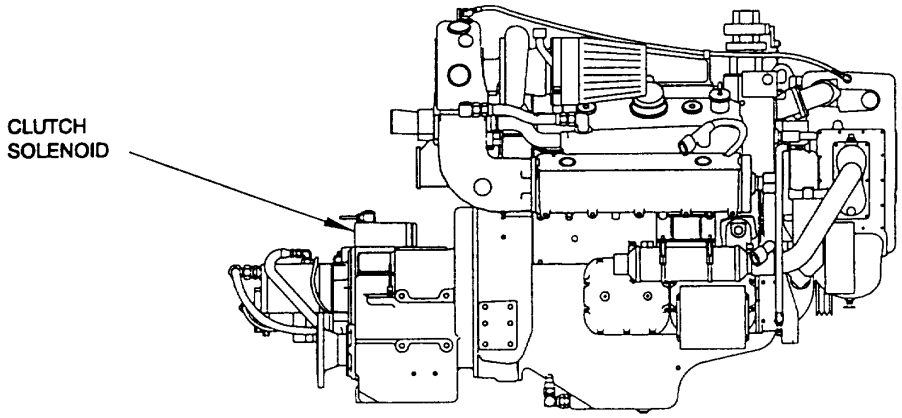

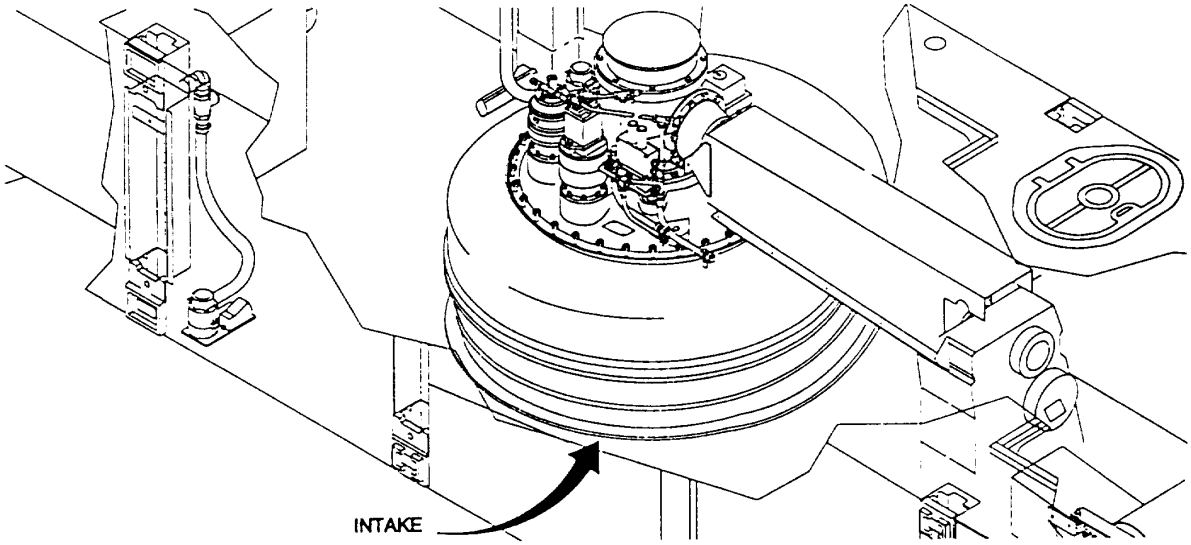

Table 3-1. Troubleshooting - Continued

MALFUNCTION
TEST OR INSPECTION
CORRECTIVE ACTION

17. NO STEERING CONTROL.

Step 1. Thruster Circuit Breaker Tripped.

Reset the Thruster Circuit Breaker on Main Circuit Breaker Panel located in the machinery compartment.

Step 2. No hydraulic pressure.

See System/Malfunction No. 9.

Step 3. Ensure bypass needle valve has not been opened.

Close bypass needle valve.

Step 4. Ensure 3/2 ball valve is set properly.

Set 3/2 ball valve handle to Hydraulic steering position.

Step 5. Hydraulic Brake is set.

See paragraph 2-4, Emergency Steering Control and Indicators and notify next higher level of maintenance.

Step 6. Defective steering controls.

Notify next higher level of maintenance.

18. NO STEERING CONTROL INDICATION.

Step 1. Thruster Indicator Circuit Breaker tripped.

Reset Thruster Indicator Circuit Breaker on Main Circuit Breaker Panel located in the machinery compartment.

Step 2. Low voltage being supplied by Directional/Auxiliary Junction Box A9 batteries.

Notify next higher level of maintenance.

Item 17

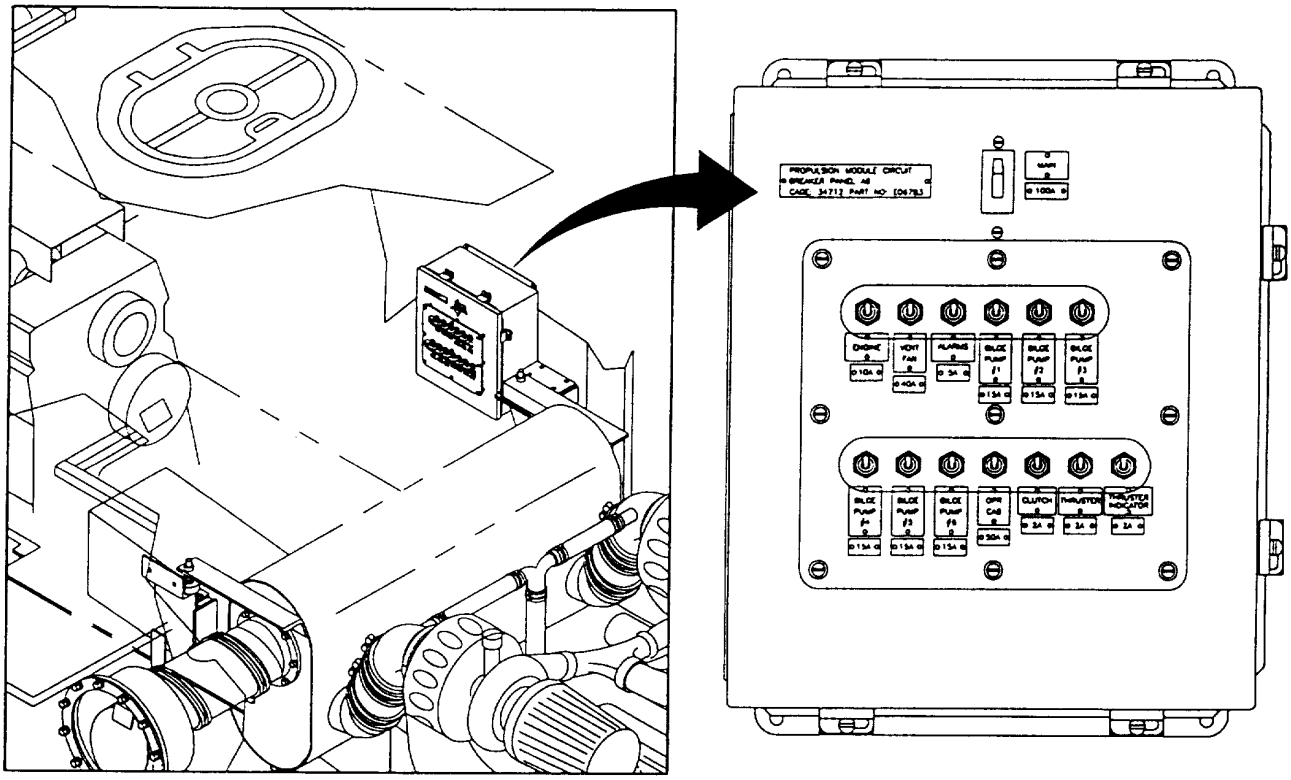
PROPULSION MODULE CIRCUIT
BREAKER PANEL AB
CAGE 34712 PART NO. [06783]
WARN
100A
ENGINE
VENT FAN
HUMPING
BILGE PUMP F1
BILGE PUMP F2
BILGE PUMP F3
10A
40A
3A
15A
BILGE PUMP F4
BILGE PUMP F5
BILGE PUMP F6
OPS CAB
CLUTCH
THRUSTER
TRANSFER INDICATOR
30A

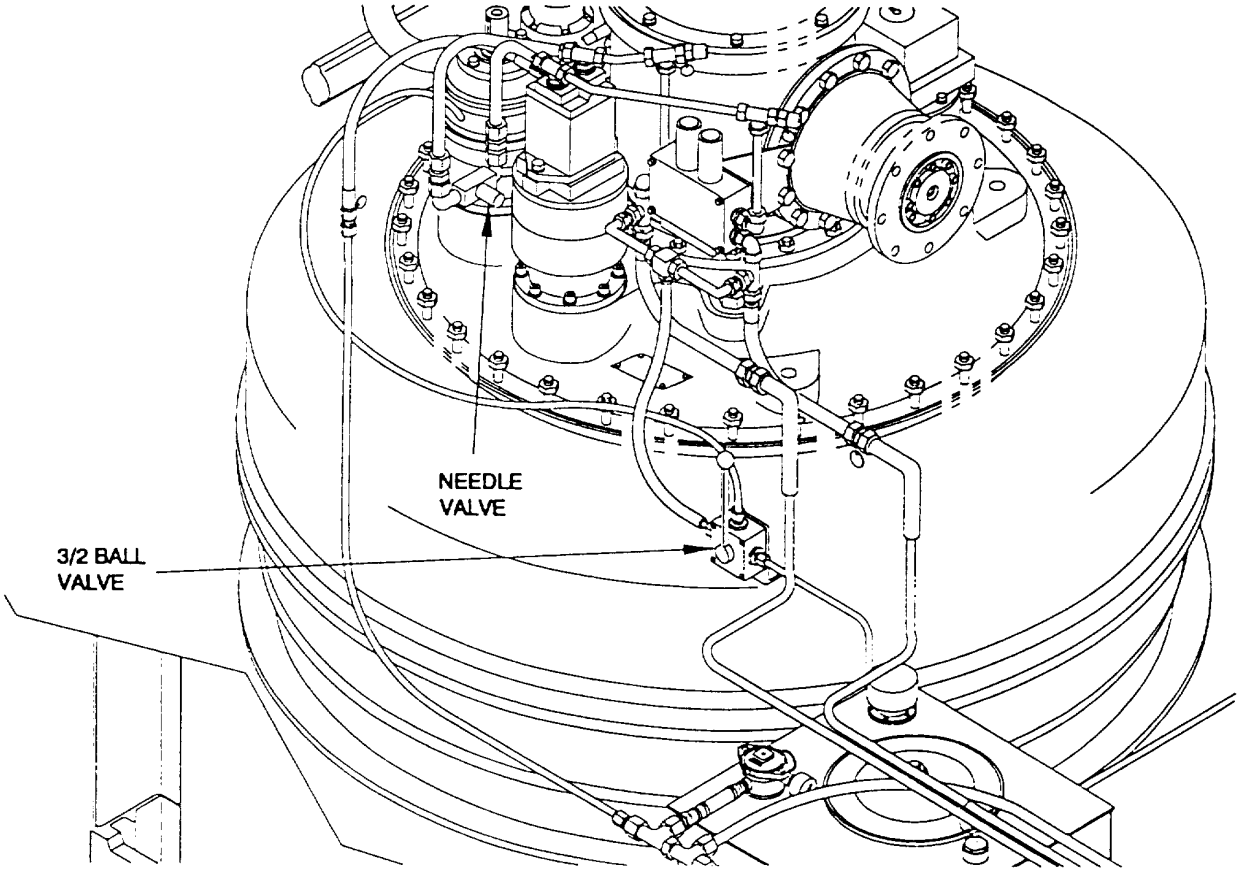
NEEDLE VALVE
3/2 BALL VALVE

Item 18

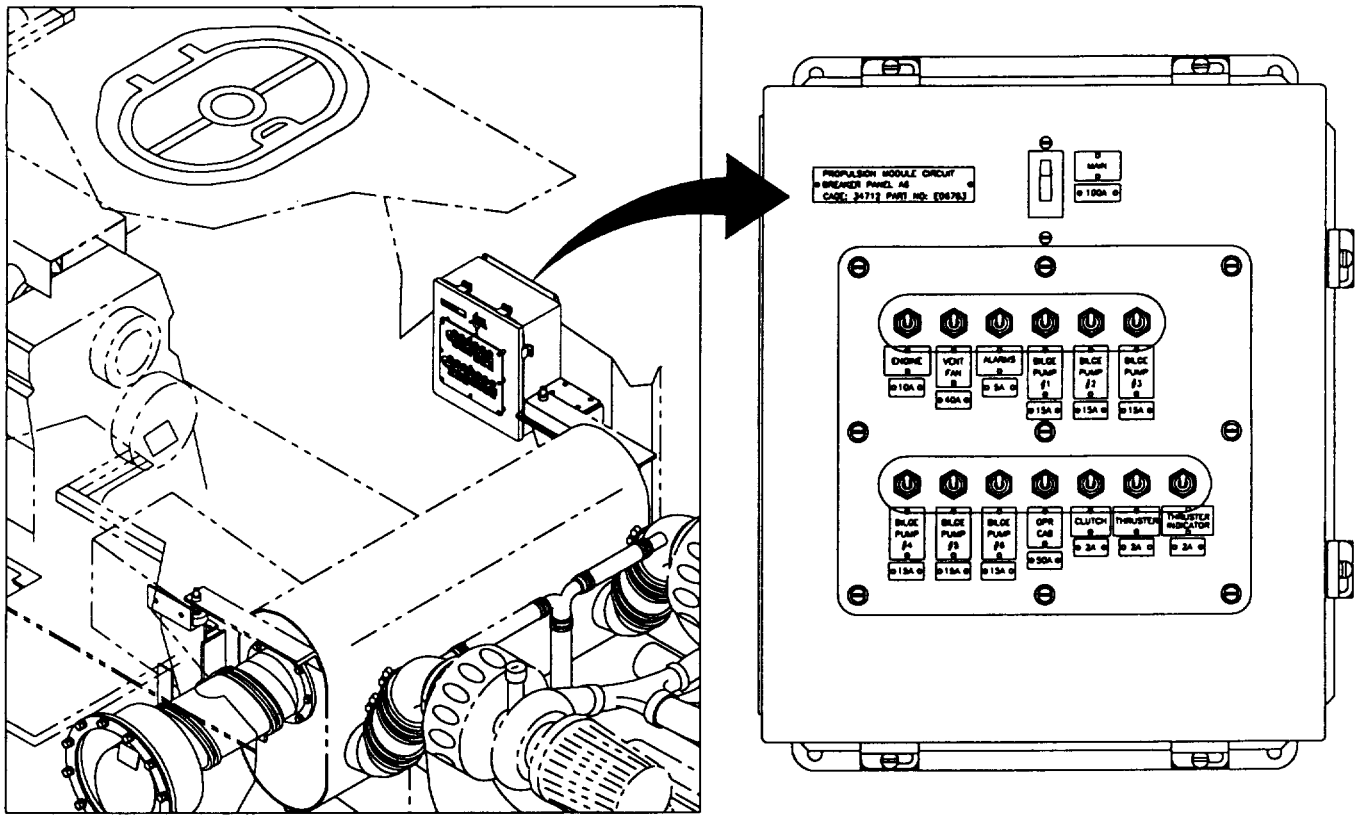
PROPULSION MODULE CIRCUIT
BREAKER PANEL A6
CAGE: 34712 PART NO: E06783
MAIN
100A
ENGINE
10A
VENT FAN
40A
ALARMS
5A
BILGE PUMP #1
15A
BILGE PUMP #2
15A
BILGE PUMP #3
15A
BILGE PUMP #4
15A
BILGE PUMP #5
15A
BILGE PUMP #6
15A
GPS CAB
50A
CLUTCH
3A
THRUSTER
3A
THRUSTER INDICATOR
2A

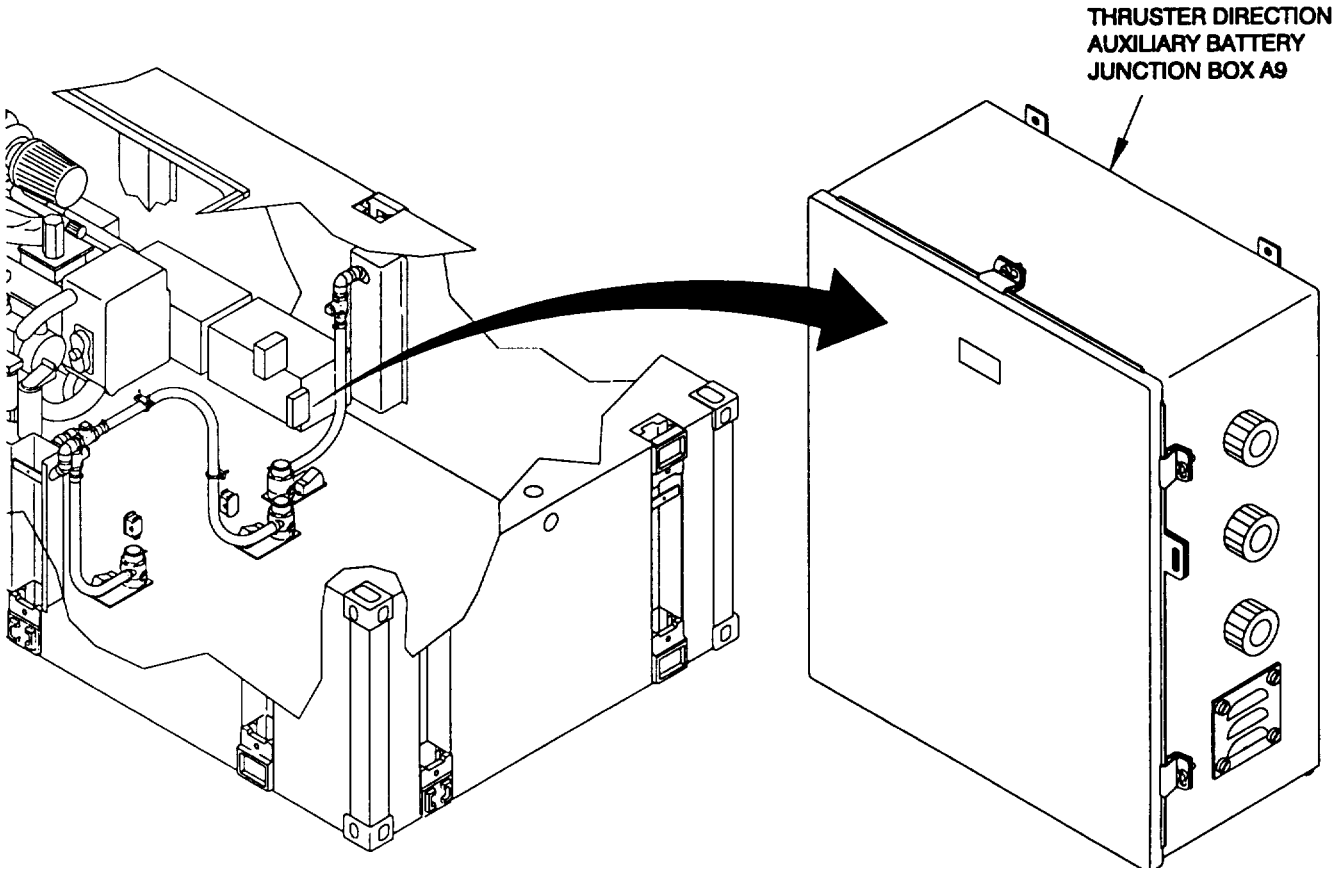
THRUSTER DIRECTION
AUXILIARY BATTERY
JUNCTION BOX A9

Table 3-1. Troubleshooting - Continued

MALFUNCTION
TEST OR INSPECTION
CORRECTIVE ACTION

19. MAST LIGHT(S) WILL NOT ILLUMINATE.

Step 1. Nav Lights Circuit Breaker switch located on operator's cab circuit breaker panel are in the OFF position.

Switch Nav Lights circuit breaker to ON.

Step 2. Blown Fuse in the Navigation Light Switch Box.

Notify next higher level of maintenance.

Step 3. Bulb Dead.

Notify next higher level of maintenance.

Step 4. Faulty connections.

Check for proper connections.

20. BILGE PUMP(S) DO NOT FUNCTION.

Step 1. Bilge Pump circuit breakers located on the main circuit breaker panel (A6) in the machinery compartment in the OFF position.

Switch Bilge Pump circuit breakers to ON position.

Step 2. Control Panel circuit breaker in operator cab circuit breaker panel is not in the OFF position.

Switch Control Panel circuit breaker to the ON position.

Step 3. Faulty or clogged float switch.

Clean out float switch.

Clean off any corrosion on contacts.

Notify next higher level of maintenance.

Item 19

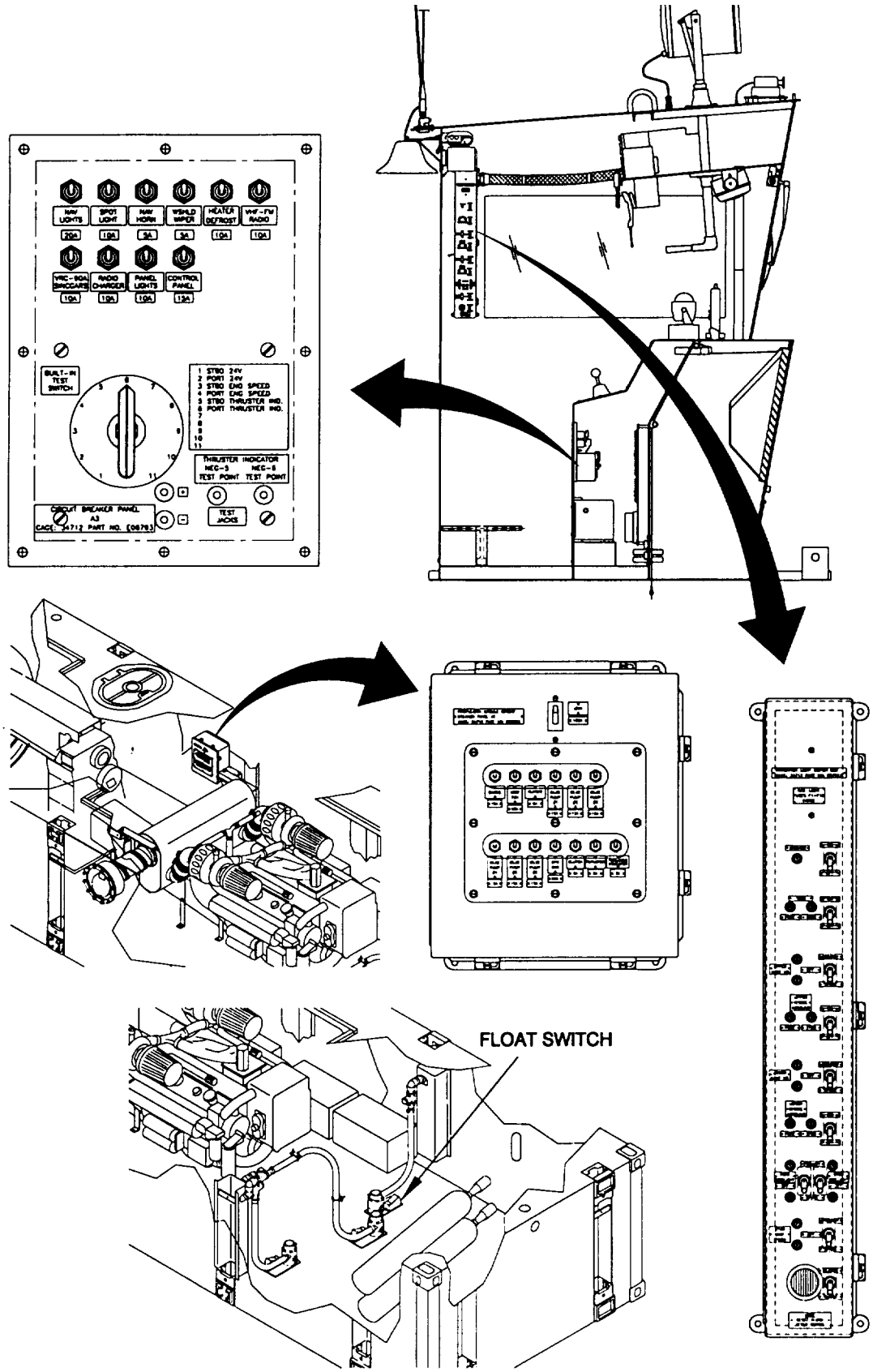
NAV LIGHTS
SPOT LIGHT
NAV HORN
W/SHLD WIPER
HEATER DEFROST
VHF-FM RADIO
20A
10A
5A
5A
10A
10A
VRC-90A SINCGARS
RADIO CHARGER
PANEL LIGHTS
CONTROL PANEL
10A
10A
10A
13A
BUILT-IN TEST SWITCH
1 STBD 24V
2 PORT 24V
3 STBD ENG SPEED
4 PORT ENG SPEED
5 STBD THRUSTER IND.
6 PORT THRUSTER IND.
THRUSTER INDICATOR
NEG-S
NEG-S
TEST POINT
TEST POINT
CIRCUIT BREAKER PANEL
A3
TEST JACKS
FLOAT SWITCH

Item 20

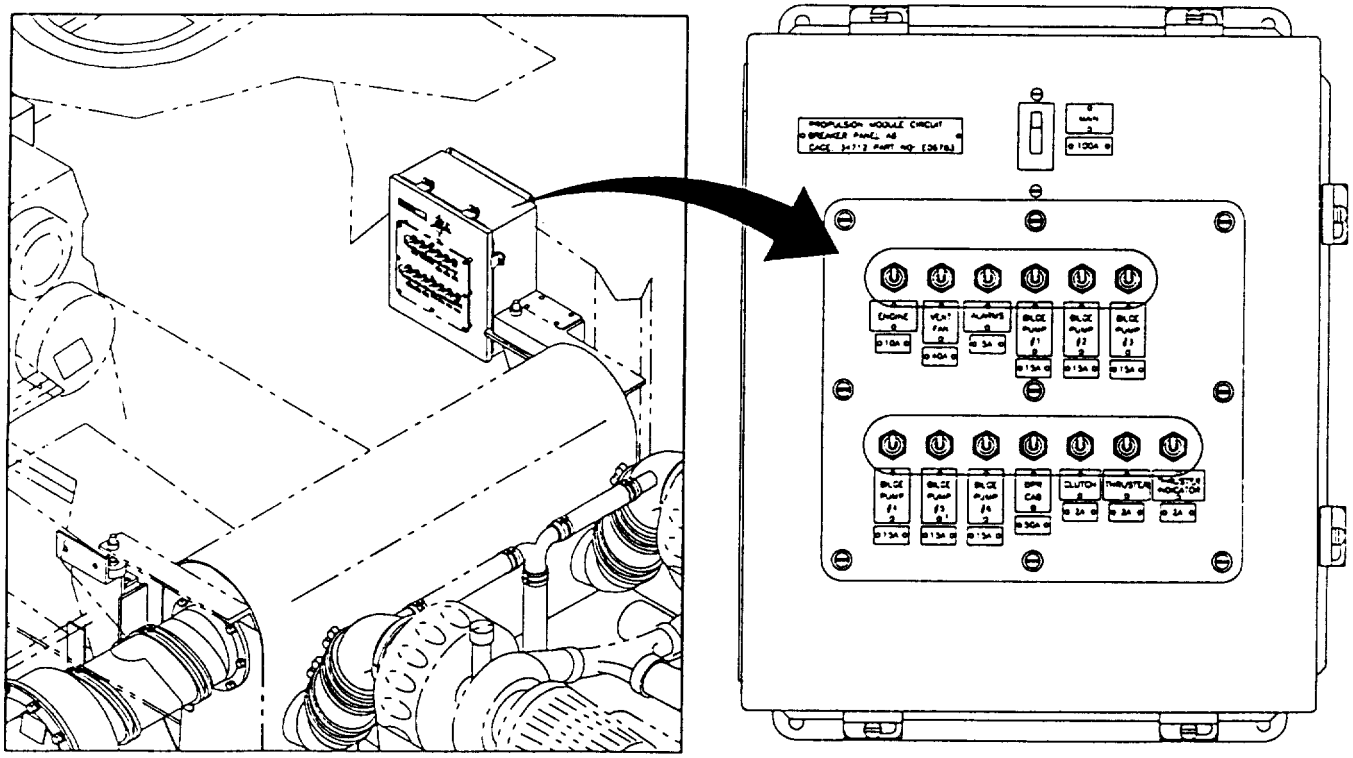
PROPULSION MODULE CIRCUIT
BREAKER PANEL AS
MAIN
100A
ENGINE
VENT FAN
ALARMS
BILGE PUMP #1
BILGE PUMP #2
BILGE PUMP #3
BILGE PUMP #4
BILGE PUMP #5
BILGE PUMP #6
BRM CAB
CLUTCH
THRUSTER
THROTTLE INDICATOR

Section III. Operators Maintenance Procedures.

3-4 INTRODUCTION. This section will contain detailed procedures for maintenance functions authorized to the watercraft operator by the Maintenance Allocation Chart (MAC). Procedures will include functions such as inspect, test, record and report deficiencies to maintenance for repair/replacement.

3-5 OPERATORS RESPONSIBILITY.

a. Verify that all Pre-Start Check lists have been completed and signed off upon completion by the operator.

b. Verify that all Daily Maintenance has been performed and signed off upon completion by the operator.

c. Visually inspect the deck, connectors, flexor, deck fittings, cab, mast, rails for physical damage, cracked welds, corrosion and flaking paint.

d. Visually inspect interior of cab for damaged controls, broken gauges, damaged window glass, corrosion, loose mountings and connections, leaks and burned out bulbs.

e. Turn on all navigational lights and visually inspect that all are operating.

f. Verify operation of windshield wiper, search light, horn, battle lantern, inspect portable fire extinguisher gauge reading.

g. Verify hatches have recently been lubricated and are closed and latched properly.

h. Verify power connections to cab and opposite power module are properly connected.

i. Verify radio equipment functions properly.

j. After starting engine listen for unusual noises, operate steering controls for normal operation, temperature and pressure gauges indicating normal readings, engine RPM responds and indicates correct operating RPM's, verify volt meter reading correctly and verify water discharging form exhaust ports.

k. During maintenance inspection procedures record all deficiencies found on DA Form 2404 and vessel log book. Turn in report to maintenance for repair/replacement.

Section IV. Packaging and Lifting.

3-6 STOWAGE. Modular Causeway Sections are transported and stowed by packaging them in ISOPAK configuration. MCF ISOPAK configuration is accomplished by stacking a pair of End Rake Modules, joined nose-to-nose, atop and connected to a Center Module unit as shown in (Figure 3-4). The weight and dimensions of the (ISOPAK assembly permit handling as a 40 foot ISO freight container). Modular MCF Sections have a high stow factor; one MCF section is stowable and transportable as three 40-foot long, 9-foot high ISOPAKs weighing approximately 45,500 pounds each. It can be efficiently:

a. Stowed in ship's container cells.
b. Loaded at ports by gantry cranes.
c. Handled by T-ACS cranes.
d. Moved by Rough Terrain Container Handler (RTCH).
e. Road transported on trucks and trailers.

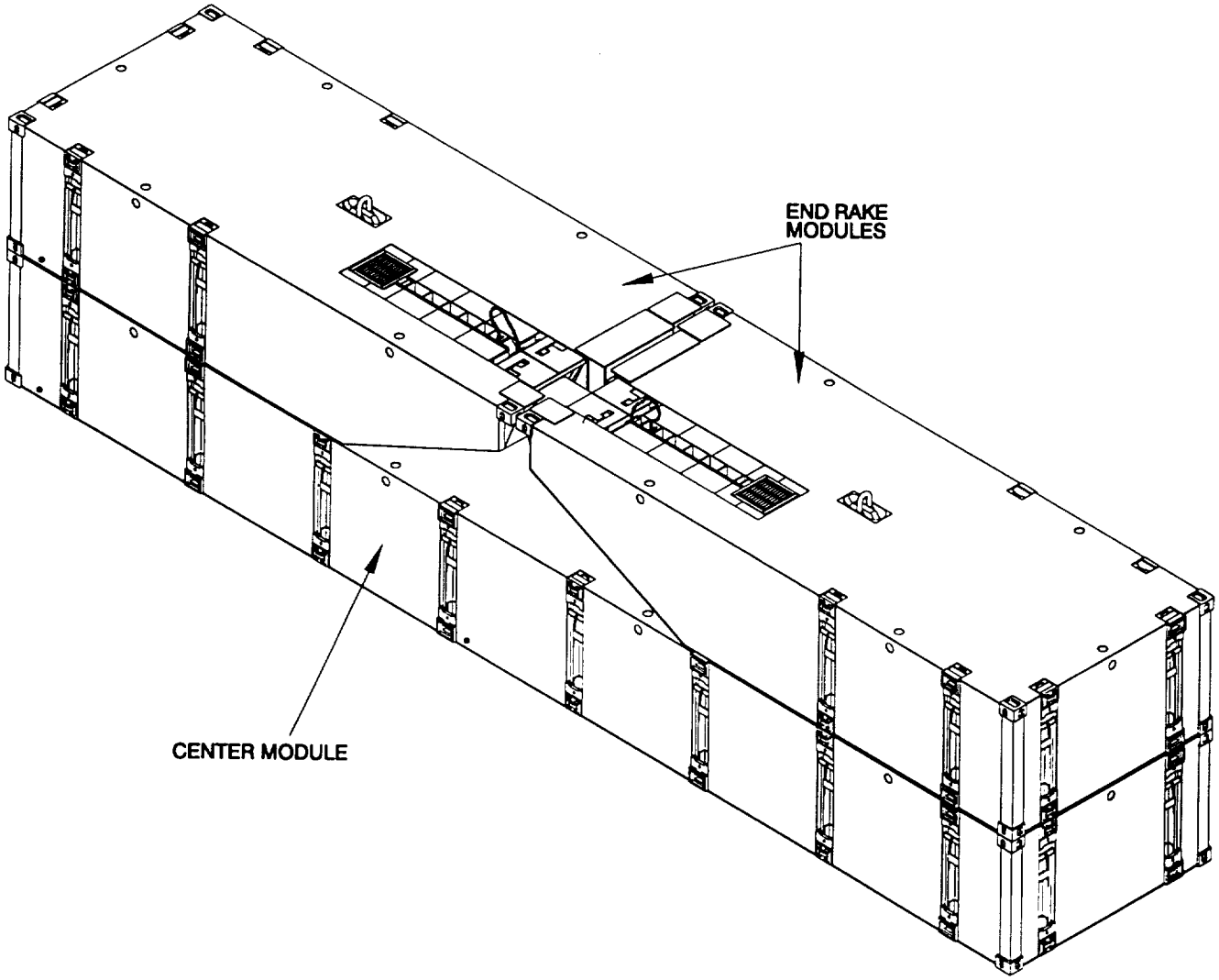

Figure 3-4. MCF ISOPAK.

3-6.1 Building an ISOPAK. To construct an ISOPAK (Figure 3-5), perform the following steps.

a. Remove all deck fittings and stow all connectors of both End Rakes and Center Module. Connect two End Rakes nose-to-nose using two horizontal ISOPAK connectors in the following configuration:

   1) Right-Hand End Rake to Left-Hand End Rake Center End Rake to Center End Rake.

   2) Verify ISOPAK connectors are locked.

b. Install four vertical ISO connectors on the Center Module, one at each corner. Verify connectors are in position to receive the End Rakes. Move the lever accordingly. Place two dunnage boards on each Center Module.

WARNING

Wear gloves and safety shoes at all times. Severe injury may result when aligning ISOPAK corners.

c. Lift connected End Rake Modules by crane slings and place on top of Center Module or Propulsion Module. Align the four corners to get a metal-to-metal fit. Lock ISOPAK connectors by moving the lever.

d. At this point the ISOPAK maybe lifted from four corners using the Army Rough Terrain Container Handler (RTCH). Note that three ISOPAKs comprise one MCF section.

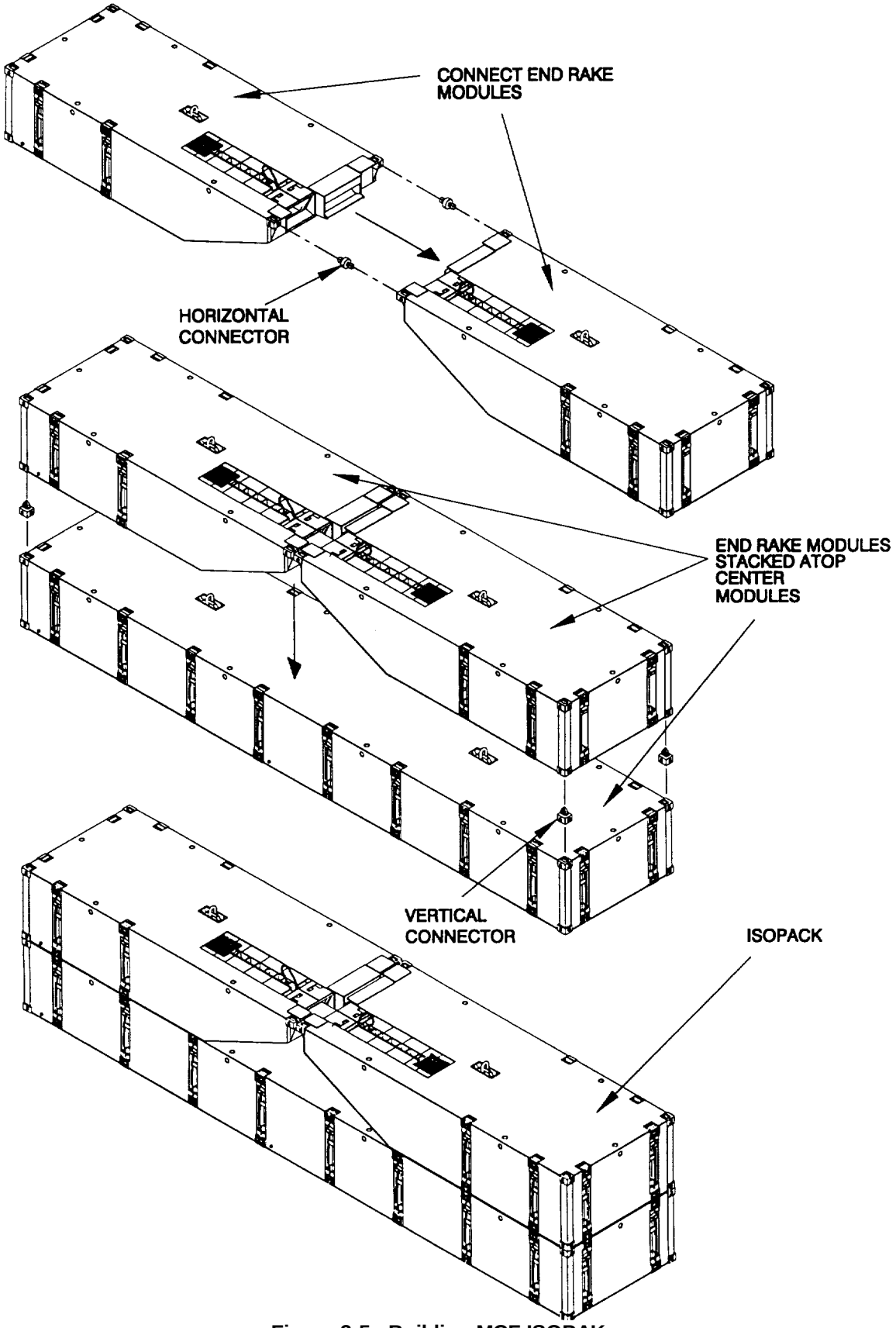

Figure 3-5. Building MCF ISOPAK.

3-6.2 Interim Stacking. Modular Causeway Ferry Sections may be stowed as ISOPAKs when not in use Figure 3-7. If used more frequently, the MCF system can be stacked as 3 strings atop each other as shown in (Figure 3-6). One string is made of a Center Module with both End Rake Modules attached. Interim stacking occupies twice the area and half the height of an ISOPAK. It is recommended that the center string be placed in the middle of the stack to facilitate reassembly. Both methods of stacking are important since they reduce the MCF exposure to the corrosive seawater environment. This results in extending unit service life, reducing maintenance cost and saving of valuable waterfront space and pier facilities.

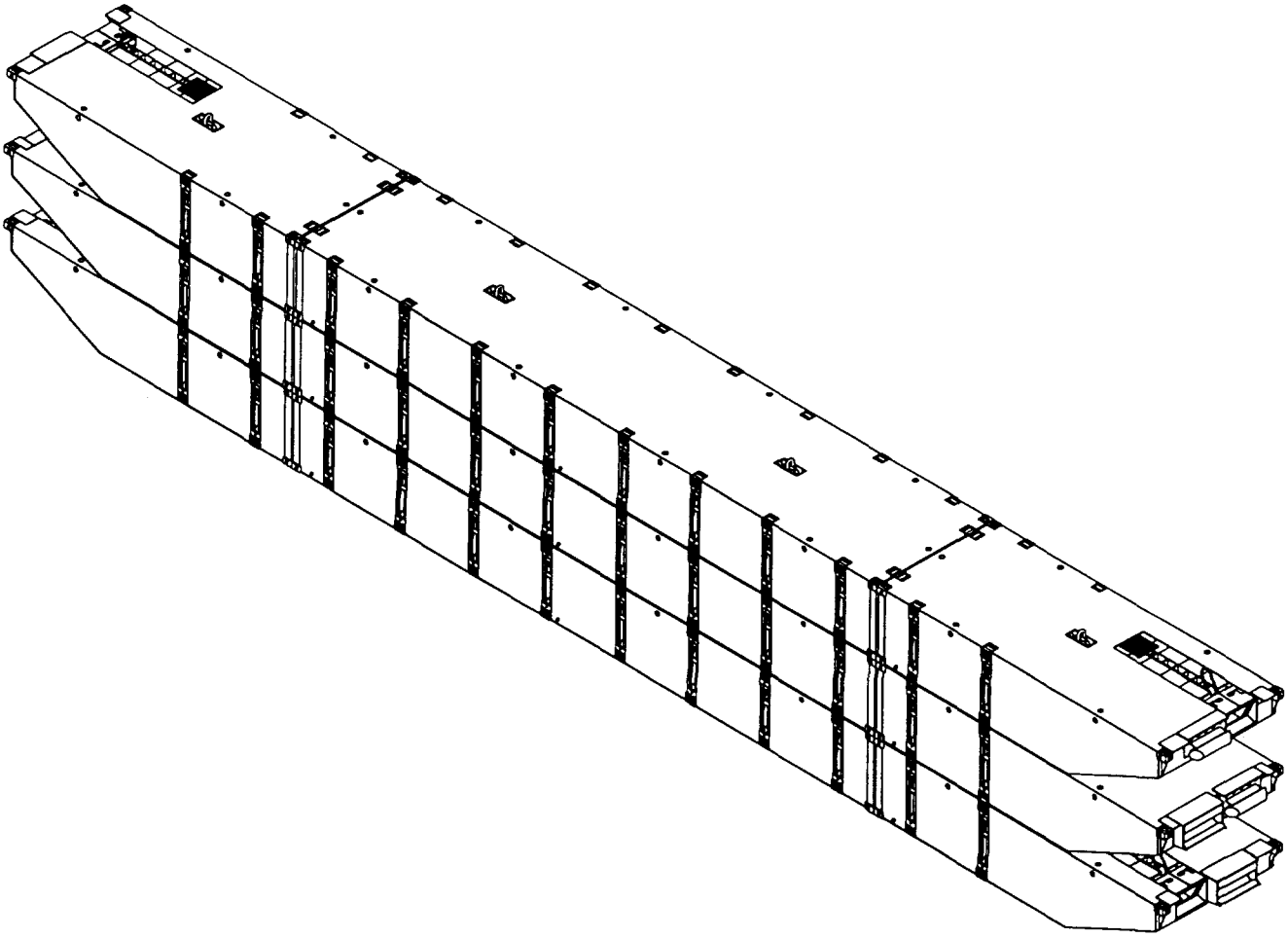

Figure 3-6. MCF Interim Stacking.

3-6.3 Lifting End Rakes.

NOTE

Ensure modules are leveled when hoisted by slings.

a. The End Rake utilizes a three-leg bridle with a 1-1/4 inch x 4 inch x 8 inch master link. Center leg: 3/4 inch diameter 6 x 37 IWRC wire rope with thimbles both ends (Figure 3-7). The leg is 6 foot pull to pull with one 11 ton eye hook at the load end.

b. Outer legs: 3/8 inch x 14 foot Hi-Test chains with clevis grab hook on the load ends. The lift ends are attached to the master link.

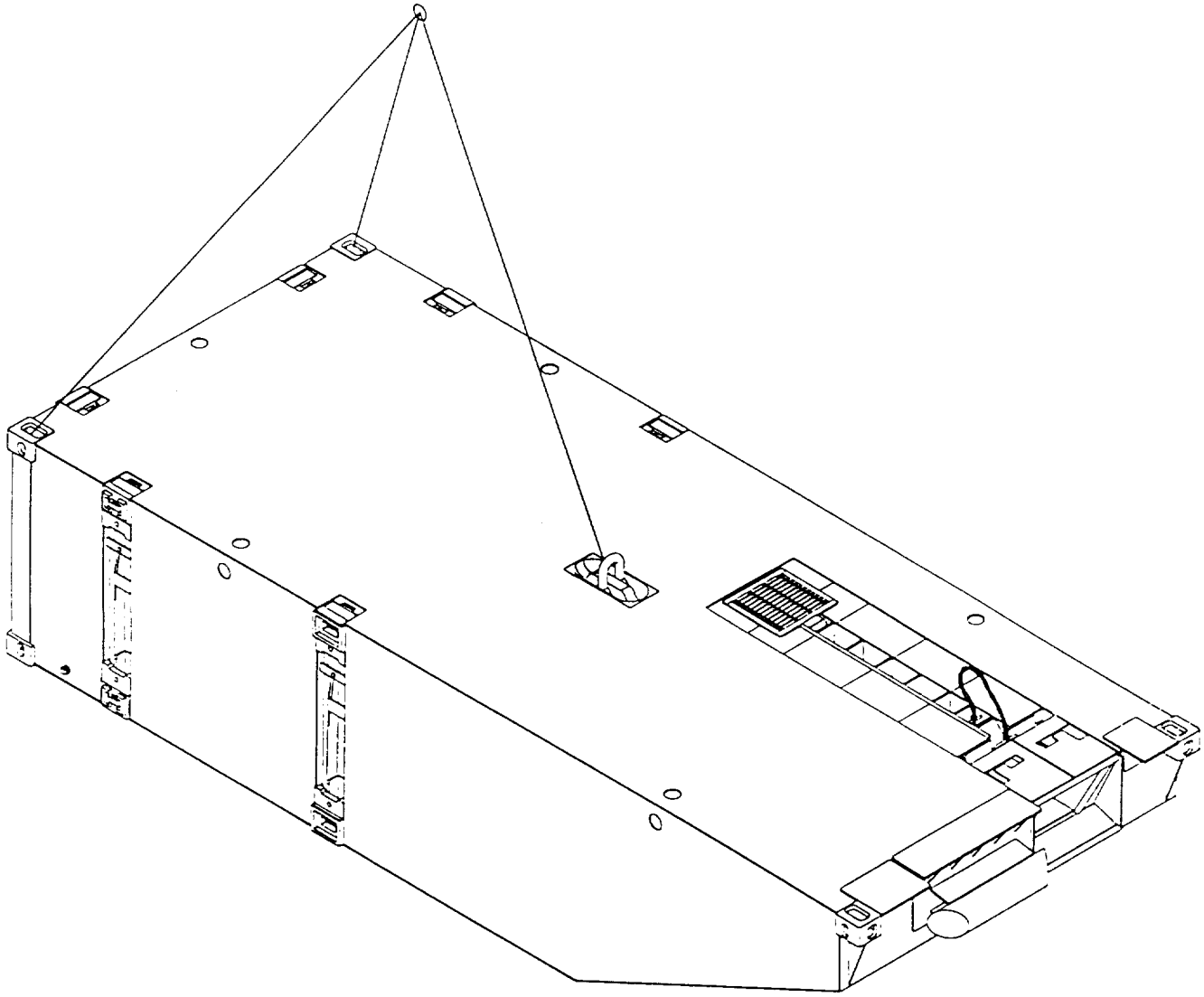

Figure 3-7. Lifting MCF End Rakes.

3-6.4 Lifting Center Modules.

a. A string sling is utilized when lifting the Center Module (Figure 3-8). The string slings consists of a 1 3/8 inch diameter 6 X 37 IWRC two leg, wire rope bridle with a 2-1/4 inch x 8 x 16 inch master link at the lift end. Bridle legs are 14 feet pull to pull, with thimbles at each end. One 22 ton eye hook is at the load end of each leg.

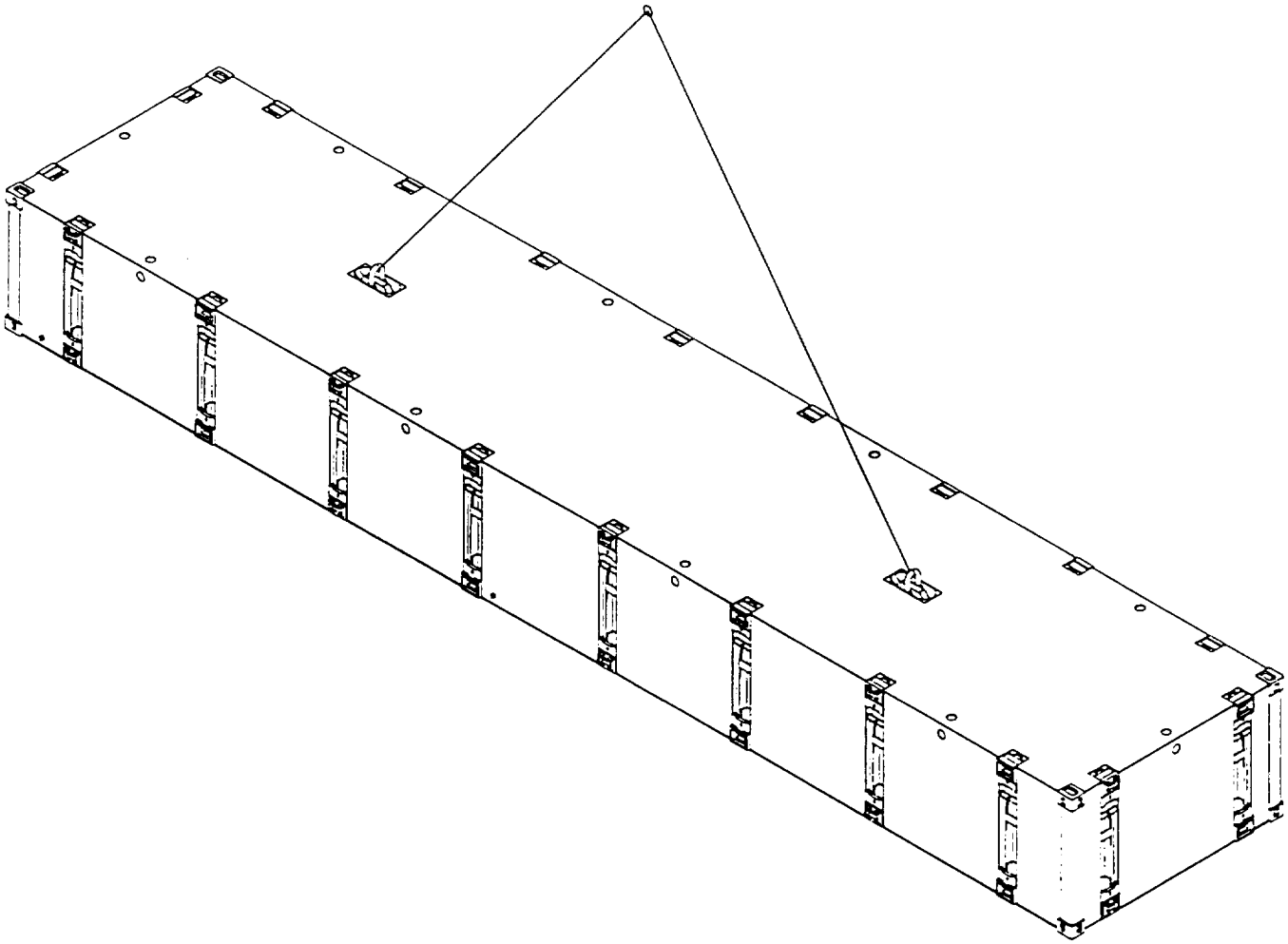

Figure 3-8. Lifting MCF Intermediate Module.

3-6.5 Lifting the MCF Section.

a. The MCF lifting sling consists of a spreader beam (Figure 3-9) with a 2-1/2 inch safety anchor shackle in the top center lifting eye along with 1-3/4 inch diameter 6 x 37 IWRC two-leg and wire rope bridles with 2-1/4 inch x 8 inch x 16 inch master links attached to bottom-lift eyes of the spreader beam using 1-3/4 inch safety anchor shackles. Bridle IWRC legs are 22 feet pull to pull with thimbles on each end. One 1-3/4 inch screw pin anchor shackle is attached to the lift end of each bridle leg.

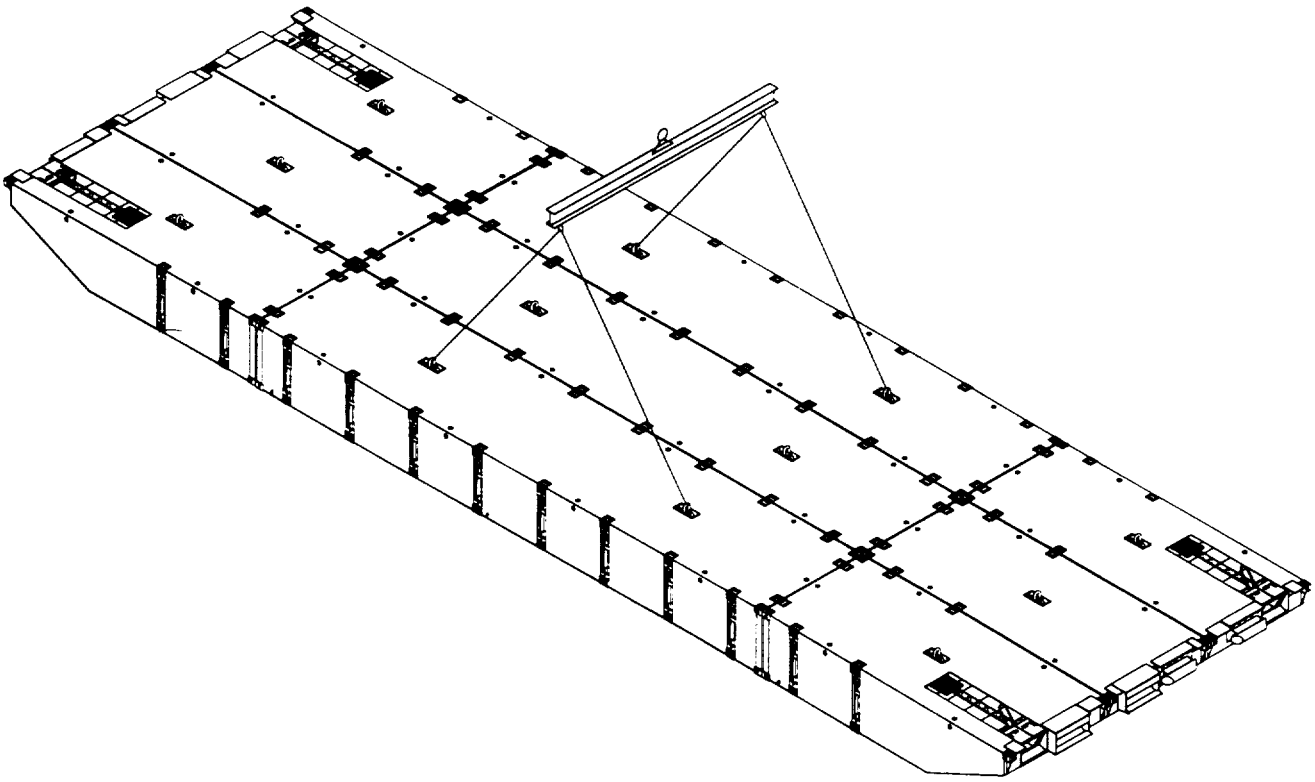

Figure 3-9. Lifting the MCF Section.

3-6.6 Lifting The ISOPAK.

a. Lift each End Rake Module into position nose-to-nose onto a Center Module using the three point hookup shown in Figure 3-7.

b. After building the ISOPAK and locking its four corners using ISO Twistlocks, the ISOPAK can be lifted and transported using the U.S. Army Rough Terrain Container Handler (RTCH) as shown in Figure 3-10. Ensure a ground guide is utilized when using the RTCH.

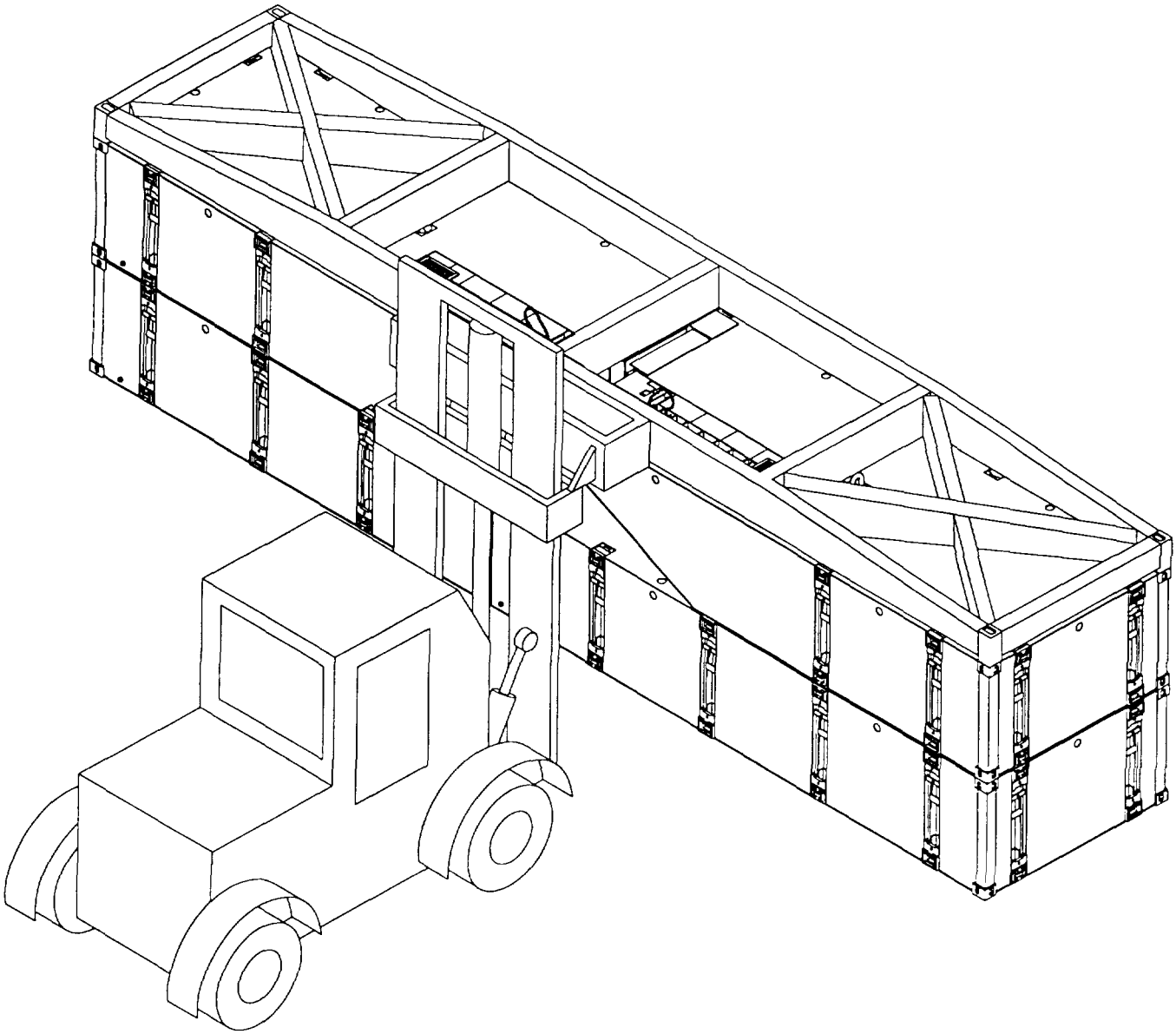

Figure 3-10. RTCH Lifting an ISOPAK.

3-6.7 MCF Weight and Capacity. Nominal weights for MCF modules are as shown in Table 3-2. MCF deck fittings can used to pull and align units together.

WARNING

Modules must never be lifted from deck fittings which only have a rated capacity of 30,000 pounds. To do so would present possible injury or death to personnel or severe damage to equipment. Lift shackles have a safe working load capacity of 25 tons.

CAUTION

Individual MCF modules maybe punctured and subject to flooding. Precautions should be taken prior to lifting from the water, such as sounding module compartments, to determine the additional weight to be hoisted.

Table 3-2. Module Nominal Weights.

Description	Nominal Weight (Pounds)	Weight Wet with Full Fuel Tank (Pounds)
End Rake, Right Hand Module	11,500	
End Rake, Left Hand Module	11,500	
End Rake, Center Module	10,600	
Center Module	22,500	
Combination Beach/Sea End Rake Module	13,600	
Propulsion Module	41,100	45,000
Powered Section	171,900	175,800
Intermediate Section	134,700	
Beach/Sea Section	141,900	
P3 Module	3,300	
Beach/Sea Section with P3 Adaptor	151,800	

APPENDIX A

REFERENCES

A-1. SCOPE

This appendix lists all Forms, Field Manuals, and Technical Manuals referenced in this manual.

A-2. FORMS

Recommended Changes to Publications and Blank Forms	DA Form 2028
Recommended Changes to Equipment Technical Publications	DA Form 2028-2
Equipment Inspection and Maintenance Worksheet	DA Form 2404
Product Quality Deficiency Report	SF-368

A-3. FIELD MANUALS

Watercraft Operator	FM 55-501
Watercraft Engineer	FM 55-509

A-4. TECHNICAL MANUALS

Lubrication Order, MCF	LO 55-1945-205-12
Unit Level, Direct Support and General Support Maint. Manual, MCF	TM 55-1945-205-24-1
Unit Level, Direct Support and General Support Maint. Manual, Diesel Engine	TM 55-1945-205-24-2
Unit Level, Direct Support and General Support Maint. Manual, Marine Trans	TM 55-1945-205-24-3
Unit Level, Direct Support and General Support Maint. Manual, Transfer Case	TM 55-1945-205-24-4
Repair Parts and Special Tools List for the MCF	TM 55-1945-205-24P
Destruction of Military Material to Prevent Enemy Use	TM 750-244-6
Painting of Vessels	TB 43-0144

A-5. MISCELLANEOUS

Pontoon System Manual	NAVFAC P-401
Material Deterioration Prevention and Control	DARCOM Reg 702-24
Army Corrosion Prevention and Control Program	AR 750-59
Watercraft Information and Reporting System (WIRS) Data Collection for Configuration Control	TB 55-1900-205-24
Floating Craft Preventive Maintenance	TB 55-1900-202-12/1
Guide to Army Watercraft Survey Inspections	TB 55-1900-201-45/1

APPENDIX B

COMPONENTS OF END ITEM (COEI) AND BASIC ISSUE ITEMS (BII) LISTS

Section I. INTRODUCTION

B-1. SCOPE

This appendix lists components of the end item and basic issue items for the Modular Causeway Ferry (MCF) to help you inventory the items for safe and efficient operation of the equipment.

B-2. GENERAL

The Components of End item (COEI) and Basic Issue Items (BII) Lists are divided into the following sections:

a. Section II, Components of End Item. This listing is for information purposes only, and is not authority to requisition replacements. These items are part of the Modular Causeway Ferry (MCF). As part of the end item, these items must be with the end item whenever it is issued or transferred between property accounts. Items of the COEI are removed and separately packaged for transportation or shipment when necessary. Illustrations are furnished to help you find and identify the items.

b. Section III, Basic Issue Items. These essential items are required to place the Modular Causeway Ferry (MCF) in operation, operate it, and to do emergency repairs. Although shipped separately packaged, BII must be with the MCF during operation and when it is transferred between property accounts. This list is your authority to request/requisition them for replacement based on authorization of the end item by the TOE/MTOE. Illustrations are furnished to help you find and identify the items.

B-3. EXPLANATION OF COLUMNS

a. In Section II, Components of End Item, column (1), Illus Number, indicates the corresponding number of the item illustrated. In Section III, Basic Issue Items Column (1), Item, provides a reference number only since no illustrations are included.

b. Column (2), National Stock Number, identifies stock number of the item to be used for requisitioning purposes.

c. Column (3), Description and Usable on Code, identifies the Federal item name (in all capital letters) followed by a minimum description when needed. The last line below the description is the Commercial and Government Entity Code (CAGEC) (in parentheses) and the part number.

d. Column (4), U/I (unit of issue), indicates how the item is issued for the National Stock Number shown in column two.

e. Column (5), Qty Reqd, indicates the quantity required.

Section II. COMPONENT OF END ITEM (COEI)				
(1) ILLUS NUMBER	(2) NATIONAL STOCK NUMBER	(3) DESCRIPTION CAGEC AND PART NUMBER	(4) U/I	(5) QTY REQ
1		ADAPTER, RADIO POWER (0GXD3), 2412	EA	1
2		ADAPTER, P3 (34712), E28063	EA	3
3		ANCHORBOARD ASSY (34712), E20053	EA	1
4		ANTENNA (23657), 5240	EA	1
5		ANTENNA (96906), GFE-3	EA	1
6		CAB, OPERATOR (34712), E02873	EA	1
7		CHARGER, RADIO BATTERY (0HTU4), HTN9630	EA	1
8		COMPASS (50967), HB-85	EA	1
9		CLEAT, MOORING (34712), E07723	EA	16
10		CONNECTOR, FLEXOR (34712), E02783	EA	6
11		D-RING, MOORING (34712), E07803	EA	40
12		FENDER ASSY (34712), E03103	EA	16
13		HORN, RHINO (34712), E07733	EA	3
14		INTERCONNECT, MODULE ELECTRICAL (34712), E03003	EA	1
15		KIT, HYDRAULIC TEST (34712), E28943	EA	1
16		MANUAL, LUBRICATION ORDER LO55-1945-205-12	EA	1
17		MANUAL, OPERATOR TM55-1945-205-10	EA	1
18		MANUAL, REPAIR PARTS & SPECIAL TOOLS LIST TM55-1945-205-24P	EA	1

Section II. COMPONENT OF END ITEM (COEI) (CONT'D)				
(1) ILLUS NUMBER	(2) NATIONAL STOCK NUMBER	(3) DESCRIPTION CAGEC AND PART NUMBER	(4) U/I	(5) QTY REQ
19		MANUAL, UNIT DS & GS MAINT TM55-1945-205-24-1, MCF	EA	1
20		MANUAL, UNIT DS & GS MAINT TM55-1945-205-24-2, DIESEL ENGINE	EA	1
21		MANUAL, UNIT DS & GS MAINT TM55-1945-205-24-3, MARINE GEAR	EA	1
22		MANUAL, UNIT DS & GS MAINT TM55-1945-205-24-4, TRANS CASE	EA	1
23		MAST ASSEMBLY, MAIN (34712), E03123	EA	1
24		MAST ASSEMBLY, STUB (34712), El 8343	EA	1
25		MODULE, P25B BEACH END (34712), E02853	EA	3
26		MODULE, PROPULSION, P40P (34712), E28043	EA	2
27		PLENUM, EXHAUST (34712), E18263	EA	2
28		PLENUM, INTAKE (34712), E12183	EA	1
29		PONTOON, P20CR (34712), E02823	EA	7
30		PONTOON, P20LR (34712), E02833	EA	7
31		PONTOON, P20RR (34712), E02813	EA	7
32		PONTOON, P40 (34712), E02803	EA 10	
33		RADIO (96906), GFE-1	EA	1
34		RAILING INSTALLATION (34712), E03136	EA	1
35		RECEIVER/TRANSMITTER (0HTU4), H5111	EA	1
36		RECEIVER/TRANSMITTER (0WF67), DSC 500	EA	1
37		REMOTE AND MICROPHONE (96906), GFE-2	EA	1

Section II. COMPONENT OF END ITEM (COEI) (CONT'D)				
(1) ILLUS NUMBER	(2) NATIONAL STOCK NUMBER	(3) DESCRIPTION CAGEC AND PART NUMBER	(4) U/I	(5) QTY REQ
38		SPREADER ASSEMBLY (34712), E19883	EA	1

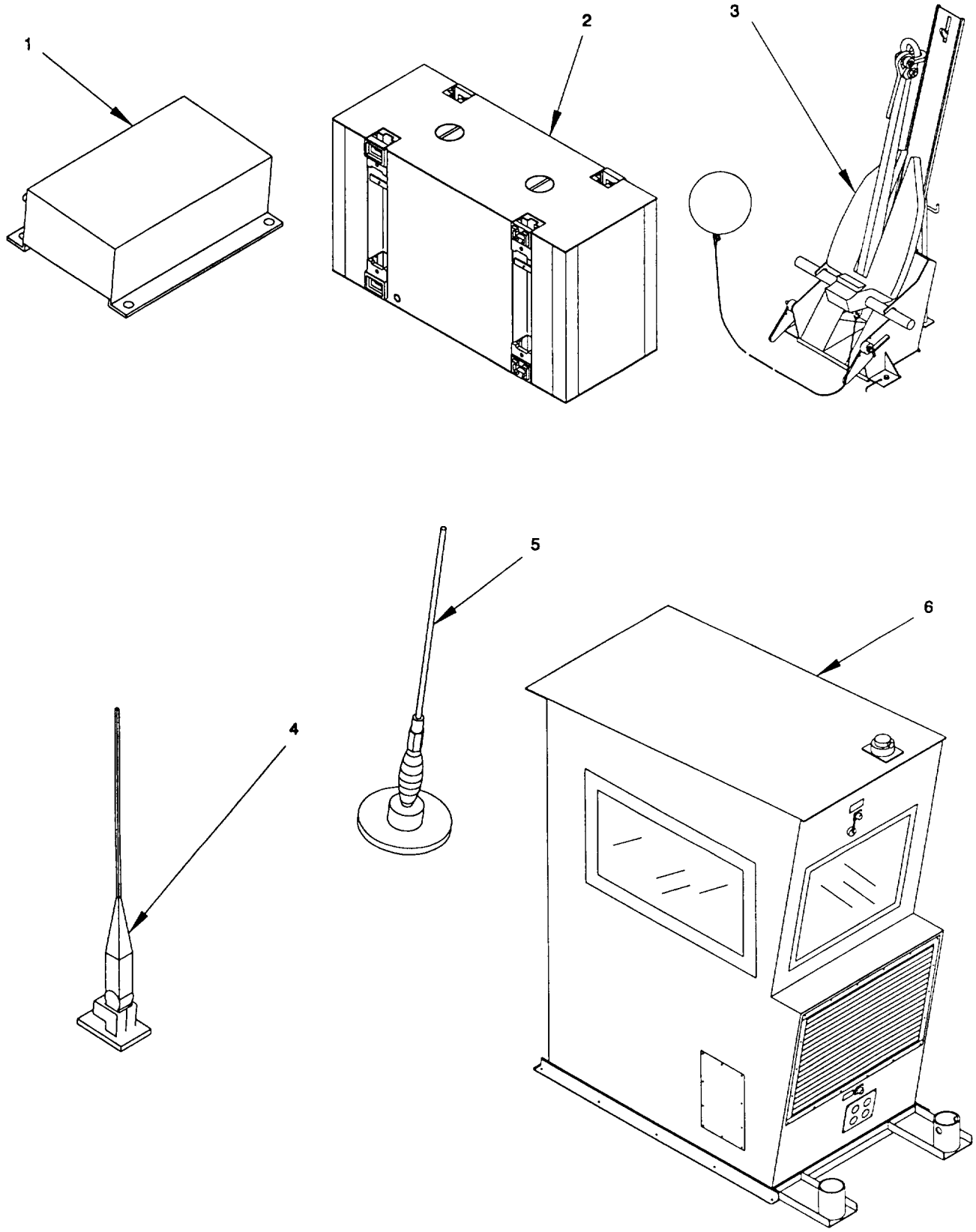

Figure B-1. Components of the End Item (COEI) (Sheet 1 of 5).

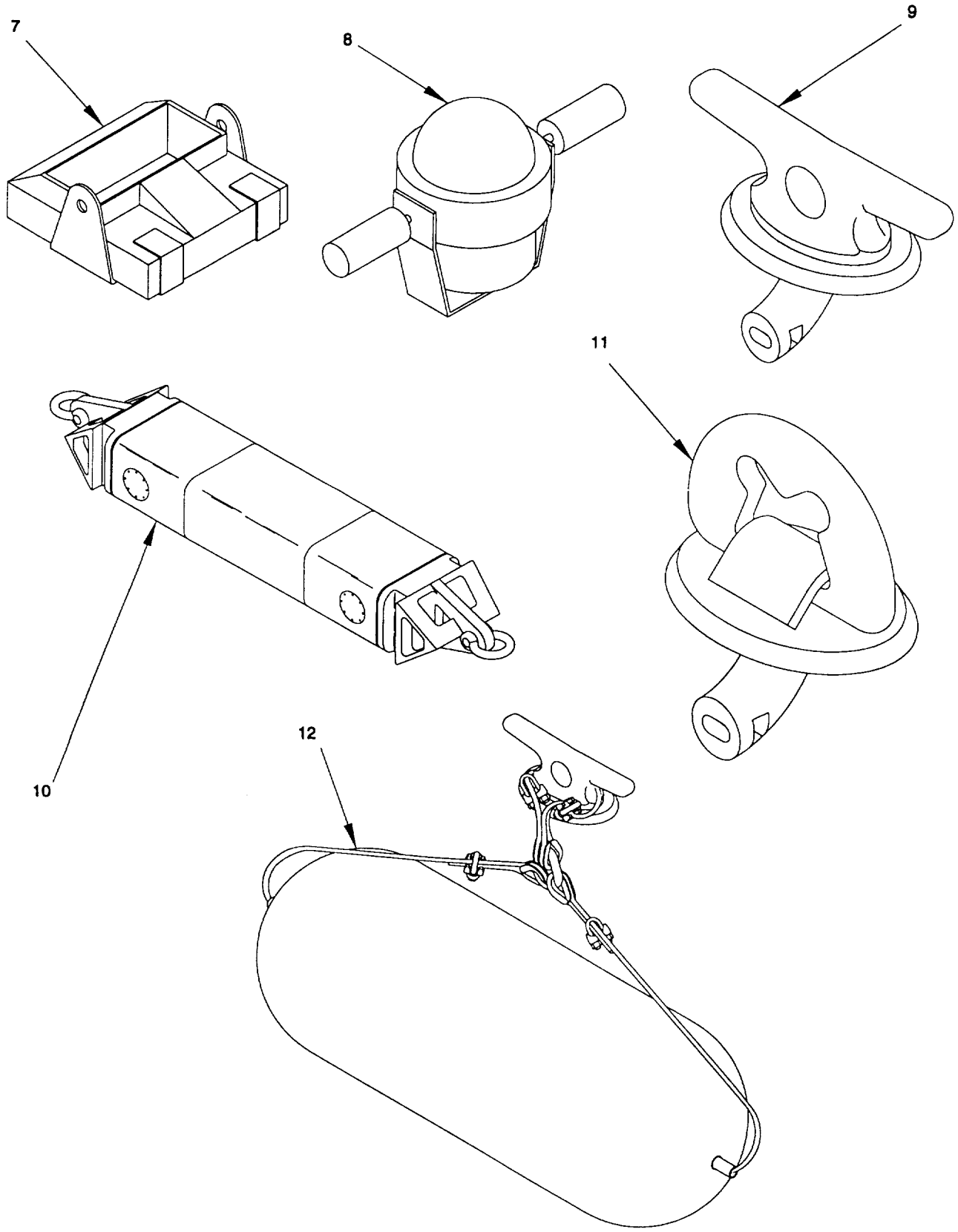

Figure B-1. Components of the End Item (COEI) (Sheet 2 of 5).

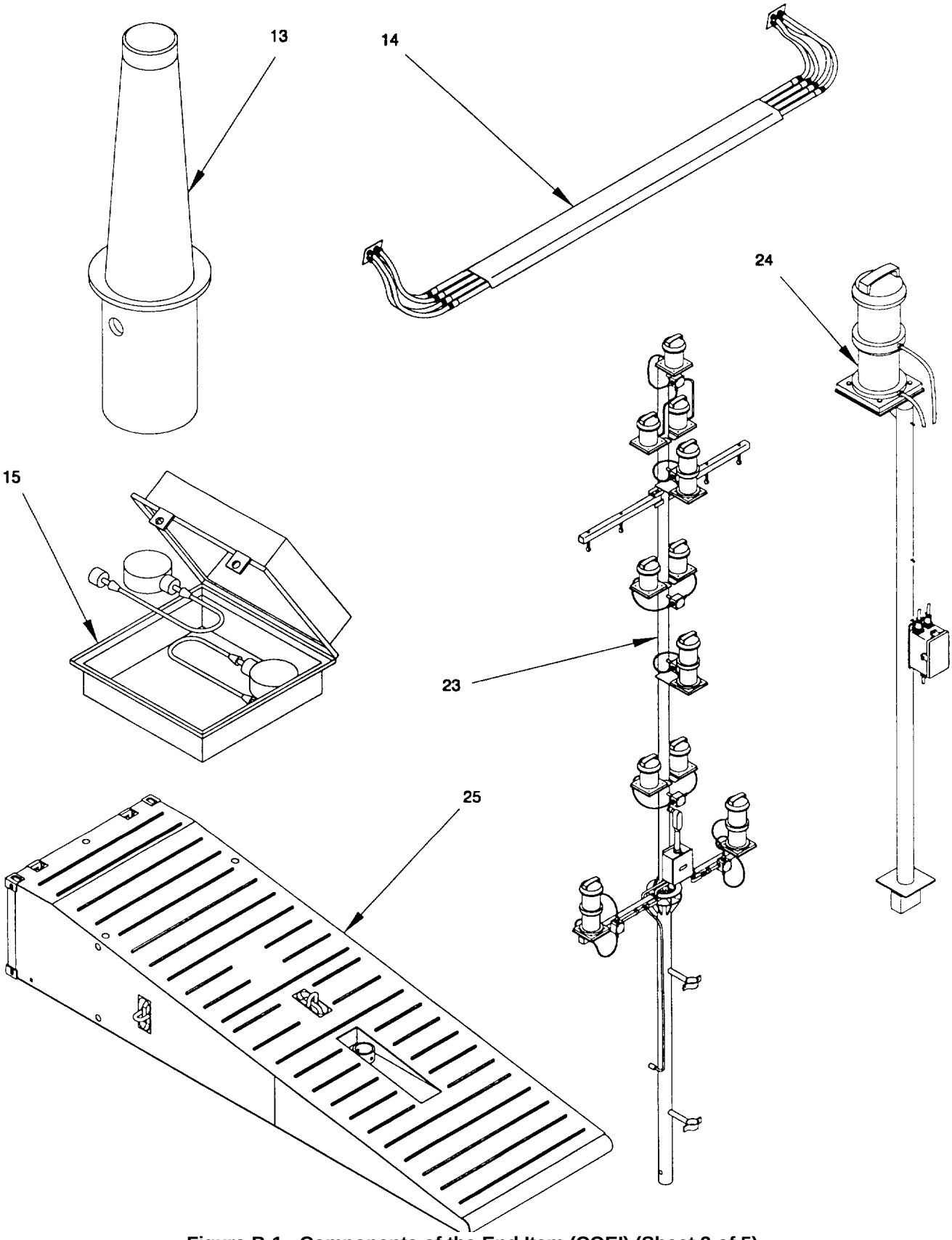

Figure B-1. Components of the End Item (COEI) (Sheet 3 of 5).

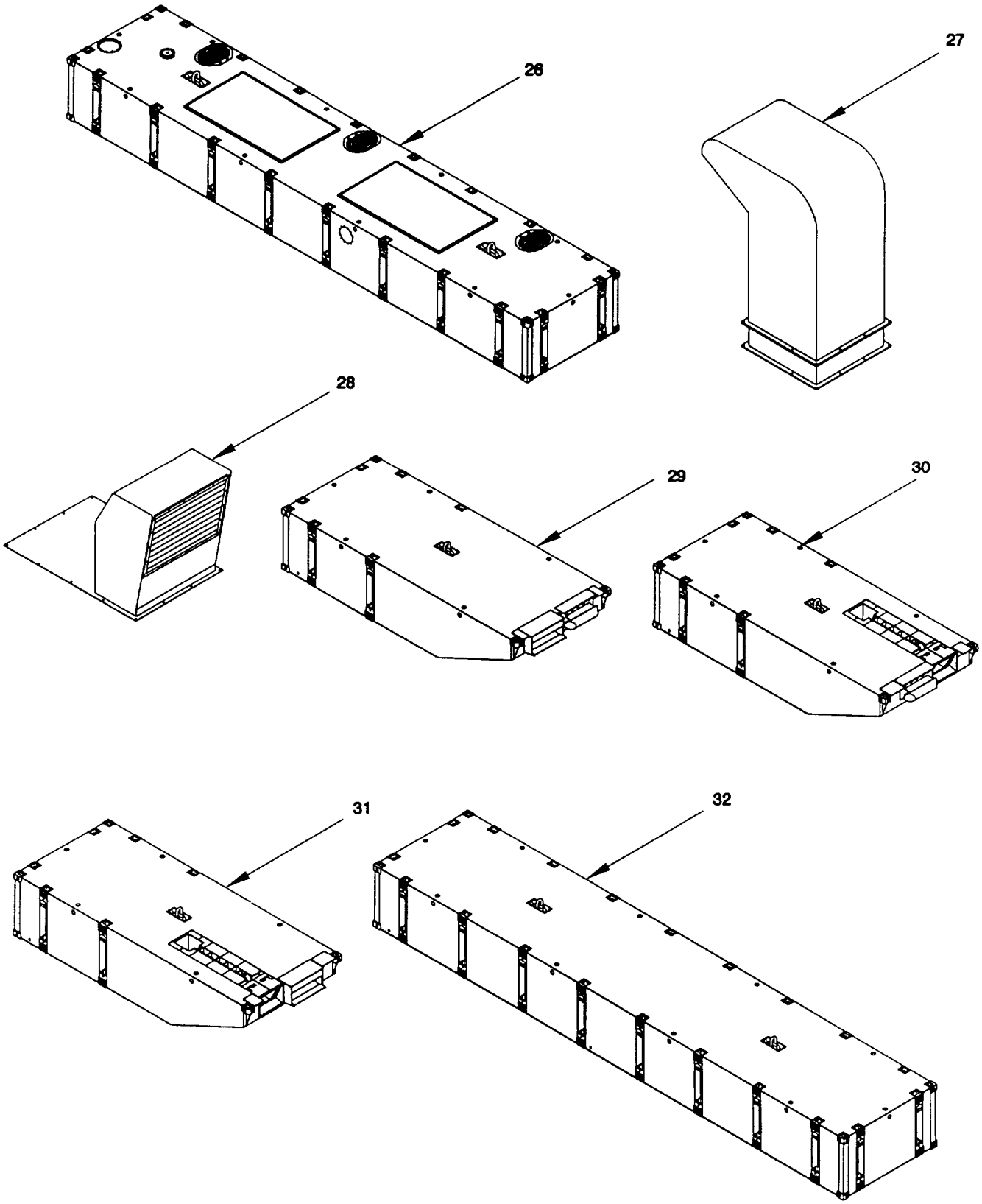

Figure B-1. Components of the End Item (COEI) (Sheet 4 of 5).

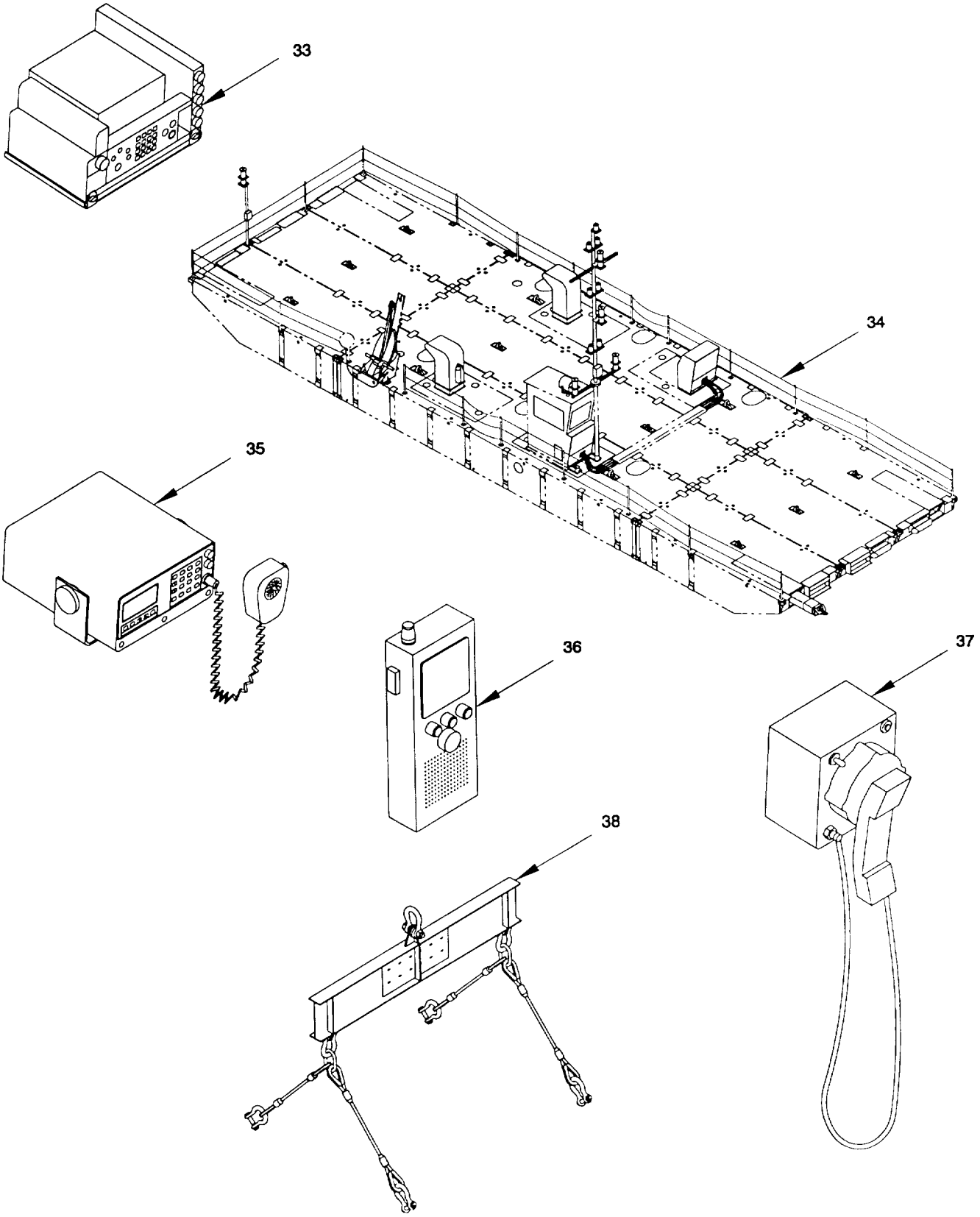

Figure B-1. Components of the End Item (COEI) (Sheet 5 of 5).

Section III. BASIC ISSUE ITEMS LIST (BIIL)				
(1) ITEM NUMBER	(2) NATIONAL STOCK NUMBER	(3) DESCRIPTION CAGEC AND PART NUMBER	(5) U/M	(6) QTY RQD
1	8415-00-082-6108	Apron, Battery Service	EA	2
2	4210-00-142-4949	Ax, Fire (81348) GGG-A-926	EA	1
3	5120-00-242-0762	Bar, Wrecking, 36 In. Long (81348) GGG-B-101	EA	2
4	6135-00-643-1310	Battery, Nonrechargeable, 6V (Battle Lantern) (83740) EV90	EA	6
5	6135-00-930-0030	Battery, Flashlight, Size "D", Alkaline (80058) BA3030	BX	1
6	Local Purchase Item-Water-Jel AWK Fire Blanket, H&H Associates Inc., P.O. Box 4496, Alexandria, VA 22303, Phone 1-800-326-5708	Blanket, Fire, 72" X 60"	EA	1
7	5340-00-275-4583	Clips, Halyard	BOX	2
8	Local Purchase Item-Lifesaving Systems Corp., 720 4th St. SW, Ruskin, FL 33570-1829, Phone 813-645-2768	Coverall, Antiexposure, Sterns Model 1FS-580, Orange (1 per crew member)	EA	6
9	5120-00-224-1390	Crowbar, Wedge Point, 60 In. Long	EA	2
10	Local Purchase Item-Water-Jel AWK Kit, H&H Associates, Inc. P.O. Box 4469, Alexandria, VA 22303 Phone 1-800-326-5708	Dressing, Burn, Kit (contains 2/8" X 18", 1/4" X 16", 4/4" X 4", 1/1 2" X 16" [Face Mask] dressings, and 1 package of Burn-Jel topical dressing	EA	1
11	4210-00-203-0217	Extinguisher, Fire, Portable, 15 lbs. CO_2 capacity (33525)466182	EA	3
12	4220-00-542-2048	Faceshield, Safety (1 per crew member)	EA	6
13		Fast Lube Oil Change System (FLOCS), Pump and Hoses	EA	1
14	5120-00-223-8921	Fid, 12 inch Wood	EA	2

Section III. BASIC ISSUE ITEMS LIST (BIIL) (CONT'D)				
(1) ITEM NUMBER	(2) NATIONAL STOCK NUMBER	(3) DESCRIPTION CAGEC AND PART NUMBER	(5) U/M	(6) QTY RQD
15	8345-00-935-0445	Flag, Signal, "A" Intn'l Code, Size 6 (81349) MIL-F-2692	EA	1
16	8345-00-926-6803	Flag, Signal, "B" Intn'l Code, Size 6 (81349) MIL-F-2692	EA	1
17	8345-00-935-0451	Flag, Signal, "O" Intn'l Code, Size 6 (81349) MIL-F-2692	EA	1
18	8345-00-926-6814	Flag, Signal, "U" Intn'l Code, Size 6 (81349) MIL-F-2692	EA	1
19	8345-00-935-0455	Flag, Signal, "V" Intn'l Code, Size 6 (81349) MIL-F-2692	EA	1
20	8345-00-935-0456	Flag, Signal, "W" Intn'l Code, Size 6 (81349) MIL-F-2692	EA	1
21	8345-00-935-0457	Flag, Signal, "Y" Intn'l Code, Size 6 (81349) MIL-F-2692	EA	1
22	6230-00-264-8261	Flashlight, Watertight (81349) MIL-F-3747	EA	2
23	8415-00-266-8677	Gloves, Chemical Battery Service	PR	2
24	8415-01-267-9661	Gloves, Anti-Flash (1 pair per crew member) (81349) MIL-G-2874	PR	6
25	8415-00-634-4658	Gloves, Leather Palm (1 pair per crew member) (58536) A-A-50021	PR	6
26	8415-00-266-8691	Gloves, Electric (1 pair per crew member) (81 348) ZZ-G-401	PR	6
27	4240-00-052-3776	Goggle, Clear Lens, Chipping (1 per crew member)	EA	6
28	4240-00-190-6432	Goggle, Industrial, No Vents (Chemical Splash)(1 per engineer) (58536) A-A-110	EA	2
29	8465-01-004-2893	Goggle, Safety, Wind, Dust, Sand, Spray (1 per crew member) (81349) MIL-G-43914	EA	6

Section III. BASIC ISSUE ITEMS LIST (BIIL) (CONT'D)				
(1) ITEM NUMBER	(2) NATIONAL STOCK NUMBER	(3) DESCRIPTION CAGEC AND PART NUMBER	(5) U/M	(6) QTY RQD
30	5120-00-243-2957	Hammer, Sledge, 10 lb	EA	2
31	8415-00-279-2205	Hard hat, Blue (58346) A-A-2269 Type 2 Class A Style A	EA	2
32	8415-00-823-7575	Hard hat, Brown (58346) A-A-2269 Type 2 Class A Style A	EA	4
33	4240-00-022-2522	Harness, Safety, Torso (80204) ANSI Z359.1	EA	6
34	2040-00-268-9250	Hook, Boat, 10 ft Handle (21530) H389	EA	2
35	Local Purchase Item GEN367C	Kit, Lockout/Tagout, Pig	EA	1
36	4730-00-542-3359	Kit, Pipe Repair, Emergency (81349) MIL-4-17882B	EA	1
37	6230-00-783-6519	Lantern, Battle, SYM 100.2, with red filter, Body Assembly (62025A), M1 6377/53-001	EA	1
38	6230-00-783-6519	Lantern, Battle, SYM 100.2, no filter, Body Assembly (62025A), Ml 6377/53	EA	2
39	6230-00-776-5920	Lantern, Battle, SYM 100.2, Handle and Switch	EA	3
40	4240-00-022-2518	Lanyard, Safety Harness (80204) ANSI Z359.1	EA	6
41	6260-01-086-8077	Light, Distress, Personnel Marker (83239) 2172-A-1	EA	24
42	4020-00-240-2161	Line, Halyard, Nylon, 1/4 inch x 300 ft	EA	1
43	4020-01-344-0552	Line, Heaving, Safety, 100 ft (OGU87) NIS-G-0213	EA	2
44	4020-00-530-0698	Line, Retrieving, Ring Bouy (81349) MIL-R-24049	RL	1
45	5120-00-255-1476	Maul, Ship's. 5 lb. (Damage Control Plugs) (58536) A-A-1285	EA	1
46		Pneumatic Test Set-Up	EA	1
47	5510-00-260-8949	Plug, Soft Wood, 10" X 7" X 12" Long (80064) S8800-461043	EA	5

Section III. BASIC ISSUE ITEMS LIST (BIIL) (CONT'D)				
(1) ITEM NUMBER	(2) NATIONAL STOCK NUMBER	(3) DESCRIPTION CAGEC AND PART NUMBER	(5) U/M	(6) QTY RQD
48	5510-00-260-8973	Plug, Soft Wood, 8" X 4" X 10" Long (80064) S88000-461043	EA	5
49	5510-00-260-8969	Plug, Soft Wood, 7" X 3" X 10" Long (80064) 803-461043	EA	5
50	5510-00-260-8953	Plug, Soft Wood, 1" X 0" X 3" Long (80064) 803-461043	EA	5
51	5510-00-260-8958	Plug, Soft Wood, 2" X 0" X 4" Long (80064) S8800-461043	EA	5
52	5510-00-260-8952	Plug, Soft Wood, 3" X 0" X 8" Long (80064) 803-461043	EA	5
53	4220-00-200-C038	Preserver, Life, Inherently Buoyant, Vest Type w/Collar (1 per crew member) (81349) MIL-L-18045	EA	8
54	4220-00-276-8926	Preserver, Life, Vest (1 per crew member) (81349) MIL-L-7653	EA	8
55	4240-00-022-2946	Protector, Aural, Sound (1 per crew member) (71483) E31C	EA	6
56		Pump. AOAP Sampling	EA	1
57	8345-01-101-1101	Shape, Day Maritime, Diamond, Black, 2 ft. dia., 4 ft. Long (81349) MIL-S-29134	EA	1
58	8345-00-174-0453	Shape, Day Maritime, Ball, Black, 2 ft. dia., 4 ft. Long (81349) MIL-S-29108	EA	2
59	2090-00-058-3737	Shoring, Steel, Adjustable, Short, 3 ft. to 5 ft. (81349) MIL-S-23965	EA	4
60	1370-01-030-8330	Signal, Distress, Orange Smoke, Red Illumination (10001) DL3139734	EA	12
61	9390-01-078-8660	Tape, Retroreflective, 3" X 50 yds, Adhesive Backed (94960) 3150-3X50YD	RL	1

Section III. BASIC ISSUE ITEMS LIST (BIIL) (CONT'D)				
(1) ITEM NUMBER	(2) NATIONAL STOCK NUMBER	(3) DESCRIPTION CAGEC AND PART NUMBER	(5) U/M	(6) QTY RQD
62	5180-00-629-9783	Tool Kit, Marine and Rail	EA	1
63	5510-00-268-3479	Wedge, Plug, Tapered, Hardwood, 2" X 2" X 8" Long (80064) S8800-461043	EA	5
64	5510-00-268-3475	Wedge, Shoring, Tapered, Hardwood, 1 1/2" X 2" X 12" Long (80064) S8800-461043	EA	5
65	8465-00-254-8803	Whistle, Plastic Ball w/Lanyard (58536) A-A-55106	EA	24

APPENDIX C

ADDITIONAL AUTHORIZATION LIST (AAL)

Section I. INTRODUCTION

C-1. SCOPE

This appendix lists additional items you are authorized for the support of the Modular Causeway Ferry (MCF)

C-2. GENERAL

This list identifies items that do not have to accompany the MCF and do not have be turned in with the MCF. These are authorized to you by MTOE, TDA, CTA, or JTA.

C-3. EXPLANATION OF COLUMNS

a. Column (1), National Stock Number, identifies stock number of the item to be used for requisitioning purposes.

b. Column (2), Description and Usable on Code, identifies the Federal item name (in all capital letters) followed by a minimum description when needed. The last line below the description is the Commercial and Government Entity Code (CAGEC) (in parentheses) and the part number. If the item required differs for different models of this equipment, see the "Used on Code" column for the applicable model or models. Codes used are:

USED ON CODE	MODEL
FKY	(TBD)

c. Column (3), U/I (unit of issue), indicates how the item is issued for the National Stock Number shown in column one.

d. Column (4), Qty Recm, indicates the quantity recommended.

Section II. ADDITIONAL AUTHORIZATION LIST			
(1) NATIONAL STOCK NUMBER	(2) DESCRIPTION USED CAGEC AND PART NUMBER ON CODE	(3) U/I	(4) QTY RECM
5120-00-776-1840	Wrench, Strap, 1"-6" Capacity	EA	1
5120-00-277-3020	Wrench, Monkey, 3-15/16" Capacity	EA	1
	Wrench, Filter	EA	1

APPENDIX D

EXPENDABLE/DURABLE SUPPLIES AND MATERIALS LIST

Section I. INTRODUCTION

D-1. SCOPE

This appendix lists expendable/durable supplies and materials you will need to operate and maintain the Modular Causeway Ferry (MCF). These items are authorized to you by CTA 50-970, Expendable/Durable Items (Except Medical, Class V, Repair Parts, and Heraldic Items).

D-2. EXPLANATION OF COLUMNS

a. Column 1 - Item Number. This number is assigned to the entry in the listing and is referenced in the narrative instructions to identify the material (e.g., "Cleaning solvent P-D-680 (Appendix C, item 2)").

b. Column 2 - Level. This column identifies the lowest level of maintenance that requires the listed item. The symbol designations are as follows:

C Operator or crew
O Unit Level maintenance
F Direct Support
H General Support

c. Column 3 - National Stock Number. This is the National stock number assigned to the item; use it to request or requisition the item.

d. Column 4 - D Indicates the Federal item name and, if required, a description to identify the item. The last line for each item indicates the Commercial and Government Entity (CAGE) code in parentheses followed by the part number.

e. Column 5 - Unit of Measure (U/M). Indicates the measure used in performing the actual maintenance function. This measure is expressed by a two-character alphabetical abbreviation (e.g., ea, in, pr). If the unit of measure differs from the unit of issue, requisition the lowest unit of issue that will satisfy your requirements.

Section II

EXPENDABLE/DURABLE SUPPLIES AND MATERIALS LIST					
END ITEM ACRONYM	**ITEM NAME**	**START LCN**	**ALC**	**STOP LCN**	**UOC**
MCF	MCF GENL ARR	A			
ITEM NUMBER	**LEVEL**	**NATIONAL STOCK NUMBER**	**DESCRIPTION, FSCM AND REF NUMBER**		**U/M**
1	O	8030-01-126-9460	Adhesive (05972) #222, MIL-S-46163A, Type II, Grade M		EA
2	O	8040-01-250-3969	Adhesive (05972) #242, MIL-S-46163A, Type II, Grade N		EA
3	O		Adhesive, Epoxy ( ) ETS-608		EA
4	O	8040-01-194-0391	Adhesive, Silicone (71984) RTV-732		EA
5	O	 6850-00-181-7929 6850-00-181-7933	Antifreeze, Ethylene Glycol, (81349) ASTM-D4985 1 gallon container 5 gallon container		 GL GL
6	O	7920-01-088-5188	Brush, Soft Bristle (53800) 30G14493		EA
7	O	7920-00-044-9281	Cloth, Cleaning (81349) MIL-C-85043		LB
8	O	7920-00-292-9204	Cloth, Cleaning, extra heavy (80244) A-A-162, Type I, Class 2		MX
9	C	8030-00-209-8005	Compound, Antiseize (81348) TT-S-1732 (M22361)		OZ
10	C, O	6850-00-926-2275	Compound, Cleaning, windshield washer, 1 pint (81348) O-C-1901		PT
11	C		Compound, Rust Preventative (81349), MIL-C-16173, Grade 2		
12	H		Compound, Sealing (05972) 598		EA
13	C		Compound, Silicone (81349), MIL-C-21567 or commercial equivalent		EA

Section II

EXPENDABLE/DURABLE SUPPLIES AND MATERIALS LIST					
END ITEM ACRONYM	**ITEM NAME**	**START LCN**	**ALC**	**STOP LCN**	**UOC**
MCF	MCF GENL ARR	A			
ITEM NUMBER	**LEVEL**	**NATIONAL STOCK NUMBER**	**DESCRIPTION, FSCM AND REF NUMBER**		**U/M**
14	O	5970-00-241-5406	Compound, Thermal Joint (05820) 120-8		OZ
15	O	7930-00-282-9699	Detergent, General Purpose, 1 gallon (80244) MIL-D-16791 Type I		GL
16	O	6810-00-236-0702 6810-00-904-9372	Electrolyte, Acid, Sulfuric (81348) O-S-801 Class III 1 gallon 5 gallons		GL GL
17	O	9150-00-993-6621	Fluid, Hydraulic, Mobil DTE 25 (19135) 60263-1		GL
18	C	9150-00-145-0268	Grease, Aircraft (81349) MIL-G-81322		CN
19	O	9150-00-985-7246	Grease, Aircraft and Instrument (81349) MIL-G-23827		LB
20	C, O	9150-00-929-7946	Grease, Lubriplate (73219) 1200-2		TU
21	O		Grease, Mobilux Grade No 2 or equivalent E.P. Grease, NLGI grade 2 (19135) 64127-4		TU
22	F	9150-01-080-9652	Grease, Silicone (81349) MIL-L-15719		EA
23	O	9150-00-530-6814	Grease, Wire Rope, (81349) MIL-G-18458		CN
24	C	6850-00-003-5295	Lubricant, Compound, Cleaning (81349) MIL-C-83360		CN
25	C		Oil, Light Lubricating, General Purpose (81348) VV-L-820		PT
26	C, O	9150-01-035-5393	Oil, Lubricating, Gear		CN
27	H		Oil, Lubricating, GO 80W90 (81349) MIL-L-2105		EA

Section II

EXPENDABLE/DURABLE SUPPLIES AND MATERIALS LIST					
END ITEM ACRONYM	**ITEM NAME**	**START LCN**	**ALC**	**STOP LCN**	**UOC**
MCF	MCF GENL ARR	A			
ITEM NUMBER	**LEVEL**	**NATIONAL STOCK NUMBER**	**DESCRIPTION, FSCM AND REF NUMBER**		**U/M**
28	O		Oil, Mobilgear 626 (19135) 61085-7		QT
29	O		Oil, Mobilgear 629 (19135) 61086-5		QT
30	O	9150-00-261-7899	Oil, Penetrating (81348) W-P-216		EA
31	O		Oil, SAE Grade 30, Mobil Delvac 1230 (if operating below 0° F.) (19135) 44067-7		PT
32	O	9150-01-219-3276	Oil, SAE Grade 50, Mobil Delvac 1250 (if operating above 0° F.) (19135) 44097-4		PT
33	O		Oil, SAE 40, API Class CD-II,, Sulfated Ash less than 1.0%, Mobil Delvac 1340, MIL-L-2104D (19135) 44073-5		QT
34	C		Paint, Amercoat 385 PA Oxide Red Primer (09869) 373-930		GL
35	C		Paint, Amercoat 385 #27 Haze Grey (09869) 353-070		GL
36	C		Paint, Amercoat 385 AS Mid Graphite Grey (09869) 372-130		GL
37	C		Paint, Amercoat 385 Black (09869) 994-086		GL
38	C		Paint, Enamel, Yellow (17833) TTE-490		GL
39	C		Paint, Primer, Red Oxide (17833) TTP-664, #13538		GL
40	C, O	8030-00-204-9149	Sealant, Pipe Thread, 50 ML Tube, (05972) #592		EA

Section II

EXPENDABLE/DURABLE SUPPLIES AND MATERIALS LIST					
END ITEM ACRONYM	**ITEM NAME**	**START LCN**	**ALC**	**STOP LCN**	**UOC**
MCF	MCF GENL ARR	A			
ITEM NUMBER	**LEVEL**	**NATIONAL STOCK NUMBER**	**DESCRIPTION, FSCM AND REF NUMBER**		**U/M**
41	O		Sealant, RTV Silicone, Tube (4M493) #6BC		EA
42	O	8030-00-339-0310	Sealant, Thread, 50 ml bottle (05972)56931		EA
43	O		Sleeve, Solder (63590) LSSS-300		EA
44	O	6505-00-055-9422	Soda, Baking (Sodium Bicarbonate) (60060) NDC00074-4103-03		OZ
45	O		Solvent, dry cleaning P-D-680 Type II (58536) A-A-71		
		6850-00-664-5685	1 quart container		QT
		6850-00-264-9038	1 gallon can		GL
		6850-00-274-5421	5 gallon drum		GL
		6850-00-285-8011	55 gallon drum		GL
46	O	8030-00-889-3535	Tape, Teflon, ½ In (81348) MIL-T-27730		RL
47	C		Thinner, Paint, Amercoat #65 or equivalent 09869 100-120		GL
48	O	5970-01-124-7344	Tubing, Heat Shrink (06090) MIL-LT-1/4		FT
49	O	5970-01-124-8565	Tubing, Heat Shrink (06090) MIL-LT-3/8		FT
50	O	5970-01-101-7407	Tubing, Heat Shrink (75037) EPS-200 1-1/2		FT
51	O		Tubing, Heat Shrink (75037) EPS-200 2		FT
52	C	6810-00-297-9540	Water, Distilled, 5 gallons (96906) MS36300-5		GL
53	O	9330-01-250-2958	Wrap, Spiral (06383)..... T50N		EA

Section II

EXPENDABLE/DURABLE SUPPLIES AND MATERIALS LIST					
END ITEM ACRONYM	**ITEM NAME**	**START LCN**	**ALC**	**STOP LCN**	**UOC**
MCF	MCF GENL ARR	A			
ITEM NUMBER	**LEVEL**	**NATIONAL STOCK NUMBER**	**DESCRIPTION, FSCM AND REF NUMBER**		**U/M**
54	O	9330-01-311-3859	Wrap, Spiral (06383)T25N		EA
55	O	E24628-3	Wrap, Tie, Nylon, .140 X 11.10 (56501) TY526MX		Bdl
56	H	8010-01-349-8055 8010-01-380-3306	Zinc, Inorganic, No. 531 0N4K0 (IC531) 4 Gallon Package 1 Gallon Package		GL

APPENDIX E

TORQUE TABLES

E-1. INTRODUCTION

Table E-1 below contains a standard torque table to be utilized for torquing all SAE fasteners when specific torques are not provided. Use torque values in Table E-2 for metric fasteners when specific torque values are not provided.

Table E-1. Standard SAE Torque Table.

CAPSCREW/BOLT DIAMETER (INCHES)	S.A.E. 2 ASTM A-307 (FT/LBS)	S.A.E. 5 ASTM A-449 (FT/LBS)	S.A.E. 7 (FT/LBS)	S.A.E. 8 (FT/LBS)
3/8	13 - 15	20 - 23	26 - 30	30 - 35
7/16	21 - 24	30 - 35	38 - 45	47 - 55
1/2	31 - 35	47 - 55	59 - 70	68 - 80
5/8	66 - 75	95 - 110	120 - 140	148 - 170
3/4	115 - 130	175 - 200	205 - 240	245 - 280
7/8	110 - 125	285 - 320	345 - 400	400 - 460
1	160 - 190	430 - 480	520 - 600	590 - 680
1-1/8	220 - 270	525 - 600	710 - 840	825 - 960
1-1/4	315 - 380	735 - 840	950 - 1100	1160 - 1360
1-3/8	410 - 490	955 - 1100	1310 - 1560	1530 - 1780
1-1/2	550 - 650	1285 - 1460	1830 - 2080	2060 - 2360
1-3/4	960 - 1160	2300 - 2600	3250 - 3750	3300 - 3900
2	1400 - 1680	3300 - 3750	4675 - 5425	4870 - 5670

NOTES:

1. Tightening torque ranges for UNC capscrews and bolts.
2. Values are maximum and minimum torque in foot-pounds.
3. Torque values are for plated steel capscrews or when lubrication is used for assembly of capscrews. (If possible, all bolts which are to be torqued should be plated or lubricated.)
4. If Lubrication or plating cannot be used, increase above torque values by 15 percent.
5. Grade 5 and grade 8 bolts need hardened plate washers.

Use the proper torque settings in Table E-2 for metric fasteners when specific torque values are not provided.

Table E-2. Metric Torque Table in Newton-Meters (ft/lbs in parentheses).

CAPSCREW/BOLT SIZE	Strength			Strength		
	8.8	**10.9**	**12.9**	**A4-70**	**A4-80**	**C3-80**
M 4	2,8 (2.06)	4,1 (3.06)	4,8 (3.54)	2,2 (1.62)	2,9 (2.14)	3,1 (2.28)
M 5	5,5 (4.05)	8,1 (5.97)	9,5 (7.00)	4,3 (3.17)	5,7 (4.20)	6,1 (4.50)
M 6	9,5 (7.00)	14 (10.32)	16,5 (12.16)	7,3 (5.38)	9,8 (7.22)	10,4 (7.66)
M 7	15,5 (11.42)	23 (16.95)	27 (19.90)	12 (8.84)	16 (11.79)	17 (12.53)
M 8	23 (16.95)	34 (25.06)	40 (29.48)	17 (12.53)	23 (16.95)	25 (18.43)
M 10	46 (33.90)	68 (50.12)	79 (58.22)	35 (25.80)	48 (35.38)	51 (37.59)
M 12	79 (58.22)	117 (86.23)	135 (99.50)	60 (44.22)	82 (60.43)	87 (64.12)
M 14	125 (92.13)	185 (136.35)	215 (158.46)	98 (72.23)	130 (95.81)	140 (103.18)
M 16	195 (143.72)	280 (206.36)	330 (243.21)	150 (110.55)	200 (147.40)	215 (158.46)
M 18	280 (206.36)	390 (287.43)	460 (339.02)	210 (154.77)	280 (206.36)	300 (221.10)
M 20	390 (287.43)	560 (412.72)	650 (479.05)	300 (221.10)	405 (298.49)	430 (316.91)
M 22	530 (390.61)	750 (552.75)	880 (648.56)	225 (165.83)	•545 (401.67)	580 (427.46)
M 24	670 (493.79)	960 (707.52)	1120 (825.44)	290 (213.73)	•695 (512.22)	740 (545.38)
M 27	1000 (737.00)	1400 (1031.80)	1650 (1216.05)	430 (316.91)	•1030 (759.11)	1100 (810.70)
M 30	1350 (994.95)	1900 (1400.30)	2250 (1658.25)	585 (431.15)	•1400 (1031.80)	1500 (1105.50)
M 33	1850 (1363.45)	2600 (1916.20)	3000 (2211.00)	-	•1875 (1381.88)	2000 (1474.00)
M 36	2350 (1431.95)	3300 (2432.10)	3900 (2874.30)	-	•2450 (1805.65)	2600 (1916.20)
M 39	3000 (2211.00)	4300 (3169.10)	5100 (3758.70)	-	•3190 (2351.03)	3400 (2505.80)

• Denotes diameters exceeding M 20. These require a special agreement on the mechanical strength properties between client and manufacturer.

APPENDIX F

MODULAR CAUSEWAY FERRY (MCF)

1945-01-398-3856

References: TM 55-1945-205-10
TM 55-1945-205-24-1
TM 55-1945-205-24-2
TM 55-1945-205-24-3
TM 55-1945-205-24-4
TB43-0210
DA PAM 738-750

REPORTING OF ERRORS

You can help improve this publication. If you find any mistakes or if you know of a way to improve the procedure, please let us know. Mail your letter, DA Form 2028 (Recommended Changes to Publications and Blank Forms, or DA Form 2028-2 located in the back of this manual, to: Commander, US Army Aviation and Troop Command, ATTN: AMSAT-1-MP, 4300 Goodfellow Boulevard, St. Louis, MO 63120-1798. A reply will be furnished directly to you.

NOTES

This LO is for crew (C) or unit (0) maintenance. Lube intervals (on-condition or hard time) are based on normal operation. Lube more during constant use, and less during inactive periods. Use correct grade of lubricant for seasonal temperature expected.

Oil filters shall be serviced/cleaned/changed as applicable, when:

a. They are known to be contaminated, or clogged;
b. Service is recommended by AOAP laboratory analysis, or
c. At prescribed hardtime intervals.

Engine oil/transmission oil/hydraulic fluids must be sampled at 150 hour intervals as prescribed by TM 55-1945-205-24-1, TM 55-1945-205-24-2, TM 55-1945-205-24-3 and TM 55-1945-205-24-4..

Clean parts with dry cleaning solvent (SD), type II, or equivalent. Use cleaning compound solvent (RBC) on powder-fouled parts. Dry before lubricating. DO NOT use fluid or semi-fluid lubricant on SFD lubricated surface. Wipe surface dry before you start your lube service.

ALWAYS	NEVER
a. Clean grease fittings before lubrication	a. Use wrong type/grade grease.
b. Use the lubrication order as your guide.	b. Use too much lubricant.

DISTRIBUTION STATEMENT C - Distribution authorized to US Government agencies and their contractors. This publication is required for administration and operational purposes, as determined 2 February 1987. Other requests for this document shall be referred to Commander, US Army ATCOM, 4300 Goodfellow Blvd., St. Louis, MO, 63120-1798.

DESTRUCTION NOTICE - For unclassified, limited documents, destroy by any method that will prevent disclosure of contents or reconstruction of the document.

Card 1 of 26

Table I. Lubrication Points for Modular Causeway Ferry (MCF).

Lube Point	Point Item Description	Interval	Type of Lube Lube Mil. Standard	Capacity	Temperature Range	Man Hours
1	Fuel System	As required	Diesel Fuel Marine Grade No. 2	400 gallons (1520 liters) Fill to 95%.	-25° to + 150° F	1.0
2	Diesel Engine Crankcase Oil NOTE: Engine oil must be sampled at 90 days or 100 hours, whichever comes first as prescribed by TB43-0210 or DA PAM 738-750.	150 hours or in accord. with AOAP.	SAE 40 Oil API class CD-II, Mil-L-2104D Sulfated Ash: less than1.0%	32 quarts required when filter changed (30.4 liters)	-25° to + 150° F	1.0
3	Marine Transmission Gearcase NOTE: Transmission oil must be sampled at 90 days or 100 hours, whichever comes first as prescribed by TB43-0210 or DA PAM 738-750.	300 hours or in accord. with AOAP.	SAE 40 Oil API class CD-II, MIL-L-2104D Sulfated Ash: less than 1.0% or MIL-L-2104B SAE-API service class CD certified to pass TO-2 or C-3 test specification.	2.8 gallons (10.5 liters)	25° to + 150° F	2.0
4	Transfer Case NOTE: Oil must be sampled at90 days or 100 hours, whichever comes first as prescribed by TB43-0210 or DA PAM 738-750.	First 24 Hours and Monthly thereafter or IAW AOAP	Above 0° F, - SAE Grade 50, MIL-L-2104F or MIL-L-46152 Below 0° F, - SAE Grade 30, MIL-L-2104F or MIL-L-46152	11 pints (5.17 liters)	0° to + 150° F -25° to + 0° F	1.5 Hour

Card 2 of 26

Table I. Lubrication Points for Modular Causeway Ferry (MCF) (Cont).

Lube Point	Point Item Description	Interval	Type of Lube Lube Mil. Standard	Capacity	Temperature Range	Man Hours
5	Interlock Connector Pin Spring	Annually and On Condition (before and after operation)	Lubriplate Grease, 1200-2, MIL-G-18458	As required	-25° to + 150° F	0.3 each assy.
6	Engine Cooling System	1,000 hours or annually	50/50 Water/Ethylene Glycol mix (ASTM D4985)	54 quarts each engine (51.3 liters)	-25° to + 150° F	1.5
7	Drive Shafts (Cross & Bearings (Grease Zerks))	First 200 hrs, Quarterly thereafter	Grade #2 (tube) Lithium soap base or equivalent E.P. grease, N.L.G.I. grade 2	Add lubricant until it appears at all journal cross bearings.	-10° to + 250° F	0.5
8	Intake Plenum Hinges	Quarterly	Grease, MIL-G-81322	As required		0.5
9	Exhaust Plenum Pivots	Quarterly	Grease, MIL-G-81322	As required		0.1
10	Operator's Cab Door Hinges	Quarterly	Grease, MIL-G-81322	As required		0.1
11	Anchorboard Pivot Points	Quarterly	Grease, MIL-G-81322	As required		0.1
12	Pump-Jet-Planetary Gearbox, Primary	First 100 hrs and every 2500 hrs thereafter	MIL-L-2105, Grade 80/90, ISO VG 150, AGMA4 EP	1.8 liters (.48 gallons)	-25° to + 150° F	2.0
13	Pump-Jet-Planetary Gearbox, Auxiliary	First 100 hrs and every 2500 hrs thereafter	MIL-L-2105, Grade 80/90, ISO VG 150, AGMA 4 EP	1.8 liters (.48 gallons)	-25° to + 150° F	2.0

Card 3 of 26

Table I. Lubrication Points for Modular Causeway Ferry (MCF) (Cont.)

Lube Point	Point Item Description	Interval	Type of Lube Lube Mil. Standard	Capacity	Temperature Range	Man Hours
14	Hydraulic System NOTE: Hydraulic fluids must be sampled at 180 days as prescribed by TB43-0210 or DA PAM 738-750.	First 500 hours and 2000 hours or annually, which ever comes first	Mobil DTE 25, ISO Viscosity Grade 46	35 gallons (1 33 liters) 26 gallons (98.8 liters), reservoir only	-10° to +150° F	3.5
15	Pump-Jet Gear Case	First 250 hrs and 2500 hours or semi-annually or IAVV AOAP.	ISO Viscosity Grade 68, AGMA Grade 2 EP	20 gallons (76 liters)	-25° to +150° F	4.0
16	Pump-Jet Hydro Hand Pump	First 500 hours and 2000 hours or annually, which ever comes first	Mobil DTE 25, ISO Viscosity Grade 46		-10° to +150° F	0.5
17	Horizontal and Vertical Connectors	Annually and On Condition (before and after operation)	Lubriplate Grease, 1200-2, MIL-G-18458	As required	-25° to + 150° F	0.1 each conn-ector
18	Emergency Steering Unit (Flange Grease Zerks)	Quarterly	Grade #2 (tube) Lithium soap base or equivalent E.P. grease N.L.G.I. grade 2	As required	-10° to + 150° F	0.1

Card 4 of 26

Lube Point	Point Item Description	Interval	Type of Lube Lube Mil. Standard	Capacity	Temperature Range	Man Hours
19	Bridle Sling-all components	2500 Hours or semi-annually, whichever occurs first	Rust preventative compound or wire rope grease, MIL-G-18458B (SH) and Amendment 4	As required	-20° to +150° F	0.3

Card 5 of 26

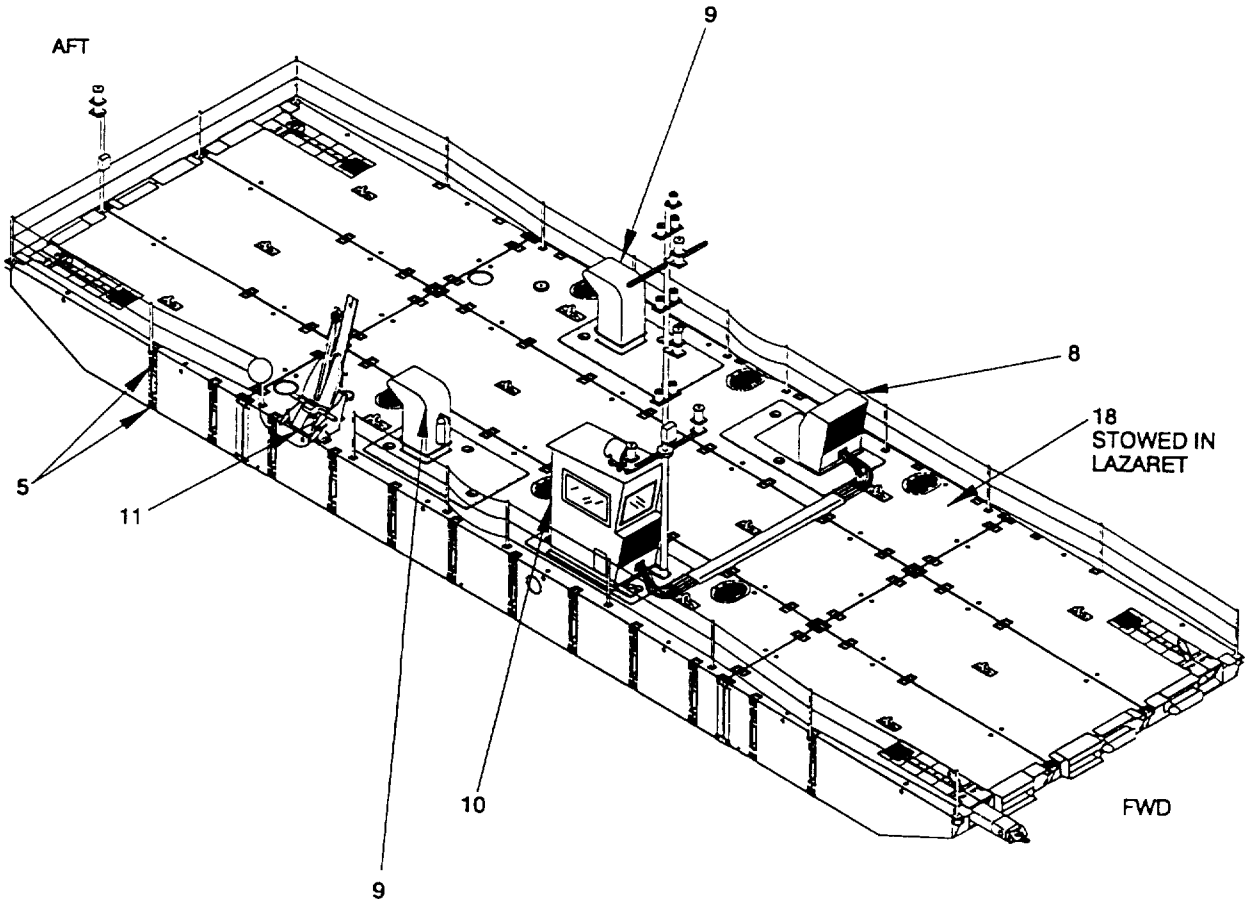

ISO CONNECTORS (17)
BRIDLE SLING (19)
NOT SHOWN

Location of MCF Lubrication Points (LP) (Sheet 1 of 2)

Card 6 of 26

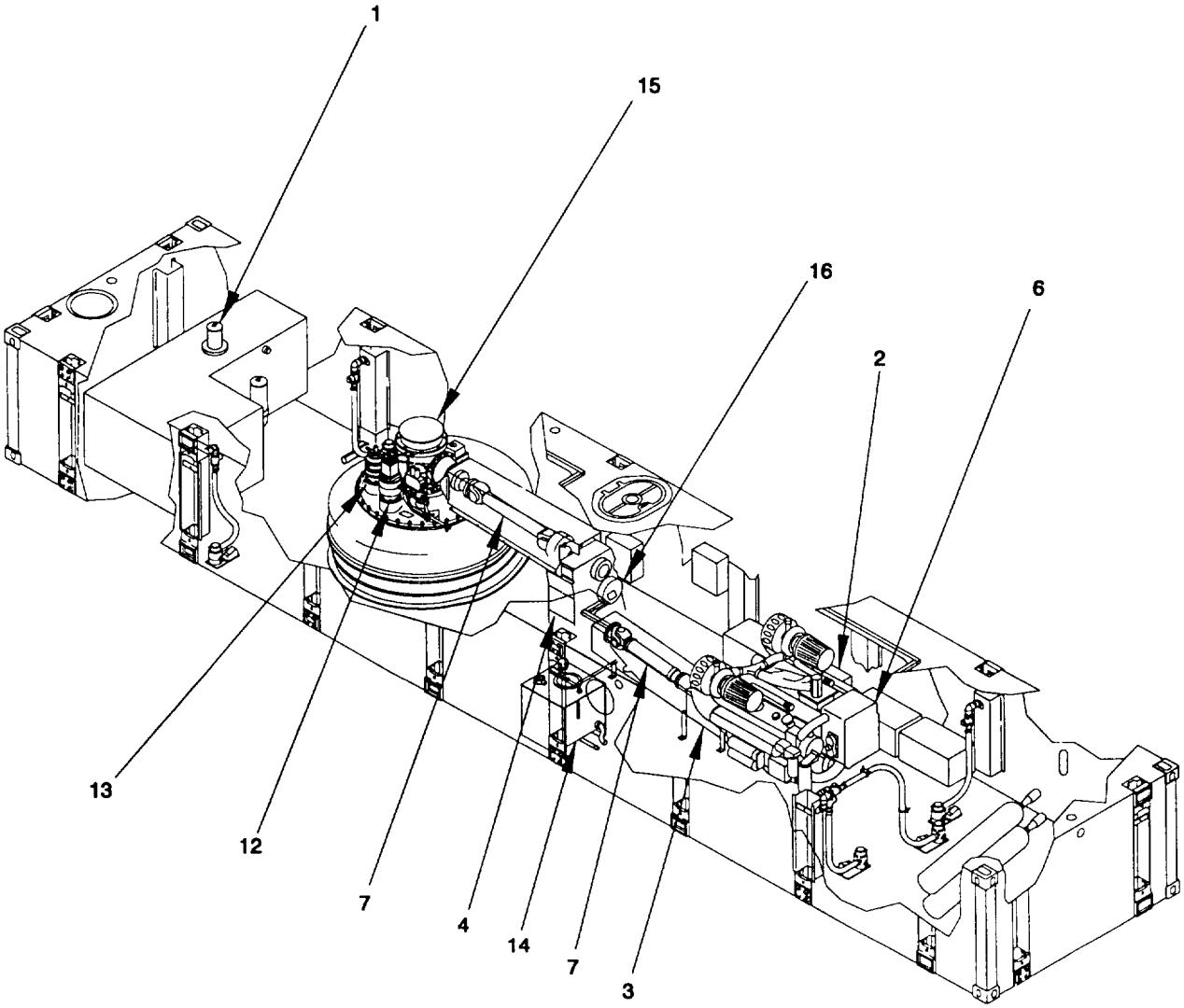

Location of MCF Lubrication Points (LP) (Sheet 2 of 2)

Card 7 of 26

Table II. Lubrication Points for the Fuel System.

Lube Point	Temperature Range	Lubricant Mil. Symbol (NATO Code) Specification	Capacity	Interval	Man-Hour
1	-25° to + 150° F	Diesel Fuel Marine Grade No. 2	400 gallons (1520 liters). Fill to 95%.	As required	1.0

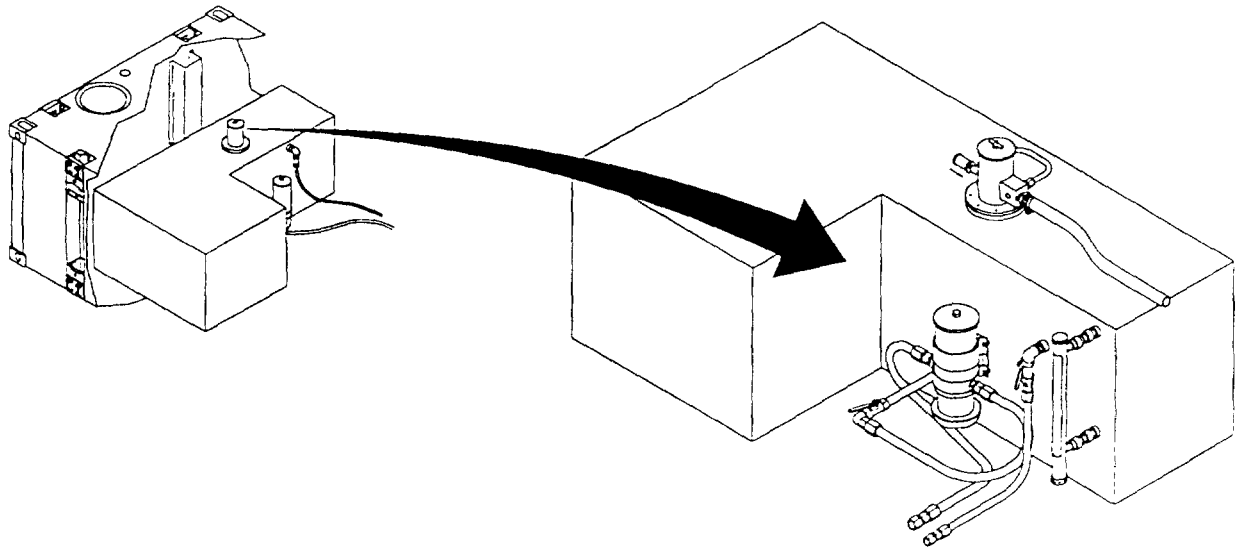

Fuel System.

Card 8 of 26

Table III. Lubricant Table for Diesel Engine Crankcase.

Lube Point	Temperature Range	Lubricant Mil. Symbol (NATO Code) Specification	Capacity	Interval	Man-Hour
2	-25° to + 150° F NOTE: Engine oil/ must be sampled at 90 days or 100 hours, whichever comes first as prescribed by TB43-0210 or DA PAM 738-750.	SAE 40 Oil API class CD-II, Mil-L-2104D Sulfated Ash: less than 1.0%	32 quarts required when filter changed (30.4 liters)	150 Hours or in accordance with AOAP	2.0

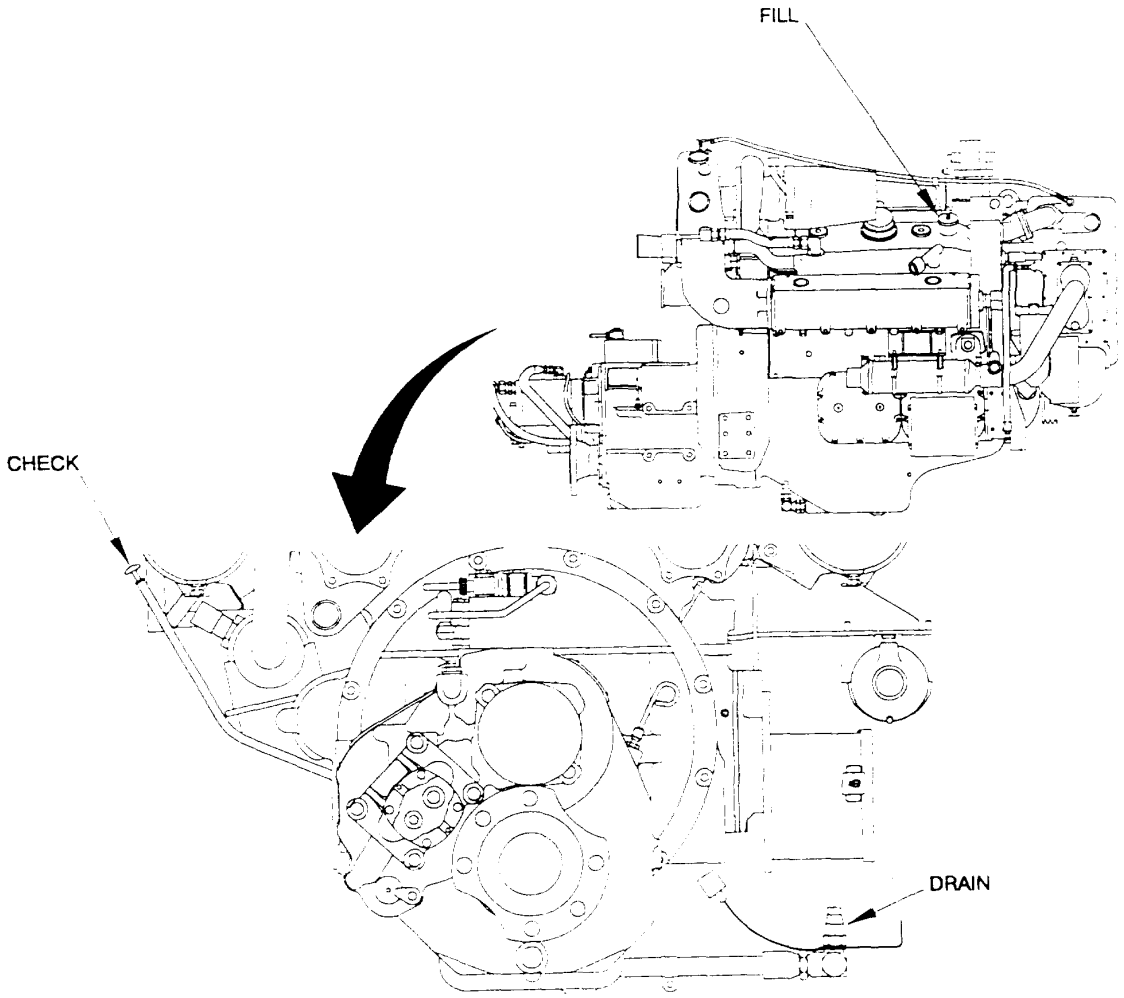

Diesel Engine Crankcase

Card 9 of 26

Table IV. Lubricant Table for Marine Transmission.

Lube Point	Temperature Range	Lubricant Mil. Symbol (NATO Code) Specification	Capacity	Interval	Man-Hour
3	-25° to + 150° F NOTE: Transmission must be sampled at 90 days or 100 hours, whichever comes first as prescribed by TB43-0210 or DA PAM 738-750.	SAE 40 Oil API class CD-II, Mil-L-2104D Sulfated Ash: less than 1.0% or MIL-L-21 04B SAE-API service class CD certified to pass TO-2 or C-3 test specification.	2.8 gallons (10.5 liters)	300 Hours or in accordance with AOAP	2.0 Hour

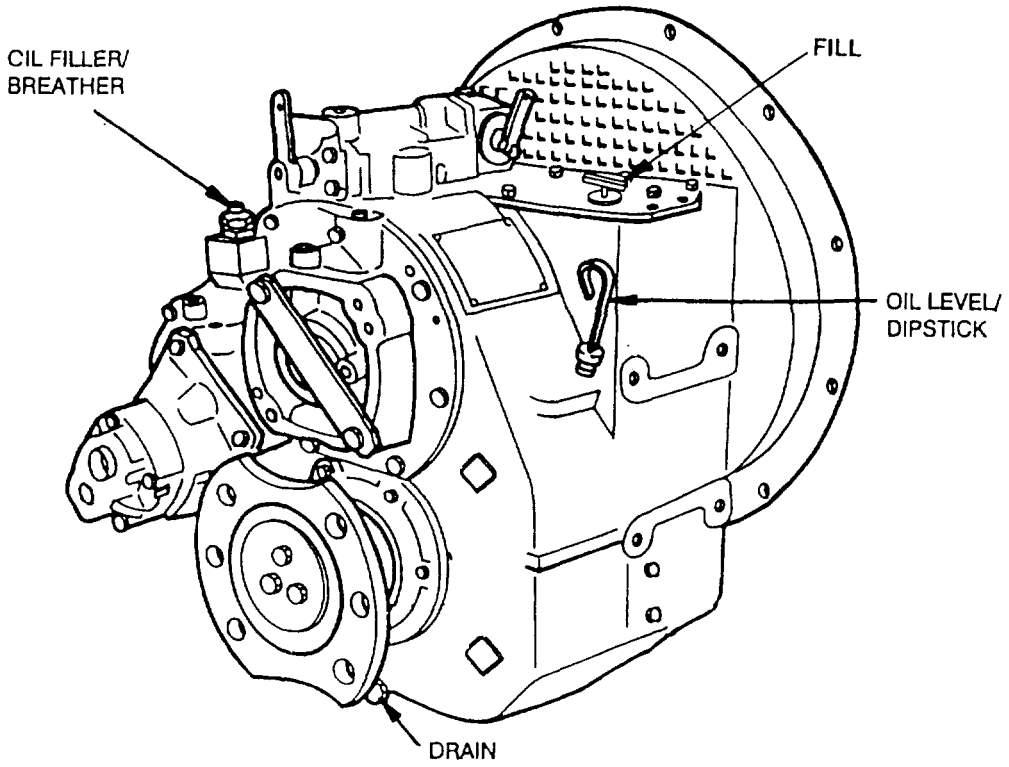

Marine Transmission.

Card 10 of 26

Table V. Lubricant Table for Transfer Case.

Lube Point	Temperature Range	Lubricant Mil. Symbol (NATO Code) Specification	Capacity	Interval	Man-Hour
4	-0° to + 150° F -25° to + 0° F NOTE: Transfer Case oil must be sampled at 90 days or 100 hours, whichever comes first as prescribed by TB43-0210 or DA PAM 738-750.	Above 0° F. - SAE Grade 50, MIL-L-2104F or MIL-L-46152 Below 0° F. - SAE Grade 30, MIL-L-2104F or MIL-L-46152	11 pints (5.17 liters)	First 24 Hours and Monthly thereafter or IAW AOAP	1.5 Hour

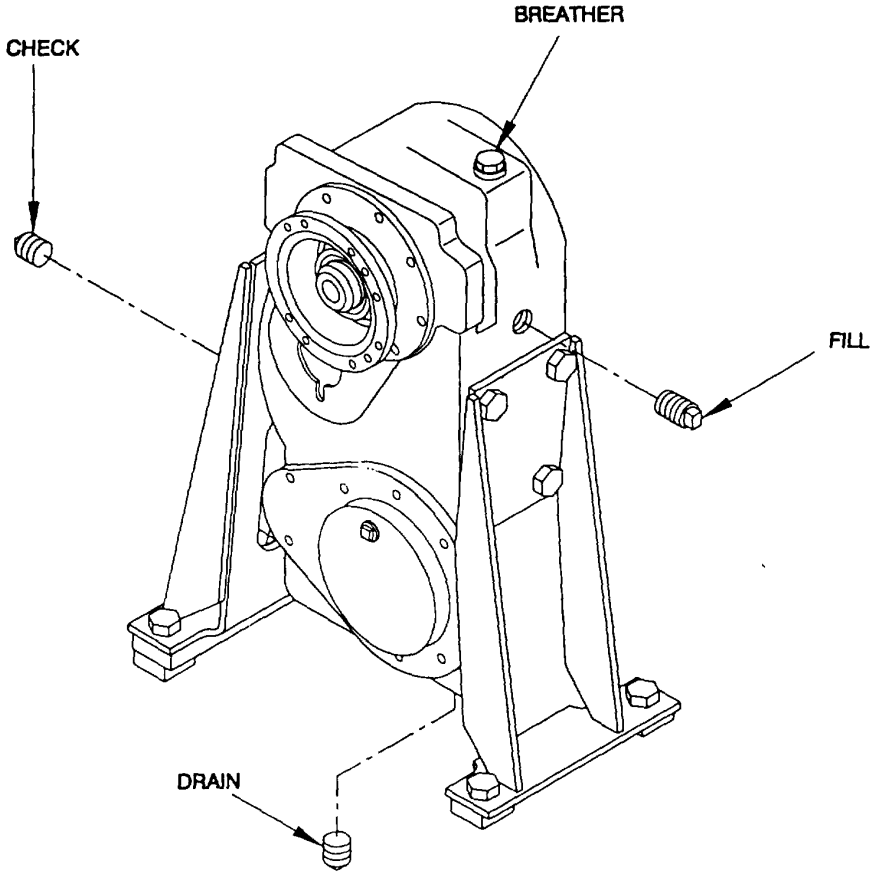

Transfer Case

Card 11 of 26

Table VI. Lubricant Table for the Interlock Connector Pin Spring.

Lube Point	Temperature Range	Lubricant Mil. Symbol (NATO Code) Specification	Capacity	Interval	Man-Hour
5	-25° to + 150° F	Lubriplate Grease, 1200-2, MIL-G-1 8458	As required	Annually and On Condition (before and after operation)	0.3 Hour each assembly

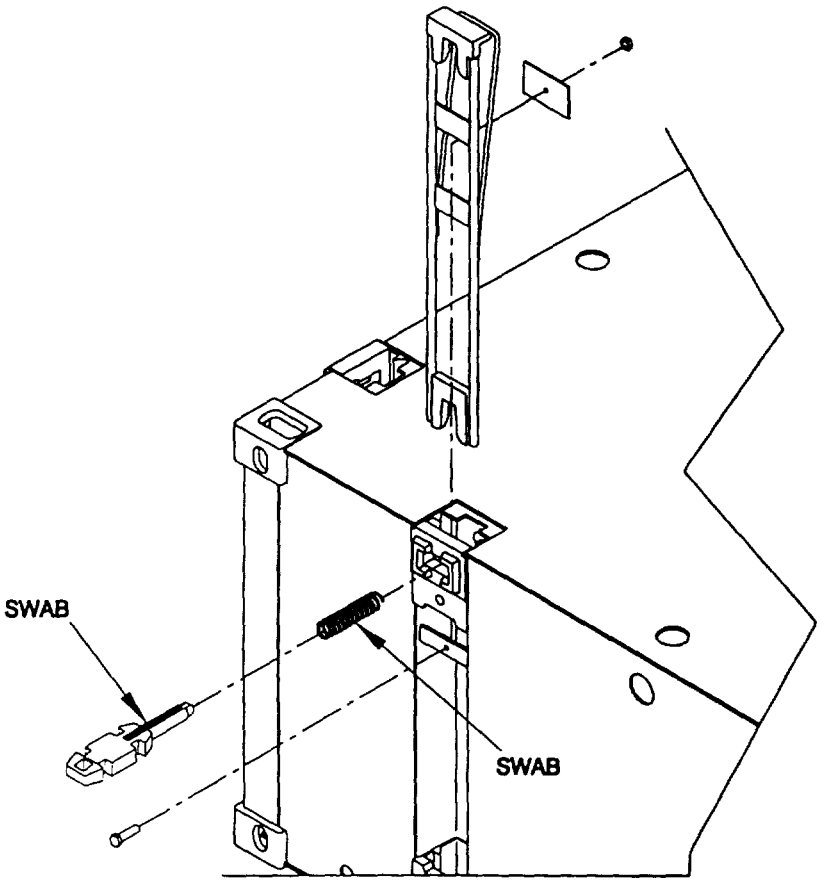

Interlock Connector Spring Pin

Card 12 of 226

Table VII. Lubricant Table for Engine Cooling System.

Lube Point	Temperature Range	Lubricant Mil. Symbol (NATO Code) Specification	Capacity	Interval	Man-Hour
6	-25° to + 150° F	50/50 Water/Ethylene Glycol mix (ASTM D4985)	54 Quarts (each engine) (51.3 liters)	1,000 hours or annually	1.5 Hour

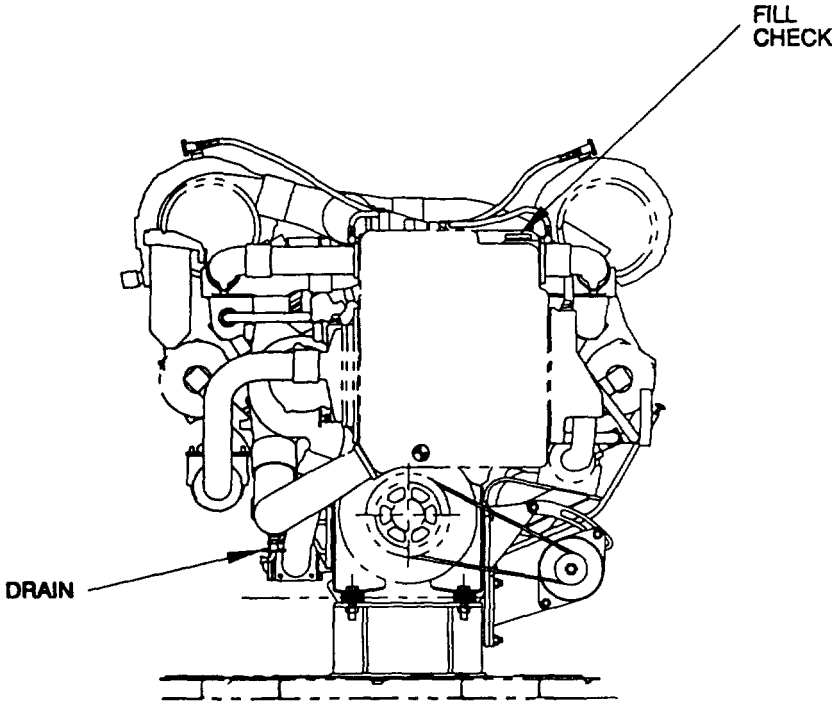

Engine Cooling System.

Card 13 of 26

Table VIII. Lubricant Table for Drive Shafts.

Lube Point	Temperature Range	Lubricant Mil. Symbol (NATO Code) Specification	Capacity	Interval	Man-Hour
7	-10° to + 250° F	Grade #2 (tube), lithium soap base or equivalent E.P. grease, N.L.G.I. grade #2	Add lubricant until it appears at all journal cross bearings	First 200 hours and Quarterly thereafter	0.5 Hour

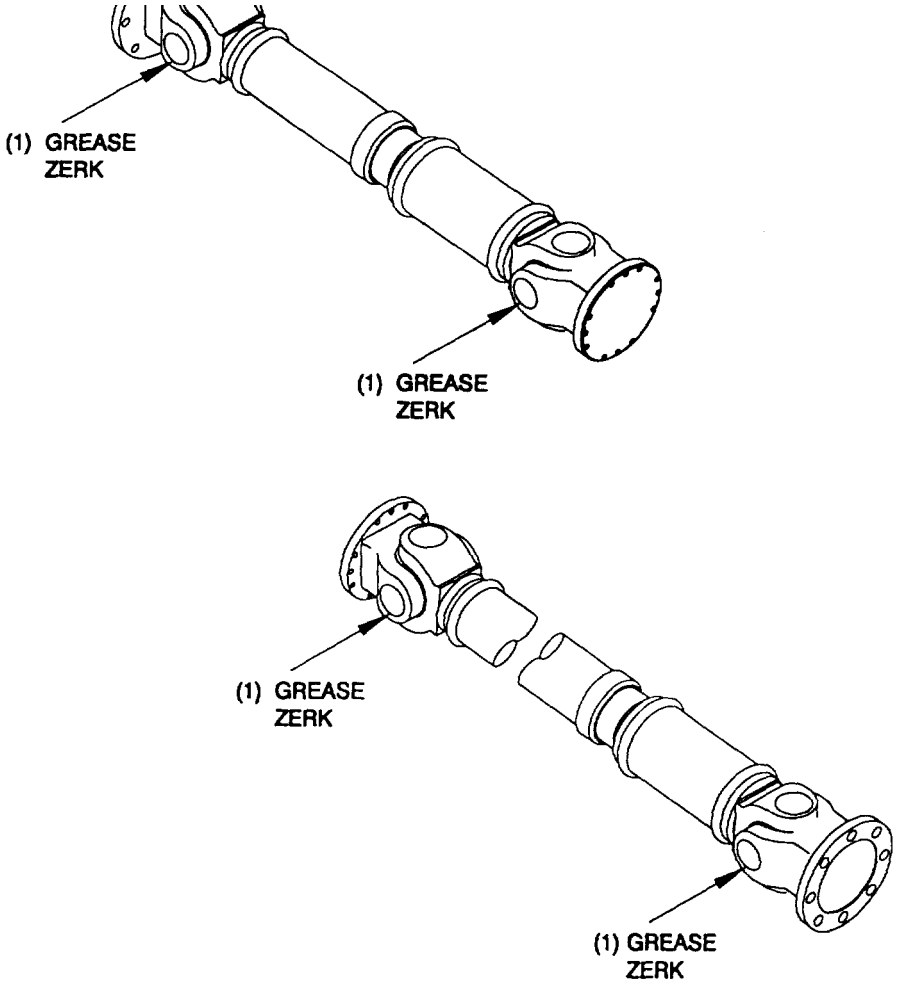

Drive Shafts (Typical).

Drive Shafts (Typical)

Card 14 of 26

Table IX. Lubrication Points for Intake Plenum Hinges.

Lube Point	Temperature Range	Lubricant Mil. Symbol (NATO Code) Specification	Capacity	Interval	Man-Hour
8	-25° to + 150° F	Grease. MIL-G-81322	As required	Quarterly	0.5

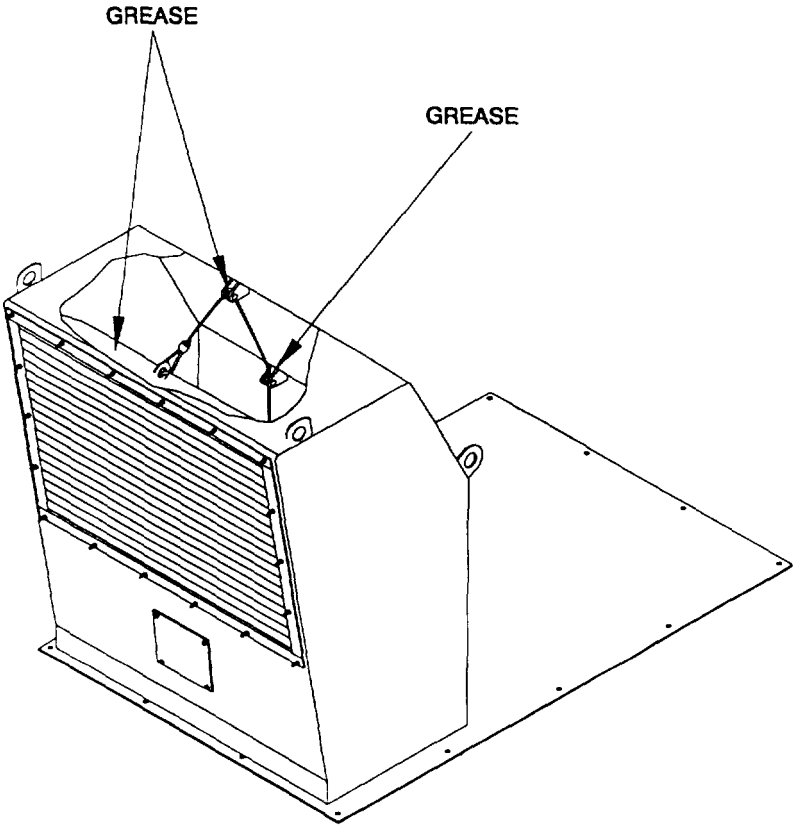

Intake Plenum Hinges.

Card 15 of 26

Table X. Lubrication Points for Exhaust Plenum Pivots.

Lube Point	Temperature Range	Lubricant Mil. Symbol (NATO Code) Specification	Capacity	Interval	Man-Hour
9		Grease, MIL-G-81322	As required	Quarterly	0.1

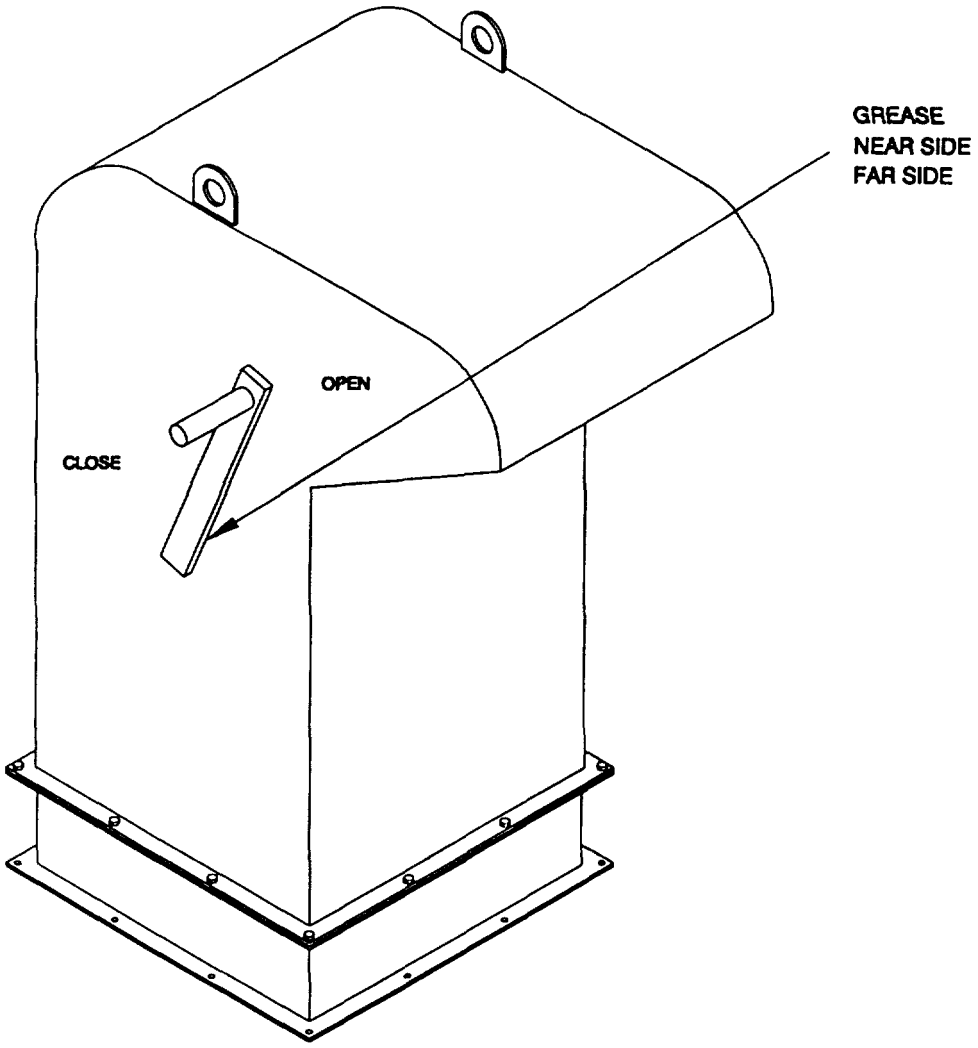

Exhaust Plenum Pivots.

Card 16 of 26

Table XI. Lubrication Points for Operator's Cab Door Hinges.

Lube Point	Temperature Range	Lubricant Mil. Symbol (NATO Code) Specification	Capacity	Interval	Man-Hour
10		Grease, MIL-G-81322	As required	Quarterly	0.1

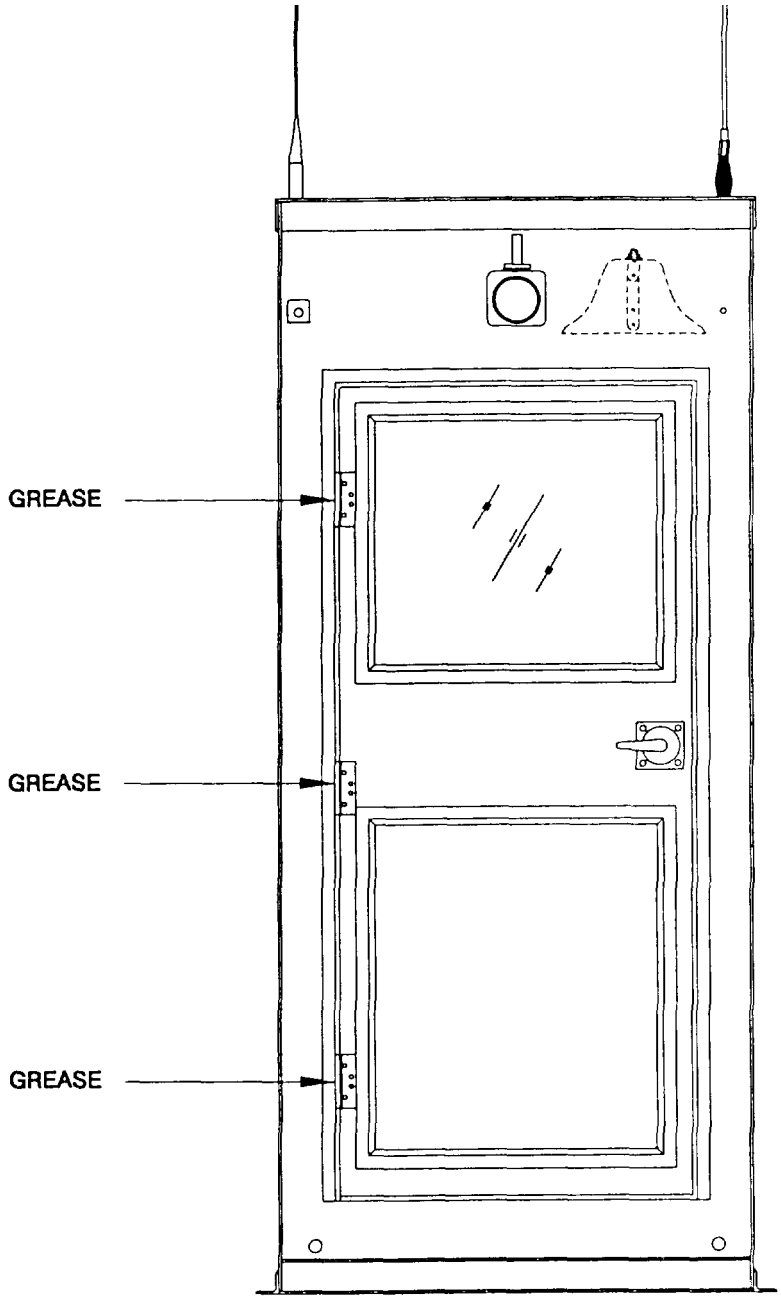

Operator Cab Door Hinges.

Operator Cab Door Hinges.

Card 17 of 26

Table XII. Lubrication Points for Anchorboard Pivot Pin Points.

Lube Point	Temperature Range	Lubricant Mil. Symbol (NATO Code) Specification	Capacity	Interval	Man-Hour
11		Grease, MIL-G-81322	As required	Quarterly	0.1

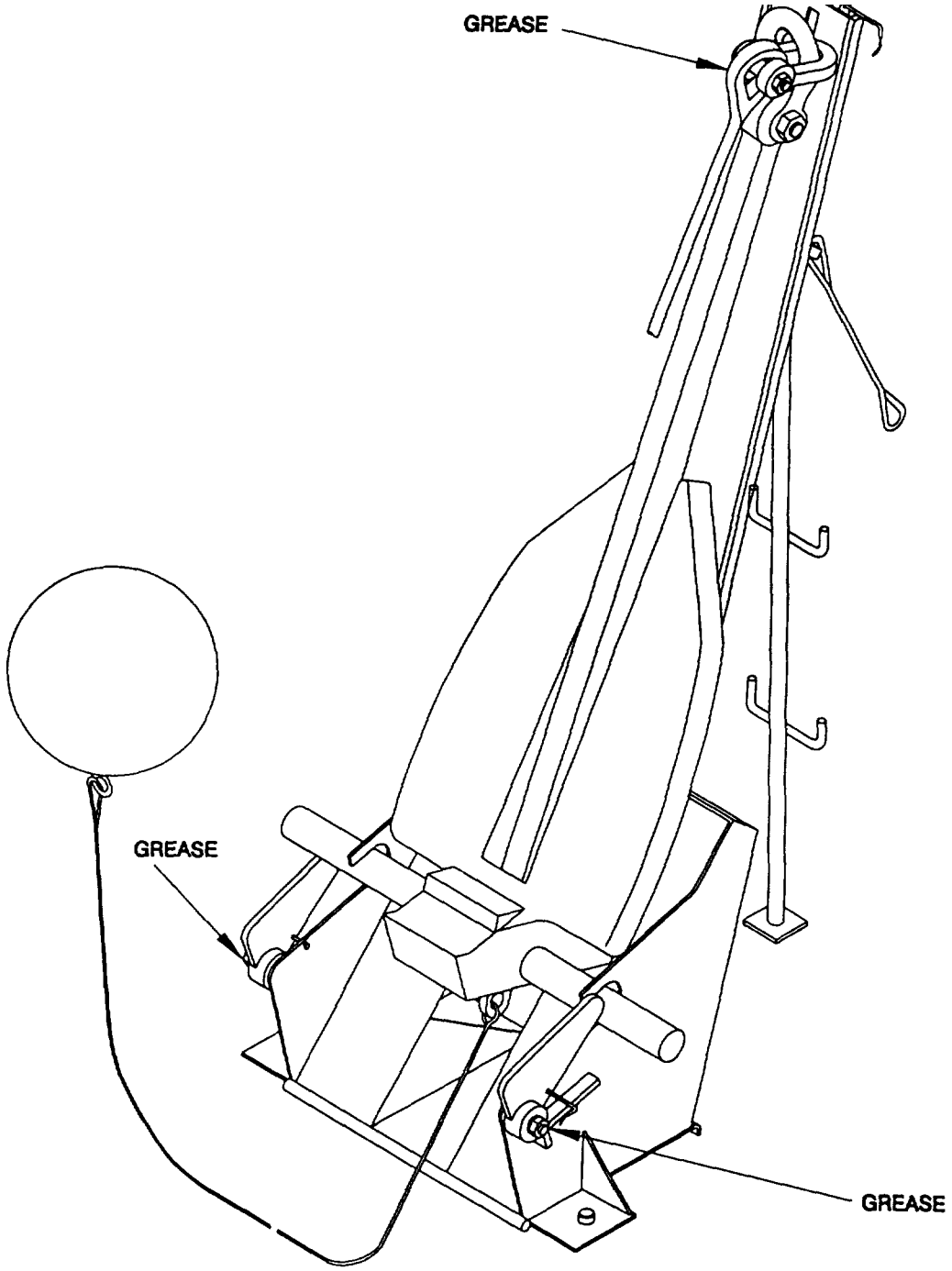

Anchorboard Pivot Pin Points.

Anchorboard Pivot Pin Points.

Card 18 of 26

Table XIII. Lubricant Table for Pump-Jet Planetary Gearbox - Primary.

Lube Point	Temperature Range	Lubricant Mil. Symbol (NATO Code) Specification	Capacity	Interval	Man-Hour
12	-25° to + 150° F	MIL-L-2105, Grade 80/90, ISO VG 150, AGMA 4 EP	1.8 liters (.48 gallons)	First 100 hours and every 2500 hours thereafter	2.0

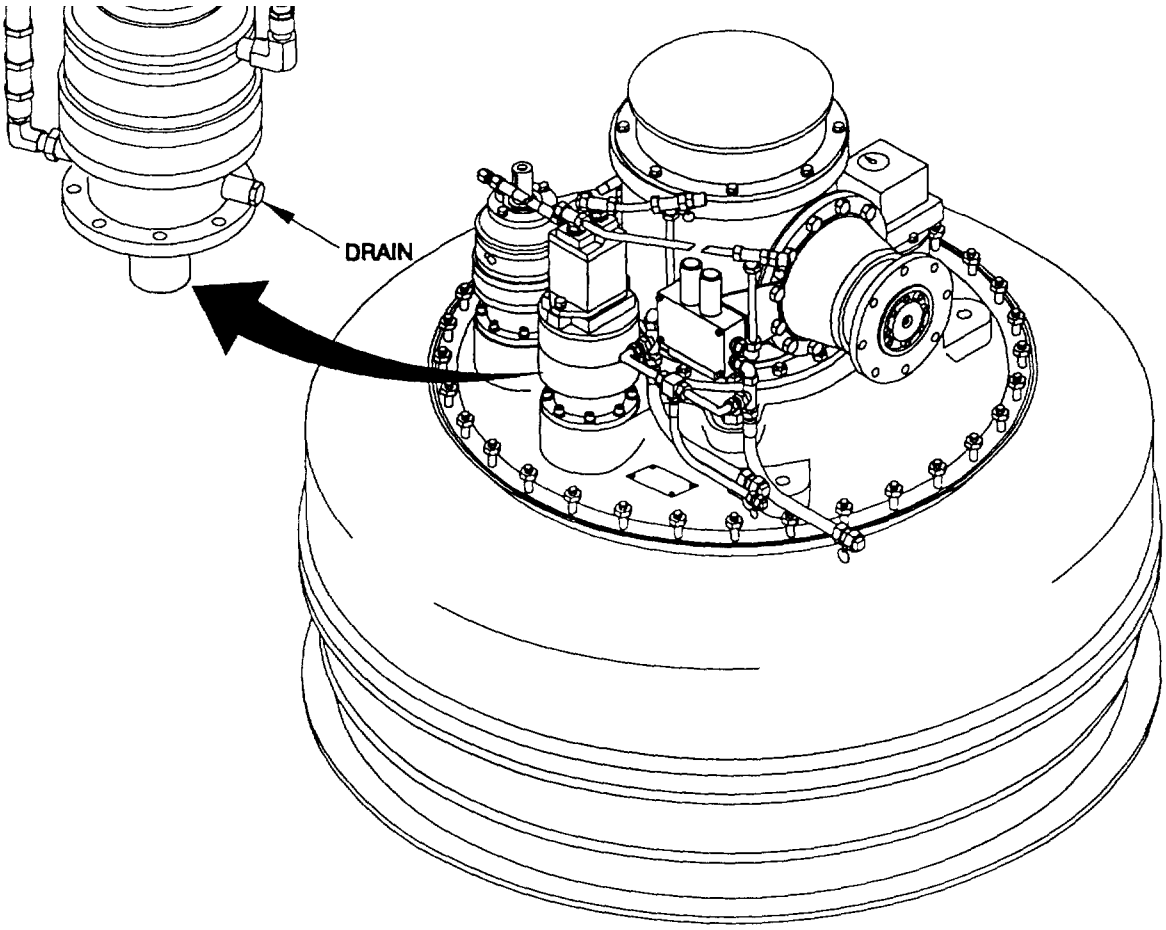

Pump-Jet Planetary Gearbox - Auxilliary.

Pump-Jet Planetary Gearbox-Primary.

Card 19 of 26

Table XIV. Lubricant Table for Pump-Jet Planetary Gearbox - Auxiliary.

Lube Point	Temperature Range	Lubricant Mil. Symbol (NATO Code) Specification	Capacity	Interval	Man-Hour
13	-25° to + 150° F	MIL-L-2105, Grade 80/90, ISO VG 150, AGMA 4 EP	1.8 liters (.48 gallons)	First 100 hours and every 2500 hours thereafter	2.0

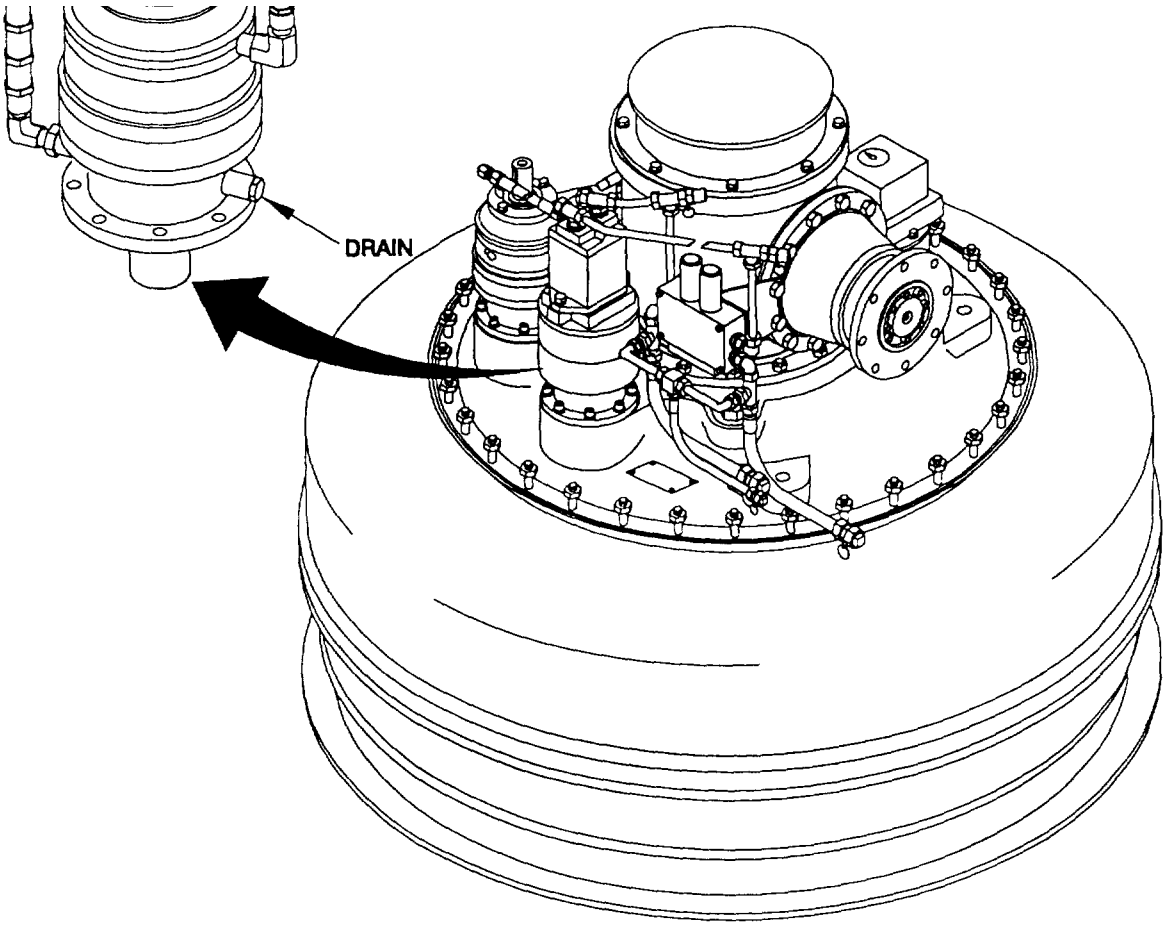

Pump-Jet Planetary Gearbox - Auxilliary.

Pump-Jet Planetary Gearbox - Auxiliary.

Card 20 of 26

Table XV. Lubrication Points for Hydraulic System.

Lube Point	Temperature Range	Lubricant Mil. Symbol (NATO Code) Specification	Capacity	Interval	Man-Hour
14	-10° to + 150° F	Mobil DTE 25, ISO Viscosity Grade 46	35 gallons total (133 liters) 26 gallons (98.8 liters), Reservoir Only	First 500 Hours and 2,000 hours or Annually, whichever comes first	3.5
NOTE: Hydraulic Fluids must be sampled at 180 days as prescribed by TB43-021 0 or DA PAM 738-750.					

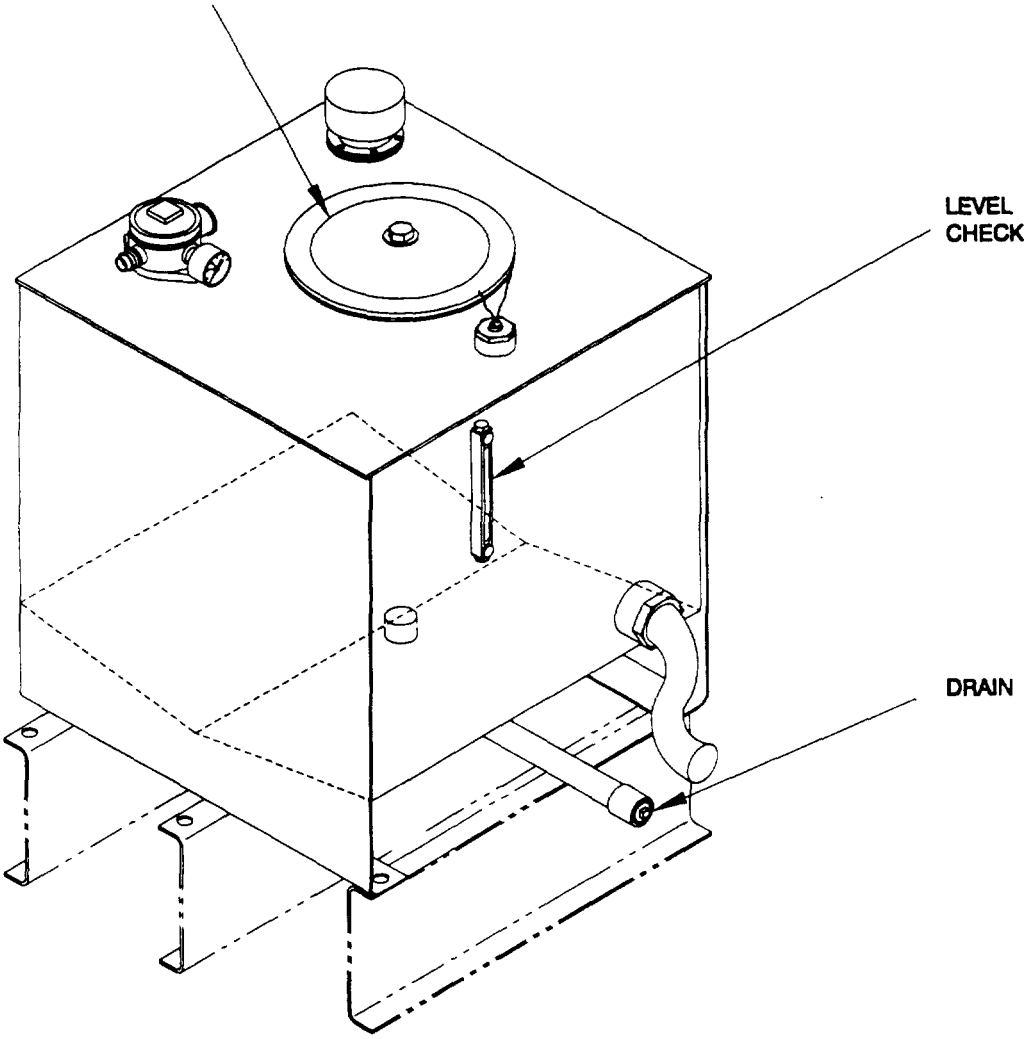

Hydraulic System.

Hydraulic System.

Card 21 of 26

Table XVI. Lubricant Table for Pump-Jet Gear Case.

Lube Point	Temperature Range	Lubricant Mil. Symbol (NATO Code) Specification	Capacity	Interval	Man-Hour
2	-25° to + 150° F	ISO Viscosity Grade 68, AGMA Grade 2 EP	20 gallons (76 liters)	First 250 hours, and 2500 hours or semi-annually or IAW AOAP.	4.0

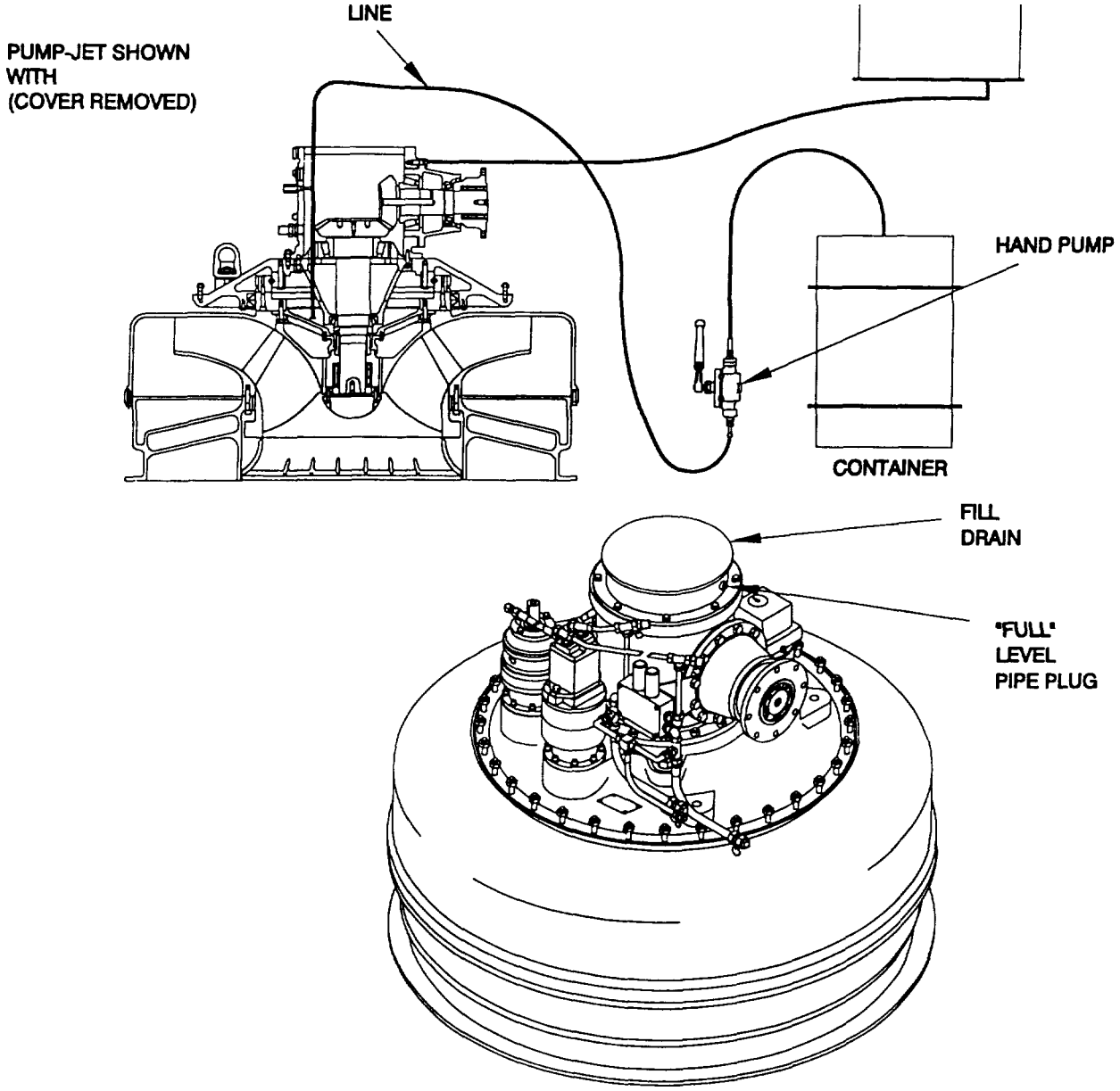

Pump-Jet Gear Case.

Pump-Jet Gear Case.

Card 22 of 26

Table XVII. Lubricant Table for Pump-Jet Hydro Hand-Pump.

Lube Point	Temperature Range	Lubricant Mil. Symbol (NATO Code) Specification	Capacity	Interval	Man-Hour
16	-10° to + 150° F	Mobil DTE 25, viscosity Grade 46	As required	First 500 hours and 2000 hours or annually, whichever comes first	0.5

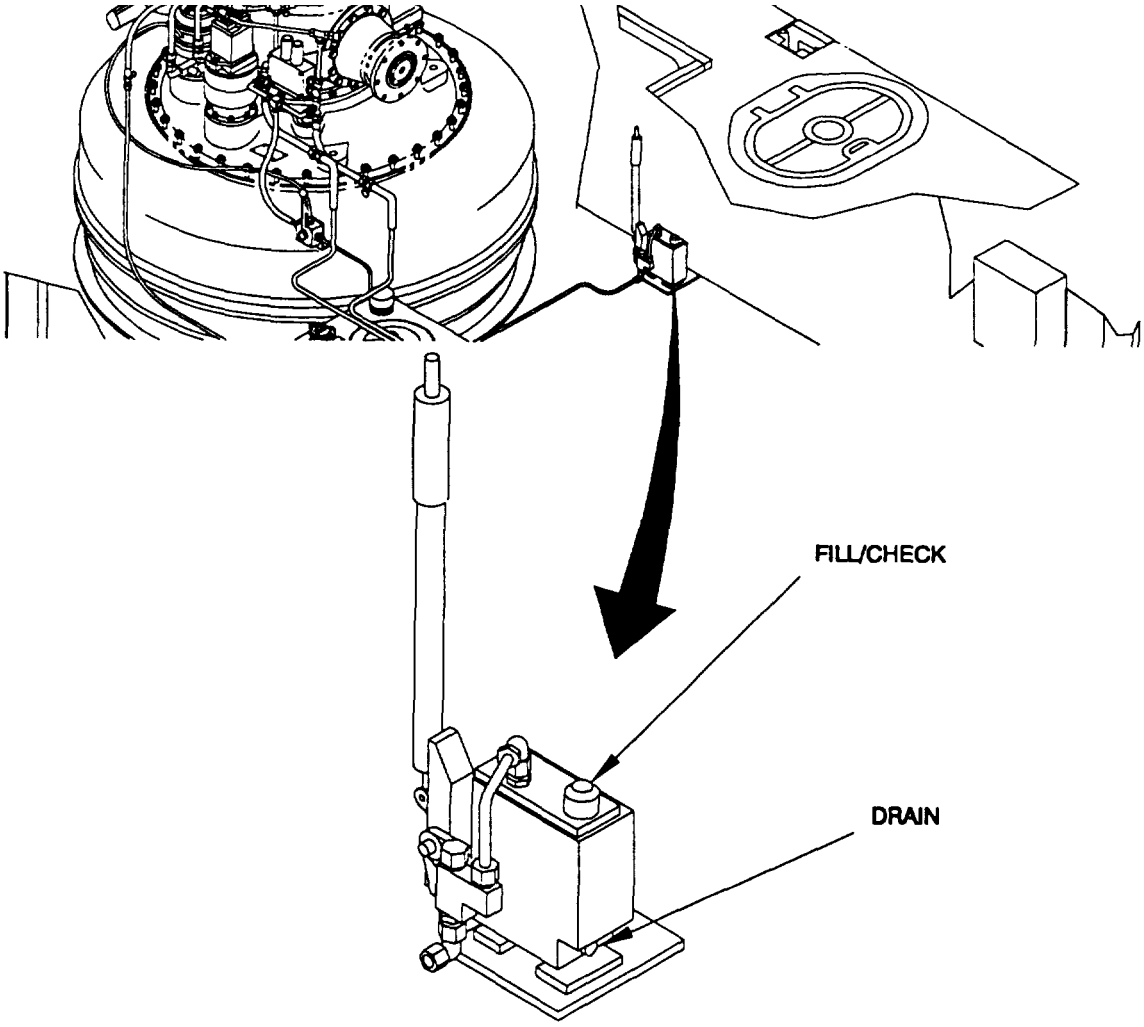

Pump-Jet Hydro Hand-Pump.

Pump-Jet Hydro Hand-Pump.

Card 23 of 26

Table XVIII. Lubricant Table for Horizontal and Vertical Connectors.

Lube Point	Temperature Range	Lubricant Mil. Symbol (NATO Code) Specification	Capacity	Interval	Man-Hour
17	-25° to + 150° F	Lubriplate Grease, 1200-2, MIL-G-1 8458	As required	As required	.1 each connector

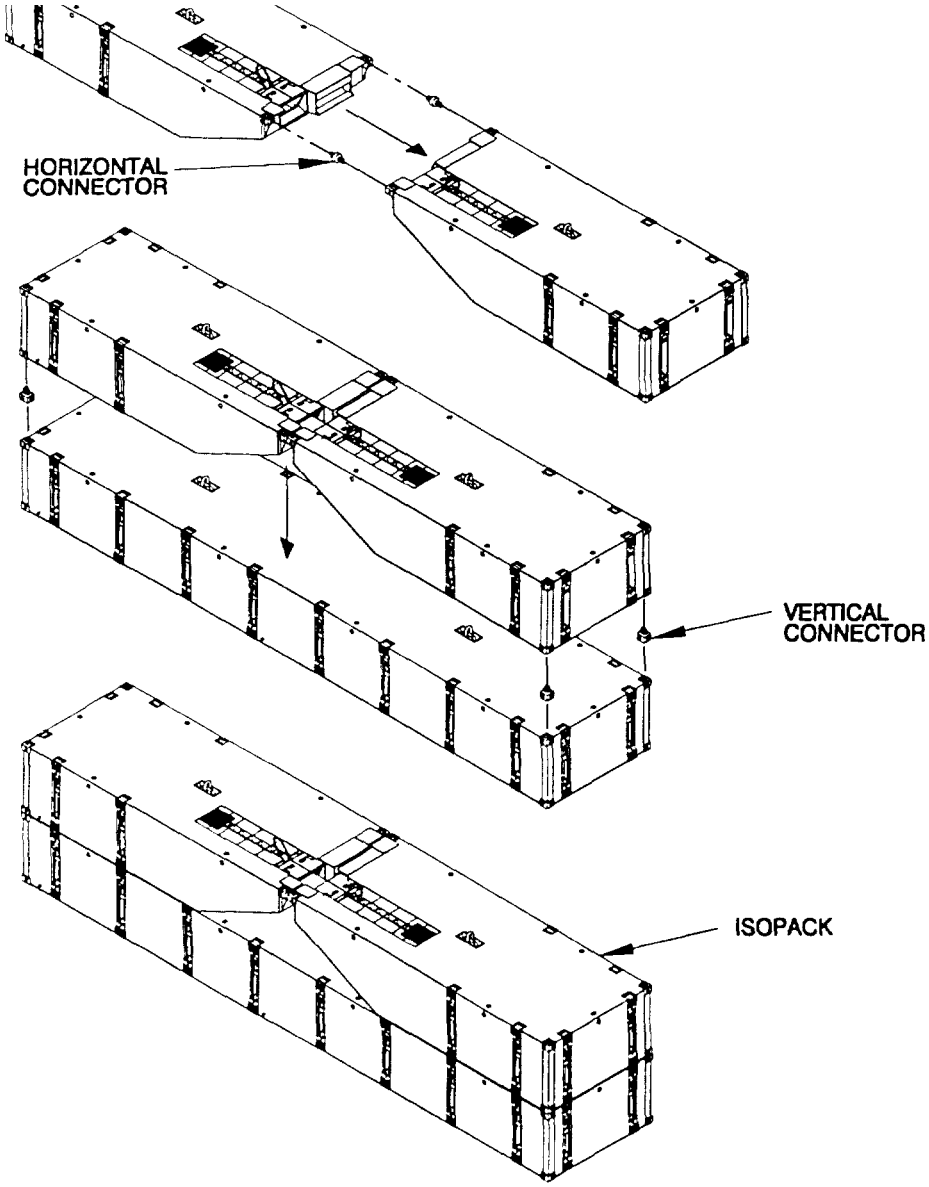

Horizontal and Vertical Connectors - Modules.

Horizontal and Vertical Connectors - Modules

Card 24 of 26

Table XVIX. Lubricant Table for Emergency Steering System.

Lube Point	Temperature Range	Lubricant Mil. Symbol (NATO Code) Specification	Capacity	Interval	Man-Hour
18	-10° to + 250° F	Grade #2 (tube) Lithium soap base or equivalent E.P. Grease, N.L.G.I. grade 2	As required	Quarterly	1 each connector

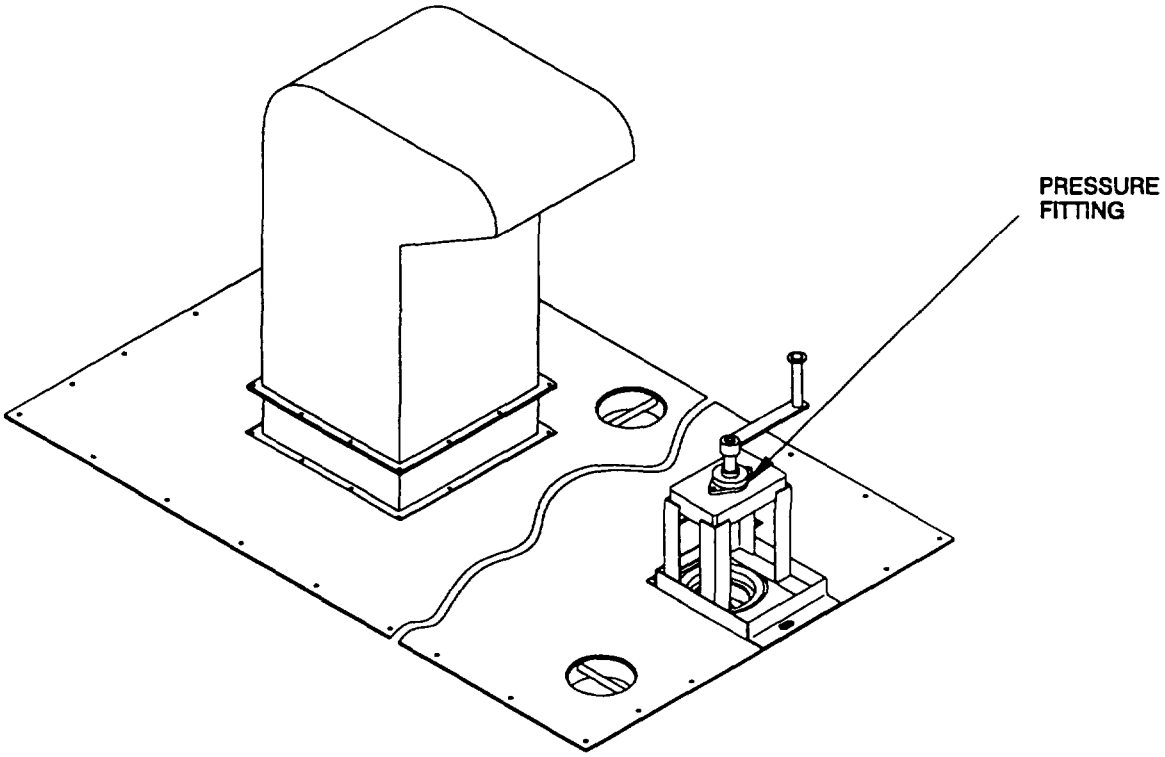

Emergency Steering System - Flange Grease Zerks.

Card 25 of 26

Table XX. Lubricant Table for Bridle Sling.

Lube Point	Temperature Range	Lubricant Mil. Symbol (NATO Code) Specification	Capacity	Interval	Man-Hour
2	-20° to + 150° F	Rust preventative compound or wire rope grease, MIL-G-18458B(SH) and Amendment 4	As required	2500 hours or semi-annually, whichever comes first	0.3

Copy of this lubrication order will remain with the equipment at all times; instructions contained herein are mandatory.

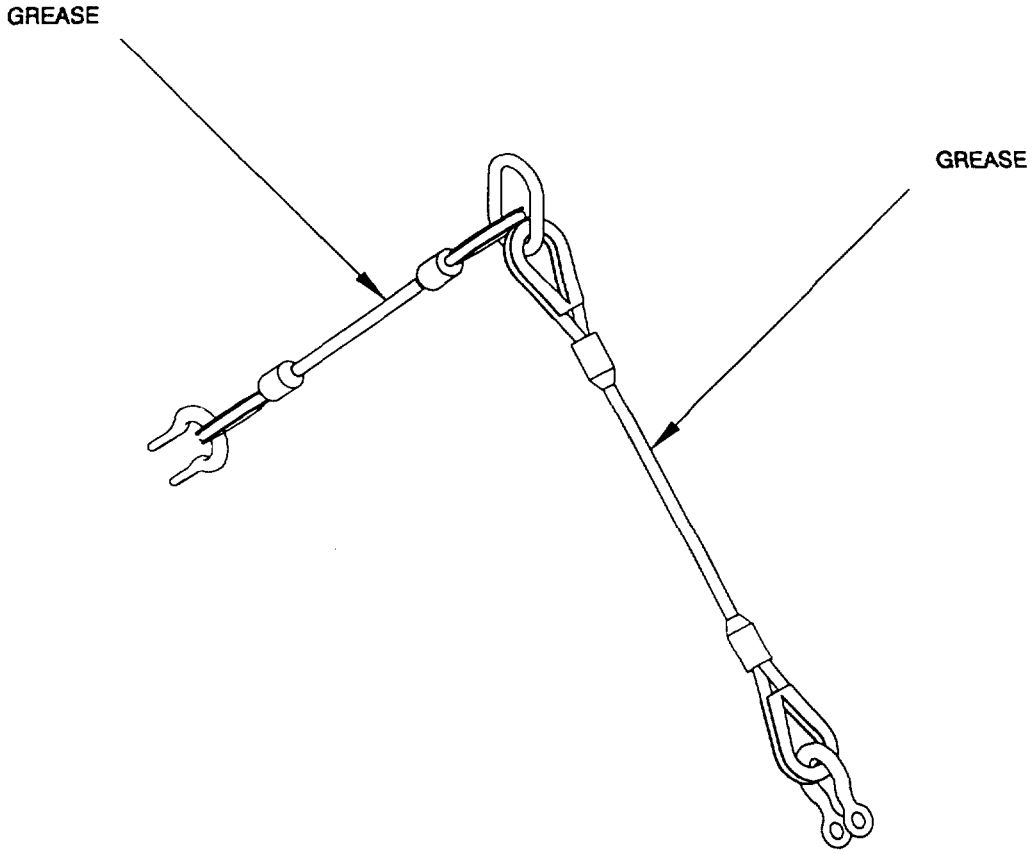

Bridle Sling.

Card 26 of 26

INDEX

Title	Page, Figure Table
A	
Accessory, Controls and Indicators, Operators Cab/Above Deck	2-17, F2-6, T2-5
Anchorboard, Powered Section, Equipment Description	1-25, Fl-15
Anchorboard Assembly, Emergency Controls and Indicators	2-35, F2-17, T2-14
Adjustments, Checks and Self-Test, Initial	2-171
Assembly Instructions, General	2-144
Assembly and Preparation for Use, Non-Powered Module/Non-Powered Section	2-119
Assembly Summation	2-137, F2-41, F2-42, F2-43
Connector Assembly	2-119, F2-28
Deck Fittings, Fenders, and Rhino Horn Installation	2-128, F2-36
Female Connector Assembly	2-121, F2-30
Flexor Connector Installation	2-135, F2-40
Lifting the MCF Section	2-140, F2-44
Male Connector Assembly	2-121, F2-29
MCF Disengagement and Connector Stowage	2-141, F2-45
MCF -NL Interoperability	2-143, F2-46
MCF Section and String Assembly	2-124, F2-32 thru F2-35
Module System Assembly	2-131, F2-37 thru F2-39
P-3 Adapter Assembly Connection Assembly	2-122, F2-31
B	
Beach/Sea End Module, Equipment Description	1-27, F1-19
Beach/Sea End Section, Combination, Equipment Description	1-27, F1-17 and F1-18
Beach/Sea End Module	1-27, F1-19
Center Module	1-27
Deck Fittings	1-31, F1-21
End Rake Module	1-27
P-3 Adaptor Assembly	1-27, F1-20
Below Deck Controls and Indicators	2-20, F2-7
Electrical Controls	2-20
Bilge Pump Control Assembly (A5)	2-26, F2-1 1, T2-9
Engine Mounted Controls	2-22, F2-8, T2-6
Engine Junction Box Assembly (A4)	2-25, F2-10, T2-8
Propulsion Module Circuit Breaker Panel (A6)	2-23, F2-9, T2-7
Single Bilge Pump Control Assembly (A7	2-28, F2-12, T2-10
Fuel System Controls	2-29
Hydraulic Steering System Indicators	2-29
Raw Water System Controls	2-31
Bilge Flood Warning and Control System, MCF Electrical System, Principles of Operation	1-43
Bilge Pump System, Emergency Controls and Indicators	2-47, F2-21, T2-18
Bilge Pump Control Assembly (A5), Below Deck	2-26, F2-1 1, T2-9
Bilge Pump Control Assembly (A7), Single, Below Deck	2-28, F2-12, T2-10

INDEX

Title	Page, Figure Table
C	
Cab Auxiliary Systems, MCF Electrical System, Principles of Operation	1-47
Center Module, Beach/Sea End Section, Equipment Description	1-27
Center Module, Intermediate Section, Equipment Description	1-26
Center Module, Powered Section, Equipment Description	1-13, F1-4
Circuit Breaker Panel, Operator's Cab	2-13, F2-4, T2-3
Circuit Breaker Panel (A6), Propulsion Module	2-23
Communication and Electronic Equipment, Powered Section, Equipment Description	1-22
Communications, MCF Electrical System, Principles of Operation	1-43
Connector Assemblies, Powered Section, Equipment Description	1-16, F1-7, F1-8
Connector Assembly, NP, Assembly and Prep for Use	2-119, F2-28
Connector Assembly, Female, NP, Assembly and Prep for Use	2-121, F2-30
Connector Assembly, Male, NP, Assembly and Prep for Use	2-120, F2-29
Connector Assembly, P-3 Adapter, NP, Assembly and Prep for Use	2-122, F2-31
Connectors, Intermediate Section, Equipment Description	1-26
Control Panel, Lower, Operator's Cab/Above Deck (A2)	2-9, F2-3, T2-2
Control Panel, Middle, Operator's Cab/Above Deck (A1)	2-6, F2-2, T2-1
Controls and Indicators, Operators, Description and Use of	2-3, F2-1
Cooling and Exhaust, MCF, Principles of Operation	1-37, F1-23
D	
Decals and Instruction Plate Locations	2-171, F2-53, T2-24
Deck Fittings, Beach/Sea End Section, Equipment Description	1-31, F1-21
Deck Fittings, Fenders and Rhino Horn Install., NP, Assembly and Prep for Use	2-128, F2-36
Deck Fittings, General Maintenance	3-5
Decontamination Procedures, Nuclear, Biological and Chemical (NBC)	2-189
Diesel Engine, Emergency Stop Controls	245, F2-20, T2-17
Drive Train, MCF, Principles of Operation	1-35, F1-22
E	
Electrical Controls, Below Deck	2-20
Electrical Interconnect System, MCF Electrical System, Principles of Operation	1-47, F1-26, F1-27
Electrical Interconnection Cables, Module, Powered Section, Equipment Description	1-24, F1-14
Electronic Countermeasures (ECM), Jamming and.	2-189
Electronic Speed Switch, MCF Electrical System, Principles of Operation	1-45
Emergency Controls and Indicators	2-33, F2-16
Anchorboard Assembly	2-35, F2-17, T2-14
Bilge Pump System.	2-47, F2-21, T2-18
Diesel Engine Emergency Stop	2-45, F2-20, T2-17
Emergency Shifting and Steering	2-49, F2-22, T2-19
Fire Detection System	2-37, F2-18, T2-15
Fire Suppression System	2-40, F2-19, T2-16
Emergency (Manual) Operation, Hydraulic System, Principles of Operation.	1-50
Emergency Procedures	2-185
Shutdown of Engine	2-185
Fire Aboard the Vessel	2-186

INDEX

Title	Page, Figure Table
NATO Receptacle	2-187
Steering	2-186, F2-56
End Rake Module, Intermediate Section, Equipment Description	1-26
End Rake Module, Beach/Sea End Section, Equipment Description	1-27
End Rake Modules, Powered Section, Equipment Description	1-14, Fl-5, Fi-6
Engine Alternator, MCF Electrical System, Principles of Operation	1-45
Engine, Emergency Shutdown of	2-185
Engine Governor, MCF Electrical System, Principles of Operation	1-45
Engine Junction Box Assembly (A4), Below Deck Controls	2-25, F2-10, T2-8
Engine Mounted Controls, Below Deck	2-22, F2-8, T2-6
Engine Operation (Port and Starboard), MCF Electrical System, Principles of Operation	1-45
Equipment Characteristics, Capabilities and Features	1-5
Equipment Data	1-32, T1-1 thru T1-5
Equipment Descriptions	1-5
F	
Fire Aboard the Vessel, Emergency Procedures	2-186
Fire Detection System, Emergency Controls and Indicators	2-37, F2-18, T2-15
Fire Suppression System, Emergency Controls and Indicators	2-40, F2-19, T2-16
Fire Suppression System, Principles of Operation	1-52, Fl-29
Flexor Connector Install, NP, Assembly and Prep for Use	2-135
Fuel System, MCF, Principles of Operation	1-39, Fl-24
Fuel System Controls, Below Deck	2-30, F2-14, T2-12
G	
General Information	1-3
Corrosion Prevention and Control (CPC)	1-3
Destruction of Army Material to Prevent Enemy Use	1-3
Maintenance Forms and Procedures	1-3
Official Nomenclature and Names(s)	1-4
Reporting Equipment Improvement Recommendations (EIRs)	1-3
Warranty Information	1-3
H	
Hydraulic Motor, Hydraulic System, Principles of Operation	1-50
Hydraulic Pump, Hydraulic System, Principles of Operation	1-50
Hydraulic Reservoir, Hydraulic System, Principles of Operation	1-50
Hydraulic Steering System Indicators, Below Deck	2-29, F2-13, T2-11
Hydraulic System, Principles of Operation	1-50, F1-28
Emergency (Manual) Operation	1-50
Hydraulic Motor	1-50
Hydraulic Pump	1-50
Hydraulic Reservoir	1-50
Manual Hydraulic Hand Pump	1-50
Powered (Normal) Operation	1-50
Valve, Dual Braking	1-50
Valve, Three Way	1-50

INDEX

Title	Page, Figure Table
Valve, Two Way	1-50
Valve Assembly, Way	1-50
I	
Initial Adjustments, Checks and Self-Test	2-171
Initial Pre-Start Checks	2-163, F2-51, F2-52, T2-23
Instruction Plate Locations, Decals and	2-171, F2-53, T2-24
Intermediate Section, Equipment Description	1-26, F1-16
Center Module	1-26
Connectors	1-26
End Rake Module	1-26
ISOPAK, Building an, Packing and Lifting, Stowage	3-39
ISOPAK, Lifting, Packing and Lifting, Stowage	3-45
ISOPAK, Disassembling, Removal/Storage	2-115
J	
Jamming and Electronic Countermeasures (ECM)	2-189
Junction Box Assembly (A4), Engine	2-25
L	
Location and Description of Major Components	1-5, F1-1
Lighting System, MCF Electrical System, Principles of Operation	1-46
Lubrication/Maintenance Instructions	3-2
M	
Maintenance Functions, General	3-2
Deck Fittings	3-5
MCF Module Integrity Testing	3-5
Preventive Maintenance	3-2
Ropes/Lines	3-5
Visual Inspection	3-2
Maintenance Procedures, Operators	3-37
Manual Hydraulic Hand Pump, Hydraulic System, Principles of Operation	1-50
Mast Enclosure Assembly, Operator's Cab, Controls and Indicators	2-15, F2-5, T2-4
Mast/Stub Mast Assembly Preparation for Shipment	2-183
MCF Auxiliary Equipment, Operating	2-182
MCF, Disengagement and Connector Stowage, NP, Assembly and Prep for Use	2-141, F2-45
MCF Electrical System, Principles of Operation	1-43, F1-26, F1-27
Bilge Flood Warning and Control System	1-43
Cab Auxiliary Systems	1-47
Communications	1-43
Electrical Interconnect System	1-47
Electronic Speed Switch	1-45
Engine Operation (Port and Starboard)	1-45
Engine Alternator	1-45

INDEX

Title	Page, Figure Table
Engine Governor	1-45
Lighting System	1-46
Navigation System	1-43
Operator Engine Control Alarms and Indicator System	1-45
Steering (Port and Starboard) Systems	1-46
Ventilation	1-43
MCF, Full Arrangement	F1-1
MCF, Lifting, NP, Assembly and Prep for Use	2-140, F2-44
MCF, Lifting, Packing and Lifting, Stowage	3-44
MCF Module Integrity Testing, General Maintenance	3-5
MCF-NL Interoperability, NP, Assembly and Prep for Use	2-143, F2-46
MCF, Principles of Operation	1-35
Cooling and Exhaust	1-37, F1-23
Drive Train	1-35, F1-22
Fuel System	1-39, F1-24
Ventilation System	1-41, F1-25
MCF Section and String Assembly, NP Assembly and Prep for Use	2-124, F2-32 thru F2-35
MCF Shipping and Movement, Preparation for	2-182
Mast/Stub Mast Assembly Prep for Shipment	2-183
Operator Cab and Plenum Prep for Shipment	2-183
Preparation for Movement	2-183
Propulsion Module Prep for Shipment	2-182
Propulsion Module Preservation	2-182
MCF Weight and Capacity, Packing and Lifting, Stowage	3-46
Module System Assembly, NP, Assembly and Prep for Use	2-131, F2-37 thru F2-39

N

NATO Receptacle, Emergency Procedures	2-187
Navigation Lights, Powered Section, Equipment Description	1-22, F1-12, F1-13
Navigation System, MCF Electrical System, Principles of Operation	1-43
Non-Powered Module/Non-Powered Section Assembly and Prep for Use	2-119
Nuclear, Biological and Chemical (NBC) Decontamination Procedures	2-189

O

Operation Under Usual Conditions	2-110
Operation Under Unusual Conditions	2-184
Operating Procedures	2-175, F2-54, F2-55
Operating MCF Auxiliary Equipment	2-182
Operator Cab and Plenum Preparation for Shipment	2-183
Operator's Cab, Powered Section, Equipment Description	1-18, F1-9
Operator's Cab Circuit Breaker Panel	2-13
Operator's Cab and Above Deck, Controls and Indicators	2-3, F2-1
Accessory Controls and Indicators	2-17, F2-6
Lower Control Panel (A2)	2-9, F2-3, T2-2
Mast Enclosure Assembly	2-15, F2-5, T2-4
Middle Control Panel (A1)	2-6, F2-2, T2-1
Operator's Cab Circuit Breaker Panel (A3)	2-13, F2-4, T2-3
Operator Check List, MCF	T2-23

INDEX

Title	Page, Figure Table
Operator Engine Control Alarms and Indicator System, MCF Electrical System, Principles of Operation	1-45
Operator Maintenance Procedures/Responsibility	3-37
Operator Procedures, MCF Functional Checks	2-190
P	
Packing and Lifting	3-38
Powered (Normal) Operation, Hydraulic System, Principles of Operation	1-50
Powered Section, Equipment Description	1-6, F1-2
Anchorboard	1-25, F1-15
Center Module	1-13, F1-4
Communication and Electronic Equipment	1-22
Connector Assemblies	1-16, F1-7, F1-8
End Rake Modules	1-14, F1-5, F1-6
Module Electrical Interconnection Cables	1-24, F1-14
Navigation Lights	1-22, F1-12, F1-13
Operator's Cab	1-18, F1-9
Propulsion Module	1-6, F1-3
Ventilation	1-20, F1-10, F1-11
Pre-Start Checks, Initial	2-163
Preparation for Movement, MCF	2-183
Preventive Maintenance, General	3-2
Preventive Maintenance Checks and Services (PMCS)	2-52, F2-23, T2-20
General	2-52
Procedures	2-52
Reporting Repairs	2-53
Leakage Definitions	2-53
Propulsion Module Assembly, Detailed Instructions	2-145
Propulsion Module Preparation for Shipment	2-182
Propulsion Module Preservation	12-182
Propulsion Module, Powered Section, Equipment Description	1-6, F1-3
Propulsion Module/Powered Section Assembly Preparation for Use	2-144, F247 thru F2-50
Propulsion Module Circuit Breaker Panel (A6), Below Deck	2-23, F2-9, T2-7
P-3 Adaptor Assembly, Beach/Sea End Section, Equipment Description	1-27, F1-20
P-3 Adapter Connector Assembly, NP, Assembly and Prep for Use	2-122, F2-31
R	
Removing and Staging Module Assemblies from Storage	2-110, T2-21
Disassembling an ISOPAK	2-115, F2-24, F2-25
Lifting Center Modules (Non-Powered)	2-118, F2-27
Lifting End Rakes	2-117, F2-26
MCF Nominal Weights	2-113, T2-22
Removal from Storage	2-110
Ropes/Lines, General Maintenance Functions	3-5
S	
Shifting and Steering, Emergency Controls and Indicators	2-49, F2-22, T2-19

INDEX

Title	Page, Figure Table
Shipping and Movement, MCF, Preparation for	2-182
Mast/Stub Mast Assembly Prep for Shipment	2-183
Operator Cab and Plenum Prep for Shipment	2-183
Preparation for Movement	2-183
Propulsion Module Prep for Shipment	2-182
Propulsion Module Preservation	2-182
Steering, Emergency	2-186, F2-56
Steering (Port and Starboard) Systems, MCF Electrical System, Principles of Operation.	1-46
Stowage	3-38
Building an ISOPAK	3-39
Interim Stacking	3-41
Lifting Center Modules	3-43
Lifting End Rakes	3-42
Lifting ISOPAK	3-45
Lifting MCF Section	3-44
MCF Weight and Capacity	3-46
T	
Troubleshooting Procedures	3-7, T3-1
U	
Unusual Environment/Weather, Operation Under	2-184
V	
Valve Assembly, Way, Hydraulic System, Principles of Operation	1-50
Valve, Dual Braking, Hydraulic System, Principles of Operation	1-50
Valve, Three Way, Hydraulic System, Principles of Operation	1-50
Valve, Two Way, Hydraulic System, Principles of Operation	1-50
Ventilation, Powered Section, Equipment Description	1-20, F1-10, F1-11
Ventilation System, MCF, Principles of Operation	1-41F1-25
Ventilation, MCF Electrical System, Principles of Operation	1-43
Visual Inspection, General Maintenance Functions	3-2
W	
Water System, Raw, Controls, Below Deck	2-31, F2-15, T2-13
Weight and Capacity, MCF	3-46
Weights, MCF Nominal	2-113, T2-22
Weights, Module Nominal	T3-2

By Order of the Secretary of the Army:

DENNIS J. REIMER
General, United States Army
Chief of Staff

Official:

JOEL B. HUDSON
Administrative Assistant to the
Secretary of the Army
03749

DISTRIBUTION:
To be distributed in accordance with DA Form 12-25-E, block No. 5440, requirements for TM 55-1945-205-10.

*U.S. GOVERNMENT PRINTING OFFICE: 1997-554-024/60236

RECOMMENDED CHANGES TO EQUIPMENT TECHNICAL PUBLICATIONS

THEN...JOT DOWN THE DOPE ABOUT IT ON THIS FORM. CAREFULLY TEAR IT OUT, FOLD IT AND DROP IT IN THE MAIL.

SOMETHING WRONG WITH PUBLICATION

FROM: (PRINT YOUR UNIT'S COMPLETE ADDRESS)

DATE SENT

PUBLICATION NUMBER	PUBLICATION DATE	PUBLICATION TITLE

BE EXACT PIN-POINT WHERE IT IS

PAGE NO.	PARA-GRAPH	FIGURE NO.	TABLE NO.

IN THIS SPACE, TELL WHAT IS WRONG AND WHAT SHOULD BE DONE ABOUT IT.

PRINTED NAME, GRADE OR TITLE AND TELEPHONE NUMBER	SIGN HERE

DA FORM 1 JUL 79 2028-2

PREVIOUS EDITIONS ARE OBSOLETE.

P.S.--IF YOUR OUTFIT WANTS TO KNOW ABOUT YOUR RECOMMENDATION MAKE A CARBON COPY OF THIS AND GIVE IT TO YOUR HEADQUARTERS.

The Metric System and Equivalents

Linear Measure

1 centimeter = 10 millimeters = .39 inch
1 decimeter = 10 centimeters = 3.94 inches
1 meter = 10 decimeters = 39.37 inches
1 dekameter = 10 meters = 32.8 feet
1 hectometer = 10 dekameters = 328.08 feet
1 kilometer = 10 hectometers = 3,280.8 feet

Weights

1 centigram = 10 milligrams = .15 grain
1 decigram = 10 centigrams = 1.54 grains
1 gram = 10 decigram = .035 ounce
1 dekagram = 10 grams = .35 ounce
1 hectogram = 10 dekagrams = 3.52 ounces
1 kilogram = 10 hectograms = 2.2 pounds
1 quintal = 100 kilograms = 220.46 pounds
1 metric ton = 10 quintals = 1.1 short tons

Liquid Measure

1 centiliter = 10 milliliters = .34 fl. ounce
1 deciliter = 10 centiliters = 3.38 fl. ounces
1 liter = 10 deciliters = 33.81 fl. ounces
1 dekaliter = 10 liters = 2.64 gallons
1 hectoliter = 10 dekaliters = 26.42 gallons
1 kiloliter = 10 hectoliters = 264.18 gallons

Square Measure

1 sq. centimeter = 100 sq. millimeters = .155 sq. inch
1 sq. decimeter = 100 sq. centimeters = 15.5 sq. inches
1 sq. meter (centare) = 100 sq. decimeters = 10.76 sq. feet
1 sq. dekameter (are) = 100 sq. meters = 1,076.4 sq. feet
1 sq. hectometer (hectare) = 100 sq. dekameters = 2.47 acres
1 sq. kilometer = 100 sq. hectometers = .386 sq. mile

Cubic Measure

1 cu. centimeter = 1000 cu. millimeters = .06 cu. inch
1 cu. decimeter = 1000 cu. centimeters = 61.02 cu. inches
1 cu. meter = 1000 cu. decimeters = 35.31 cu. feet

Approximate Conversion Factors

To change	*To*	*Multiply by*	*To change*	*To*	*Multiply by*
inches	centimeters	2.540	ounce-inches	newton-meters	.007062
feet	meters	.305	centimeters	inches	.394
yards	meters	.914	meters	feet	3.280
miles	kilometers	1.609	meters	yards	1.094
square inches	square centimeters	6.451	kilometers	miles	.621
square feet	square meters	.093	square centimeters	square inches	.155
square yards	square meters	.836	square meters	square feet	10.764
square miles	square kilometers	2.590	square meters	square yards	1.196
acres	square hectometers	.405	square kilometers	square miles	.386
cubic feet	cubic meters	.028	square hectometers	acres	2.471
cubic yards	cubic meters	.765	cubic meters	cubic feet	35.315
fluid ounces	milliliters	29.573	cubic meters	cubic yards	1.308
pints	liters	.473	milliliters	fluid ounces	.034
quarts	liters	.946	liters	pints	2.113
gallons	liters	3.785	liters	quarts	1.057
ounces	grams	28.349	liters	gallons	.264
pounds	kilograms	.454	grams	ounces	.035
short tons	metric tons	.907	kilograms	pounds	2.205
pound-feet	newton-meters	1.365	metric tons	short tons	1.102
pound-inches	newton-meters	.11375			

Temperature (Exact)

^{o}F	Fahrenheit temperature	5/9 (after subtracting 32)	Celsius temperature	^{o}C