THIS DOCUMENT HAS BEEN PURCHASED BY THE GOVERNMENT AND MAY BE REPRODUCED AND USED IN CONNECTION WITH ANY GOVERNMENT PROCUREMENT OR MAINTENANCE OPERATION.

NOTE: DATA MARKED WITH AN ASTERISK (*) IS PECULIAR TO A PRIOR MANUFACTURER. IT DOES NOT TAKE PRECEDENCE OVER ANY OTHER DATA ON THIS DRAWING, AND IS NOT CONTRACTUALLY BINDING ON EITHER THE CONTRACTOR OR THE GOVERNMENT.

REVISIONS			
LTR	DESCRIPTION	DATE	APPROVED

DRAFT

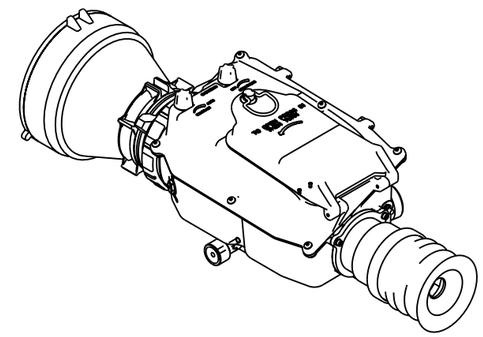

SCALE 1/2

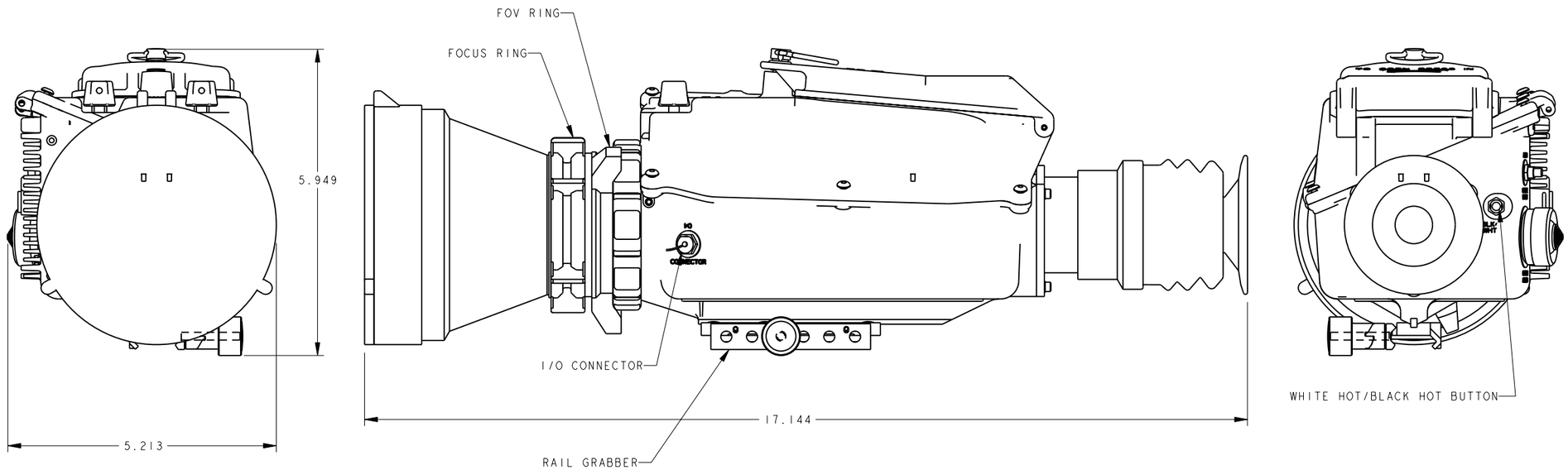

FIND NO.	QTY REQD	CAGE CODE	PART NO. OR IDENTIFYING NO.	NOMENCLATURE OR DESCRIPTION	SPECIFICATION	NOTE

PARTS LIST

REVISION													
SHEET													

SHEET REVISION RECORD

NEXT ASSY	USED ON

APPLICATION

UNLESS OTHERWISE SPECIFIED:
DIMENSIONS ARE IN INCHES
TOLERANCES ON:
FRACTIONS DECIMALS ANGLES

MATERIAL:

DRAWN
CHECKED
CECOM
REVIEWED
APPROVED
DATE

U.S. ARMY COMMUNICATIONS - ELECTRONICS COMMAND
FORT MONMOUTH NEW JERSEY 07703

ANPAS_13V3

SIZE	CAGEC	DWG NO.
D	80063	ANPAS_13V3

SCALE 1/1 SHEET 1 OF 2

WHEN REFERRING TO THIS DRAWING STATE DRAWING NO., APPLICABLE ISSUE LETTER IF ANY, AND DATE

ANSI/EIA Form 04 1 Jul 82

ADC CAD REV 31 AUG 94

HISA-FM 1470-82

REVISIONS			
LTR	DESCRIPTION	DATE	APPROVED

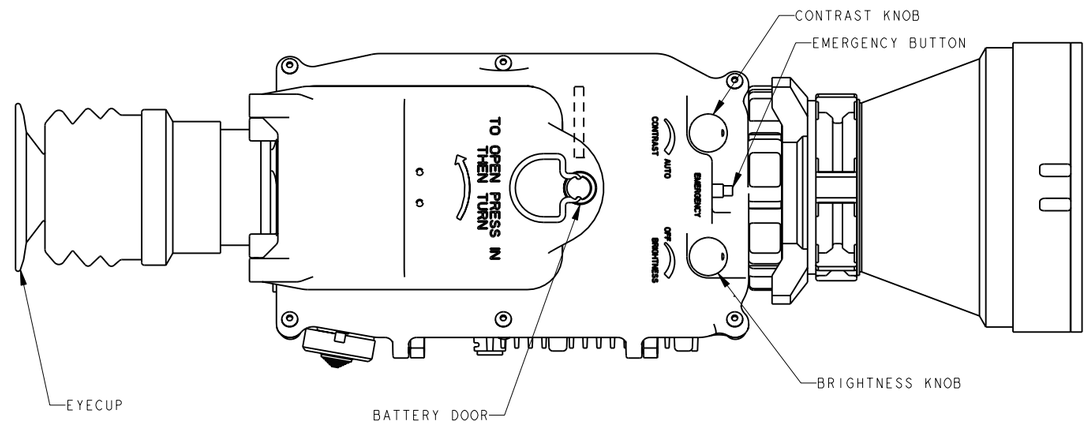

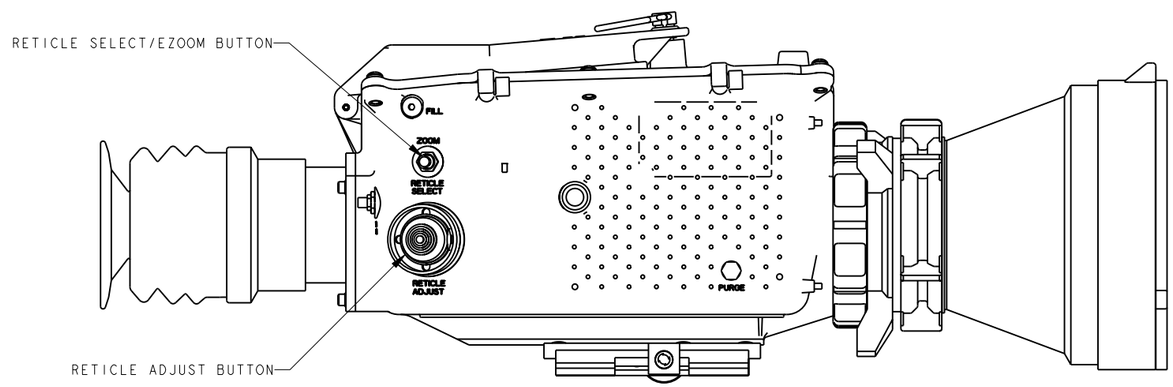

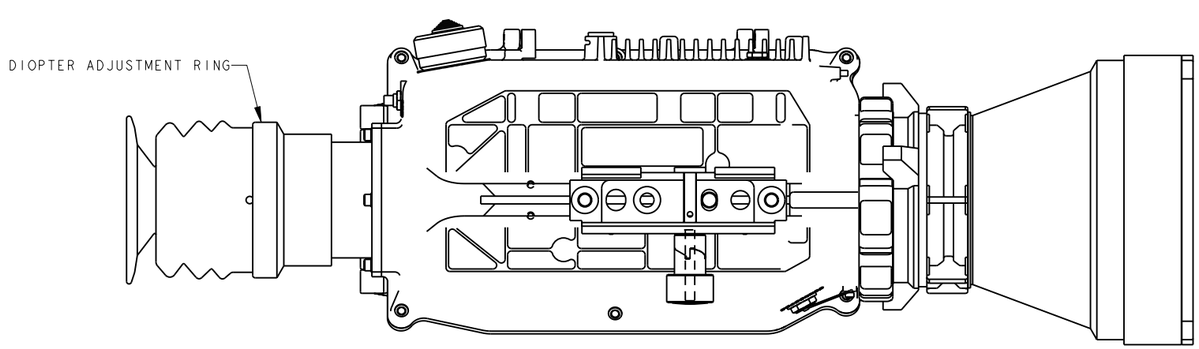

	CECOM	SIZE	CAGEC	DWG. NO.
DRAWN	REVIEWED	D	80063	ANPAS_13V3
CHECKED	APPROVED	SCALE 1/1		SHEET 2 OF 2

DRSEL-ED Form 04-1
1 Jul 82

ADC CAD REV 31 AUG 94

HISA-FM 1470-1-82