NOTES:

1. WHERE APPLICABLE REQUIREMENTS OF MIL-B-52088 APPLY.
2. TREAT AND PAINT IN ACCORDANCE WITH MIL-T-704, TYPE F FOR FERROUS METALS, TYPE G FOR NONFERROUS METALS.
3. WELD IN ACCORDANCE WITH MIL-B-52088 USING FIND NO. 123.
4. UNLESS OTHERWISE SPECIFIED CUT OR MACHINED SURFACES TO HAVE 500/
5. INSTALL FIND NO. 122 IN ACCORDANCE WITH MS33557.
6. ALL MATING SURFACES OF WEB PLATES, FLANGE ANGLES, HINGE AND CONNECTOR FORGINGS AND CLIP ANGLES SHALL BE SUCH THAT A .003 FEELER GAGE WILL NOT APPROACH CLOSER TO ANY RIVET SHANK THAN 3/16-INCH EXCEPT AS SPECIFIED IN NOTES 21 AND 22.
7. DIMENSIONS MEASURED ON A SLOPE ARE IDENTIFIED BY THE SYMBOL: ⊕
8. LENGTH OF FIND NO. 118 AND 119 TO BE AS REQUIRED, HOLES SHALL BE .781 ±.010 DIA.
9. LENGTH OF FIND NO. 120 TO BE AS REQUIRED, HOLES SHALL BE .531 ± 010 DIA.
10. REPAIRS TO STL CASTINGS SHALL BE IN ACCORDANCE WITH THE REQUIREMENTS OF SECTION XIII "UNFIRED PRESSURE VESSELS" OF THE "ASME BOILER AND PRESSURE VESSEL CODE" USING WELDING ELECTRODE COMPATIBLE WITH THE CASTING STEEL. ALL WELDS SHALL HAVE THE SAME PHYSICAL PROPERTIES AS THE FINISHED CASTING. THE DEPTH OF THE WELD REPAIR SHALL NOT EXCEED 20% OF THE CASTING THICKNESS.

SEE SHEET 3 FOR NOTES CONTINUED

SHEETS

22	21	20	19	18	17	16	15	14	13	12	11	10	9	8	7	6	5	4	3	2
J	J	J	M	M	P	M	N	P	P	J	P	P	N	J	N	J	J	F	U	R
J	J	J	M	M	P	M	V	P	P	J	P	P	N	J	N	J	J	F	U	R
J	J	J	M	M	P	M	V	P	P	J	P	P	N	J	N	J	J	F	U	R
J	J	J	M	M	P	M	V	P	P	J	P	P	N	J	Y	Y	Y	Y	Y	Y
J	J	J	M	M	P	M	AA	P	P	J	P	P	AA	AA	Y	Y	AA	AA	AA	Y
J	J	J	M	M	P	M	AA	P	P	J	P	P	AA	AA	Y	Y	AB	AA	AA	Y
AC	AC	AC	AC	AC	AC	AC	AC	AC	AC	AC	AC	AC	AC	AC	AC	AC	AC	AC	AC	AC

STATUS OF REVISIONS

ZONE	LTR	DESCRIPTION	DATE	APPROVED
	U	REDRAWN WITH CHANGE, SEE ECP NO. 87CE3525	10SEP87	VISSER
	V	SEE ECP NO. 87CE3925 AND 88CE3444	22JUL88	VISSER
	W	SEE ECP NO. 91HE3344	14JUN92	JLF
	Y	SEE ECP NO. 93HE3173	93-09-07	JLF
	AA	SEE ECP NO. 94HE3229	95-01-26	JLF
	AB	SEE ECP NO. 94HE3237	95-06-01	JLF
	AC	SEE ECP NO. RAD-B1084	01-01-05	GJU

FOR REPAIR ONLY

FIND NO.	PART OR IDENTIFYING NO.	QTY REQD	NOMENCLATURE OR DESCRIPTION	SPECIFICATION	MATERIAL
139	ALLOY 2014-T6	1	ANGLE, 2 1/2 X 2 1/2 X 1/4 (STOCK)	ASTM B221	ALUMINUM
138		1	ANGLE, 3 X 3 X 1/4 (STOCK)	ASTM A36	STEEL
137		1	PLATE, 3/8 (STOCK)	ASTM A36	STEEL
136	ALLOY 2014-T6	1	ANGLE, 4 X 3 X 1/4 (STOCK)	ASTM B221	ALUMINUM
135	ALLOY 2014-T6	1	ANGLE, 4 X 3 X 1/4 (STOCK)	ASTM B221	ALUMINUM
134	GR 1020	1	BAR, 1/2 X 2 1/4 (STOCK)	ASTM A575	STEEL
133	GR 1020	1	BAR, 1/2 X 2 1/4 (STOCK)	ASTM A575	STEEL
132	SEE NOTE 10	AR	WELDING ELECTRODE	AWS A5.1	STEEL
131	ALLOY 2014-T6	1	ANGLE, 2 1/2 X 2 1/2 X 1/4 (STOCK)	ASTM B221	ALUMINUM
130	ALLOY 2014-T6	1	ANGLE, 2 1/2 X 2 1/2 X 1/4 (STOCK)	ASTM B221	ALUMINUM
129	ALLOY 2014-T6	1	ANGLE, 2 1/2 X 2 1/2 X 1/4 (STOCK)	ASTM B221	ALUMINUM
128	ALLOY 2014-T6	2	CONNECTOR, FEMALE	ASTM B247	ALUMINUM
127	ALLOY 2014-T6	2	CONNECTOR, FEMALE	ASTM B247	ALUMINUM
126	GR 1018	1	BAR, 1/4 DIA (STOCK)	ASTM A108	STEEL
125	GR 1018	1	BAR, 1 1/4 DIA (STOCK)	ASTM A108	STEEL
124			DELETED		
123	CLASS E 7018	AR	WELDING ELECTRODE	AWS A5.1	STEEL
122	MS122125	4	INSERT, CRES, HELICAL COIL, .500-13		
			COARSE THD, 1 1/2 DIA, NOM LG		
121	MS24667-75	4	SCR, CAP, SCH, FLAT, CSK CAD PL,		STEEL
			1/2-13 UNC-3A X 1 1/4 LG		
120	GR 7277 TYPE 7	AR	RIVET,SOLID,FLAT-TOP CSK HD,1/2 DIA	MIL-R-12221	ALUMINUM
119	GR 7277 TYPE 7	AR	RIVET,SOLID,FLAT-TOP CSK HD,3/4 DIA	MIL-R-12221	ALUMINUM
118	GR 7277 TYPE 6	AR	RIVET,SOLID,BUT HD, 3/4 DIA	MIL-R-12221	ALUMINUM
117	BLACK FINISH	1	PIPE, 2 1/2 NOM SIZE EXTRA STRONG	ASTM A53	STEEL
116	ALLOY 2014-T6	3	ROD, 2 1/4 DIA	ASTM B211/B221	ALUMINUM
115	GR 1020	2	BAR, 3/8 X 3 (STOCK)	ASTM A575	STEEL
114					
113					
112					
111					
110	GR 1020	2	BAR 1/2 X 2 1/4 (STOCK)	ASTM A575	STEEL
109	ALLOY 2014-T6	1	WEDGE	ASTM B221	ALUMINUM
108	ALLOY 2014-T6	1	PLATE WEDGE	ASTM B221	ALUMINUM
107	ALY ALCLAD	1	SHEET, 1/8 (STOCK)	ASTM B209	ALUMINUM
	2014-T6				
106	GR 1020	3	BAR, 1/4 X 2 1/2 (STOCK)	ASTM A575	STEEL
105		1	PLATE, 1/4 (STOCK)	ASTM A36	STEEL
104	GR 1020	2	BAR, 1/4 X 3 (STOCK)	ASTM A575	STEEL
103	ALY ALCLAD	1	PLATE, 1/4 (STOCK)	ASTM B209	ALUMINUM
	2014-T6				
102	ALLOY 2014-T6	6	BAR, 1/4 X 2 1/4 (STOCK)	ASTM B211	ALUMINUM
101		1	PLATE, 1/4 (STOCK)	ASTM A36	STEEL
100	ALY ALCLAD	4	PLATE, 1/4 (STOCK)	ASTM B209	ALUMINUM
	2014-T6				
99	ALY ALCLAD	1	PLATE, 1/4 (STOCK)	ASTM B209	ALUMINUM
	2014-T6				
98	ALY ALCLAD	2	PLATE, 1/4 (STOCK)	ASTM B209	ALUMINUM
	2014-T6				
97	ALY ALCLAD	4	PLATE, 1/4 (STOCK)	ASTM B209	ALUMINUM
	2014-T6				
96	ALY ALCLAD	4	PLATE, 1/4 (STOCK)	ASTM B209	ALUMINUM
	2014-T6				
95	ALY ALCLAD	4	PLATE, 1/4 (STOCK)	ASTM B209	ALUMINUM
	2014-T6				
94	GR 1020	1	BAR, 1/4 X 2 1/2 (STOCK)	ASTM A575	STEEL
93	GR 1020	1	BAR, 1/4 X 2 1/2 (STOCK)	ASTM A575	STEEL
92	GR 1020	1	BAR, 1/4 X 2 1/2 (STOCK)	ASTM A575	STEEL
91	GR 1020	1	BAR, 1/4 X 2 1/2 (STOCK)	ASTM A575	STEEL
90	GR B	2	PLATE, 1/4 (STOCK)	ASTM A514	STEEL

PARTS LIST

FIND NO.	PART OR IDENTIFYING NO.	QTY REQD	NOMENCLATURE OR DESCRIPTION	SPECIFICATION	MATERIAL
89	ALLOY 2014-T6	4	BAR, 1/4 X 4 (STOCK)	ASTM B211	ALUMINUM
88		1	PLATE, 1/4 (STOCK)	ASTM A36	STEEL
87		1	PLATE, 1/4 (STOCK)	ASTM A36	STEEL
86	ALY ALCLAD	4	PLATE, 1/4 (STOCK)	ASTM A209	ALUMINUM
	2014-T6				
85		1	PLATE, 5/8 (STOCK)	ASTM A572	STEEL
84		1	PLATE, 5/8 (STOCK)	ASTM A572	STEEL
83		1	PLATE, 5/8 (STOCK)	ASTM A572	STEEL
82		1	PLATE, 5/8 (STOCK)	ASTM A572	STEEL
81		1	PLATE, 5/8 (STOCK)	ASTM A572	STEEL
80	CL80-50	1	RECEIVER, CASTING	ASTM A148	STEEL
79		1	PLATE, 1 (STOCK)	ASTM A572	STTEL
78	TYPE A OR F	1	PLATE, 1 (STOCK)	ASTM A514	STEEL
77		1	BAR, 1 X 1 1/2 (STOCK)	ASTM A572	STEEL
76		1	PLATE, 3/8 (STOCK)	ASTM A572	STEEL
75			DELETED		
74	ALY ALCLAD	1	PLATE, 3/8 (STOCK)	ASTM B209	ALUMINUM
	2014-T6				
73	ALY ALCLAD	1	PLATE, 3/8 (STOCK)	ASTM B209	ALUMINUM
	2014-T6				
72	ALLOY 2014-T6	3	BAR, 3/8 X 2 1/2 (STOCK)	ASTM B211	ALUMINUM
71	ALLOY 2014-T6	4	BAR, 3/8 X 2 1/2 (STOCK)	ASTM B211	ALUMINUM
70					
69	ALLOY 2014-T6	4	BAR, 3/8 X 2 1/2 (STOCK)	ASTM B211	ALUMINUM
68	ALLOY 2014-T6	1	BAR, 3/8 X 2 1/2 (STOCK)	ASTM B211	ALUMINUM
67		1	PLATE, 1/2 (STOCK)	ASTM A572	STEEL
66		1	PLATE, 1/2 (STOCK)	ASTM A572	STEEL
65		2	PLATE, 1/2 (STOCK)	ASTM A572	STEEL
64		2	PLATE, 1/2 (STOCK)	ASTM A572	STEEL
63		2	PLATE, 1/2 (STOCK)	ASTM A572	STEEL
62	ALLOY 6061-T6	1	PLATE, FLOOR 1/2, (STOCK)	ANS/ASTM B632	ALUMINUM
61		1	PLATE, 5/8 (STOCK)	ASTM A572	STEEL
60		1	PLATE, 5/8 (STOCK)	ASTM A572	STEEL
59		1	PLATE, 5/8 (STOCK)	ASTM A572	STEEL
58		1	PLATE, 5/8 (STOCK)	ASTM A572	STEEL
57		1	PLATE, 3/8 (STOCK)	ASTM A572	STEEL
56		1	PLATE, 3/8 (STOCK)	ASTM A572	STEEL
55	ALY ALCLAD	1	PLATE, 3/8 (STOCK)	ASTM B209	ALUMINUM
	2014-T6				
54	ALY ALCLAD	1	PLATE, 3/8 (STOCK)	ASTM B209	ALUMINUM
	2014-T6				
53		1	CHANNEL, 6", 8.2 # (STOCK)	ASTM A36	STEEL
52		2	CHANNEL, 6", 8.2 # (STOCK)	ASTM A36	STEEL
51	ALLOY 2014-T6	1	CHANNEL, 6", 2.83 # (STOCK)	ASTM B221	ALUMINUM
50	ALLOY 2014-T6	2	CHANNEL, 6", 2.83 # (STOCK)	ASTM B221	ALUMINUM
49	ALLOY 2014-T6	2	ANGLE, 2 1/2 X 2 1/2 X 1/4 (STOCK)	ASTM B221	ALUMINUM
48	ALLOY 2014-T6	2	ANGLE, 2 1/2 X 2 1/2 X 1/4 (STOCK)	ASTM B221	ALUMINUM
47	ALLOY 2014-T6	1	ANGLE, 2 1/2 X 2 1/2 X 1/4 (STOCK)	ASTM B221	ALUMINUM
46	ALLOY 2014-T6	2	ANGLE, 2 1/2 X 2 1/2 X 1/4 (STOCK)	ASTM B221	ALUMINUM
45	ALLOY 2014-T6	2	ANGLE, 3 1/2 X 2 1/2 X 3/8 (STOCK)	ASTM B221	ALUMINUM
44	ALLOY 2014-T6	1	ANGLE, 2 1/2 X 2 1/2 X 1/4 (STOCK)	ASTM B221	ALUMINUM

PARTS LIST

FIND NO.	PART OR IDENTIFYING NO.	QTY REQD	NOMENCLATURE OR DESCRIPTION	SPECIFICATION	MATERIAL
43	ALLOY 2014-T6	2	ANGLE, 2 1/2 X 2 1/2 X 1/4 (STOCK)	ASTM B221	ALUMINUM
42	ALLOY 2014-T6	1	ANGLE, 2 1/2 X 2 1/2 X 1/4 (STOCK)	ASTM B221	ALUMINUM
41	ALLOY 2014-T6	1	ANGLE, 2 1/2 X 2 1/2 X 1/4 (STOCK)	ASTM B221	ALUMINUM
40	ALLOY 2014-T6	2	ANGLE, 3 X 2 1/2 X 1/4 (STOCK)	ASTM B221	ALUMINUM
39		1	ANGLE, 3 X 3 X 1/4 (STOCK)	ASTM A36	STEEL
38		1	ANGLE, 3 X 3 X 1/4 (STOCK)	ASTM A36	STEEL
37		2	ANGLE, 3 X 3 X 1/4 (STOCK)	ASTM A36	STEEL
36		2	ANGLE, 3 X 3 X 1/4 (STOCK)	ASTM A36	STEEL
35	ALLOY 2014-T6	1	ANGLE, 3 X 3 X 1/4 (STOCK)	ASTM B221	ALUMINUM
34	ALLOY 2014-T6	1	ANGLE, 3 X 3 X 1/4 (STOCK)	ASTM B221	ALUMINUM
33	ALLOY 2014-T6	2	ANGLE, 3 X 3 X 1/4 (STOCK)	ASTM B221	ALUMINUM
32	ALLOY 2014-T6	2	ANGLE, 3 X 3 X 1/4 (STOCK)	ASTM B221	ALUMINUM
31	ALLOY 2014-T6	1	ANGLE, 3 X 3 X 1/4 (STOCK)	ASTM B221	ALUMINUM
30	ALLOY 2014-T6	1	ANGLE, 3 X 3 X 1/4 (STOCK)	ASTM B221	ALUMINUM
29	ALLOY 2014-T6	2	ANGLE, 3 X 3 X 1/4 (STOCK)	ASTM B221	ALUMINUM
28	ALLOY 2014-T6	2	ANGLE, 3 X 3 X 1/4 (STOCK)	ASTM B221	ALUMINUM
27	ALLOY 2014-T6	1	ANGLE, 3 X 2 1/2 X 1/4 (STOCK)	ASTM B221	ALUMINUM
26	ALLOY 2014-T6	2	ANGLE, 3 X 2 1/2 X 1/4 (STOCK)	ASTM B221	ALUMINUM
25	ALLOY 2014-T6	1	ANGLE, 3 X 2 1/2 X 1/4 (STOCK)	ASTM B221	ALUMINUM
24		1	ANGLE, 3 X 3 X 1/4 (STOCK)	ASTM A36	STEEL
23	ALLOY 2014-T6	1	ANGLE, 4 X 3 X 1/4 (STOCK)	ASTM B221	ALUMINUM
22	ALLOY 2014-T6	1	ANGLE, 4 X 3 X 1/4 (STOCK)	ASTM B221	ALUMINUM
21		2	ANGLE, 4 X 3 X 1/4 (STOCK)	ASTM A36	STEEL
20		2	ANGLE, 5 X 3 X 3/8 (STOCK)	ASTM A36	STEEL
19	ALLOY 2014-T6	2	ANGLE, 4 X 4 X 1/4 (STOCK)	ASTM B221	ALUMINUM
18	ALLOY 2014-T6	2	ANGLE, 4 X 4 X 1/4 (STOCK)	ASTM B221	ALUMINUM
17	ALLOY 2014-T6	2	ANGLE, 5 X 3 X 3/8 (STOCK)	ASTM B221	ALUMINUM
16	ALLOY 2014-T6	1	ANGLE, 5 X 3 X 3/8 (STOCK)	ASTM B221	ALUMINUM
15	ALLOY 2014-T6	1	ANGLE, 5 X 3 X 3/8 (STOCK)	ASTM B221	ALUMINUM
14	ALLOY 2014-T6	2	ANGLE, 5 X 3 X 3/8 (STOCK)	ASTM B221	ALUMINUM
13	ALLOY 2014-T6	2	ANGLE, 5 X 3 X 3/8 (STOCK)	ASTM B221	ALUMINUM
12		1	ANGLE, 5 X 3 1/2 X 3/8 (STOCK)	ASTM A36	STEEL
11		1	ANGLE, 5 X 5 X 1/2 (STOCK)	ASTM A36	STEEL
10	ALLOY 2014-T6	1	ANGLE, 5 X 5 X 3/8 (STOCK)	ASTM B221	ALUMINUM
9	ALLOY 2014-T6	1	ANGLE, 5 X 5 X 3/8 (STOCK)	ASTM B221	ALUMINUM
8	ALLOY 2014-T6	1	ANGLE, 5 X 5 X 3/8 (STOCK)	ASTM B221	ALUMINUM
7	ALLOY 2014-T6	1	ANGLE, 5 X 5 X 3/8 (STOCK)	ASTM B221	ALUMINUM
6	ALLOY 2014-T6	1	ANGLE, 5 X 5 X 3/8 (STOCK)	ASTM B221	ALUMINUM
5	ALLOY 2014-T6	1	ANGLE, 5 X 5 X 3/8 (STOCK)	ASTM B221	ALUMINUM
4	ALLOY 2014-T6	1	ANGLE, 5 X 5 X 3/8 (STOCK)	ASTM B221	ALUMINUM
3	ALLOY 2014-T6	1	ANGLE, 5 X 5 X 3/8 (STOCK)	ASTM B221	ALUMINUM
2	ALLOY 2014-T6	2	CONNECTOR, FEMALE	ASTM B247	ALUMINUM
1	ALLOY 2014-T6	2	CONNECTOR, FEMALE	ASTM B247	ALUMINUM

PARTS LIST

DISTRIBUTION STATEMENT A.
APPROVED FOR PUBLIC RELEASE:
DISTRIBUTION IS UNLIMITED.

UNLESS OTHERWISE SPECIFIED DIMENSIONS ARE: mm/in.
FRACTIONS (.X) ± 1/16
TWO PLACE (.XX) ± .03
THREE PLACE (.XXX) ± —
ANGLES ± 2°
THIRD ANGLE PROJECTION
DO NOT SCALE THIS DRAWING
FOR INTERPRETATION OF DRAWING DOD-STD-100 APPLIES
REMOVE BURRS AND BREAK SHARP EDGES: SHARP EDGES .015 TO .045; FILLET RADII — TO —
MATERIAL —

DRAWN BY JAS/HA — DATE 10 JUL 87
CHECKED BY
CONTRACT NO.
DESIGN APPROVAL — DATE 10 SEP 87
APPROVED FOR PROCUREMENT — DATE 10 Sep 87

U.S. ARMY
BELVOIR RESEARCH, DEVELOPMENT, AND ENGINEERING CENTER
FORT BELVOIR, VIRGINIA 22060-5606

PANEL STRUCTURE, END, FEMALE

SIZE A1 — FSCM 97403 — DWG NO. 13211E7844
SCALE 1/8 — SHEET 1 OF 22

FACOM

Attachment A

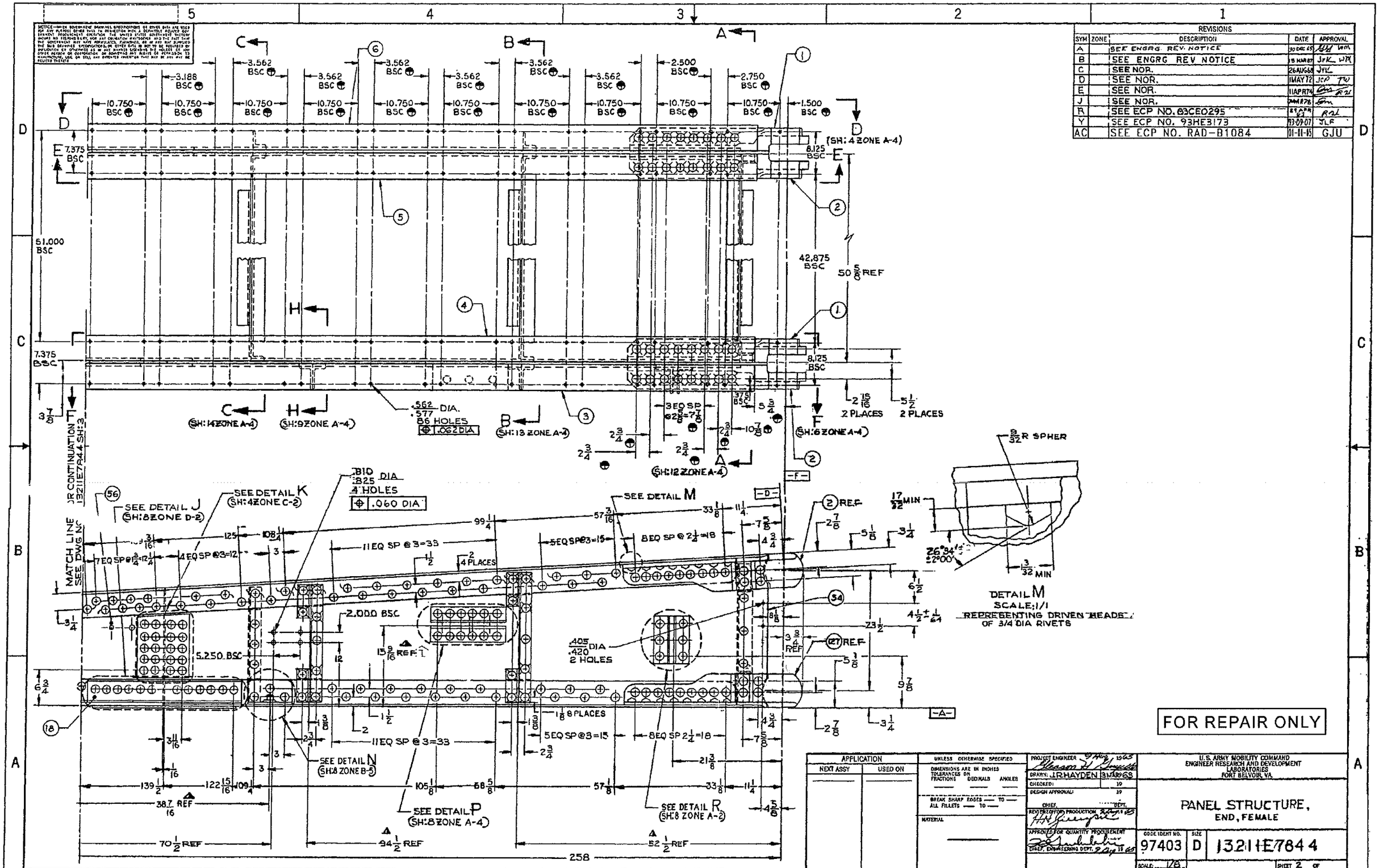

REVISIONS
SYM | ZONE | DESCRIPTION | DATE | APPROVAL
A | SEE ENGRG. REV. NOTICE | 30 DEC 65
B | SEE ENGRG REV NOTICE | 15 MAR 67 | JVK WM
C | SEE NOR. | 26 AUG 68 | JVK
D | SEE NOR. | 11 MAY 72 | JCP TW
E | SEE NOR. | 11 APR 74
J | SEE NOR. | 24 MAR 78
R | SEE ECP NO. 83CE0295 | 29 APR 83 | RAL
Y | SEE ECP NO. 93HE3173 | 93-09-07 | JLF
AC | SEE ECP NO. RAD-B1084 | 01-11-15 | GJU
(SH: 4 ZONE A-4)
(SH: 14 ZONE A-4)
(SH: 9 ZONE A-4)
(SH: 13 ZONE A-4)
(SH: 12 ZONE A-4)
(SH: 6 ZONE A-4)
.562 DIA. .577 86 HOLES .062 DIA
.810 .825 DIA 4 HOLES .060 DIA
SEE DETAIL J (SH: 8 ZONE D-2)
SEE DETAIL K (SH: 4 ZONE C-2)
SEE DETAIL M
SEE DETAIL N (SH: 8 ZONE B-5)
SEE DETAIL P (SH: 8 ZONE A-4)
SEE DETAIL R (SH: 8 ZONE A-2)
MATCH LINE FOR CONTINUATION SEE DWG NO. 13211E7844 SH: 3
DETAIL M
SCALE: 1/1
REPRESENTING DRIVEN HEADS OF 3/4 DIA RIVETS
9/32 R SPHER
17/32 MIN
26°34' ±2°00'
1/32 MIN
.405 .420 DIA 2 HOLES
11 EQ SP @ 3=33
5 EQ SP @ 3=15
8 EQ SP @ 2 1/4=18
7 EQ SP @ 1 3/4=12 1/4
4 EQ SP @ 3=12
2.000 BSC
5.250 BSC
15 9/16 REF
1 1/8 8 PLACES
2 4 PLACES
2 REF
27 REF
3 3/4 REF
38 7/16 REF
70 1/2 REF
94 1/2 REF
52 1/2 REF
258
FOR REPAIR ONLY
APPLICATION
NEXT ASSY
USED ON
UNLESS OTHERWISE SPECIFIED
DIMENSIONS ARE IN INCHES
TOLERANCES ON FRACTIONS DECIMALS ANGLES
BREAK SHARP EDGES — TO —
ALL FILLETS — TO —
MATERIAL
PROJECT ENGINEER
DRAWN: J.R. HAYDEN 3 MAR 63
CHECKED:
DESIGN APPROVAL:
CHIEF, DEPT.
REVIEWED FOR PRODUCTION
APPROVED FOR QUANTITY PROCUREMENT
CHIEF, ENGINEERING DEPT.
U.S. ARMY MOBILITY COMMAND
ENGINEER RESEARCH AND DEVELOPMENT LABORATORIES
FORT BELVOIR, VA.
PANEL STRUCTURE, END, FEMALE
CODE IDENT NO. 97403
SIZE D
13211E7844
SCALE: 1/8
SHEET 2 OF
TACOM

REVISIONS				
ZONE	LTR	DESCRIPTION	DATE	APPROVED
	U	REDRAWN WITH CHANGE, SEE ECP NO. 87CE3525	[illegible]	MHV
	Y	SEE ECP NO. 93HE3173	93-09-07	[illegible]
	AA	SEE ECP NO. 94HE3229	95 01-26	[illegible]
	AC	SEE ECP NO. RAD-B1084	01-01-05	GJU

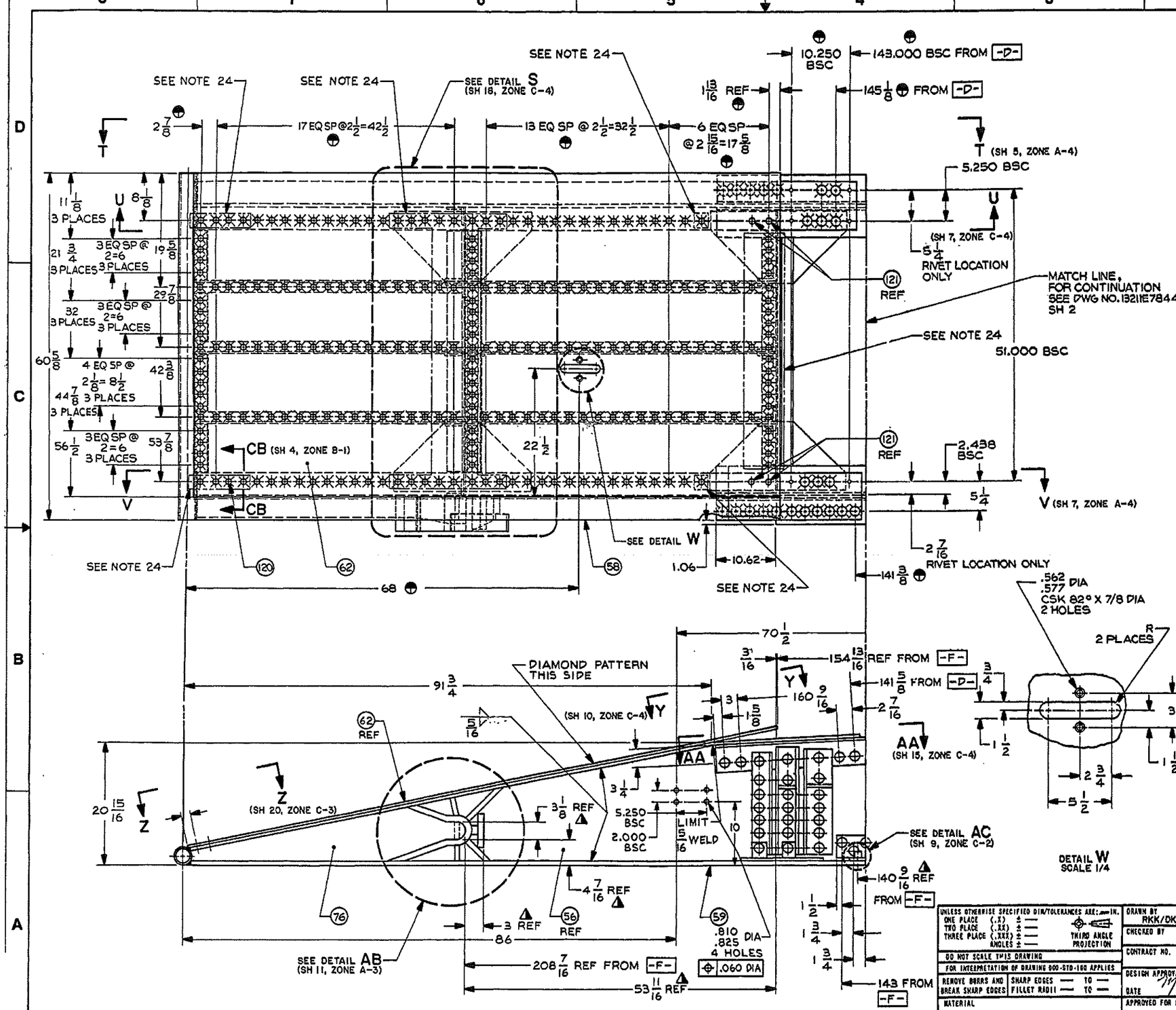

FOR REPAIR ONLY

NOTES: (CONTINUED)

11. FOR INTERPRETATION OF: THREAD IDENTIFICATION DATA, SEE FED-STD-H28. (THE TYPE OF RIVET TO BE USED IS SPECIFIED IN THE LIST OF MATERIALS. WHERE THE LIST OF MATERIALS SPECIFIES A MANUFACTURED CSK HD RIVET, THE STRUCTURAL SYMBOL (CSK NEAR SIDE) OR (CSK FAR SIDE) ON THE COMPONENT DETAILS ON THE MAIN FIELD OF THE DRAWING DESIGNATES THE ORIENTATION OF THE MANUFACTURED CSK HD.)
12. UNLESS OTHERWISE SPECIFIED, ALL RADII TO BE 1/32 MAX.
13. HOLES LOCATED VERTICALLY TO ACCOMMODATE PIPE AND SPRING RETAINER (SEE SH 6 ZONE A5).
14. FIND NO. 127 AND 128 IDENTICAL TO FIND NO. 1 AND 2 EXCEPT .562 .577 DIA HOLES OMITTED IN BOTTOM CONNECTORS.
15. FOR FINAL DIMENSIONS IDENTIFIED BY THE SYMBOL: △ SEE DWG D13211E7843.
16. EACH CASTING SHALL BE MAGNETIC PARTICLE INSPECTED IN ACCORDANCE WITH MIL-STD-271.
17. QUALITY ASSURANCE PROVISIONS:
    A. CLASSIFICATION OF CHARACTERISTICS:
       CRITICAL - NONE DEFINED
       MAJOR - 100% INSPECTED
       M107, M108, M110 THRU M132
18. OPTIONAL MATERIAL FOR FIND NO. 102, 68, 69, 71, 72, AND 89: AL ALLOY 2014-T6 CONFORMING TO SPECIFICATION ASTM B209 (PLATE) OR ASTM B221 (BAR), WIDTH AS REQUIRED BY LIST OF MATERIALS ± 1/32.
19. OPTIONAL MATERIAL FOR FIND NO. 1, 2, 127 AND 128: AL ALLOY 2014-T6 CONFORMING TO FEDERAL SPECIFICATION QQ-A-367.
20. FIND NO. 118 ON SHEETS 15, 16, 18 AND 19 WITH ▨ SYMBOL OR FLAT HEAD VIEWS INDICATE THAT HEADS MAY BE GROUND TO 3/8 MINIMUM HEIGHT TO FACILITATE DRIVING OF ADJACENT RIVETS.
21. APPLICATION OF THE .003 FEELER GAGE IS NOT REQUIRED AT THE MATING SURFACES BETWEEN THE RAMP GIRDER FLANGE AND THE RAMP PLATE.
22. MATING SURFACES OF THE 2-1/2 IN. CROSS BRACE ANGLES, THE CROSS BRACE ANGLES AND THE CLIP ANGLES, AND THE LIFTING LUG PLATES AND THE WEB PLATE SHALL BE SUCH THAT A .010 FEELER GAGE WILL NOT APPROACH CLOSER TO THE RIVET SHANK THAN 3/16 INCH.
23. OPTIONAL MATERIAL FOR FIND NO. 13, 14, 15 AND 16: ANGLE, AL ALY, 4 1/2 X 2 1/2 X 3/8 STK, ALLOY 2014-T6 IN ACCORDANCE WITH ASTM B221.
24. 1/2 DIAMETER TYPE 6 BUTTON HEAD RIVETS MAY BE USED IN LIEU OF 1/2 DIAMETER TYPE 7 COUNTERSUNK HEAD RIVETS, PROVIDED WORKMANSHIP REQUIREMENTS OF PARAGRAPH 30.3.3, APPENDIX OF MIL-B-52088 ARE MET. THE MANUFACTURED BUTTON HEAD IS TO BE INSTALLED ON THE UNDERSIDE OF THE TREAD PLATE AND THE FORMED HEAD IS TO BE COUNTERSUNK ON THE TOPSIDE OF THE TREAD PLATE.

SEE SHEET 5 FOR NOTES CONTINUATION

UNLESS OTHERWISE SPECIFIED DIM/TOLERANCES ARE: — IN.
ONE PLACE (.X) ± —
TWO PLACE (.XX) ± —
THREE PLACE (.XXX) ± —
ANGLES ± —
THIRD ANGLE PROJECTION
DO NOT SCALE THIS DRAWING
FOR INTERPRETATION OF DRAWING DOD-STD-100 APPLIES
REMOVE BURRS AND BREAK SHARP EDGES — SHARP EDGES — TO — FILLET RADII — TO —
MATERIAL —

DRAWN BY RKK/DKF — DATE 16 JUL 87
CHECKED BY
CONTRACT NO.
DESIGN APPROVAL — DATE
APPROVED FOR PROCUREMENT — DATE

U.S. ARMY
BELVOIR RESEARCH, DEVELOPMENT, AND ENGINEERING CENTER
FORT BELVOIR, VIRGINIA 22060-5606

PANEL STRUCTURE, END, FEMALE

SIZE A1 — FSCM 97403 — DWG NO. 13211E7844
SCALE 1/8 — SHEET 3

REVISIONS				
SYM	ZONE	DESCRIPTION	DATE	APPROVAL
C		SEE NOR.	26 JUN 68	[illegible]
D		SEE NOR.	11 MAY 72	[illegible]
E		SEE NOR.	11 APR 74	[illegible]
F		SEE NOR.	[illegible]	[illegible]
Y		SEE ECP NO. 93HE3173	93-09-07	[illegible]
AA		SEE ECP NO. 94HE3229	95-01-26	[illegible]
AC		SEE ECP NO. RAD-B1084	01-01-05	GJU

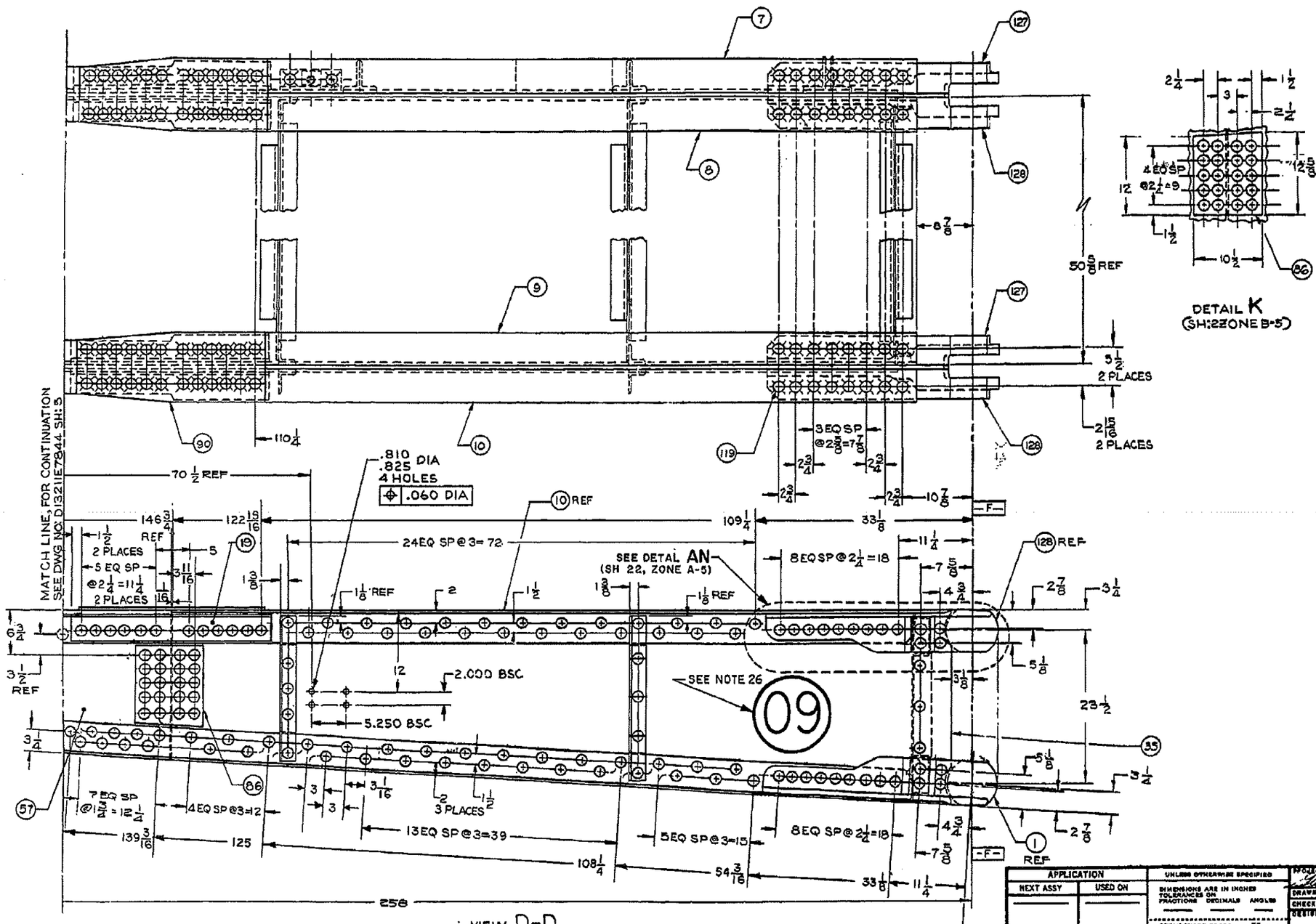

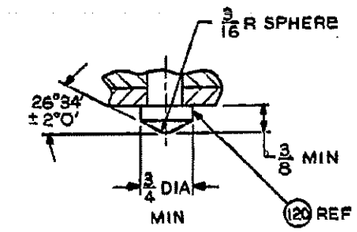

SECTION CB-CB
(SH 3, ZONE C-5)
SCALE 1/1
ROTATED 90° CW
REPRESENTING DRIVEN HEADS
(CONE POINT) OF ALL 1/2 DIA RIVETS

FOR REPAIR ONLY

APPLICATION	
NEXT ASSY	USED ON

UNLESS OTHERWISE SPECIFIED
DIMENSIONS ARE IN INCHES
TOLERANCES ON
FRACTIONS DECIMALS ANGLES
BREAK SHARP EDGES — TO —
ALL FILLETS — TO —
MATERIAL

PROJECT ENGINEER
DRAWN: J.R. HAYDEN 4 NOV 1968
CHECKED:
DESIGN APPROVAL:
CHIEF, DEPT.
REVIEWED FOR PRODUCTION
APPROVED FOR QUANTITY PROCUREMENT
CHIEF ENGINEERING DEPT.

U.S. ARMY MOBILITY COMMAND
ENGINEER RESEARCH AND DEVELOPMENT LABORATORIES
FORT BELVOIR, VA.

PANEL STRUCTURE, END, FEMALE

CODE IDENT. NO. 97403 SIZE D 1321IE7844
SCALE 1/8 SHEET 4 OF

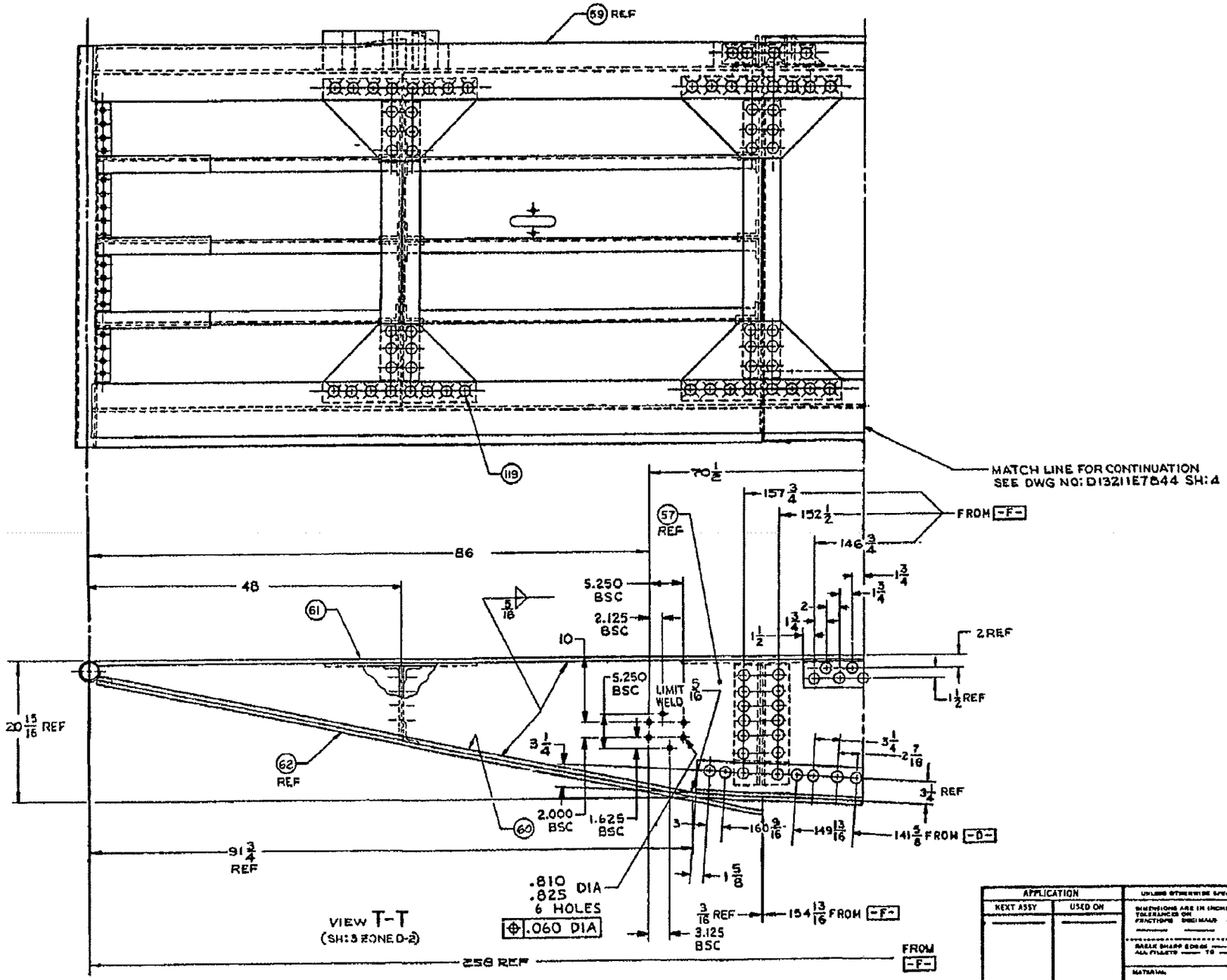

REVISIONS				
SYM	ZONE	DESCRIPTION	DATE	APPROVAL
A		SEE ENGRG. REV. NOTICE	[illegible]	[illegible]
D		SEE NOR.	1 MAY 72	[illegible]
J		SEE NOR.	[illegible]	[illegible]
Y		SEE ECP NO. 93HE3173	77-07-07	JLF
AA		SEE ECP NO. 94HE3229	95-01-26	JLF
AB		SEE ECP NO. 94HE3237	5-06-31	JLF
AC		SEE ECP NO. RAD-B1084	01-01-05	GJU

NOTES: (CONTINUED FROM SHEET 3)

25. THE CROSS SECTION OF ANGLES, FIND NO. 22, 23, 26, 40, 135 AND 136 SHALL BE AMERICAN STANDARD SHAPE.

26. PAINT A 12.00 INCH NOMINAL DIAMETER CIRCLE WITH A 1.00 INCH WIDE LINE CONTAINING THE NUMERIC CHARACTERS CENTERED WITHIN THE CIRCLE IN 1.00 INCH WIDE LINES BY 7.00 INCH HIGH CHARACTERS IN ACCORDANCE WITH MIL-T-704, TYPE G. COLOR BLACK NO. 37038 IN ACCORDANCE WITH FED-STD-595.

FOR REPAIR ONLY

APPLICATION	
NEXT ASSY	USED ON

UNLESS OTHERWISE SPECIFIED
DIMENSIONS ARE IN INCHES
TOLERANCES ON
FRACTIONS DECIMALS ANGLES
BREAK SHARP EDGES — TO —
ALL FILLETS — TO —
MATERIAL

PROJECT ENGINEER [illegible] 1965
DRAWN: J.R. HAYDEN 13 DEC 1963
CHECKED: 19
DESIGN APPROVAL: 19
CHIEF, DEPT
REVIEWED FOR PRODUCTION [illegible]
APPROVED FOR QUANTITY PROCUREMENT [illegible]
CHIEF, ENGINEERING DEPT [illegible]

U.S. ARMY MOBILITY COMMAND
ENGINEER RESEARCH AND DEVELOPMENT LABORATORIES
FORT BELVOIR, VA.

PANEL STRUCTURE,
END, FEMALE

CODE IDENT. NO. 97403 | SIZE D | 13211E7844

SCALE 1/8 | SHEET 5 OF

FACOM

NOTICE: WHEN GOVERNMENT DRAWINGS, SPECIFICATIONS, OR OTHER DATA ARE USED FOR ANY PURPOSE OTHER THAN IN CONNECTION WITH A DEFINITELY RELATED GOVERNMENT PROCUREMENT OPERATION, THE UNITED STATES GOVERNMENT THEREBY INCURS NO RESPONSIBILITY, NOR ANY OBLIGATION WHATSOEVER; AND THE FACT THAT THE GOVERNMENT MAY HAVE FORMULATED, FURNISHED, OR IN ANY WAY SUPPLIED THE SAID DRAWINGS, SPECIFICATIONS, OR OTHER DATA IS NOT TO BE REGARDED BY IMPLICATION OR OTHERWISE AS IN ANY MANNER LICENSING THE HOLDER OR ANY OTHER PERSON OR CORPORATION, OR CONVEYING ANY RIGHTS OR PERMISSION TO MANUFACTURE, USE OR SELL ANY PATENTED INVENTION THAT MAY IN ANY WAY BE RELATED THERETO.

REVISIONS

SYM	ZONE	DESCRIPTION	DATE	APPROVAL
A		SEE ENGRG. REV. NOTICE	30 DEC 69	
D		SEE NOR.	1 MAY 72	JCP
J		SEE NOR.	7 MAR 78	
Y		SEE ECP NO. 93HE3173	93-09-07	JLF
AC		SEE ECP NO. RAD-B1084	01-01-05	GJU

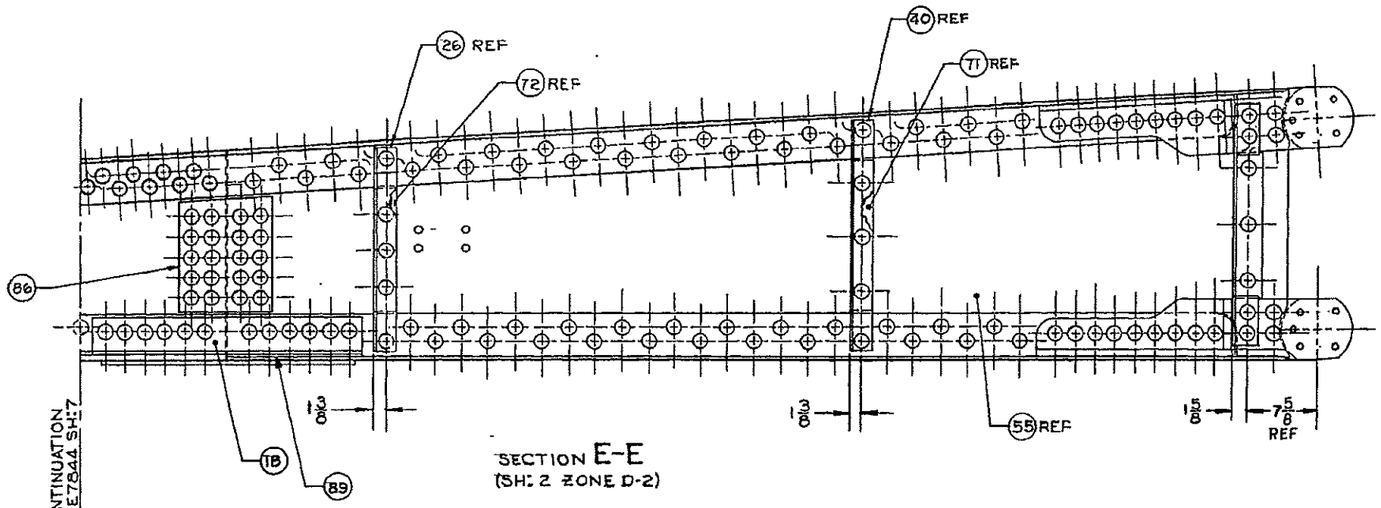

SECTION E-E
(SH: 2 ZONE D-2)

MATCH LINE, FOR CONTINUATION SEE DWG NO: D13211E7844 SH:7

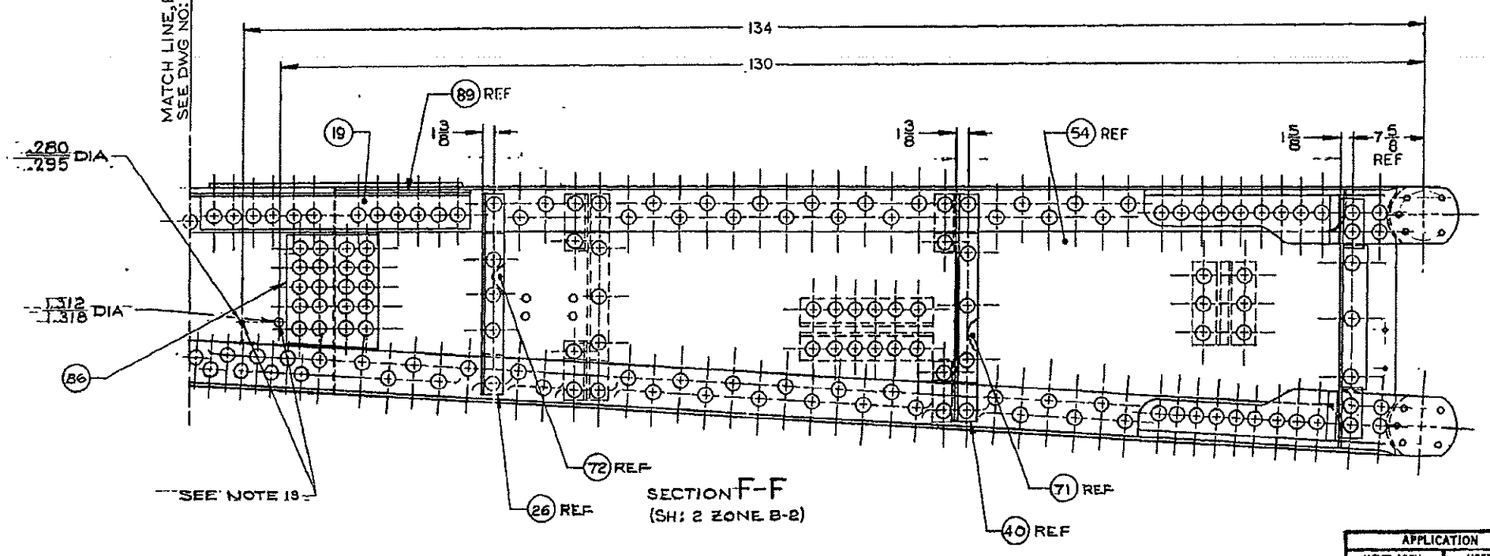

SECTION F-F
(SH: 2 ZONE B-2)

FOR REPAIR ONLY

APPLICATION	
NEXT ASSY	USED ON

UNLESS OTHERWISE SPECIFIED
DIMENSIONS ARE IN INCHES
TOLERANCES ON
FRACTIONS DECIMALS ANGLES
BREAK SHARP EDGES — TO —
ALL FILLETS — TO —
MATERIAL

PROJECT ENGINEER 19
DRAWN: J.R. HAYDEN 30 OCT 63
CHECKED: 19
DESIGN APPROVAL: 19
CHIEF, DEPT.
REVIEWED FOR PRODUCTION
APPROVED FOR QUANTITY PROCUREMENT
CHIEF, ENGINEERING DEPT.

U.S. ARMY MOBILITY COMMAND
ENGINEER RESEARCH AND DEVELOPMENT LABORATORIES
FORT BELVOIR, VA.

PANEL STRUCTURE, END, FEMALE

CODE IDENT. NO. 97403 | SIZE D | 13211E7844

SCALE: 1/8 | SHEET 6 OF

TACOM

NOTICE. THESE DRAWINGS AND SPECIFICATIONS, OR OTHER DATA AND INFORMATION USED FOR ANY PURPOSE OTHER THAN IN CONNECTION WITH A DEFINITELY RELATED GOVERNMENT PROCUREMENT OPERATION, THE UNITED STATES GOVERNMENT DOES NOT THEREBY INCUR ANY RESPONSIBILITY, NOR ANY OBLIGATION WHATSOEVER, AND THE FACT THAT THE GOVERNMENT MAY HAVE FORMULATED, FURNISHED, OR IN ANY WAY SUPPLIED THE SAID DRAWINGS, SPECIFICATIONS, OR OTHER DATA IS NOT TO BE REGARDED BY IMPLICATION OR OTHERWISE AS IN ANY MANNER LICENSING THE HOLDER OR ANY OTHER PERSON OR CORPORATION, OR CONVEYING ANY RIGHTS OR PERMISSION TO MANUFACTURE, USE, OR SELL ANY PATENTED INVENTION THAT MAY IN ANY WAY BE RELATED THERETO.

REVISIONS				
SYM	ZONE	DESCRIPTION	DATE	APPROVAL
C		SEE NOR.	26AUG68	JVL
D		SEE NOR.	1MAY72	[illegible]
E		SEE NOR.	11APR74	[illegible]
N		SEE ECP NO. 82CE1109	8JAN83	[illegible]
Y		SEE ECP NO. 93HE3173	93-09-07	JLF
AC		SEE ECP NO. RAD-B1084	91-01-15	GJU

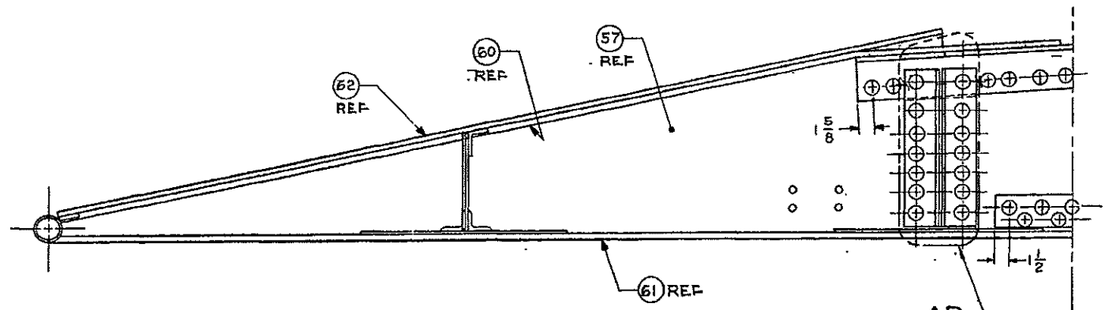

SECTION U-U
(SH:3 ZONE D-2)

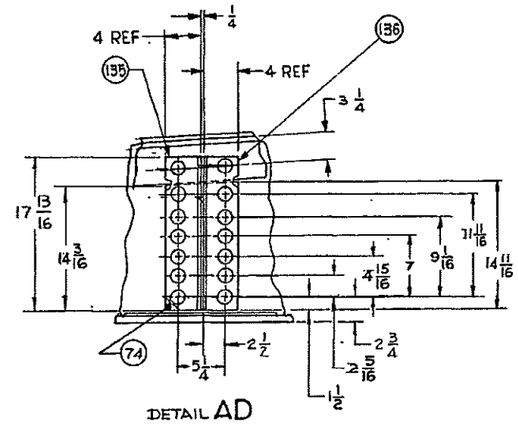

DETAIL AD

MATCH LINE, FOR CONTINUATION
SEE DWG NO: D13211E7844 SH:6

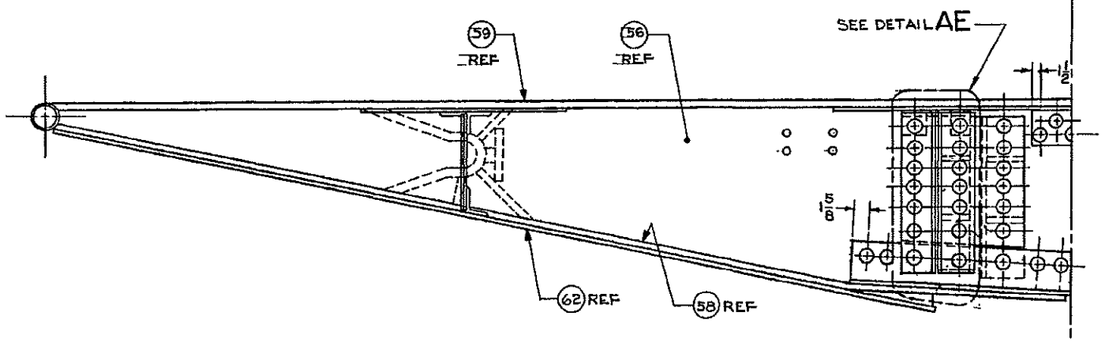

SECTION V-V
(SH:3 ZONE C-2)

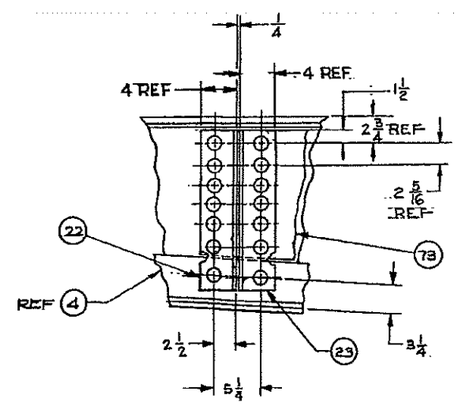

DETAIL AE

FOR REPAIR ONLY

APPLICATION	
NEXT ASSY	USED ON
—	—

UNLESS OTHERWISE SPECIFIED
DIMENSIONS ARE IN INCHES
TOLERANCES ON
FRACTIONS DECIMALS ANGLES
— — —
BREAK SHARP EDGES — TO —
ALL FILLETS — TO —
MATERIAL
—

PROJECT ENGINEER 19
DRAWN: D. LONG OCT 19 83
CHECKED: 19
DESIGN APPROVAL: 19
CHIEF, DEPT.
REVIEWED FOR PRODUCTION 19
APPROVED FOR QUANTITY PROCUREMENT
CHIEF, ENGINEERING DEPT. 19

U.S. ARMY MOBILITY COMMAND
ENGINEER RESEARCH AND DEVELOPMENT LABORATORIES
FORT BELVOIR, VA.

PANEL STRUCTURE,
END, FEMALE

CODE IDENT. NO. 97403 | SIZE D | 13211E7844
SCALE: 1/8 | SHEET 7 OF

TACOM

REVISIONS				
SYM	ZONE	DESCRIPTION	DATE	APPROVAL
A		SEE ENGRG. REV. NOTICE	16 DEC 65	
D		SEE NOR.	11MAY72	
J		SEE NOR.	[illegible]	
AA		SEE ECP NO. 94HE3229	15-01-26	
AC		SEE ECP NO. RAD-B1084	01-01-06	GJU

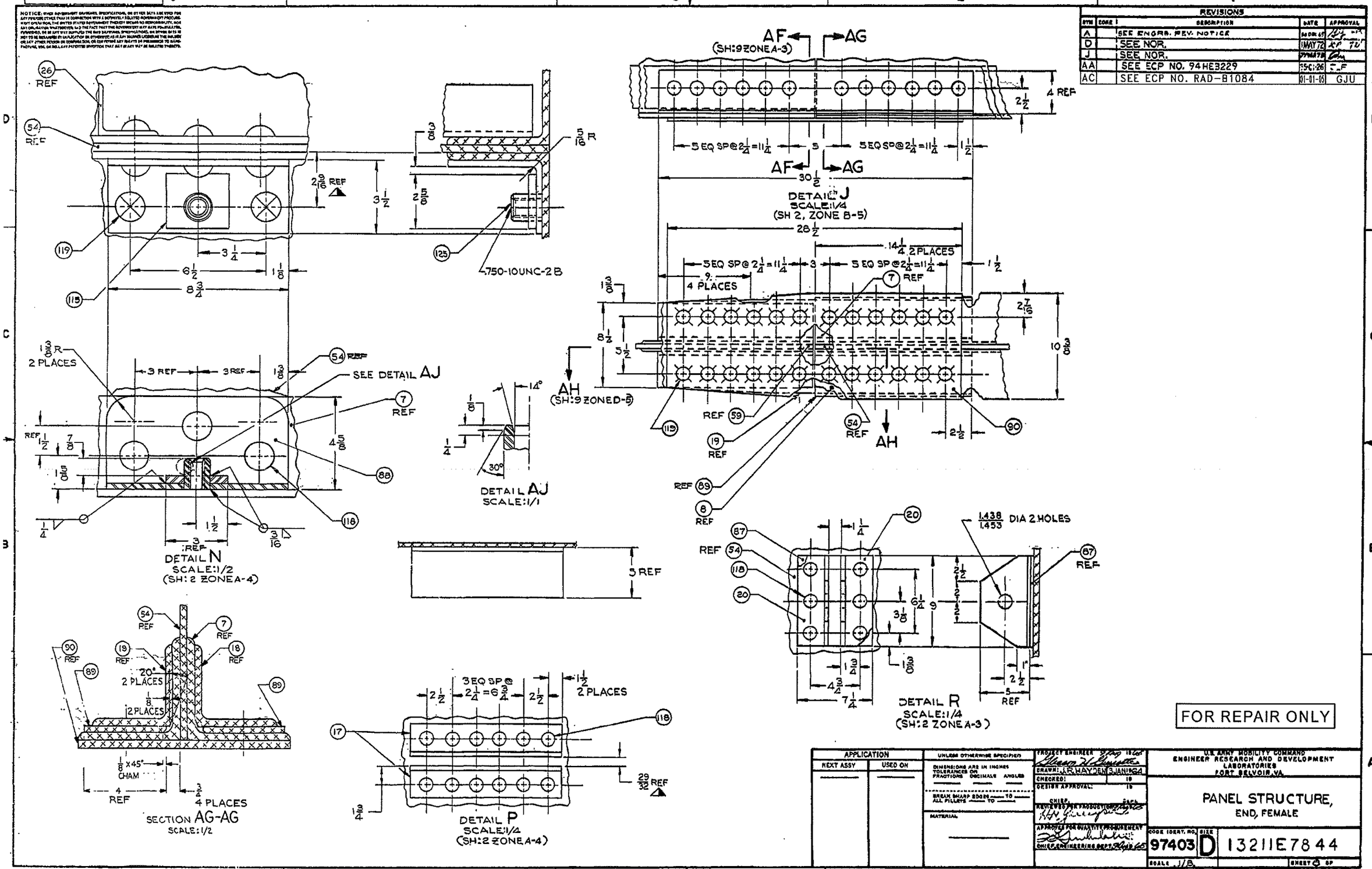

APPLICATION	
NEXT ASSY	USED ON

UNLESS OTHERWISE SPECIFIED
DIMENSIONS ARE IN INCHES
TOLERANCES ON
FRACTIONS DECIMALS ANGLES
BREAK SHARP EDGES TO
ALL FILLETS TO
MATERIAL

PROJECT ENGINEER
DRAWN: J.R. HAY DEM 3 JAN 1964
CHECKED:
DESIGN APPROVAL:
CHIEF
REVIEWED FOR PRODUCIBILITY
APPROVED FOR QUALITY REQUIREMENT
CHIEF, ENGINEERING DEPT.

U.S. ARMY MOBILITY COMMAND
ENGINEER RESEARCH AND DEVELOPMENT LABORATORIES
FORT BELVOIR, VA.

PANEL STRUCTURE,
END, FEMALE

CODE IDENT. NO. 97403 | SIZE D | 13211E7844

SCALE 1/8 | SHEET 3 OF

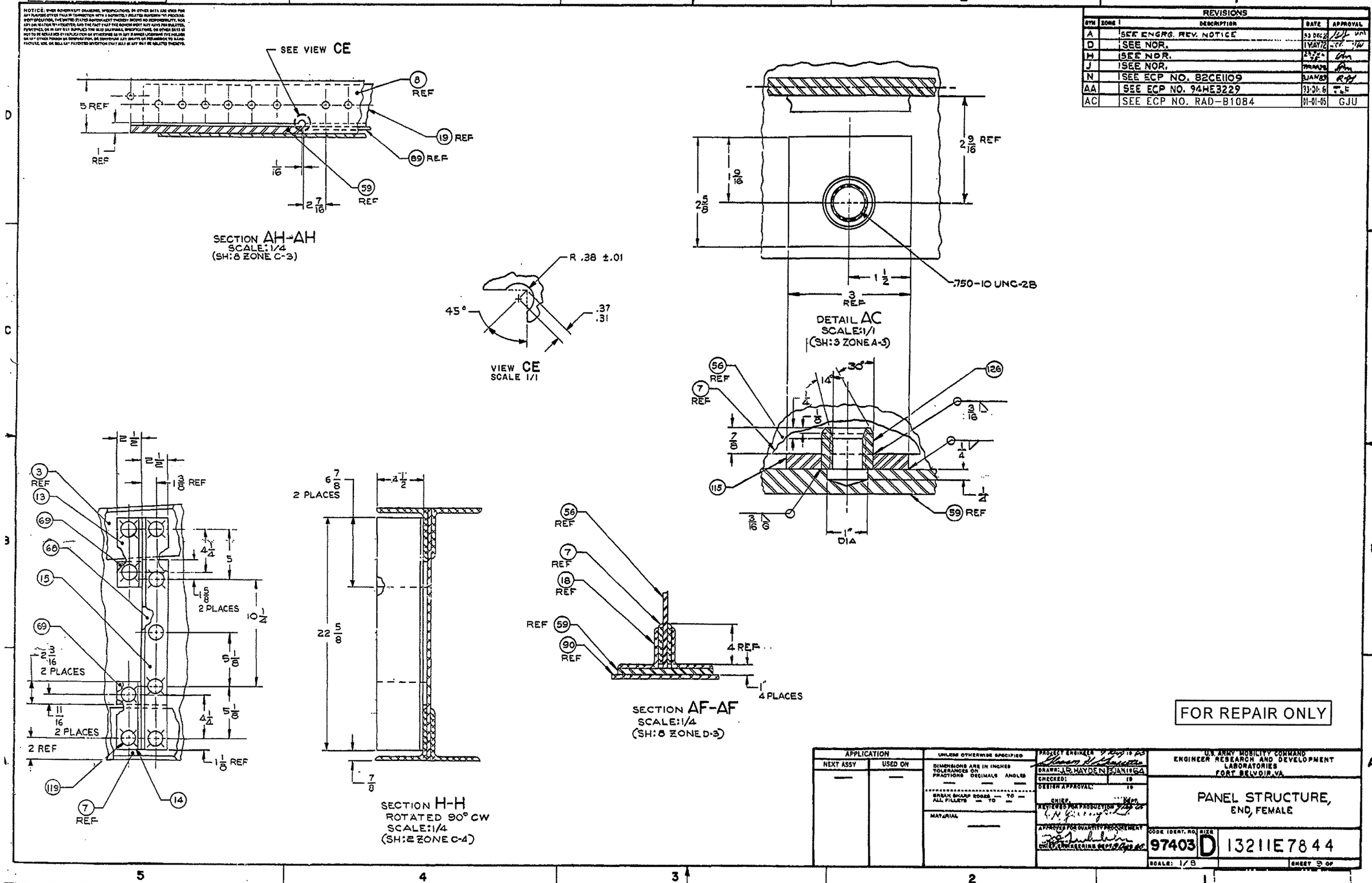

REVISIONS				
SYM	ZONE	DESCRIPTION	DATE	APPROVAL
A		SEE ENGRG. REV. NOTICE	23 DEC 68	
D		SEE NOR.	1 MAY 72	
H		SEE NOR.		
J		SEE NOR.		
N		SEE ECP NO. 82CE1109	3 JAN 83	
AA		SEE ECP NO. 94HE3229	93-01-6	
AC		SEE ECP NO. RAD-B1084	01-01-05	GJU

APPLICATION	
NEXT ASSY	USED ON
—	—

UNLESS OTHERWISE SPECIFIED
DIMENSIONS ARE IN INCHES
TOLERANCES ON
FRACTIONS DECIMALS ANGLES
BREAK SHARP EDGES — TO —
ALL FILLETS — TO —
MATERIAL —

PROJECT ENGINEER
DRAWN: J.R. HAYDEN 3 JAN 1964
CHECKED:
DESIGN APPROVAL:
CHIEF, DEPT.
REVIEWED FOR PRODUCTION
APPROVED FOR QUANTITY PROCUREMENT
CHIEF, ENGINEERING DEPT.

U.S. ARMY MOBILITY COMMAND
ENGINEER RESEARCH AND DEVELOPMENT LABORATORIES
FORT BELVOIR, VA.

PANEL STRUCTURE,
END, FEMALE

CODE IDENT. NO. 97403 | SIZE D | 13211E7844
SCALE: 1/8 | SHEET 9 OF

REVISIONS				
SYM	ZONE	DESCRIPTION	DATE	APPROVAL
A		SEE ENGRG. REV. NOTICE	30 SEP 65	
D		SEE NOR.	1 MAY 72	
AC		SEE ECP NO. RAD-B1084	01-01-85	GJU

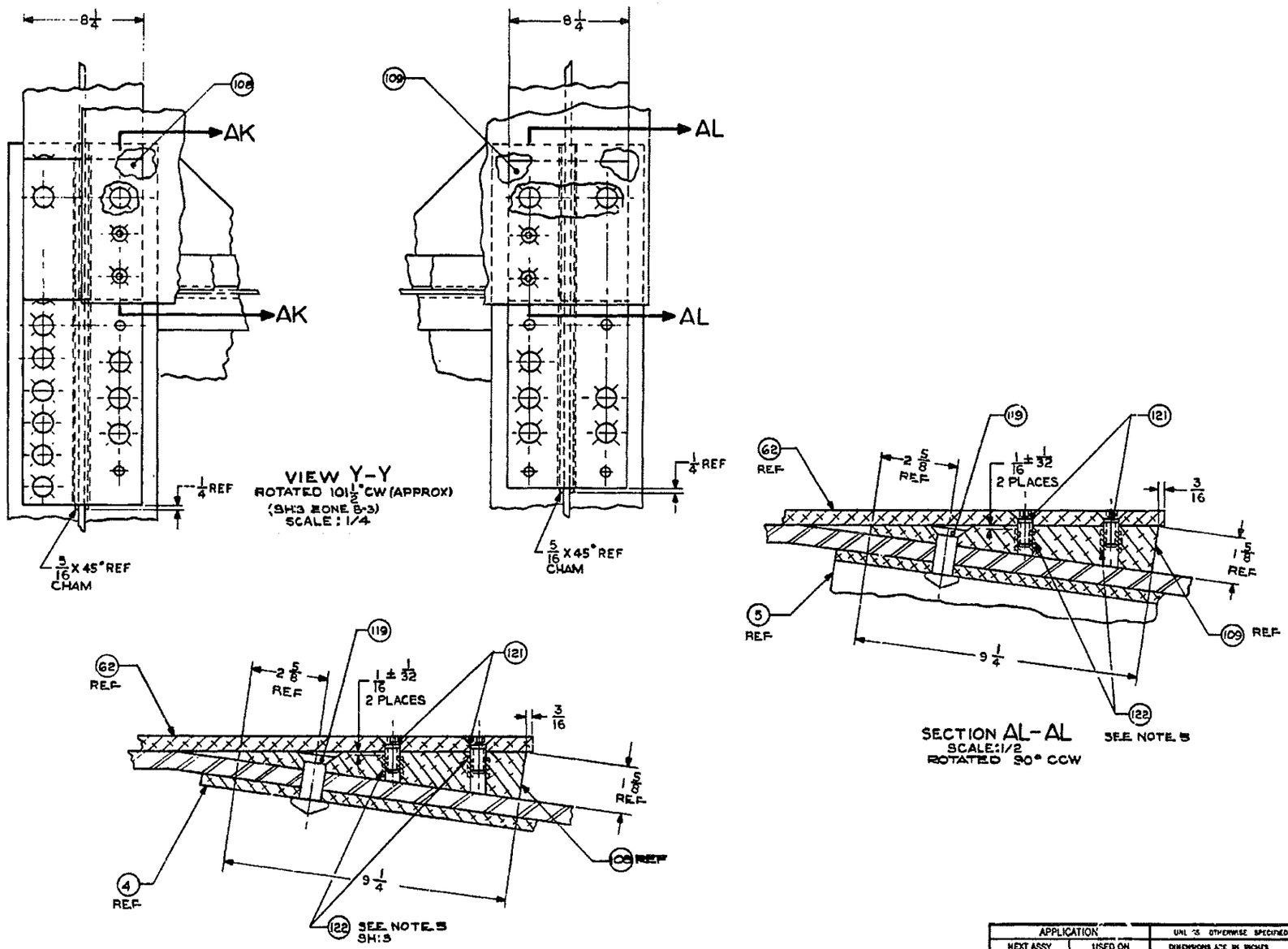

FOR REPAIR ONLY

APPLICATION	
NEXT ASSY	USED ON
—	—

UNL'S OTHERWISE SPECIFIED
DIMENSIONS ARE IN INCHES
TOLERANCES ON
FRACTIONS — DECIMALS — ANGLES —
BREAK SHARP EDGES — TO —
ALL FILLETS — TO —
MATERIAL —

PROJECT ENGINEER 9 Aug 1965
DRAWN: FITCH 9 Aug 1964
CHECKED: 19
DESIGN APPROVAL: 19
CHIEF, DEPT.
REVIEWED FOR PRODUCTION 9 Aug 1965
APPROVED FOR QUALITY PROCUREMENT
CHIEF, ENGINEERING DEPT. 9 Aug 1965

U.S. ARMY MOBILITY COMMAND
ENGINEER RESEARCH AND DEVELOPMENT LABORATORIES
FORT BELVOIR, VA.

PANEL STRUCTURE,
END, FEMALE

COOL ITEM NO. 97403 | SIZE D | 13211E7844

SCALE: 1/2 | SHEET 1 OF

REVISIONS				
SYM	ZONE	DESCRIPTION	DATE	APPROVAL
A		SEE ENGRG. REV NOTICE	30 DEC 69	
D		SEE NOR.	1 MAY 72	
AC		SEE ECP NO. RAD-B1084	81-01-05	GJU

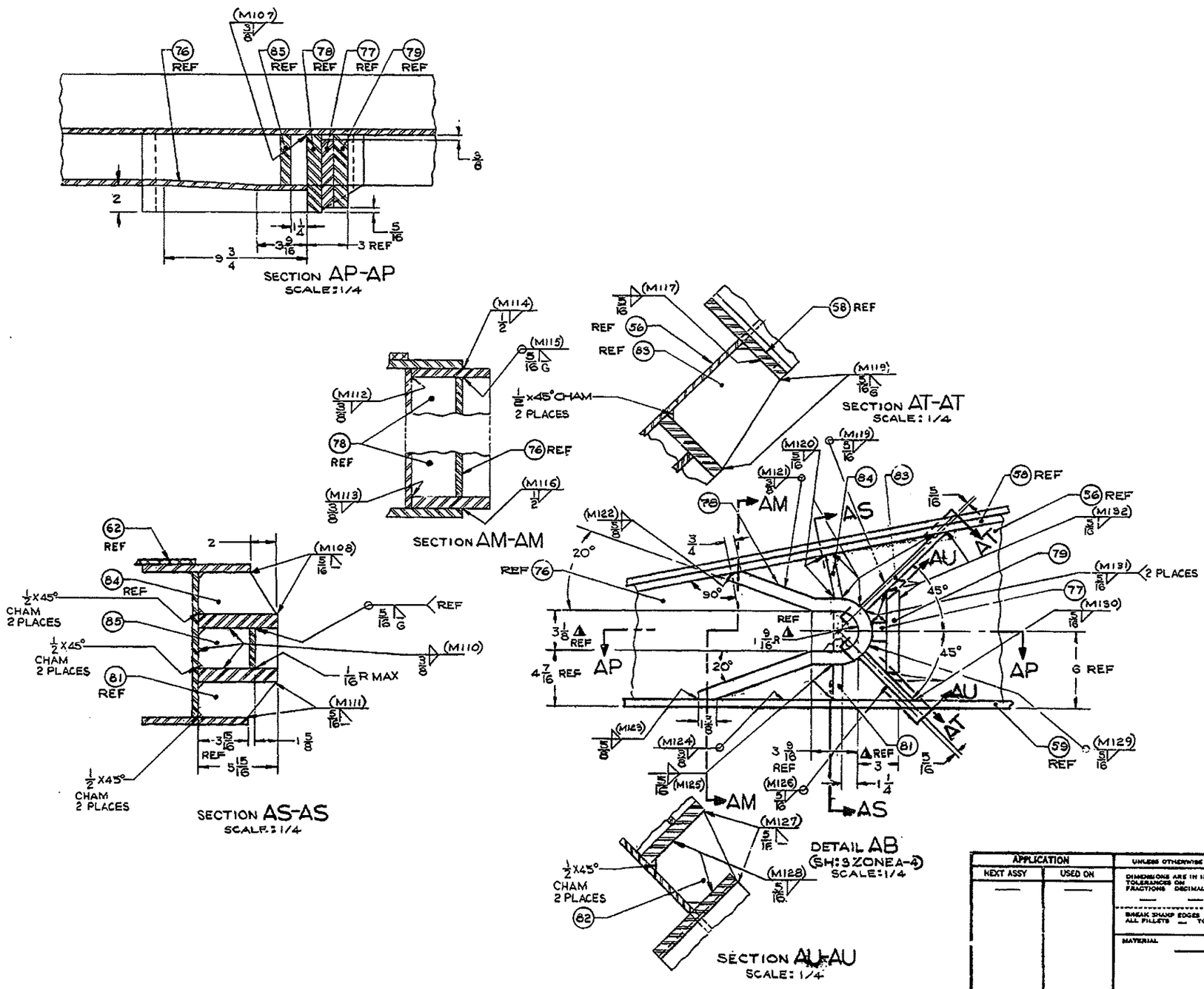

FOR REPAIR ONLY

APPLICATION	
NEXT ASSY	USED ON
—	—

UNLESS OTHERWISE SPECIFIED
DIMENSIONS ARE IN INCHES
TOLERANCES ON FRACTIONS DECIMALS ANGLES
BREAK SHARP EDGES — TO —
ALL FILLETS — TO —
MATERIAL —

PROJECT ENGINEER 19
DRAWN: J.R. HAYDEN 19 OCT 63
CHECKED: 19
DESIGN APPROVAL: 19
CHIEF DEPT.
REVIEWED FOR PRODUCTION 19
APPROVED FOR QUANTITY PROCUREMENT
CHIEF, ENGINEERING DEPT.

U.S. ARMY MOBILITY COMMAND
ENGINEER RESEARCH AND DEVELOPMENT LABORATORIES
FORT BELVOIR, VA.

PANEL STRUCTURE, END, FEMALE

CODE IDENT. NO. 97403 | SIZE D | 13211E7844

SCALE: 1/8 | SHEET 1 OF

NOTICE—THIS DOCUMENT, DRAWINGS, SPECIFICATIONS, OR OTHER DATA ARE SENT FOR ANY PURPOSE OTHER THAN IN CONNECTION WITH A DEFINITELY RELATED GOVERNMENT PROCUREMENT OPERATION, THE UNITED STATES GOVERNMENT THEREBY INCURS NO RESPONSIBILITY NOR ANY OBLIGATION WHATSOEVER; AND THE FACT THAT THE GOVERNMENT MAY HAVE FORMULATED, FURNISHED, OR IN ANY WAY SUPPLIED THE SAID DRAWINGS, SPECIFICATIONS, OR OTHER DATA IS NOT TO BE REGARDED BY IMPLICATION OR OTHERWISE AS IN ANY MANNER LICENSING THE HOLDER OR ANY OTHER PERSON OR CORPORATION, OR CONFERRING ANY RIGHTS OR PERMISSION TO MANUFACTURE, USE, OR SELL ANY PATENTED INVENTION THAT MAY IN ANY WAY BE RELATED THERETO.

REVISIONS

SYM	ZONE	DESCRIPTION	DATE	APPROVAL
A		SEE ENGRG. REV. NOTICE	30 DEC 65	
B		SEE ENGRG REV NOTICE	6 APR 67	JVL
C		SEE NOR.	26AUG68	JVL
D		SEE NOR.	1MAY72	CP
J		SEE NOR.	27MAR78	
AC		SEE ECP NO. RAD-B1084	01-01-85	GJU

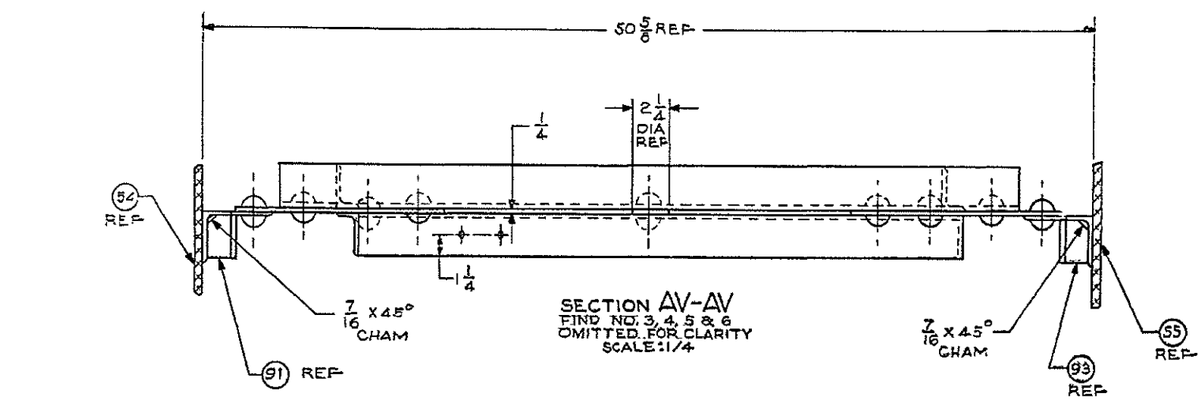

SECTION AV-AV
FIND NO. 3, 4, 5 & 6 OMITTED FOR CLARITY
SCALE: 1/4

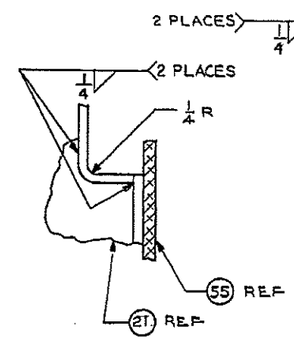

DETAIL AY
SCALE: 1/2

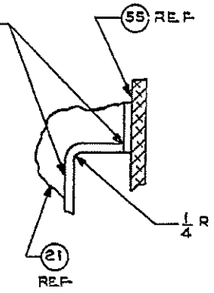

DETAIL AZ
SCALE: 1/2

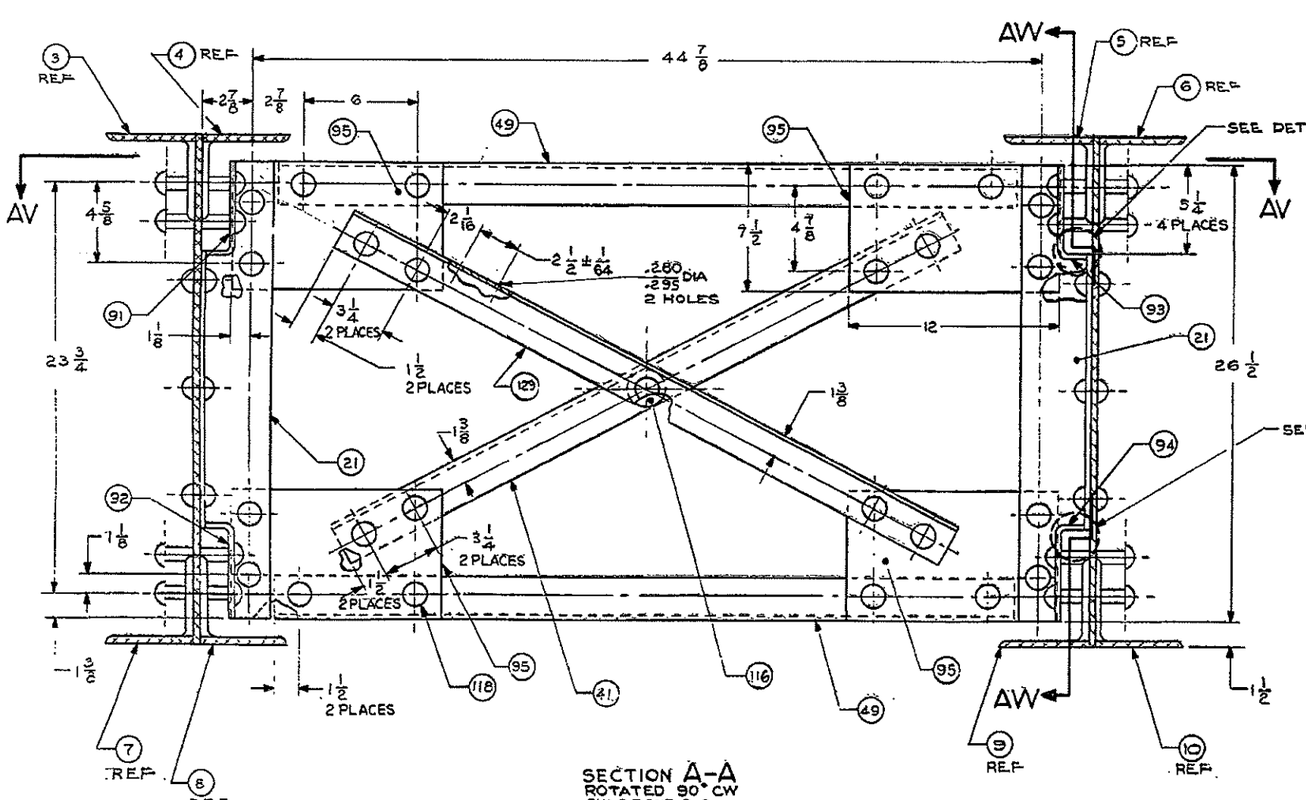

SECTION A-A
ROTATED 90° CW
SH: 2 ZONE C-3
FIND NO. 1, 2, 127 & 128 OMITTED FOR CLARITY
SCALE: 1/4

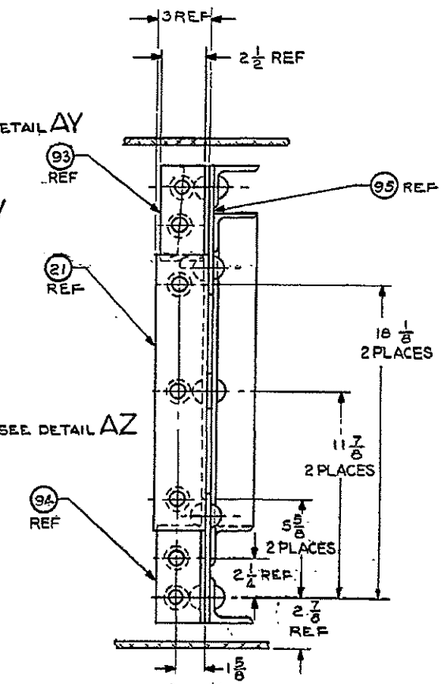

SECTION AW-AW

FOR REPAIR ONLY

APPLICATION	
NEXT ASSY	USED ON
—	—

UNLESS OTHERWISE SPECIFIED
DIMENSIONS ARE IN INCHES
TOLERANCES ON FRACTIONS — DECIMALS — ANGLES —
BREAK SHARP EDGES — TO —
ALL FILLETS — TO —
MATERIAL —

PROJECT ENGINEER 19
DRAWN: FITCH Jan 1967
CHECKED: 19
DESIGN APPROVAL: 19
CHIEF, DEV.
REVIEWED FOR PRODUCTION 19
APPROVED FOR QUANTITY PROCUREMENT
CHIEF, ENGINEERING DEPT. 19

U.S. ARMY MOBILITY COMMAND
ENGINEER RESEARCH AND DEVELOPMENT LABORATORIES
FORT BELVOIR, VA

PANEL STRUCTURE, END, FEMALE

CODE IDENT NO.	SIZE	
97403	D	13211E7844

SCALE: 1/8 SHEET 12 OF

REVISIONS				
SYM	ZONE	DESCRIPTION	DATE	APPROVAL
B		SEE ENGRG REV NOTICE	[illegible]	[illegible]
C		SEE NOR.	[illegible]	[illegible]
D		SEE NOR.	[illegible]	[illegible]
AC		SEE ECP NO. RAD-B1084	01-01-05	GJU

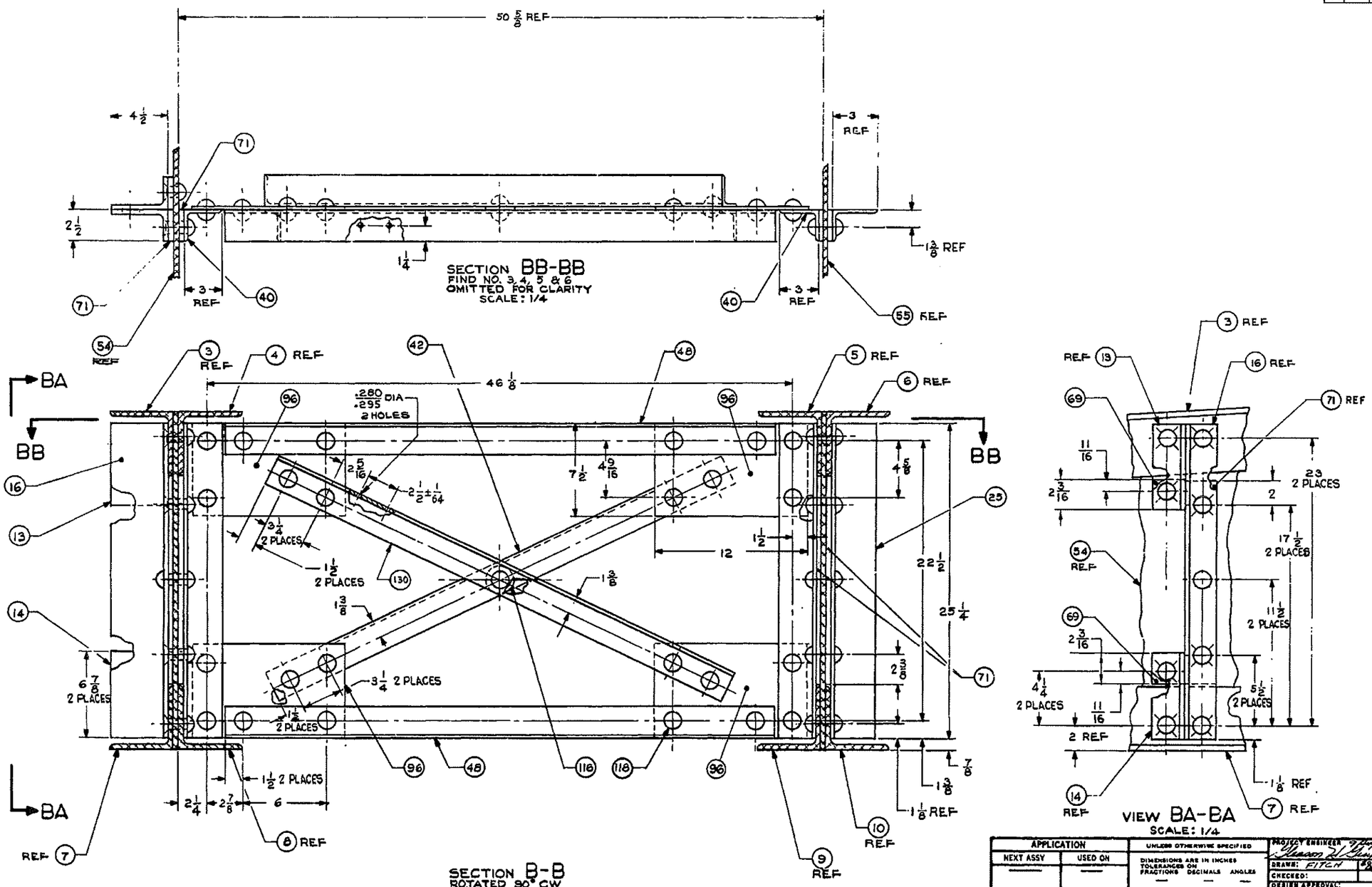

FOR REPAIR ONLY

APPLICATION	
NEXT ASSY	USED ON
—	—

UNLESS OTHERWISE SPECIFIED
DIMENSIONS ARE IN INCHES
TOLERANCES ON
FRACTIONS — DECIMALS — ANGLES —
BREAK SHARP EDGES — TO —
ALL FILLETS — TO —
MATERIAL —

PROJECT ENGINEER [signature] 1963
DRAWN: FITCH 1963
CHECKED: 19
DESIGN APPROVAL: 19
CHIEF, DEPT
REVIEWED FOR PRODUCTION [signature]
APPROVED FOR QUANTITY PROCUREMENT [signature]
CHIEF, ENGINEERING DEPT [signature]

U.S. ARMY MOBILITY COMMAND
ENGINEER RESEARCH AND DEVELOPMENT LABORATORIES
FORT BELVOIR, VA.

PANEL STRUCTURE,
END, FEMALE

CODE IDENT. NO. 97403 | SIZE D | 13211E7844

SCALE: 1/8 | SHEET 13 OF

REVISIONS				
ZONE	LTR	DESCRIPTION	DATE	APPROVED
	B	SEE ENGRG REV NOTICE	5 MAR 67	J.K.
	D	SEE NOR.	MAY 72	
	AC	SEE ECP NO. RAD-B1084	01-01-05	GJU

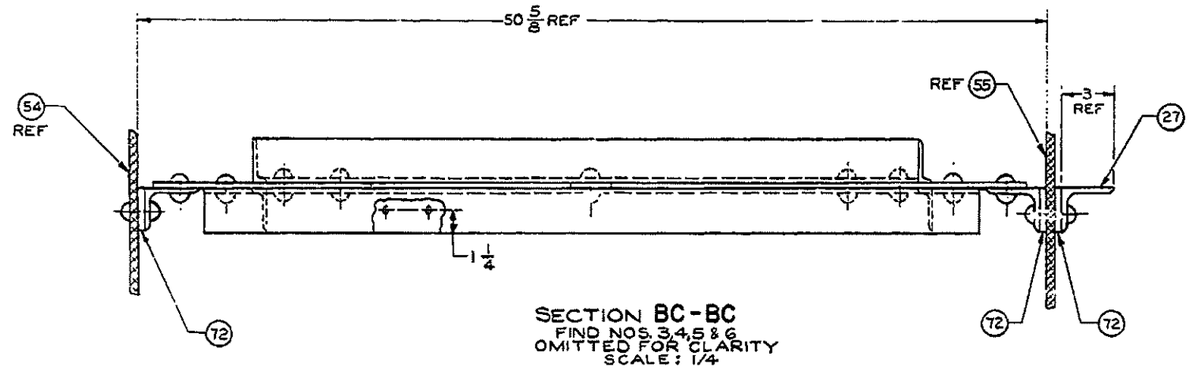

SECTION BC-BC
FIND NOS. 3,4,5 & 6
OMITTED FOR CLARITY
SCALE: 1/4

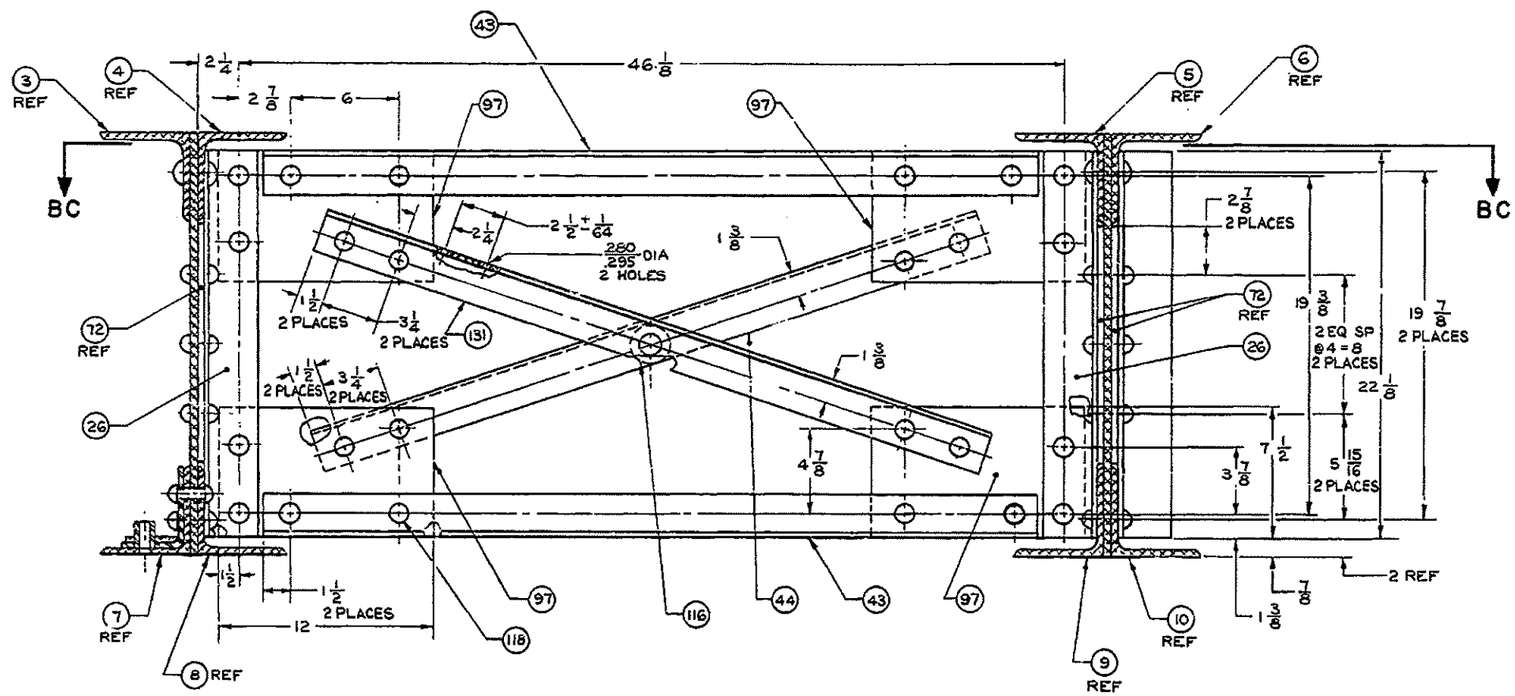

SECTION C-C
ROTATED 90° CW
(SH: 2 ZONE C-5)
SCALE: 1/4

FOR REPAIR ONLY

NEXT ASSY	USED ON	UNLESS OTHERWISE SPECIFIED DIMENSIONS ARE IN INCHES. TOLERANCE: DECIMALS: .XX ± .— .XXX ± .— ANGLES: ± — BREAK SHARP EDGES — TO — ALL FILLETS — TO —	DRAWN KUHNS	DATE 30 JUNE 65
APPLICATION		MATERIAL —	CHECKED	
FOR INTERPRETATION OF DIMENSIONING AND TOLERANCING SEE MIL-STD-8			Gleason H. Guyette PROJECT ENGINEER	
SUPPLEMENTARY QUALITY ASSURANCE PROVISIONS (SQAP) EXIST FOR THIS ITEM - YES ☐ NO ☐			APPROVED CHIEF, ENGINEERING DEPT.	
			DATE 9 Aug 65	

U.S. ARMY MOBILITY COMMAND
MOBILITY EQUIPMENT CENTER
ENGINEER RESEARCH AND DEVELOPMENT LABORATORIES, FORT BELVOIR, VA.

PANEL STRUCTURE, END, FEMALE

SIZE	CODE IDENT NO	
D	97403	13211E7844
SCALE 1/8		SHEET 14

NOTICE—WHEN GOVERNMENT DRAWINGS, SPECIFICATIONS, OR OTHER DATA ARE USED FOR ANY PURPOSE OTHER THAN IN CONNECTION WITH A DEFINITELY RELATED GOVERNMENT PROCUREMENT OPERATION, THE UNITED STATES GOVERNMENT THEREBY INCURS NO RESPONSIBILITY, NOR ANY OBLIGATION WHATSOEVER; AND THE FACT THAT THE GOVERNMENT MAY HAVE FORMULATED, FURNISHED, OR IN ANY WAY SUPPLIED THE SAID DRAWINGS, SPECIFICATIONS, OR OTHER DATA IS NOT TO BE REGARDED BY IMPLICATION OR OTHERWISE AS IN ANY MANNER LICENSING THE HOLDER OR ANY OTHER PERSON OR CORPORATION, OR CONVEYING ANY RIGHTS OR PERMISSION TO MANUFACTURE, USE, OR SELL ANY PATENTED INVENTION THAT MAY IN ANY WAY BE RELATED THERETO.

REVISIONS				
SYM	ZONE	DESCRIPTION	DATE	APPROVAL
A		SEE ENGRG REV NOT CH	10 DEC 65	[illegible]
C		SEE NOR.	26 AUG 68	[illegible]
D		SEE NOR.	1 MAY 72	[illegible]
J		SEE NOR.	[illegible]	[illegible]
N		SEE ECP NO. 82CE1109	5 JAN 83	[illegible]
V		SEE ECP NO. 88CE3444	[illegible]	[illegible]
AA		SEE ECP NO. 94HE3229	15 OCT 96	[illegible]
AC		SEE ECP NO. RAD-B1084	01-01-05	GJU

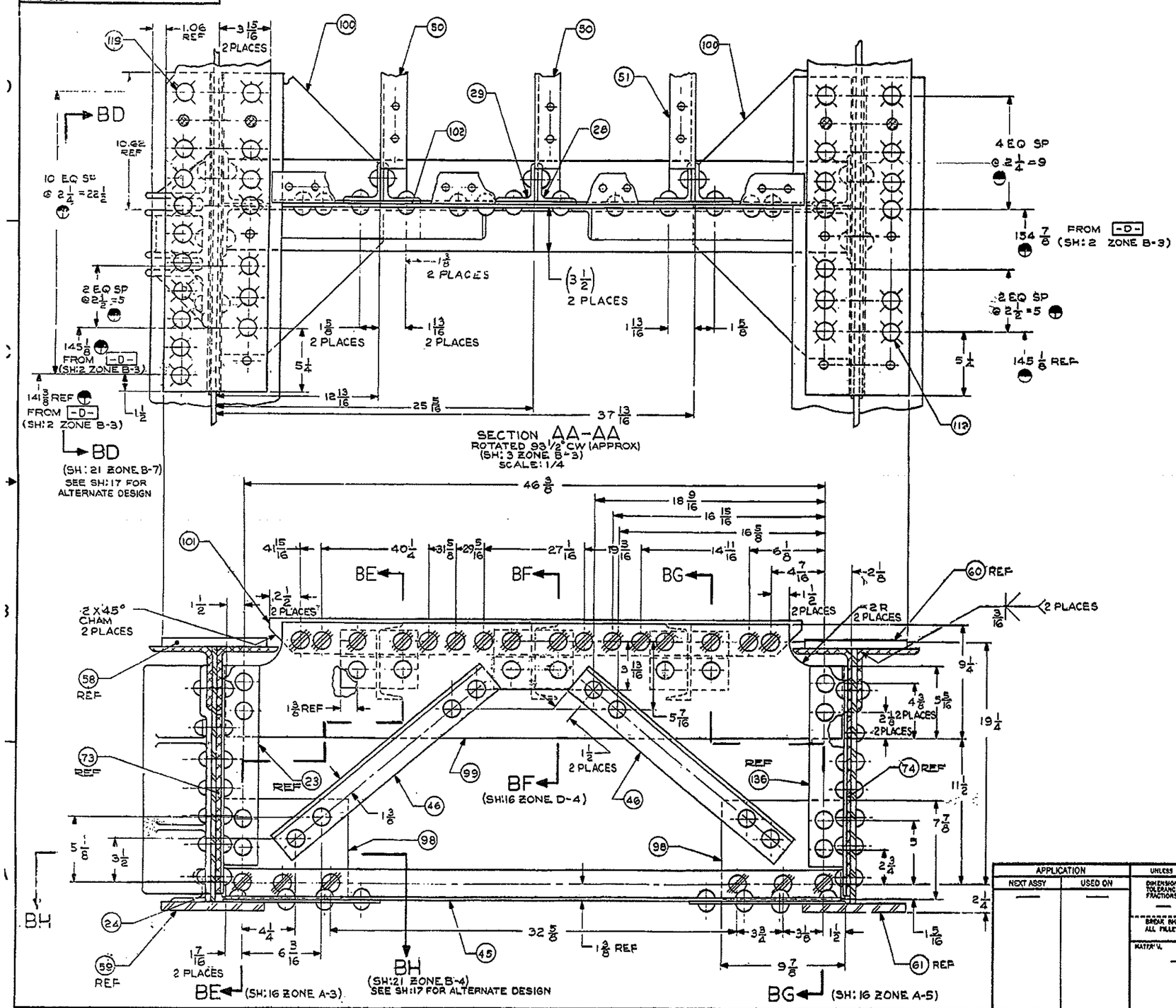

APPLICATION	
NEXT ASSY	USED ON
—	—

UNLESS OTHERWISE SPECIFIED
DIMENSIONS ARE IN INCHES
TOLERANCES ON
FRACTIONS — DECIMALS — ANGLES
BREAK SHARP EDGES — TO —
ALL FILLETS — TO —
MATER'L —

PROJECT ENGINEER [illegible] 19 65
DRAWN FITCH 19 64
CHECKED 19
DESIGN APPROVAL 19
CHIEF DEPT.
REVIEWED FOR PRODUCTION [illegible] 19 65
APPROVED FOR QUANTITY PROCUREMENT [illegible]
CHIEF, OPERATIONS DIV. [illegible] 19 65

U.S. ARMY MOBILITY COMMAND
ENGINEER RESEARCH AND DEVELOPMENT LABORATORIES
FORT BELVOIR, VA.

PANEL STRUCTURE, END, FEMALE

CODE IDENT NO. 97403 | SIZE D | 13211E7844

SCALE 1/8 | SHEET 15 OF

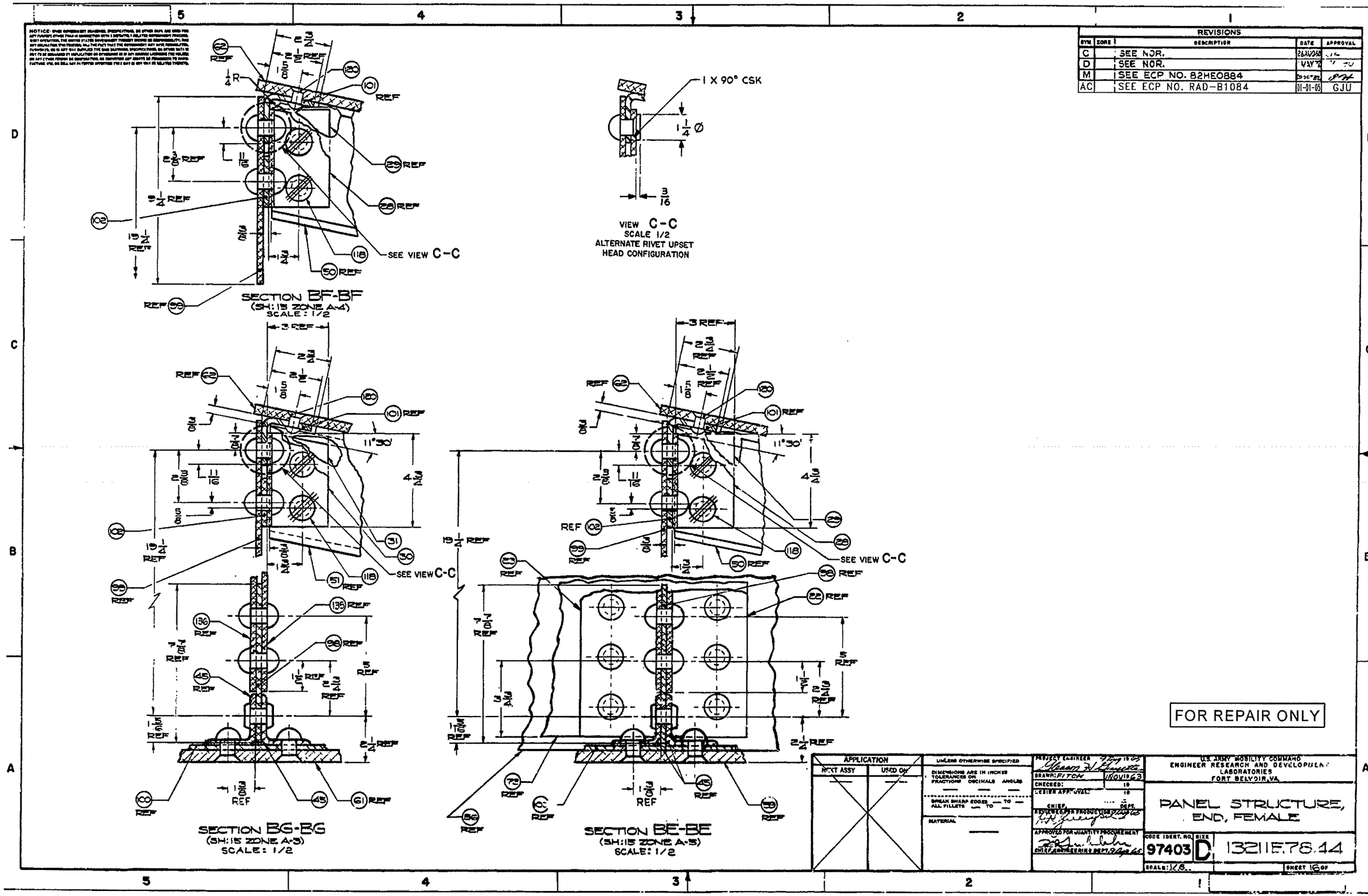

REVISIONS
SYM | ZONE | DESCRIPTION | DATE | APPROVAL
C | SEE NOR. | 26AUG68
D | SEE NOR. | MAY72
M | SEE ECP NO. 82HE0884
AC | SEE ECP NO. RAD-B1084 | 01-01-05 | GJU
SECTION BF-BF
(SH:15 ZONE A-4)
SCALE: 1/2
SEE VIEW C-C
VIEW C-C
SCALE 1/2
ALTERNATE RIVET UPSET
HEAD CONFIGURATION
1 X 90° CSK
SECTION BG-BG
(SH:15 ZONE A-3)
SCALE: 1/2
SECTION BE-BE
(SH:15 ZONE A-5)
SCALE: 1/2
FOR REPAIR ONLY
APPLICATION
NEXT ASSY
USED ON
UNLESS OTHERWISE SPECIFIED
DIMENSIONS ARE IN INCHES
TOLERANCES ON
FRACTIONS DECIMALS ANGLES
BREAK SHARP EDGES — TO —
ALL FILLETS — TO —
MATERIAL
PROJECT ENGINEER
DRAWN: FITCH 1 NOV 63
CHECKED:
DESIGN APPROVAL:
CHIEF, DEPT.
REVIEWED FOR PRODUCTION
APPROVED FOR QUANTITY PROCUREMENT
CHIEF, ENGINEERING DEPT.
U.S. ARMY MOBILITY COMMAND
ENGINEER RESEARCH AND DEVELOPMENT
LABORATORIES
FORT BELVOIR, VA.
PANEL STRUCTURE,
END, FEMALE
CODE IDENT. NO. 97403
SIZE D
13211E78.44
SCALE: 1/8
SHEET 16 OF

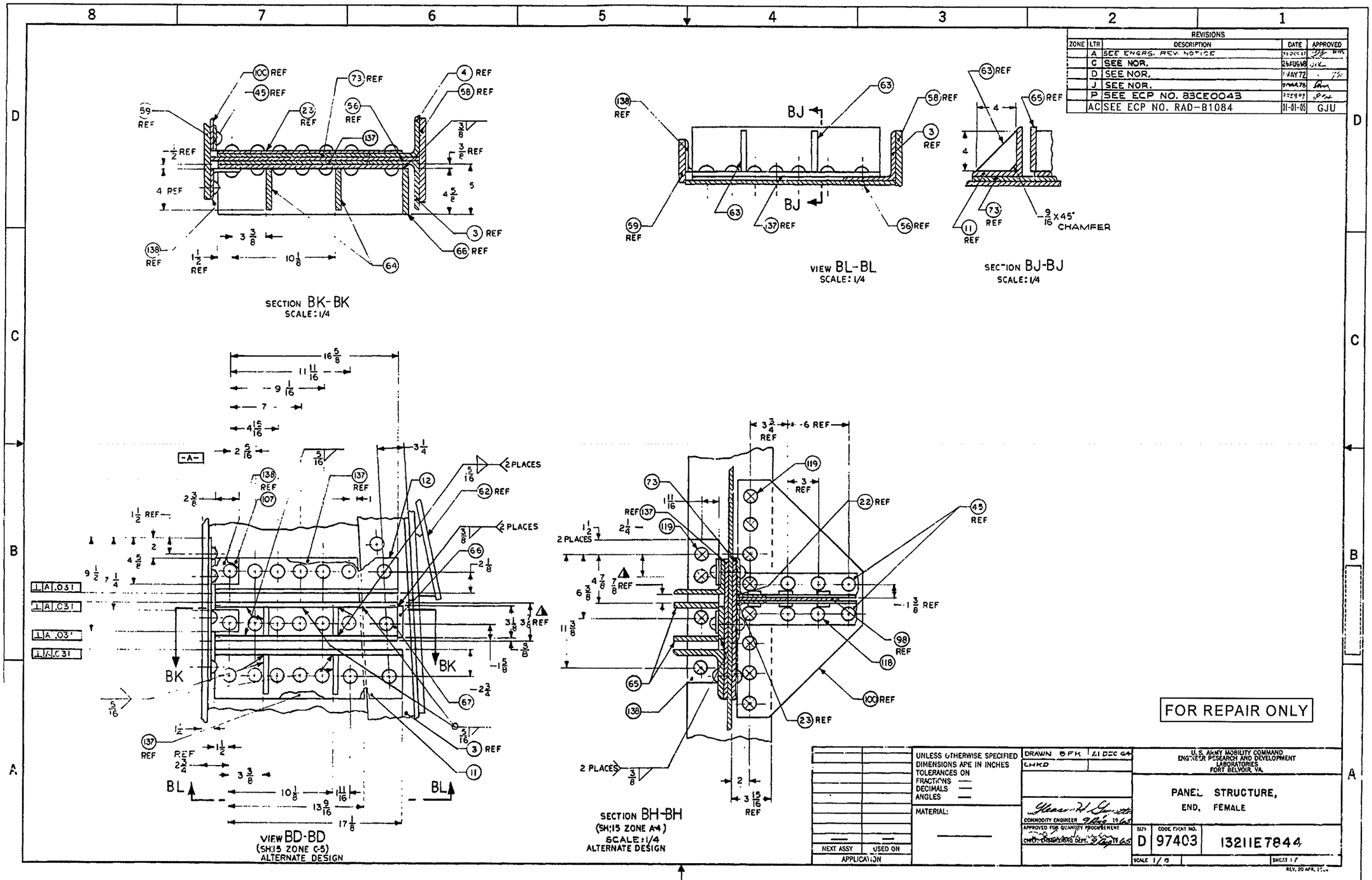

REVISIONS
ZONE | LTR | DESCRIPTION | DATE | APPROVED
A | SEE ENGRG. REV. NOTICE
C | SEE NOR. | 25AUG68
D | SEE NOR. | 1 MAY 72
J | SEE NOR.
P | SEE ECP NO. 83CE0043
AC | SEE ECP NO. RAD-B1084 | 01-01-05 | GJU
SECTION BK-BK
SCALE: 1/4
VIEW BL-BL
SCALE: 1/4
SECTION BJ-BJ
SCALE: 1/4
VIEW BD-BD
(SH:15 ZONE C-5)
ALTERNATE DESIGN
SECTION BH-BH
(SH:15 ZONE A-4)
SCALE: 1/4
ALTERNATE DESIGN
FOR REPAIR ONLY
UNLESS OTHERWISE SPECIFIED DIMENSIONS ARE IN INCHES
TOLERANCES ON
FRACTIONS
DECIMALS
ANGLES
MATERIAL:
NEXT ASSY
USED ON
APPLICATION
DRAWN BFK 21 DEC 64
CHKD
COMMODITY ENGINEER
APPROVED FOR QUANTITY PROCUREMENT
CHIEF, ENGINEERING DEPT.
U.S. ARMY MOBILITY COMMAND
ENGINEER RESEARCH AND DEVELOPMENT LABORATORIES
FORT BELVOIR, VA.
PANEL STRUCTURE,
END, FEMALE
SIZE D
CODE IDENT NO. 97403
13211E7844
SCALE 1/8
SHEET 1 / 7
REV. 20 APR. 1964

NOTICE: THIS DOCUMENT, DRAWINGS, SPECIFICATIONS, OR OTHER DATA ARE USED FOR ANY PURPOSE OTHER THAN IN CONNECTION WITH A DEFINITELY RELATED GOVERNMENT PROCUREMENT OPERATION, THE UNITED STATES GOVERNMENT THEREBY INCURS NO RESPONSIBILITY NOR ANY OBLIGATION WHATSOEVER; AND THE FACT THAT THE GOVERNMENT MAY HAVE FORMULATED, FURNISHED, OR IN ANY WAY SUPPLIED THE SAID DRAWINGS, SPECIFICATIONS, OR OTHER DATA IS NOT TO BE REGARDED BY IMPLICATION, OR OTHERWISE AS IN ANY MANNER LICENSING THE HOLDER OR ANY OTHER PERSON OR CORPORATION, OR CONVEYING ANY RIGHTS OR PERMISSION TO MANUFACTURE, USE, OR SELL ANY PATENTED INVENTION THAT MAY IN ANY WAY BE RELATED THERETO.

REVISIONS				
SYM	ZONE	DESCRIPTION	DATE	APPROVAL
A		SEE ENGRG REV. NOTICE	[illegible]	[illegible]
D		SEE NOR.	MAY [illegible]	[illegible]
G		SEE NOR.	[illegible]	[illegible]
J		SEE NOR.	[illegible]	[illegible]
M		SEE ECP NO. 82HE0884	[illegible]	[illegible]
AC		SEE ECP NO. RAD-B1084	01-01-05	GJU

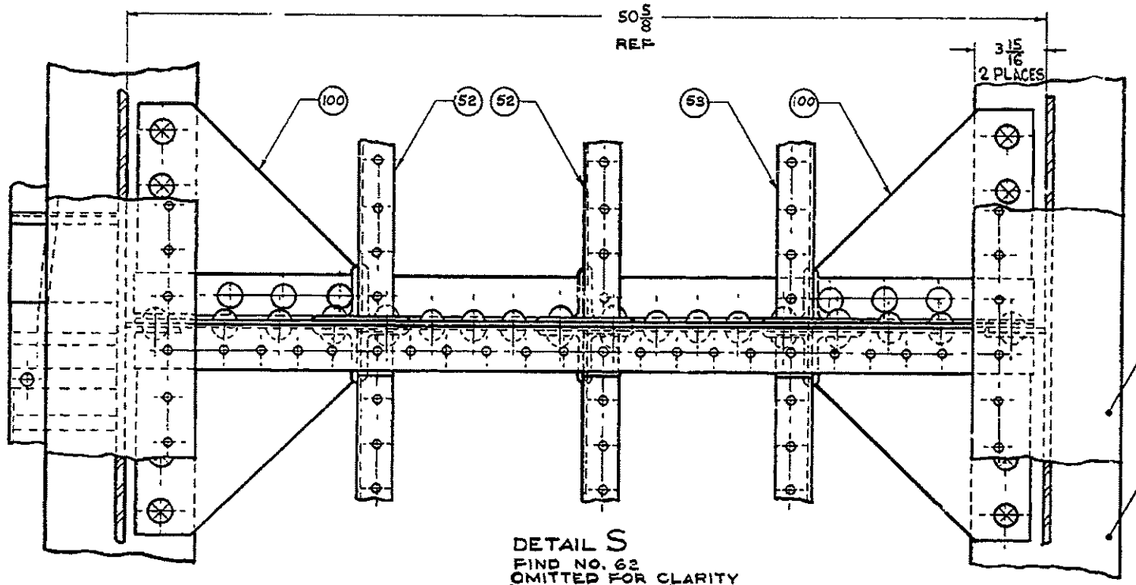

DETAIL S
FIND NO. 62
OMITTED FOR CLARITY
(SH: 3 ZONE D-4)
ROTATED 90° CW
SCALE: 1/4

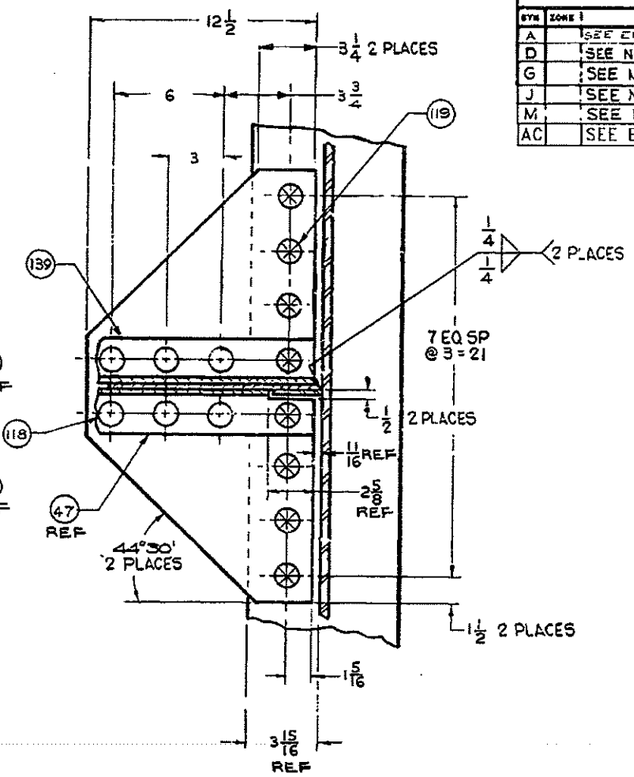

SECTION BR-BR
SCALE: 1/4

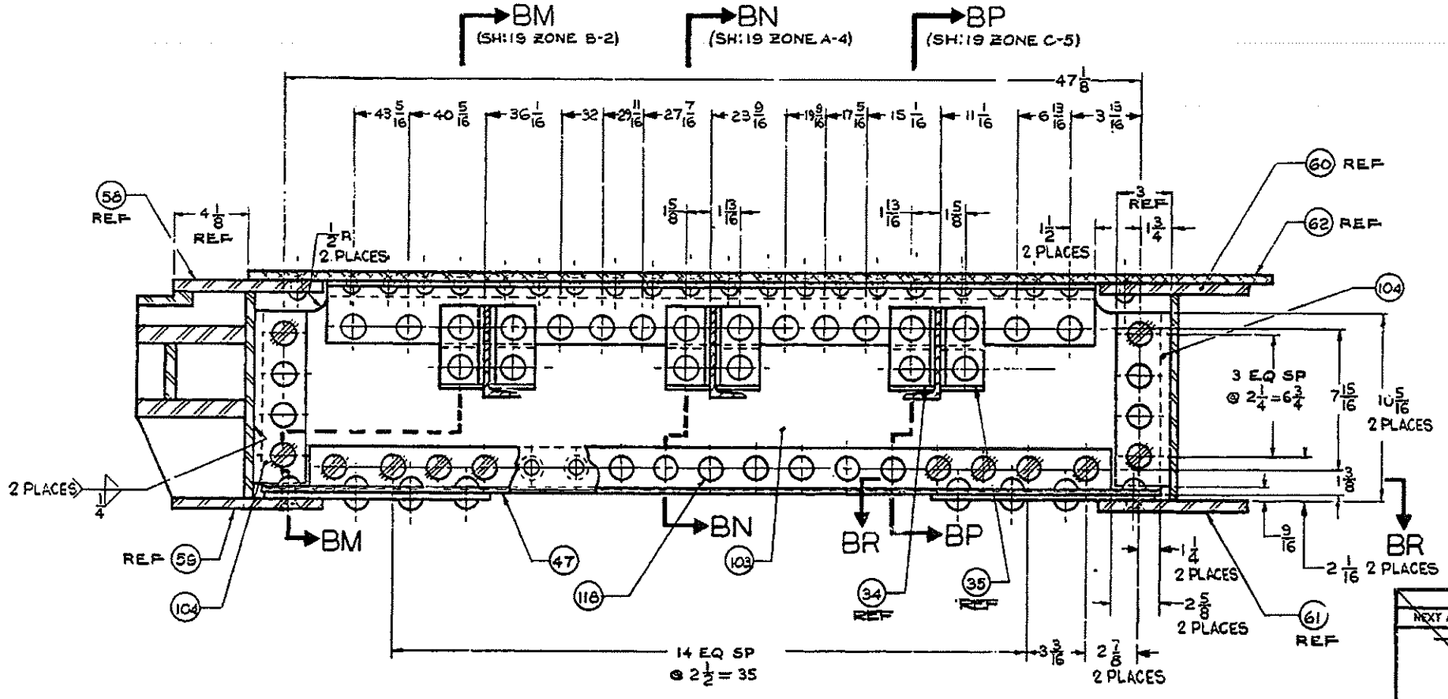

FOR REPAIR ONLY

APPLICATION	
NEXT ASSY	USED ON
—	—

UNLESS OTHERWISE SPECIFIED
DIMENSIONS ARE IN INCHES
TOLERANCES ON FRACTIONS — DECIMALS — ANGLES —
BREAK SHARP EDGES — TO —
ALL FILLETS — TO —
MATERIAL —

PROJECT ENGINEER [illegible] 19 65
DRAWN: [illegible] [illegible] 19 65
CHECKED: 19
DESIGN APPROVAL: 19
CHIEF DATE
REVIEWED FOR PRODUCTION [illegible]
APPROVED FOR QUALITY PROCUREMENT
CHIEF, ENGINEERING DEPT [illegible]

U.S. ARMY MOBILITY COMMAND
ENGINEER RESEARCH AND DEVELOPMENT LABORATORIES
FORT BELVOIR, VA.

PANEL STRUCTURE, END, FEMALE

CODE IDENT. NO. 97403 | SIZE D | 13211E 7844

SCALE: 1/8 | SHEET 18 OF

REVISIONS				
SYM	ZONE	DESCRIPTION	DATE	APPROVAL
A		SEE ENGRG REV. NOTICE	13 DEC 65	
D		SEE NOR.	1 MAY 72	
J		SEE NOR.	7 MAR 72	
M		SEE ECP NO. 82HE0884	20 OCT 82	
AC		SEE ECP NO. RAD-B1084	01-01-05	GJU

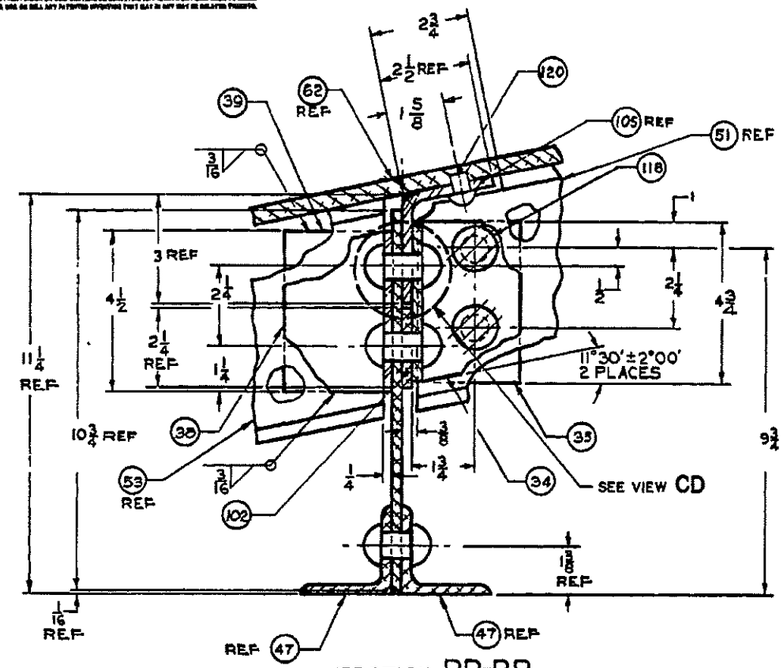

SECTION BP-BP
(SH:18 ZONE B-3)
SCALE: 1/2

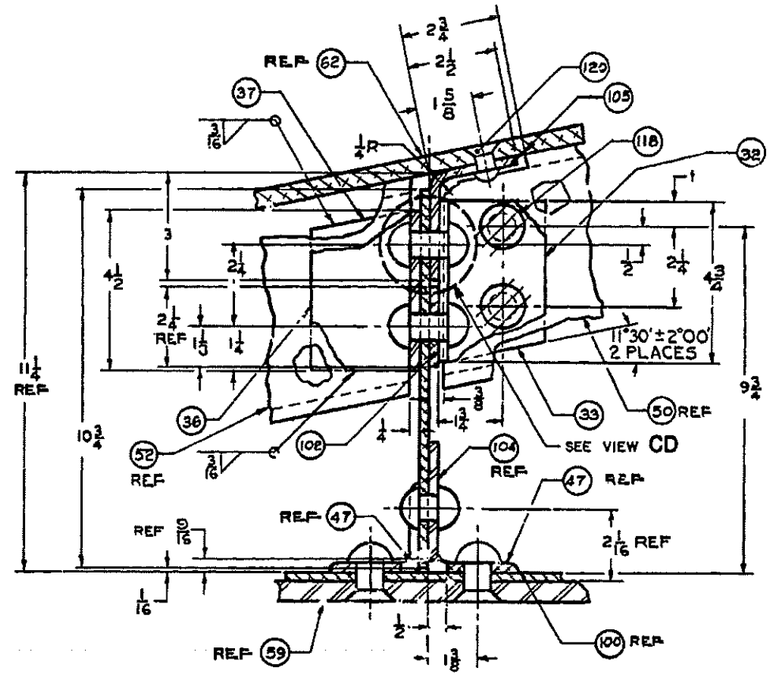

SECTION BM-BM
(SH:18 ZONE B-5)
SCALE: 1/2

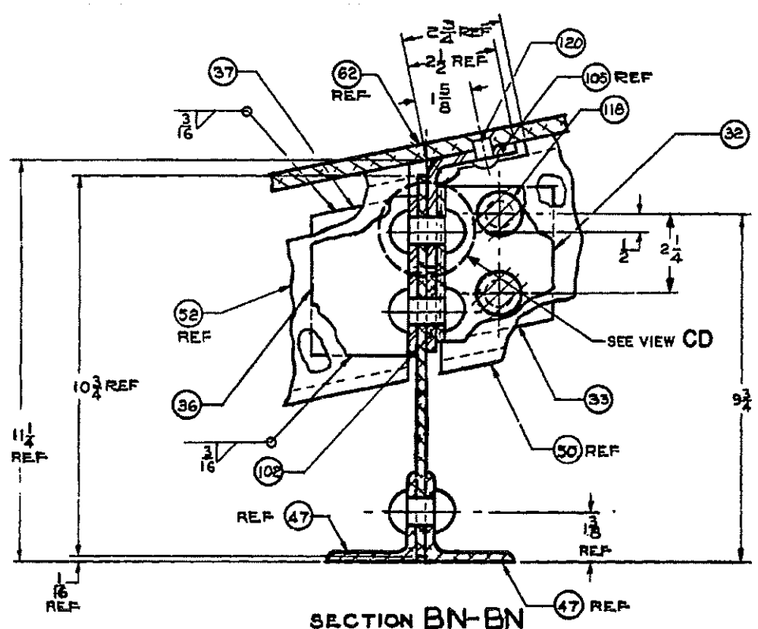

SECTION BN-BN
(SH:18 ZONE B-4)
SCALE: 1/2

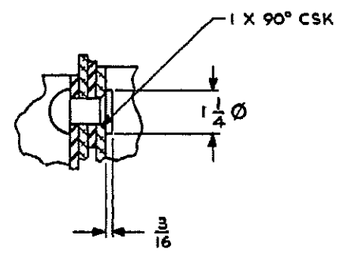

VIEW CD
SCALE 1/2
ALTERNATE RIVET UPSET
HEAD CONFIGURATION

FOR REPAIR ONLY

APPLICATION	
NEXT ASSY	USED ON

UNLESS OTHERWISE SPECIFIED
DIMENSIONS ARE IN INCHES
TOLERANCES ON
FRACTIONS DECIMALS ANGLES
BREAK SHARP EDGES — TO —
ALL FILLETS — TO —
MATERIAL

PROJECT ENGINEER 9 Aug 1965
DRAWN: FITCH 12 Aug 1965
CHECKED: 19
DESIGN APPROVAL: 19
CHIEF DEPT.
REVIEWED FOR PRODUCTION
APPROVED FOR QUANTITY PROCUREMENT
CHIEF ENGINEERING DEPT. 9 Aug 65

U.S. ARMY MOBILITY COMMAND
ENGINEER RESEARCH AND DEVELOPMENT
LABORATORIES
FORT BELVOIR, VA.

PANEL STRUCTURE,
END, FEMALE

CODE IDENT. NO. 97403 | SIZE D | 13211E7844

SCALE: 1/8 | SHEET 19 OF

NOTICE—WHEN GOVERNMENT DRAWINGS, SPECIFICATIONS, OR OTHER DATA ARE USED FOR ANY PURPOSE OTHER THAN IN CONNECTION WITH A DEFINITELY RELATED GOVERNMENT PROCUREMENT OPERATION, THE UNITED STATES GOVERNMENT THEREBY INCURS NO RESPONSIBILITY, NOR ANY OBLIGATION WHATSOEVER; AND THE FACT THAT THE GOVERNMENT MAY HAVE FORMULATED, FURNISHED, OR IN ANY WAY SUPPLIED THE SAID DRAWINGS, SPECIFICATIONS, OR OTHER DATA IS NOT TO BE REGARDED BY IMPLICATION OR OTHERWISE AS IN ANY MANNER LICENSING THE HOLDER OR ANY OTHER PERSON OR CORPORATION, OR CONVEYING ANY RIGHTS OR PERMISSION TO MANUFACTURE, USE, OR SELL ANY PATENTED INVENTION THAT MAY IN ANY WAY BE RELATED THERETO.

REVISIONS				
SYM	ZONE	DESCRIPTION	DATE	APPROVAL
A		SEE ENGRG. REV. NOTICE	30 DEC 65	
C		SEE NOR.	26 AUG 68	
D		SEE NOR.	11 MAY 72	
J		SEE NOR.	7 MAR 78	
AC		SEE ECP NO. RAD-B1084	01-01-05	GJU

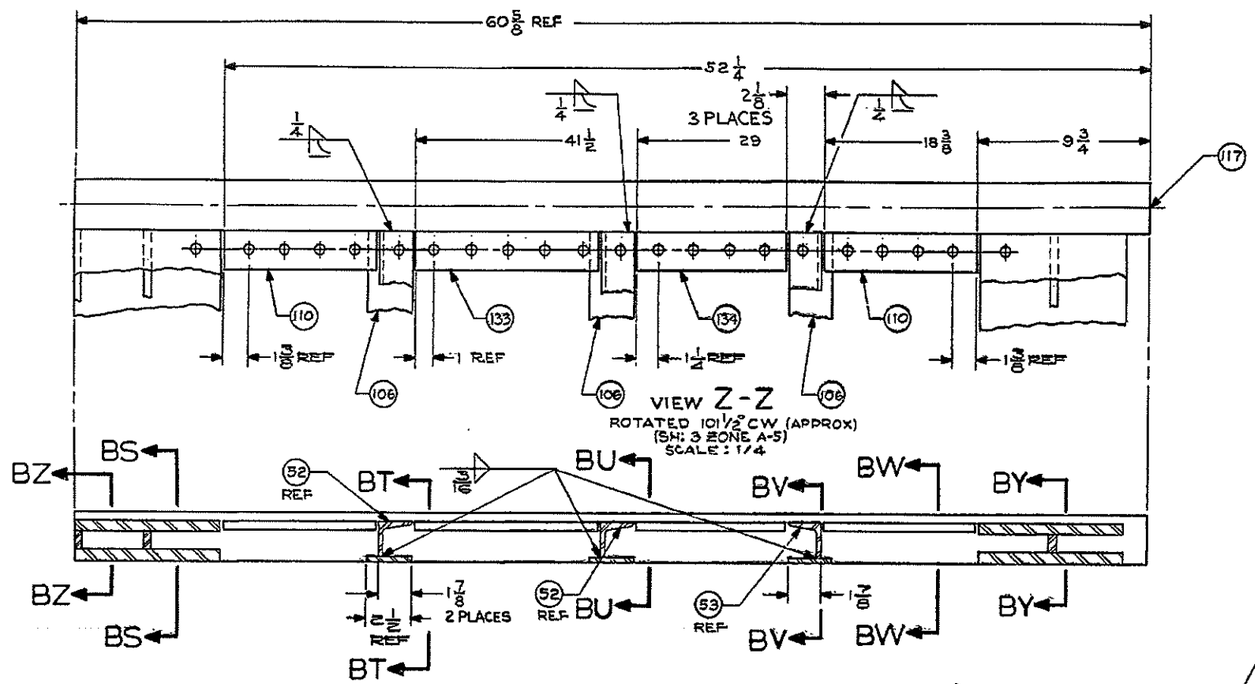

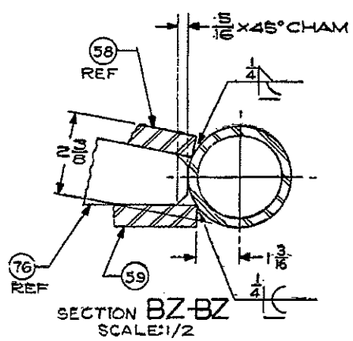

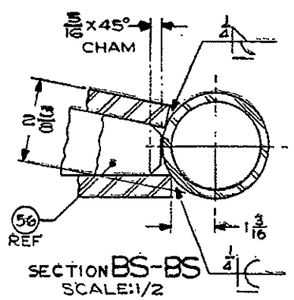

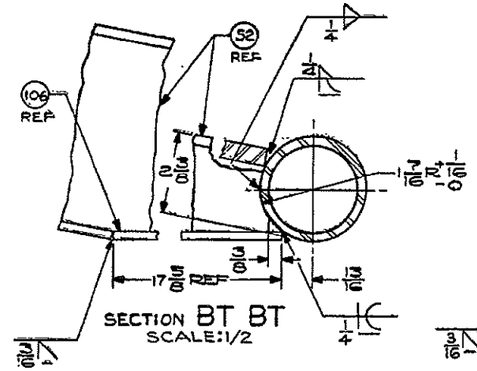

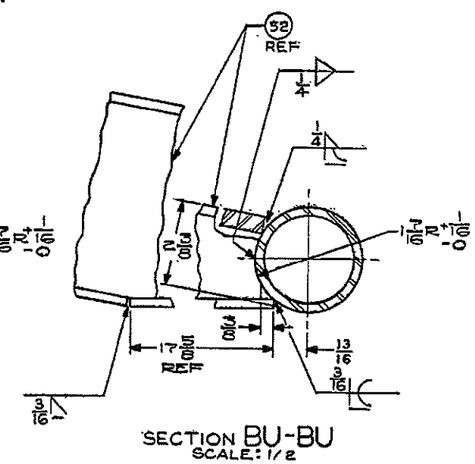

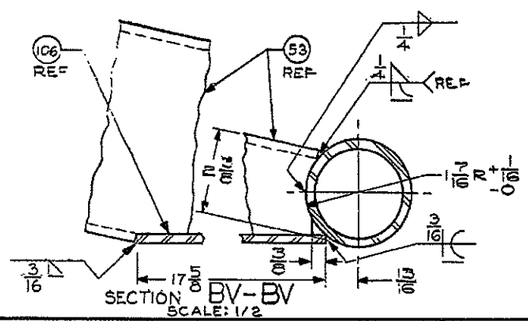

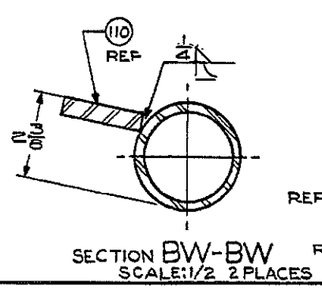

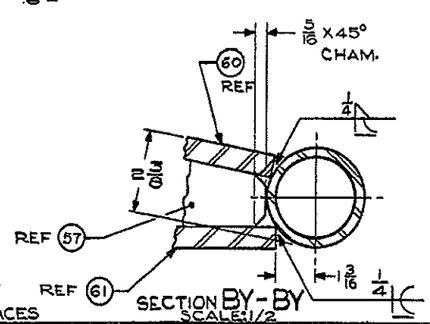

FOR REPAIR ONLY

APPLICATION	
NEXT ASSY	USED ON
—	—

UNLESS OTHERWISE SPECIFIED
DIMENSIONS ARE IN INCHES
TOLERANCES ON FRACTIONS — DECIMALS — ANGLES —
BREAK SHARP EDGES — TO —
ALL FILLETS — TO —
MATERIAL —

PROJECT ENGINEER 19
DRAWN: FITCH 19 64
CHECKED: 19
DESIGN APPROVAL: 19
CHIEF, DEPT.
REVIEW FOR PRODUCTION 19
APPROVED FOR QUANTITY PROCUREMENT
CHIEF, ENGINEERING DEPT. 19

U.S. ARMY MOBILITY COMMAND
ENGINEER RESEARCH AND DEVELOPMENT LABORATORIES
FORT BELVOIR, VA.

PANEL STRUCTURE, END, FEMALE

CODE IDENT NO. 97403 | SIZE D | 13211E7844

SCALE 1/8 | SHEET 20 OF

REVISIONS				
ZONE	LTR	DESCRIPTION	DATE	APPROVED
	A	SEE ENGRG. REV. NOTICE	30 DEC 67	
	C	SEE NOR.	26 AUG 68	
	D	SEE NOR.	1 MAY 72	JCP
	J	SEE NOR.	[illegible]	
	AC	SEE ECP NO. RAD-B1084	01-01-03	GJU

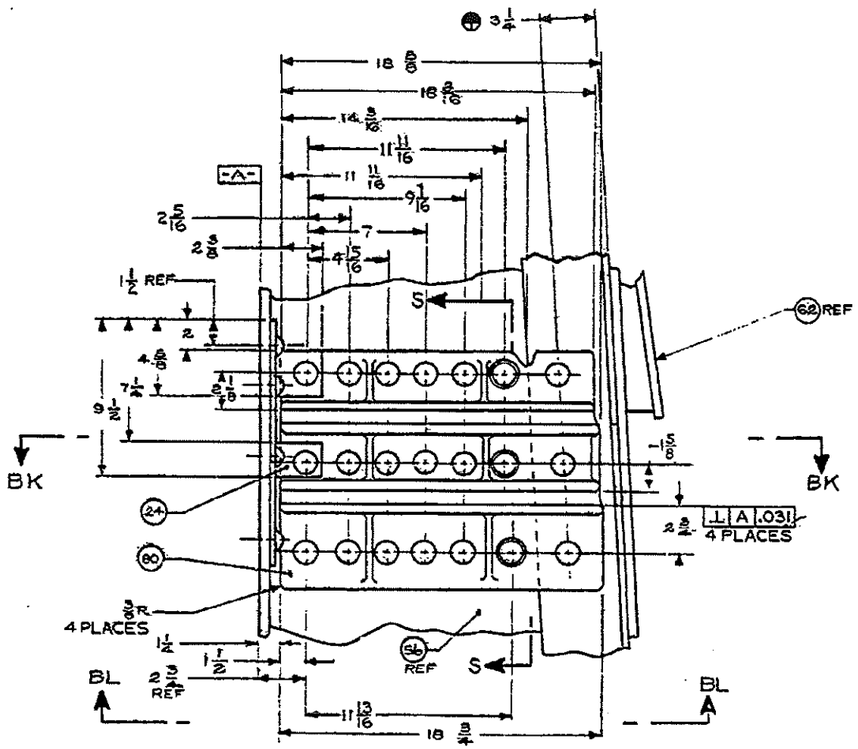

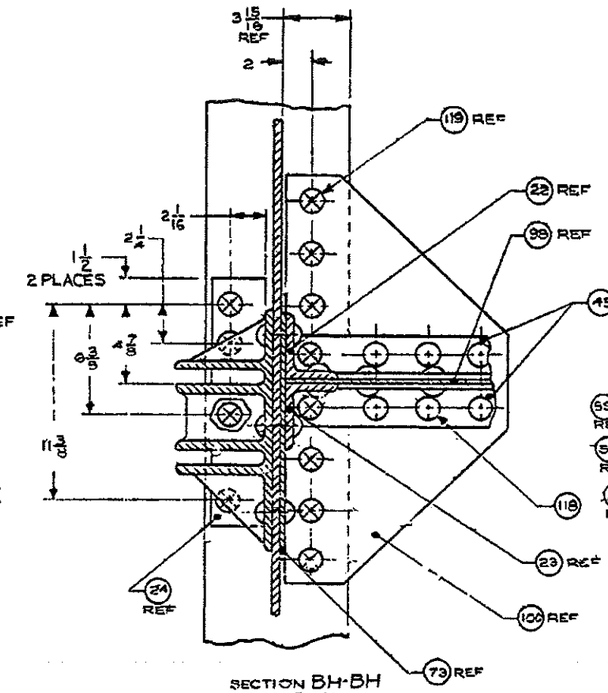

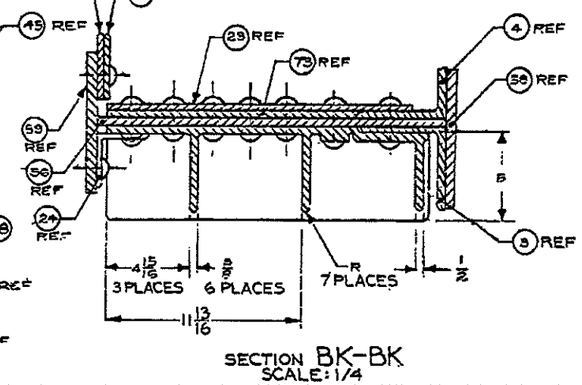

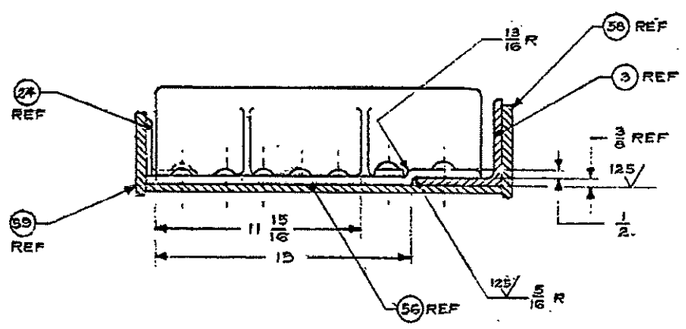

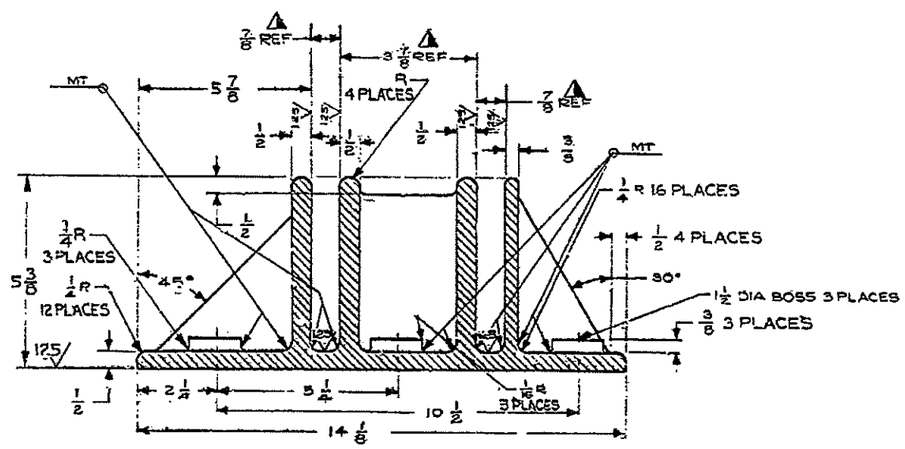

FOR REPAIR ONLY

NEXT ASSY	USED ON	UNLESS OTHERWISE SPECIFIED DIMENSIONS ARE IN INCHES TOLERANCES ON FRACTIONS — DECIMALS — ANGLES —	DRAWN KINGSBURY 22 DEC 64
APPLICATION		MATERIAL:	CHKD
			COMMODITY ENGINEER
			APPROVED FOR QUANTITY PROCUREMENT

U. S. ARMY MOBILITY COMMAND
MOBILITY EQUIPMENT CENTER
ENGINEER RESEARCH AND DEVELOPMENT
LABORATORIES, FORT BELVOIR, VA.

PANEL STRUCTURE,
END, FEMALE

SIZE	CODE IDENT NO.	
D	97403	13211E 7844

SCALE 1/8 SHEET 21

REV. 17 AUG. 1964

REVISIONS				
ZONE	LTR	DESCRIPTION	DATE	APPROVED
	A	SEE ENGRG. REV. NOTICE	30 DEC 69	
	D	SEE NOR.	1 MAY 72	JCF TH
	E	SEE NOR.	11 APR 74	
	J	SEE NOR.	7 MAR 78	
	AC	SEE ECP NO. RAD-B1084	01-01-05	GJU

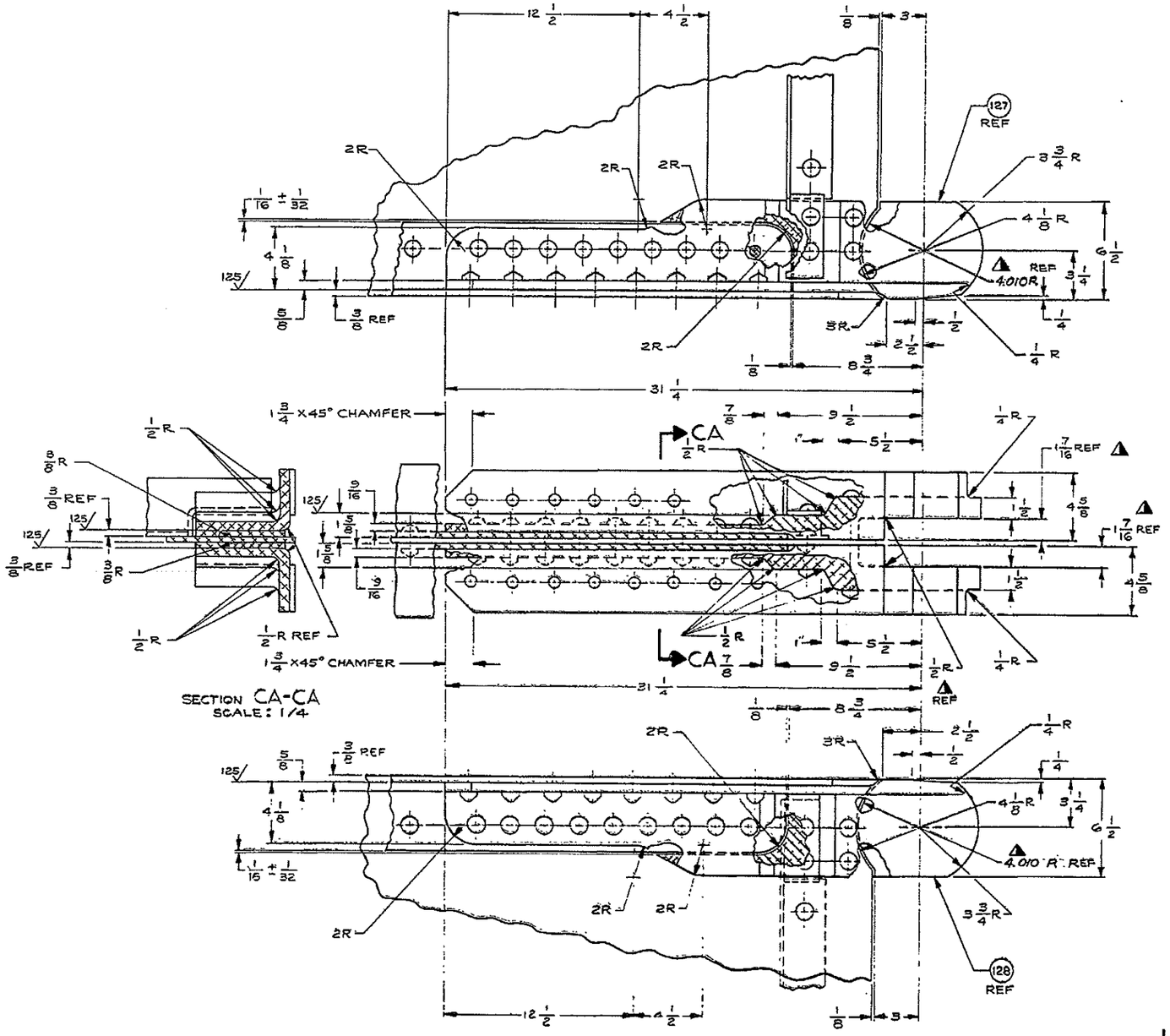

FOR REPAIR ONLY

FIND NO.	SYM	CODE IDENT	DWG SIZE	PART OR IDENTIFYING NO.	QTY REQD	NOMENCLATURE OR DESCRIPTION	SPECIFICATION	MATERIAL

LIST OF MATERIAL

SC—SOURCE CONTROL DWG. B—BULK MATERIAL
SPC—SPEC CONTROL DWG.

NEXT ASSY	USED ON
APPLICATION	

UNLESS OTHERWISE SPECIFIED
DIMENSIONS ARE IN INCHES
TOLERANCES ON
FRACTIONS —
DECIMALS —
ANGLES —

MATERIAL: —

DRAWN D. SCHMITT 1-7-65
CHECKED

COMMODITY ENGINEER 9 Aug 1965
APPROVED FOR QUANTITY PROCUREMENT
CHIEF, ENGINEERING DEPT. 9 Aug 1965

U. S. ARMY MOBILITY COMMAND
MOBILITY EQUIPMENT CENTER
ENGINEER RESEARCH AND DEVELOPMENT
LABORATORIES, FORT BELVOIR, VA.

PANEL STRUCTURE, END, FEMALE

SIZE D | CODE IDENT NO. 97403 | 13211E7844

SCALE 1/8 | SHEET 22

REV. 17 AUG. 1964