ARMY TM 9-2320-280-24P-2
AIR FORCE TO 36A12-1A-3044-2
MARINE CORPS TM 2320-24P/8B
(SUPERSEDES TM 9-2320-280-24P-2, 31 January 1996)

VOLUME NO. 2

TECHNICAL MANUAL

UNIT, DIRECT SUPPORT AND GENERAL SUPPORT MAINTENANCE REPAIR PARTS AND SPECIAL TOOLS LIST

FOR

TRUCK, UTILITY: CARGO/TROOP CARRIER, 1-1/4 TON, 4X4, M998 (2320-01-107-7155) (EIC: BBD); M998A1 (2320-01-371-9577) (EIC: BBN);

TRUCK, UTILITY: CARGO/TROOP CARRIER, 1-1/4 TON, 4X4, W/WINCH, M1038 (2320-01-107-7156) (EIC: BBE); M1038A1 (2320-01-371-9578) (EIC: BBP);

TRUCK, UTILITY: HEAVY VARIANT, 4X4, M1097 (2320-01-346-9317) (EIC: BBM); M1097A1 (2320-01-371-9583) (EIC: BBU); M1097A2 (2320-01-380-8604) (EIC: BB6); M1123 (2320-01-455-9593) (EIC: B6G);

TRUCK, UTILITY: TOW CARRIER, ARMORED, 1-1/4 TON, 4X4, M966 (2320-01-107-7153) (EIC: BBC); M966A1 (2320-01-372-3932) (EIC: BBX); M1121 (2320-01-456-1282) (EIC: B6H);

TRUCK, UTILITY: TOW CARRIER, W/SUPPLEMENTAL ARMOR, 1-1/4 TON, 4X4, M1045 (2320-01-146-7191); M1045A1 (2320-01-371-9580) (EIC: BBR); M1045A2 (2320-01-380-8229) (EIC: BB5);

TRUCK, UTILITY: TOW CARRIER, W/SUPPLEMENTAL ARMOR, 1-1/4 TON, 4X4, W/WINCH, M1046 (2320-01-146-7188); M1046A1 (2320-01-371-9582) (EIC: BBT);

TRUCK, UTILITY: ARMAMENT CARRIER, ARMORED, 1-1/4 TON, 4X4, M1025 (2320-01-128-9551) (EIC: BBF); M1025A1 (2320-01-371-9584) (EIC: BBV); M1025A2 (2320-01-380-8233) (EIC: BB3);

TRUCK, UTILITY: ARMAMENT CARRIER, ARMORED, 1-1/4 TON, 4X4, W/WINCH, M1026 (2320-01-128-9552) (EIC: BBG); M1026A1 (2320-01-371-9579) (EIC: BBQ);

TRUCK, UTILITY: ARMAMENT CARRIER, W/SUPPLEMENTAL ARMOR, 1-1/4 TON, 4X4, M1043 (2320-01-146-7190); M1043A1 (2320-01-372-3933) (EIC: BBY); M1043A2 (2320-01-380-8213) (EIC: BB4);

TRUCK, UTILITY: ARMAMENT CARRIER, W/SUPPLEMENTAL ARMOR, 1-1/4 TON, 4X4, W/WINCH, M1044 (2320-01-146-7189); M1044A1 (2320-01-371-9581) (EIC: BBS);

TRUCK, UTILITY: S250 SHELTER CARRIER, 4X4, M1037 (2320-01-146-7193) (EIC: BBK);

TRUCK, UTILITY: S250 SHELTER CARRIER, 4X4, W/WINCH, M1042 (2320-01-146-7187);

TRUCK, AMBULANCE, 2-LITTER, ARMORED, 4X4, M996 (2310-01-111-2275) (EIC: BBB); M996A1 (2310-01-372-3935) (EIC: BB2);

TRUCK, AMBULANCE, 4-LITTER, ARMORED, 4X4, M997 (2310-01-111-2274) (EIC: BBA); M997A1 (2310-01-372-3934) (EIC: BBZ); M997A2 (2310-01-380-8225) (EIC: BB8);

TRUCK, AMBULANCE, 2-LITTER, SOFT TOP, 4X4, M1035 (2310-01-146-7194); M1035A1 (2310-01-371-9585) (EIC: BBW); M1035A2 (2310-01-380-8290) (EIC: BB9).

Approved for public release; distribution is unlimited.

HEADQUARTERS, DEPARTMENTS OF THE ARMY, THE AIR FORCE, AND MARINE CORPS

MARCH 2001

LIST OF EFFECTIVE PAGES

Date of issue of volume 2 is: 30 March 2001

Revision ..... 0 .....30 March 2001

TOTAL NUMBER OF PAGES IN VOLUME 2 IS 875. CONSISTING OF THE FOLLOWING:

Page No. . . . . .*Change No.

VOLUME 2

A 0
B Blank 0
i - vi 0
vii blank 0
Figure 329 - Page 498-1 0
Kits-1 - Kits - 20 0
Bulk-1 - Bulk- 3 0
Figure 499-1 - Page 512-1 0
Index 1 - Index 22 0

*Zero in this column indicates original page.

* ARMY TM 9-2320-280-24P-2
AIR FORCE TO 36A12-1A-3044-2
MARINE CORPS TM 2320-24P/8B

TECHNICAL MANUAL
NO. 9-2320-280-24P-2
NO. 2320-24P/8B

TECHNICAL ORDER
NO. 36A12-1A-3044-2

HEADQUARTERS, DEPARTMENTS
OF THE ARMY, THE
AIR FORCE, AND MARINE CORPS

WASHINGTON, D.C. *30 March 2001*

TECHNICAL MANUAL

VOLUME 2 OF 2
UNIT, DIRECT SUPPORT AND GENERAL SUPPORT MAINTENANCE
REPAIR PARTS AND SPECIAL TOOLS LIST
FOR

TRUCK, UTILITY: CARGO/TROOP CARRIER, 1-1/4 TON, 4X4, M998 (2320-01-107-7155) (EIC: BBD); M998A1 (2320-01-371-9577) (EIC: BBN);

TRUCK, UTILITY: CARGO/TROOP CARRIER, 1-1/4 TON, 4X4, W/WINCH, M1038 (2320-01-107-7156) (EIC: BBE); M1038A1 (2320-01-371-9578) (EIC: BBP);

TRUCK, UTILITY: HEAVY VARIANT, 4X4, M1097 (2320-01-346-9317) (EIC: BBM); M1097A1 (2320-01-371-9583) (EIC: BBU); M1097A2 (2320-01-380-8604) (EIC: BB6); M1123 (2320-01-455-9593) (EIC: B6G);

TRUCK, UTILITY: TOW CARRIER, ARMORED, 1-1/4 TON, 4X4, M966 (2320-01-107-7153) (EIC: BBC); M966A1 (2320-01-372-3932) (EIC: BBX); M1121 (2320-01-456-1282) (EIC: B6H);

TRUCK, UTILITY: TOW CARRIER, W/SUPPLEMENTAL ARMOR, 1-1/4 TON, 4X4, M1045 (2320-01-146-7191); M1045A1 (2320-01-371-9580) (EIC: BBR); M1045A2 (2320-01-380-8229) (EIC: BB5);

TRUCK, UTILITY: TOW CARRIER, W/SUPPLEMENTAL ARMOR, 1-1/4 TON, 4X4, W/WINCH, M1046 (2320-01-146-7188); M1046A1 (2320-01-371-9582) (EIC: BBT);

TRUCK, UTILITY: ARMAMENT CARRIER, ARMORED, 1-1/4 TON, 4X4, M1025 (2320-01-128-9551) (EIC: BBF); M1025A1 (2320-01-371-9584) (EIC: BBV); M1025A2 (2320-01-380-8233) (EIC: BB3);

TRUCK, UTILITY: ARMAMENT CARRIER, ARMORED, 1-1/4 TON, 4X4, W/WINCH, M1026 (2320-01-128-9552) (EIC: BBG); M1026A1 (2320-01-371-9579) (EIC: BBQ);

TRUCK, UTILITY: ARMAMENT CARRIER, W/SUPPLEMENTAL ARMOR, 1-1/4 TON, 4X4, M1043 (2320-01-146-7190); M1043A1 (2320-01-372-3933) (EIC: BBY); M1043A2 (2320-01-380-8213) (EIC: BB4);

TRUCK, UTILITY: ARMAMENT CARRIER, W/SUPPLEMENTAL ARMOR, 1-1/4 TON, 4X4, W/WINCH, M1044 (2320-01-146-7189); M1044A1 (2320-01-371-9581) (EIC: BBS);

TRUCK, UTILITY: S250 SHELTER CARRIER, 4X4, M1037 (2320-01-146-7193) (EIC: BBK);

TRUCK, UTILITY: S250 SHELTER CARRIER, 4X4, W/WINCH, M1042 (2320-01-146-7187);

TRUCK, AMBULANCE, 2-LITTER, ARMORED, 4X4, M996 (2310-01-111-2275) (EIC: BBB); M996A1 (2310-01-372-3935) (EIC: BB2);

TRUCK, AMBULANCE, 4-LITTER, ARMORED, 4X4, M997 (2310-01-111-2274) (EIC: BBA); M997A1 (2310-01-372-3934) (EIC: BBZ); M997A2 (2310-01-380-8225) (EIC: BB8);

TRUCK, AMBULANCE, 2-LITTER, SOFT TOP, 4X4, M1035 (2310-01-146-7194); M1035A1 (2310-01-371-9585) (EIC: BBW); M1035A2 (2310-01-380-8290) (EIC: BB9).

Current as of 1 January 2001

REPORTING ERRORS AND RECOMMENDING IMPROVEMENTS

You can help improve this publication. If you find any mistakes or if you know of a way to improve the procedures, please let us know. Submit your DA Form 2028 (Recommended Changes to Equipment Technical Publications), through the Internet, on the Army Electronic Product Support (AEPS) website. The Internet address is http://aeps.ria.army.mil. If you need a password, scroll down and click on "ACCESS REQUEST FORM". The DA Form 2028 is located in the ONLINE FORMS PROCESSING section of the AEPS. Fill out the form and click on SUBMIT. Using this form on the AEPS will enable us to respond quicker to your comments and better manage the DA Form 2028 program. You may also mail, fax or E-mail your letter or DA Form 2028 direct to: AMSTA-LC-CI/TECH PUBS, TACOM-RI, 1 Rock Island Arsenal, Rock Island, IL 61299-7630. The email address is TACOM-TECH-PUBS@ria.army.mil. The fax number is DSN 793-0726 or Commercial (309) 782-0726.

Approved for public release; distribution is unlimited.

* This manual supersedes TM 9-2320-280-24P-2, dated 31 January 1996.

TABLE OF CONTENTS
VOLUME 2 OF 2

			Page	Illus Figure
Group 22	Body, chassis, and hull accessory items (Cont'd)			
	2202	Split rearview mirror and mounting hardware	329-1	329
	2202	Reflectors	330-1	330
	2202	Diverter assembly, defroster, and heater ducting	331-1	331
	2202	A2 diverter assembly, defroster, heater ducting, and radio brackets	332-1	332
	2202	Heater assembly, water valve, and controls	333-1	333
	2202	Heater fuel lines, filter to tank, M996, M996A1, M997, M997A1, and M997A2 ambulance	334-1	334
	2202	Fuel lines, personnel heater to fuel filter, M996 and M996A1 ambulance	335-1	335
	2202	Fuel lines, personnel heater to fuel filter, M997, M997A1, and M997A2 ambulance	336-1	336
	2202	Personnel heater assembly and attaching hardware, M996 and M996A1 ambulance	337-1	337
	2202	Antenna and intercom cables and mounting hardware, M997, M997A1, and M997A2 ambulance	338-1	338
	2202	Antenna and intercom cables and mounting hardware, M996 and M996A1 ambulance	339-1	339
	2202	Antenna mount and mounting hardware, M996 and M996A1 ambulance	340-1	340
	2202	Antenna mount and mounting hardware, M997, M997A1, and M997A2 ambulance	341-1	341
	2202	Heater blower assembly, M996 and M996A1 ambulance	342-1	342
	2202	Heater, filter, and attaching hardware, M997, M997A1, and M997A2 ambulance	343-1	343
	2202	Air intake filter, M996 and M996A1 ambulance	344-1	344
	2202	Heater assembly, multifuel, B-model, M996, M996A1, M997, M997A1, and M997A2 ambulance	345-1	345
	2202	Heater grille, exhaust pipe, and mounting hardware, M996, and M996A1 ambulance	346-1	346
	2202	Heater grille, exhaust pipe, and mounting hardware, M997, M997A1, and M997A2 ambulance	347-1	347
	2202	Heater assembly, multifuel, A-model, M997, M997A1, and M997A2 ambulance	348-1	348
	2202	Heater component bracket assembly, B-model, M996, M996A1, M997, M997A1, and M997A2 ambulance	349-1	349
	2202	Burner assembly, B-model, M996, M996A1, M997, M997A1, and M997A2 ambulance	350-1	350
	2202	Burner assembly, A-model, M997, M997A1, and M997A2 ambulance	351-1	351
	2202	Sun visor assembly and mounting hardware	352-1	352
	2202	Ambulance spreader assembly	353-1	353
	2210	Data plates, dash panel	354-1	354
	2210	Data plates, battery cable and slave receptacle	355-1	355
	2210	Data plates, surge tank, fan shroud, and cook stove	356-1	356
	2210	Data plates, generator, transfer case, and engine container	357-1	357
	2210	Data plates, winch	358-1	358
	2210	Data plates, TOW carrier	359-1	359
	2210	Data plates, TOW carrier	360-1	360
	2210	Data plates, sights, traversing unit, night vision goggles, and radiac meter	361-1	361

TABLE OF CONTENTS (Cont'd)

			Page	Illus Figure
	2210	Data plates and identification tags, M996, M996A1, M997, M997A1, and M997A2 ambulance	362-1	362
Group 33		Special purpose kits	363-1	363
	3301	Engine shipping container assembly	363-1	363
	3303	Arctic kit, fuel injection pump, engine gaskets, and CDR tube	364-1	364
	3303	Arctic kit, pan cover and heater tube	365-1	365
	3303	Arctic kit, control box, gas cap, fuel pump, and fuel lines	366-1	366
	3303	Arctic kit, control box assembly	367-1	367
	3303	Arctic kit, heater assembly, plenum assembly, and related components	368-1	368
	3303	Arctic kit, battery box components, insulation, and control box connector	369-1	369
	3303	Arctic kit, diverter box, defroster, heater ducting, and radio rack bracket	370-1	370
	3303	Arctic kit, heater duct assembly	371-1	371
	3303	Arctic kit, diverter box, ducting, insulation, and radio mounting brackets	372-1	372
	3303	Arctic kit, two man crew, bow, and mounting components	373-1	373
	3303	Arctic kit, two man crew curtain fasteners	374-1	374
	3303	Arctic kit, two man crew, top curtain, rear curtain, and door assemblies	375-1	375
	3303	Arctic kit, four man crew, top enclosure, bows, and mounting components	376-1	376
	3303	Arctic kit, door hinges, and curtain channels	377-1	377
	3303	Arctic kit, four man crew, top curtain, rear curtain, and door assemblies	378-1	378
	3303	Swingfire heater kit and related parts	379-1	379
	3033	Swingfire heater kit, circuit breaker and related parts	380-1	380
	3303	Swingfire heater kit, harness assemblies	381-1	381
	3303	Two door seat and floor covers	382-1	382
	3303	Cargo floor cover and harness assembly	383-1	383
	3303	Winterization kit, fuel pump and attaching hardware	384-1	384
	3303	Fuel pump tube assembly	385-1	385
	3303	Winterization kit, fuel line and jumper cable	386-1	386
	3303	Winterization kit, heater and exhaust diverter assembly	387-1	387
	3303	Winterization kit, control box, filter, and cover assembly	388-1	388
	3303	Seat support assemblies and mounting hardware	389-1	389
	3303	Step assembly, support assembly, and mounting hardware	390-1	390
	3303	Top plate support and attaching hardware	391-1	391
	3303	Fuel can bracket, antenna mounting bracket, and composite light housing mounting hardware	392-1	392
	3303	Mounting plates and ventilator exhaust ducting	393-1	393
	3303	Screw caps and winterization instruction plate	394-1	394
	3303	Top cover assembly and mounting hardware	395-1	395
	3303	Wiring harness channel and hardware	396-1	396
	3303	End closures, door assembly, and mounting hardware	397-1	397
	3305	Deep water fording kit, intake and exhaust systems	398-1	398
	3305	Deep water fording kit, selector valve, sensor cup, and vent lines	399-1	399
	3305	Deep water fording kit, hydro-boost vent line, engine and transmission dipstick, and tube assemblies	400-1	400
	3305	Supplemental deep water fording kit	401-1	401
	3307	Troop seat kit, safety strap, and mounting hardware	402-1	402

TABLE OF CONTENTS (Cont'd)

		Page	Illus Figure
3307	Troop seat assembly, left and right	403-1	403
3307	Alternator, 100 AMP kit (PRESTOLITE)	404-1	404
3307	Alternator, 100 AMP kit (NIEHOFF)	405-1	405
3307	Alternator, 100 AMP (PRESTOLITE)	406-1	406
3307	Alternator, 100 AMP (NIEHOFF)	407-1	407
3307	Alternator, 200 AMP kit	408-1	408
3307	Communications kit, radio rack assembly, and mounting hardware, AN/GRC-160 and TSEC/KY-57	409-1	409
3307	Communications kit, radio cables, AN/GRC-160, AN/VRC-46, and TSEC/KY-57	410-1	410
3307	Communications kit, radio rack assembly, and mounting hardware, AN/GRC-160 and TSEC/KY-57, TOW carrier	411-1	411
3307	Communications kit, radio cables, AN/GRC-160, AN/VRC-46, and TSEC/KY-57, TOW carrier	412-1	412
3307	Communications kit, radio rack assembly, AN/VRC-47 and (2) TSEC/KY-57 assemblies	413-1	413
3307	Communications kit, radio cables, AN/VRC-47 and (2) TSEC/KY-57 assemblies	414-1	414
3307	Communications kit, radio rack assembly, AN/VRC-49 and (2) TSEC/KY-57 assemblies	415-1	415
3307	Communications kit, radio cables, AN/VRC-49 and (2) TSEC/KY-57 assemblies	416-1	416
3307	Communications kit, radio rack assembly	417-1	417
3307	Communications kit, radio rack assembly mounting hardware, AN/VRC-46	418-1	418
3307	Communications kit, radio rack assembly mounting hardware, (2) AN/VRC-46	419-1	419
3307	Communications kit, radio rack assembly mounting hardware, (3) AN/VRC-46	420-1	420
3307	Communications kit, radio rack assembly mounting hardware, AN/VRC-47	421-1	421
3307	Communications kit, radio rack assembly mounting hardware, AN/VRC-48	422-1	422
3307	Communications kit, radio rack assembly mounting hardware, AN/VRC-49	423-1	423
3307	Communications kit, radio cable, main power	424-1	424
3307	Communications kit, radio cables, AN/VRC-47 and AN/VRC-48	425-1	425
3307	Communications kit, radio cables, AN/VRC-46, (2) AN/VRC-46, (3) AN/VRC-46, AN/VRC-47, AN/VRC-48, and AN/VRC-49	426-1	426
3307	Communications kit, radio cables, (2) AN/VRC-46, (3) AN/VRC-47, and AN/VRC-49	427-1	427
3307	Communications kit, radio cables, (3) AN/VRC-46	428-1	428
3307	81 MM mortar kit, container assembly, and stowage rack	429-1	429
3307	81 MM mortar kit, equipment rack assembly, barrel stowage bracket, and bipod stowage tray assembly	430-1	430
3307	Traversing bar kit	431-1	431
3307	Rearview mirror mounting kit	432-1	432
3307	Cargo barrier extension kit	433-1	433
3307	Slave receptacle kit	434-1	434
3307	Slave receptacle with power cable assembly kit	435-1	435
3307	Power steering oil cooler kit	436-1	436
3307	Brushguard kit (basic and A1 series)	437-1	437
3307	Kit, S250 shelter mounting components	438-1	438
3307	Kit, S250 shelter tailgate mounting components	439-1	439
3307	Kit, camouflage rack and stowage rack assembly	440-1	440

TABLE OF CONTENTS (Cont'd)

		Page	Illus Figure
3307	Kit, prime mover, lt. howitzer, 105MM L119, front bumper	441-1	441
3307	Kit, prime mover, lt. howitzer, 105MM L119, rear bumper	442-1	442
3307	Kit, prime mover, lt. howitzer, 105MM L119, winch	443-1	443
3307	Kit, prime mover, lt. howitzer, 105MM L119, winch control and storage box	444-1	444
3307	Kit, prime mover, lt. howitzer, 105MM L119, trailer receptacle and body wiring harness	445-1	445
3307	Kit, prime mover, lt. howitzer, 105MM L119, ammo rack and sight boxes stowage	446-1	446
3307	Kit, prime mover, lt. howitzer, 105MM L119, telephone, remote, and tripod stowage	447-1	447
3307	Kit, prime mover, lt. howitzer, 105MM L119, fuel can, water can, section chest, and spade stowage	448-1	448
3307	Kit, prime mover, lt. howitzer, 105MM L119, G.D.U. and G.D.U. battery stowage	449-1	449
3307	Kit, prime mover, lt. howitzer, 105MM L119, aiming post and cable reel stowage	450-1	450
3307	Kit, prime mover, lt. howitzer, 105MM L119, pioneer tool stowage tray hardware and parking brake hardware	451-1	451
3307	Kit, towed vulcan system	452-1	452
3307	Kit, pintle extension	453-1	453
3307	Kit, rear seat assembly	454-1	454
3307	Kit, man portable air-defense system (MANPADS)	455-1	455
3307	Kit, 9,000 lb winch	456-1	456
3307	Kit, 9,000 lb winch	457-1	457
3307	9,000 lb winch assembly	458-1	458
3307	Modification kit, sun visor	459-1	459
3307	Modification kit, windshield retainer	460-1	460
3307	Left rearview mirror relocation kit	461-1	461
3307	Brushguard kit	462-1	462
3307	Underbody protection kit with and without winch	463-1	463
3307	Underbody protection kit, transfercase, fuel tank shields, and sway bar link nuts	464-1	464
3307	Cover, access cargo floor modification kit	465-1	465
3307	FR12 refrigerant parts kit	466-1	466
3307	R-12 to FR12 refrigerant conversion retrofit kit	467-1	467
3307	Hand throttle control kit	468-1	468
3307	10,500 lb hydraulic winch accessory kit	469-1	469
3307	10,500 lb hydraulic winch winch accessory kit	470-1	470
3307	10,500 lb hydraulic winch accessory kit	471-1	471
3307	100 AMP dual voltage alternator and regulator mounting hardware kit	472-1	472
3307	100/200 AMP dual voltage alternator and regulator mounting hardware kit	473-1	473
3307	100/200 AMP dual voltage alternator wiring harness	474-1	474
3307	200 AMP dual voltage alternator and regulator mounting hardware kit	475-1	475
3307	400 AMP alternator kit	476-1	476
3307	Power steering pump and hoses-400 AMP alternator kit	477-1	477
3307	Speedometer cable assembly-400 AMP alternator kit	478-1	478
3307	Dipstick and dummy connector plug-400 AMP alternator kit	479-1	479
3307	400 AMP alternator wiring harness cable assemblies	480-1	480
3307	Buss assembly-400 AMP alternator kit	481-1	481
3307	Tachometer parts kit	482-1	482
3307	Tachometer parts kit	483-1	483

TABLE OF CONTENTS (Cont'd)

		Page	Illus Figure
	3307 Tachometer parts kit	484-1	484
	3307 Precision Lightweight Global Positioning System Receiver (PLGR)	485-1	485
	3307 Kit, intercom bracket	486-1	486
	3307 Kit, rear hatch support	487-1	487
Group 47	Gauges, weighing, and measuring devices	488-1	488
	4701 Speedometer, speedometer drive, and related parts	488-1	488
	4702 Air restriction indicator assembly	489-1	489
Group 52	Refrigeration, air conditioner, heater, and air conditioning components	490-1	490
	5203 Air conditioner compressor and mounting hardware, M997 and M997A1 ambulance	490-1	490
	5203 Air conditioner compressor assembly, M997 and M997A1 ambulance	491-1	491
	5217 Air conditioner lines and fittings, M997, M997A1, and M997A2 ambulance	492-1	492
	5217 Air conditioner condenser and evaporator lines, M997, M997A1, and M997A2 ambulance	493-1	493
	5230 Heater and air conditioning condenser, M997, M997A1, and M997A2 ambulance	494-1	494
	5230 Heater and air conditioning condenser, M997, M997A1, and M997A2 ambulance	495-1	495
	5241 Air conditioning evaporator and mounting hardware, M997, M997A1, and M997A2 ambulance	496-1	496
	5243 Evaporator blower motor assembly covers, M997, M997A1, and M997A2 ambulance	497-1	497
	5243 Evaporator blower motor assembly, M997, M997A1, and M997A2 ambulance	498-1	498
Group 94	Kits	Kits 1	
	9401 Service kits	Kits-1	
Group 95	General use standardized parts	Bulk-1	
	9501 Hardware supplies and bulk material, common	Bulk-1	
Section III	SPECIAL TOOLS LIST	499-1	
Group 26	Tools and test equipment	499-1	499
	2604 Special tools, drive belts and transmission	499-1	499
	2604 Special tools, transmission	500-1	500
	2604 Special tools, transfer case	501-1	501
	2604 Special tools, axle differential	502-1	502
	2604 Special tools, geared hub and steering	503-1	503
	2604 Special tools, steering pump, body, and speedometer drive	504-1	504
	2604 Special tools, multipurpose	505-1	505
	2604 Special tools, air conditioner compressor	506-1	506
	2604 Special tools, air conditioner compressor	507-1	507
	2604 Special tools, air conditioner compressor	508-1	508
	2604 Special tools, air conditioner compressor tool kit	509-1	509
	2604 Special tools, transmission, transfer case, and engine A2	510-1	510
	2604 Special tools, transmission, transfer case, and engine A2	511-1	511
	2604 Pinion setting kit	512-1	512
Section IV	CROSS-REFERENCE INDEXES	I-11	
	National Stock Number Index	I-1	
	Part Number Index	I-100	

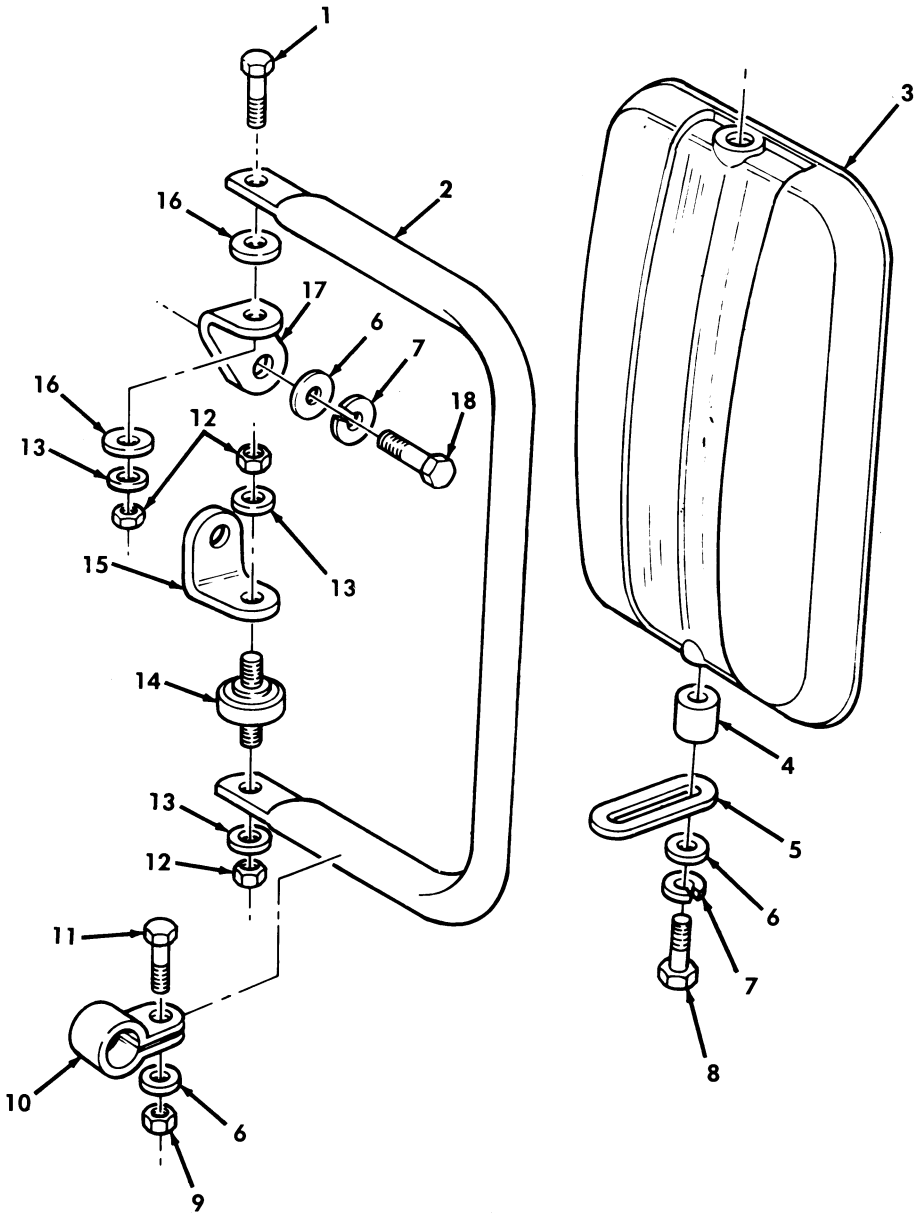

Figure 329. Split Rearview Mirror and Mounting Hardware.

(1) ITEM NO	(2) SMR CODE	(3) NSN	(4) CAGEC	(5) PART NUMBER	(6) DESCRIPTION AND USABLE ON CODES(UOC)	(7) QTY
					GROUP 2202 ACCESSORY ITEMS	
					FIG. 329 SPLIT REARVIEW MIRROR AND MOUNTING HARDWARE	
1	PAOZZ	5305005432419	80204	B1821BH038C113N	SCREW,CAP,HEXAGON H 3/8-16 X 1-1/8, USBL EFF 100,000 AND ABOVE.....	1
2	PAOZZ	2540013141188	19207	12342131	ARM,REARVIEW MIRROR USBL EFF 100, 000 AND ABOVE.....	1
3	PAOZZ	2540013843856	70082	0442-A	MIRROR HEAD,VEHICUL R.H. USBL EFF 100,000 AND ABOVE.....	1
3	PAOZZ	2540013141190	70082	0441-A	MIRROR HEAD,VEHICUL L.H. USBL EFF 100,000 AND ABOVE..... UOC:AVY,A11,A13,A14,A15,A20,A24,A25, A26,A27,B16,B17,B18,HVY,H11,H13,H14, H15,H16,H17,H18,H20,H21,H24,H25,H26, H27,H28,MMM	1
3	PAOZZ	2540014108794	70082	1351	MIRROR HEAD,VEHICUL L.H..... UOC:BVY,B15,B20,B24,B25,C17,NNN	1
4	PAOZZ	5365013153595	19207	12342139	SPACER,SLEEVE USBL EFF 100,000 AND ABOVE.....	2
5	PAOZZ	2540013142101	19207	12342138	ARM,REARVIEW MIRROR USBL EFF 100, 000 AND ABOVE.....	2
6	PAOZZ	5310013893455	79410	120393	WASHER,LOCK 5/16,USBL EFF 100,000 AND ABOVE.....	6
7	PAOZZ	5310004079566	96906	MS35338-45	WASHER,LOCK 5/16,USBL EFF 100,000 AND ABOVE.....	4
8	PAOZZ	5306002258503	96906	MS90725-39	BOLT,MACHINE 5/16-18 X 1-3/4, USBL EFF 100,000.....	2
9	PAOZZ	5310008140673	96906	MS51943-33	NUT,SELF-LOCKING,HE 5/16-18,USBL EFF 100,000 AND ABOVE.....	2
10	PAOZZ	5340013153611	19207	12342132	CLAMP,LOOP USBL EFF 100,000 AND ABOVE.....	2
11	PAOZZ	5306002258499	96906	MS90725-34	BOLT,MACHINE 5/16-18 X 1.00 USBL EFF 100,000 AND ABOVE.....	2
12	PAOZZ	5310011269404	24617	9422277	NUT,SELF-LOCKING,HE 3/8-16 USBL EFF 100,000 AND ABOVE.....	6
13	PAOZZ	5310000806004	96906	MS27183-14	WASHER,FLAT 3/8,USBL EFF 100,000 AND ABOVE.....	6
14	PAOZZ	5307013162986	70082	6185	STUD,LOCKED IN USBL EFF 100,000 AND ABOVE.....	2
15	PAOZZ	5340014086460	19207	12343063	BRACKET,ANGLE LOWER L.H..... UOC:BVY,B15,B20,B24,B25,C17,NNN	1
15	PFOZZ	5340013141956	19207	12342137	BRACKET,ANGLE LOWER L.H. USBL EFF 100,000 AND ABOVE..... UOC:AVY,A11,A13,A14,A15,A20,A24,A25, A26,A27,B16,B17,B18,HVY,H11,H13,H14, H15,H16,H17,H18,H20,H21,H24,H25,H26, H27,H28,MMM	1
15	PAOZZ	5340013162959	19207	12342136	BRACKET,ANGLE LOWER R.H. USBL EFF 100,000 AND ABOVE.....	1
16	PAOZZ	5310013133562	96906	MS51859-20	WASHER,FLAT 3/8,USBL EFF 100,000 AND ABOVE.....	4

(1) ITEM NO	(2) SMR CODE	(3) NSN	(4) CAGEC	(5) PART NUMBER	(6) DESCRIPTION AND USABLE ON CODES(UOC)	(7) QTY
17	PAOZZ	5340014086456	19207	12343062	BRACKET,ANGLE UPPER L.H..... UOC:BVY,B15,B20,B24,B25,C17,NNN	1
17	PAOZZ	5340013141955	19207	12342135	BRACKET,ANGLE UPPER L.H.,USBL EFF 100,000 AND ABOVE..... UOC:AVY,A11,A13,A14,A15,A20,A24,A25, A26,A27,B16,B17,B18,HVY,H11,H13,H14, H15,H16,H17,H18,H20,H21,H24,H25,H26, H27,H28,MMM	1
17	PAOZZ	5340013161507	19207	12342134	BRACKET,ANGLE UPPER R.H. USBL 100, 000 AND ABOVE.....	1
18	PAOZZ	5306002264827	80204	B1821BH031C100N	BOLT,MACHINE 5/16-18 X 1.00,USBL EFF 100,000 AND ABOVE.....	2

END OF FIGURE

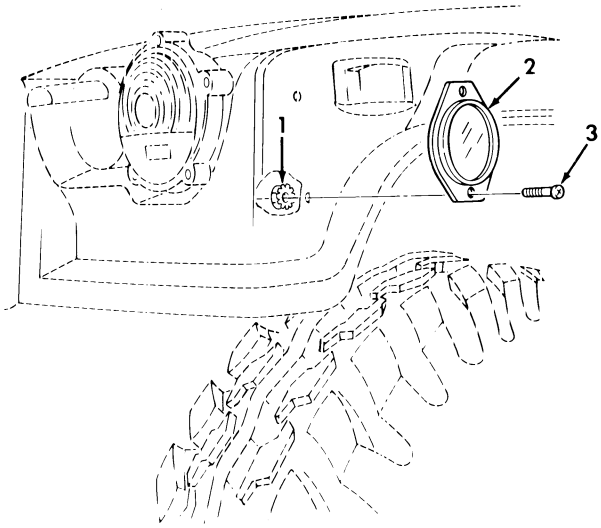

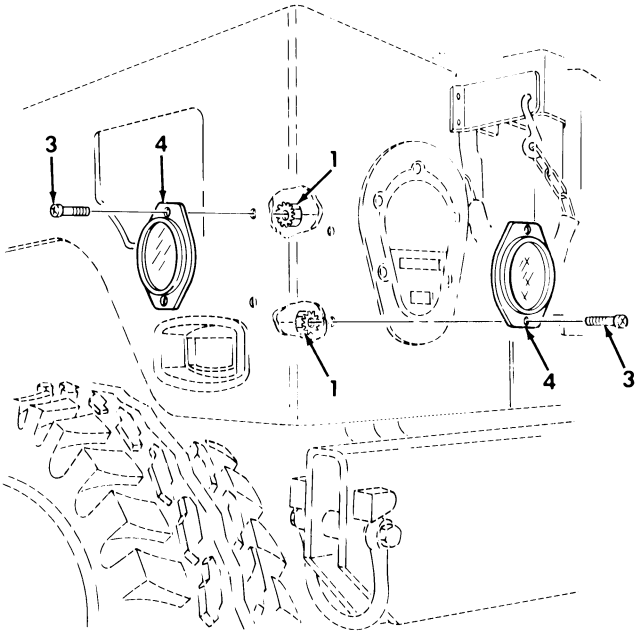

Figure 330. Reflectors.

(1) ITEM NO	(2) SMR CODE	(3) NSN	(4) CAGEC	(5) PART NUMBER	(6) DESCRIPTION AND USABLE ON CODES(UOC)	(7) QTY
					GROUP 2202 ACCESSORY ITEMS	
					FIG. 330 REFLECTORS	
1	PAOZZ	5310012522999	34623	5593033	NUT,SELF-LOCKING,AS 1/4-20.....	12
2	PAOZZ	9905002023639	96906	MS35387-2	REFLECTOR,INDICATIN AMBER.....	2
3	PAOZZ	5305009881724	96906	MS35206-280	SCREW,MACHINE 1/4-20 X 5/8.....	12
4	PAOZZ	9905009772727	80753	49RED	REFLECTOR,INDICATIN RED.....	4

END OF FIGURE

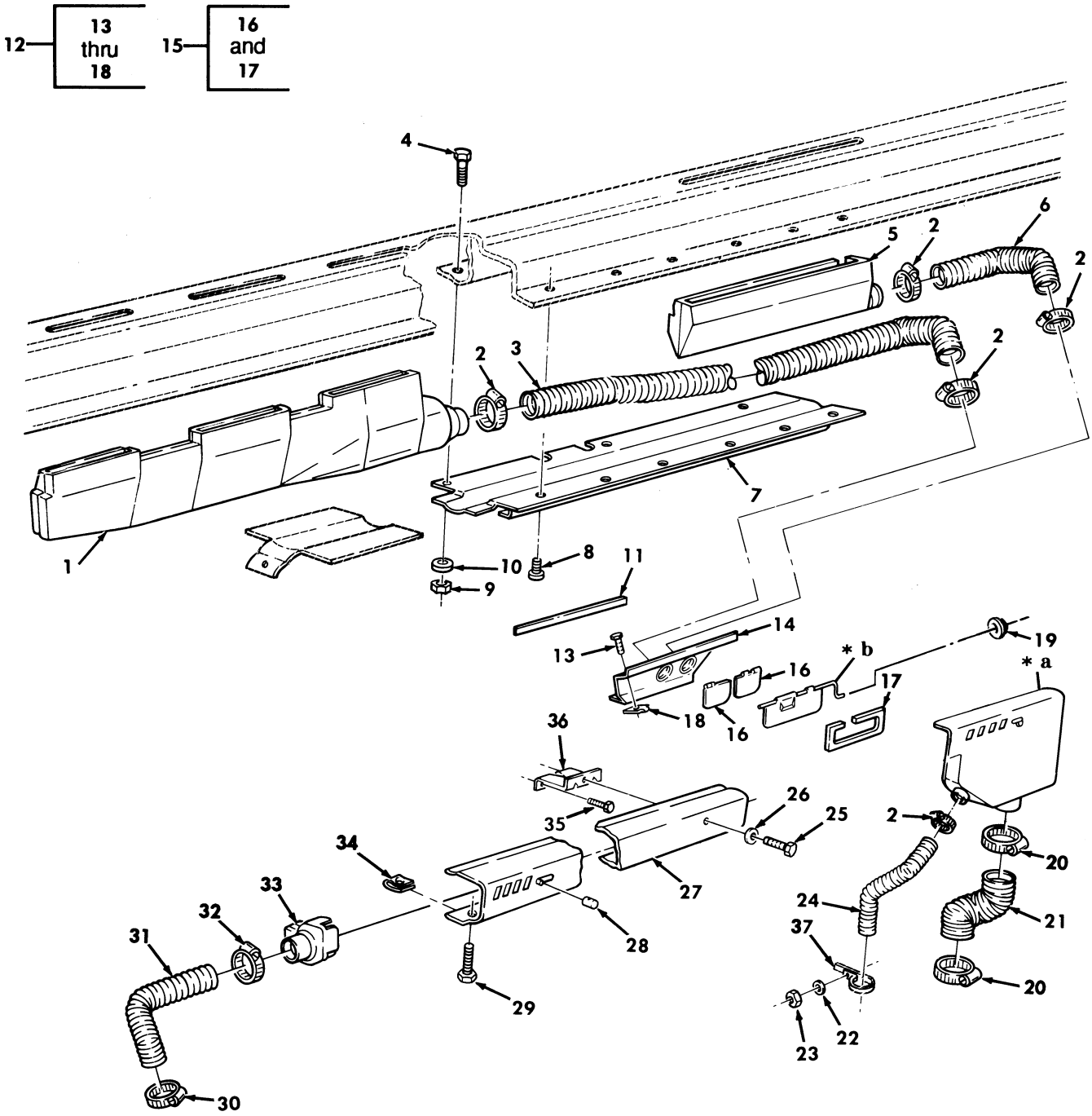

* a PART OF ITEM 12
* b PART OF ITEM 15

Figure 331. Diverter Assembly, Defroster, and Heater Ducting.

(1) ITEM NO	(2) SMR CODE	(3) NSN	(4) CAGEC	(5) PART NUMBER	(6) DESCRIPTION AND USABLE ON CODES(UOC)	(7) QTY
					GROUP 2202 ACCESSORY ITEMS	
					FIG. 331 DIVERTER ASSEMBLY,DEFROSTER ,AND HEATER DUCTING	
1	PFOZZ	2910011845499	19207	12339289	NOZZLE,DEFROSTER L.H..... UOC:AVY,A11,A13,A14,A15,A20,A24,A25, A26,A27,B16,B17,B18,HVY,H11,H13,H14, H15,H16,H17,H18,H20,H21,H24,H25,H26, H27,H28,MMM	1
2	PAOZZ	4730010921904	66295	SIZE83	CLAMP,HOSE..... UOC:AVY,A11,A13,A14,A15,A20,A24,A25, A26,A27,B16,B17,B18,HVY,H11,H13,H14, H15,H16,H17,H18,H20,H21,H24,H25,H26, H27,H28,MMM	5
3	PAOZZ	4720014481655	19207	12339265-1	HOSE,AIR DUCT..... UOC:AVY,A11,A13,A14,A15,A20,A24,A25, A26,A27,B16,B17,B18,HVY,H11,H13,H14, H15,H16,H17,H18,H20,H21,H24,H25,H26, H27,H28,MMM	1
4	PAOZZ	5306012707332	34623	5594178	BOLT,MACHINE 1/4-20 X 7/8..... UOC:AVY,A11,A13,A14,A15,A20,A24,A25, A26,A27,B16,B17,B18,HVY,H11,H13,H14, H15,H16,H17,H18,H20,H21,H24,H25,H26, H27,H28,MMM	3
5	PFOZZ	2910011845498	19207	12339292	NOZZLE,DEFROSTER R.H..... UOC:AVY,A11,A13,A14,A15,A20,A24,A25, A26,A27,B16,B17,B18,HVY,H11,H13,H14, H15,H16,H17,H18,H20,H21,H24,H25,H26, H27,H28,MMM	1
6	MOOZZ		19207	12339265-2	DUCT,FLEX MAKE FROM HOSE,P/N AD778- 08B79,7 INCHES LONG..... UOC:AVY,A11,A13,A14,A15,A20,A24,A25, A26,A27,B16,B17,B18,HVY,H11,H13,H14, H15,H16,H17,H18,H20,H21,H24,H25,H26, H27,H28,MMM	1
7	PFOZZ	2510013070152	34623	5593615	PANEL,BODY,VEHICULA..... UOC:AVY,A11,A13,A14,A15,A20,A24,A25, A26,A27,B16,B17,B18,HVY,H11,H13,H14, H15,H16,H17,H18,H20,H21,H24,H25,H26, H27,H28,MMM	1
8	PAOZZ	5305012553588	7X677	164830	SCREW,TAPPING 3/8-16 X 1/2..... UOC:AVY,A11,A13,A14,A15,A20,A24,A25, A26,A27,B16,B17,B18,HVY,H11,H13,H14, H15,H16,H17,H18,H20,H21,H24,H25,H26, H27,H28,MMM	6
9	PAOZZ	5310000614650	96906	MS51943-31	NUT,SELF-LOCKING,HE 1/4-20..... UOC:AVY,A11,A13,A14,A15,A20,A24,A25, A26,A27,B16,B17,B18,HVY,H11,H13,H14, H15,H16,H17,H18,H20,H21,H24,H25,H26, H27,H28,MMM	3
10	PAOZZ	5310011023270	24617	2436161	WASHER,FLAT 1/4..... UOC:AVY,A11,A13,A14,A15,A20,A24,A25,	3

(1) ITEM NO	(2) SMR CODE	(3) NSN	(4) CAGEC	(5) PART NUMBER	(6) DESCRIPTION AND USABLE ON CODES(UOC)	(7) QTY
					A26,A27,B16,B17,B18,HVY,H11,H13,H14, H15,H16,H17,H18,H20,H21,H24,H25,H26, H27,H28,MMM	
11	PAOZZ	5330012097817	19207	12339228-7	SEAL,RUBBER STRIP..... UOC:AVY,A11,A13,A14,A15,A20,A24,A25, A26,A27,B16,B17,B18,HVY,H11,H13,H14, H15,H16,H17,H18,H20,H21,H24,H25,H26, H27,H28,MMM	1
12	PFOZZ	2510011845497	19207	12339291	HOUSING ASSEMBLY,HE..... UOC:AVY,A11,A13,A14,A15,A20,A24,A25, A26,A27,B16,B17,B18,HVY,H11,H13,H14, H15,H16,H17,H18,H20,H21,H24,H25,H26, H27,H28,MMM	1
13	PAOZZ	5305011878757	7X677	274707	.SCREW,MACHINE #10-24 X 1/2..... UOC:AVY,A11,A13,A14,A15,A20,A24,A25, A26,A27,B16,B17,B18,HVY,H11,H13,H14, H15,H16,H17,H18,H20,H21,H24,H25,H26, H27,H28,MMM	5
14	PFOZZ	2540012101325	19207	12339283	.PANEL ASSEMBLY,DIVE..... UOC:AVY,A11,A13,A14,A15,A20,A24,A25, A26,A27,B16,B17,B18,HVY,H11,H13,H14, H15,H16,H17,H18,H20,H21,H24,H25,H26, H27,H28,MMM	1
15	PAOZZ	2510012102748	19207	12339273	.DOOR,METAL,SWINGING..... UOC:AVY,A11,A13,A14,A15,A20,A24,A25, A26,A27,B16,B17,B18,HVY,H11,H13,H14, H15,H16,H17,H18,H20,H21,H24,H25,H26, H27,H28,MMM	1
16	PAOZZ	5330012097842	19207	12339267	..SEAL,NONMETALLIC SP..... UOC:AVY,A11,A13,A14,A15,A20,A24,A25, A26,A27,B16,B17,B18,HVY,H11,H13,H14, H15,H16,H17,H18,H20,H21,H24,H25,H26, H27,H28,MMM	2
17	PFOZZ	5330011858709	34623	12339255	..GASKET..... UOC:AVY,A11,A13,A14,A15,A20,A24,A25, A26,A27,B16,B17,B18,HVY,H11,H13,H14, H15,H16,H17,H18,H20,H21,H24,H25,H26, H27,H28,MMM	1
18	PAOZZ	5310012155356	78553	C8117-1024	.NUT,SHEET SPRING..... UOC:AVY,A11,A13,A14,A15,A20,A24,A25, A26,A27,B16,B17,B18,HVY,H11,H13,H14, H15,H16,H17,H18,H20,H21,H24,H25,H26, H27,H28,MMM	5
19	PAOZZ	5340013327599	19207	12340258	BUTTON,PLUG..... UOC:AVY,A11,A13,A14,A15,A20,A24,A25, A26,A27,B16,B17,B18,HVY,H11,H13,H14, H15,H16,H17,H18,H20,H21,H24,H25,H26, H27,H28,MMM	1
20	PAOZZ	4730009086292	96906	MS35842-14	CLAMP,HOSE..... UOC:AVY,A11,A13,A14,A15,A20,A24,A25, A26,A27,B16,B17,B18,HVY,H11,H13,H14, H15,H16,H17,H18,H20,H21,H24,H25,H26, H27,H28,MMM	2

(1) ITEM NO	(2) SMR CODE	(3) NSN	(4) CAGEC	(5) PART NUMBER	(6) DESCRIPTION AND USABLE ON CODES(UOC)	(7) QTY
21	PAOZZ	4720012795150	19207	12339265-8	DUCT,FLEX..... UOC:AVY,A11,A13,A14,A15,A20,A24,A25, A26,A27,B16,B17,B18,HVY,H11,H13,H14, H15,H16,H17,H18,H20,H21,H24,H25,H26, H27,H28,MMM	1
22	PAOZZ	5310000145850	96906	MS27183-42	WASHER,FLAT #10..... UOC:AVY,A11,A13,A14,A15,A20,A24,A25, A26,A27,B16,B17,B18,HVY,H11,H13,H14, H15,H16,H17,H18,H20,H21,H24,H25,H26, H27,H28,MMM	1
23	PAOZZ	5310012538928	34623	5592995	NUT,PLAIN,EXTENDED #10-24..... UOC:AVY,A11,A13,A14,A15,A20,A24,A25, A26,A27,B16,B17,B18,HVY,H11,H13,H14, H15,H16,H17,H18,H20,H21,H24,H25,H26, H27,H28,MMM	1
24	PAOZZ	4720012716985	19207	12339265-9	HOSE,AIR DUCT..... UOC:AVY,A11,A13,A14,A15,A20,A24,A25, A26,A27,B16,B17,B18,HVY,H11,H13,H14, H15,H16,H17,H18,H20,H21,H24,H25,H26, H27,H28,MMM	1
25	PAOZZ	5305000680502	96906	MS90725-6	SCREW,CAP,HEXAGON H 1/4-20 X 3/4... UOC:AVY,A11,A13,A14,A15,A20,A24,A25, A26,A27,B16,B17,B18,HVY,H11,H13,H14, H15,H16,H17,H18,H20,H21,H24,H25,H26, H27,H28,MMM	2
26	PAOZZ	5310008094058	96906	MS27183-10	WASHER,FLAT 1/4..... UOC:AVY,A11,A13,A14,A15,A20,A24,A25, A26,A27,B16,B17,B18,HVY,H11,H13,H14, H15,H16,H17,H18,H20,H21,H24,H25,H26, H27,H28,MMM	2
27	PFOZZ	2540012125815	19207	12339281	VENTILATOR,AIR CIRC..... UOC:AVY,A11,A13,A14,A15,A20,A24,A25, A26,A27,B16,B17,B18,HVY,H11,H13,H14, H15,H16,H17,H18,H20,H21,H24,H25,H26, H27,H28,MMM	1
28	PAOZZ	5355012473593	34623	5596249	KNOB..... UOC:AVY,A11,A13,A14,A15,A20,A24,A25, A26,A27,B16,B17,B18,HVY,H11,H13,H14, H15,H16,H17,H18,H20,H21,H24,H25,H26, H27,H28,MMM	2
29	PAOZZ	5305004324205	96906	MS51861-49	SCREW,TAPPING #10-16 X 1.00..... UOC:AVY,A11,A13,A14,A15,A20,A24,A25, A26,A27,B16,B17,B18,HVY,H11,H13,H14, H15,H16,H17,H18,H20,H21,H24,H25,H26, H27,H28,MMM	9
30	PAOZZ	4730002782523	19207	11608950-6	CLAMP,HOSE..... UOC:AVY,A11,A13,A14,A15,A20,A24,A25, A26,A27,B16,B17,B18,HVY,H11,H13,H14, H15,H16,H17,H18,H20,H21,H24,H25,H26, H27,H28,MMM	1
31	PAOZZ	4720012795149	34623	12339265-3	HOSE,AIR DUCT..... UOC:AVY,A11,A13,A14,A15,A20,A24,A25, A26,A27,B16,B17,B18,HVY,H11,H13,H14,	1

(1) ITEM NO	(2) SMR CODE	(3) NSN	(4) CAGEC	(5) PART NUMBER	(6) DESCRIPTION AND USABLE ON CODES(UOC)	(7) QTY
					H15,H16,H17,H18,H20,H21,H24,H25,H26, H27,H28,MMM	
32	PAOZZ	4730012550925	34623	5593309	CLAMP,HOSE..... UOC:AVY,A11,A13,A14,A15,A20,A24,A25, A26,A27,B16,B17,B18,HVY,H11,H13,H14, H15,H16,H17,H18,H20,H21,H24,H25,H26, H27,H28,MMM	1
33	PFOZZ	2590011868704	19207	12339252	BRACKET,VEHICULAR C..... UOC:AVY,A11,A13,A14,A15,A20,A24,A25, A26,A27,B16,B17,B18,HVY,H11,H13,H14, H15,H16,H17,H18,H20,H21,H24,H25,H26, H27,H28,MMM	1
34	PAOZZ	5310011947066	72800	C7685-10A	NUT,SHEET SPRING #10-16..... UOC:AVY,A11,A13,A14,A15,A20,A24,A25, A26,A27,B16,B17,B18,HVY,H11,H13,H14, H15,H16,H17,H18,H20,H21,H24,H25,H26, H27,H28,MMM	9
35	PAOZZ	5305000680508	80204	B1821BH025C075N	SCREW,CAP,HEXAGON H 1/4-20 X 3/4... UOC:AVY,A11,A13,A14,A15,A20,A24,A25, A26,A27,B16,B17,B18,HVY,H11,H13,H14, H15,H16,H17,H18,H20,H21,H24,H25,H26, H27,H28,MMM	4
36	PFOZZ	5340012032821	19207	12338725	BRACKET,DOUBLE ANGL..... UOC:AVY,A11,A13,A14,A15,A20,A24,A25, A26,A27,B16,B17,B18,HVY,H11,H13,H14, H15,H16,H17,H18,H20,H21,H24,H25,H26, H27,H28,MMM	2
37	PFOZZ	5340011897554	19207	12339261	BRACKET,ANGLE..... UOC:AVY,A11,A13,A14,A15,A20,A24,A25, A26,A27,B16,B17,B18,HVY,H11,H13,H14, H15,H16,H17,H18,H20,H21,H24,H25,H26, H27,H28,MMM	1

END OF FIGURE

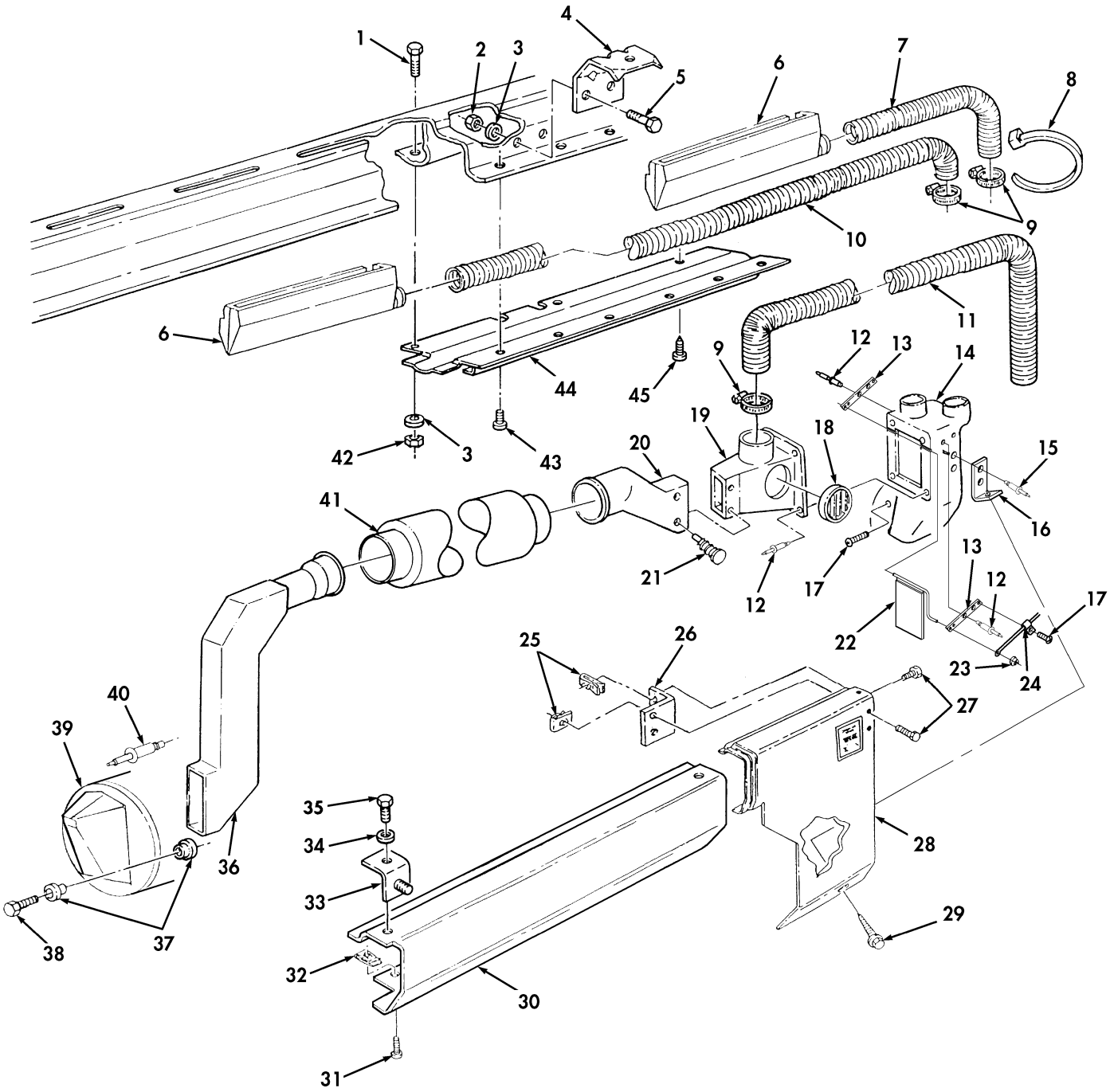

Figure 332. A2 Diverter Assembly, Defroster, Heater Ducting, and Radio Brackets.

(1) ITEM NO	(2) SMR CODE	(3) NSN	(4) CAGEC	(5) PART NUMBER	(6) DESCRIPTION AND USABLE ON CODES(UOC)	(7) QTY
					GROUP 2202 ACCESSORY ITEMS	
					FIG. 332 A2 DIVERTER ASSEMBLY, DEFROSTER,HEATER DUCTING,AND RADIO BRACKETS	
1	PAOZZ	5306012707332	34623	5594178	BOLT,MACHINE 1/4-20 X 7/8..... UOC:BVY,B15,B20,B24,B25,C17,NNN	3
2	PAOZZ	5310014326727	24617	9419471	NUT,SELF-LOCKING,HE 1/4..... UOC:BVY,B15,B20,B24,B25,C17,NNN	4
3	PAOZZ	5310011023270	24617	2436161	WASHER,FLAT 1/4..... UOC:BVY,B15,B20,B24,B25,C17,NNN	7
4	PFOZZ	5340014764374	19207	12446765	BRACKET,DOUBLE ANGL..... UOC:BVY,B15,B20,B24,B25,C17,NNN	2
5	PAOZZ	5305000680508	80204	B1821BH025C075N	SCREW,CAP,HEXAGON H 1/4-20 X 3/4... UOC:BVY,B15,B20,B24,B25,C17,NNN	4
6	PAOZZ	2910011845498	34623	12339292-1	NOZZLE,DEFROSTER R.H. AND L.H..... UOC:BVY,B15,B20,B24,B25,C17,NNN	2
7	PAOZZ	4720014749148	19207	12447010-1	HOSE,AIRDUCT..... UOC:BVY,B15,B20,B24,B25,C17,NNN	1
8	PAOZZ	5975010345871	96906	MS3367-7-0	STRAP,TIEDOWN,ELECT..... UOC:BVY,B15,B20,B24,B25,C17,NNN	1
9	PAOZZ	4730010921904	66295	SIZE 83	CLAMP,HOSE..... UOC:BVY,B15,B20,B24,B25,C17,NNN	3
10	PAOZZ	4720014455690	19207	12447010-3	HOSE,AIR DUCT..... UOC:BVY,B15,B20,B24,B25,C17,NNN	1
11	PAOZZ	4720014446433	34623	12447010-2	HOSE,AIR DUCT..... UOC:BVY,B15,B20,B24,B25,C17,NNN	1
12	PAOZZ	5320012751998	11815	BAPKTR-64	RIVET,BLIND..... UOC:BVY,B15,B20,B24,B25,C17,NNN	8
13	PAOZZ	2590014559123	19207	12460233	BRACKET,VEHICULAR C..... UOC:BVY,B15,B20,B24,B25,C17,NNN	2
14	PAOZZ	2540014472236	34623	12447046	DUCT ASSEMBLY,AIR C..... UOC:BVY,B15,B20,B24,B25,C17,NNN	1
15	PAOZZ	5320000835009	81349	M24243/1-A403	RIVET,BLIND..... UOC:BVY,B15,B20,B24,B25,C17,NNN	2
16	PAOZZ	5340014497352	19207	12447132	BRACKET,ANGLE..... UOC:BVY,B15,B20,B24,B25,C17,NNN	1
17	PAOZZ	5305012135024	86403	9414722	SCREW..... UOC:BVY,B15,B20,B24,B25,C17,NNN	2
18	PAOZZ	2540014559308	19207	12460434	VENTILATOR,AIR CIRC..... UOC:BVY,B15,B20,B24,B25,C17,NNN	1
19	PFOZZ	2540014446615	34623	12447130	DUCT ASSEMBLY,AIR C..... UOC:BVY,B15,B20,B24,B25,C17,NNN	1
20	PAOZZ	2540014445340	34623	12447050	HOUSING,AIR INTAKE,..... UOC:BVY,B15,B20,B24,B25,C17,NNN	1
21	PAOZZ	5325011973460	02768	354-280308-00-00 78	FASTENER,SPRING TEN..... UOC:BVY,B15,B20,B24,B25,C17,NNN	2
22	PAOZZ	2540014446655	34623	12447048	DUCT ASSEMBLY,AIR C..... UOC:BVY,B15,B20,B24,B25,C17,NNN	1
23	PAOZZ	5340013327599	19207	12340258	BUTTON,PLUG..... UOC:BVY,B15,B20,B24,B25,C17,NNN	1
24	PAOZZ	5340009907610	96906	MS21333-66	CLAMP,LOOP.....	1

(1) ITEM NO	(2) SMR CODE	(3) NSN	(4) CAGEC	(5) PART NUMBER	(6) DESCRIPTION AND USABLE ON CODES(UOC)	(7) QTY
					UOC:BVY,B15,B20,B24,B25,C17,NNN	
25	PAOZZ	5310012155356	19207	12339694	NUT,SHEET SPRING.....	4
					UOC:BVY,B15,B20,B24,B25,C17,NNN	
26	PAOZZ	5340011897554	19207	12339261	BRACKET,ANGLE.....	1
					UOC:BVY,B15,B20,B24,B25,C17,NNN	
27	PAOZZ	5305011878757	7X677	274707	SCREW,MACHINE 24 X 1/2.....	4
					UOC:BVY,B15,B20,B24,B25,C17,NNN	
28	PAOZZ	5340014702069	19207	12447013	COVER,ACCESS.....	1
					UOC:BVY,B15,B20,B24,B25,C17,NNN	
29	PAOZZ	5305012596322	34623	12342499-1	SCREW,MACHINE #10 32 X 1/2.....	1
					UOC:BVY,B15,B20,B24,B25,C17,NNN	
30	PAOZZ	2540014446642	34623	12447012	DUCT ASSEMBLY,AIR C.....	1
					UOC:BVY,B15,B20,B24,B25,C17,NNN	
31	PAOZZ	5305014479227	24617	9414726	SCREW,TAPPING.....	10
					UOC:BVY,B15,B20,B24,B25,C17,NNN	
32	PAOZZ	5310014483219	19207	12339426	NUT,SHEET SPRING.....	10
					UOC:BVY,B15,B20,B24,B25,C17,NNN	
33	PAOZZ	2590014398268	34623	12446763	BRACKET,VEHICULAR C.....	2
					UOC:BVY,B15,B20,B24,B25,C17,NNN	
34	PAOZZ	5310000806004	96906	MS27183-14	WASHER,FLAT.....	2
					UOC:BVY,B15,B20,B24,B25,C17,NNN	
35	PAOZZ	5305005434372	80204	B1821BH038C075N	SCREW,CAP,HEXAGON H 3/8-16 X 3/4...	2
					UOC:BVY,B15,B20,B24,B25,C17,NNN	
36	PAOZZ	2540014748562	19207	12447047	HOUSING,HEATING DIR.....	1
					UOC:BVY,B15,B20,B24,B25,C17,NNN	
37	PAOZZ	5365014696343	19207	12460385	SPACER,SLEEVE.....	6
					UOC:BVY,B15,B20,B24,B25,C17,NNN	
38	PAOZZ	5305014614396	3M915	9425170	SCREW,TAPPING #10-24 X 1.00.....	3
					UOC:BVY,B15,B20,B24,B25,C17,NNN	
39	PAOZZ	2540014633097	34623	12460386	DUCT ASSEMBLY,AIR C.....	1
					UOC:BVY,B15,B20,B24,B25,C17,NNN	
40	PAOZZ	5320012542283	11815	BALM-6BP-14	RIVET.....	1
					UOC:BVY,B15,B20,B24,B25,C17,NNN	
41	PAOZZ	4720014455705	19207	12447028	HOSE,AIR DUCT.....	1
					UOC:BVY,B15,B20,B24,B25,C17,NNN	
42	PAOZZ	5310000614650	96906	MS51943-31	NUT,SELF-LOCKING,HE 1/4-20.....	3
					UOC:BVY,B15,B20,B24,B25,C17,NNN	
43	PAOZZ	5305012553588	7X677	164830	SCREW,TAPPING 3/8-16 X 1/2.....	6
					UOC:BVY,B15,B20,B24,B25,C17,NNN	
44	PFOZZ	2510013070152	19207	12339201-1	PANEL,BODY,VEHICULA.....	1
					UOC:BVY,B15,B20,B24,B25,C17,NNN	
45	PAOZZ	5305012982436	96906	MS51861-22C	SCREW,TAPPING 6-20 X 1/4.....	2
					UOC:BVY,B15,B20,B24,B25,C17,NNN	

END OF FIGURE

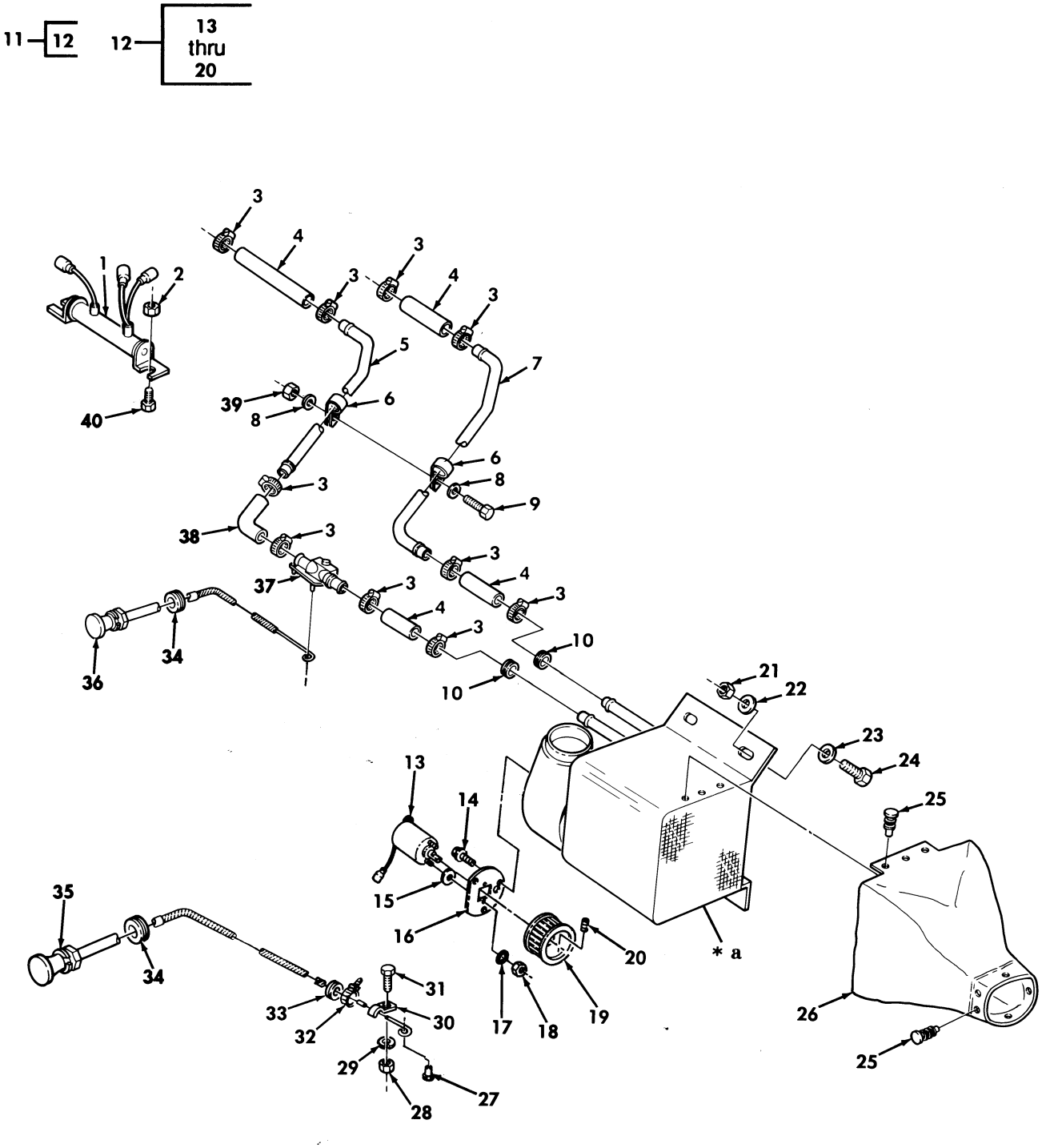

* a PART OF ITEM 11

Figure 333. Heater Assembly, Water Valve, and Controls.

(1) ITEM NO	(2) SMR CODE	(3) NSN	(4) CAGEC	(5) PART NUMBER	(6) DESCRIPTION AND USABLE ON CODES(UOC)	(7) QTY
					GROUP 2202 ACCESSORY ITEMS	
					FIG. 333 HEATER ASSEMBLY,WATER VALVE,AND CONTROLS	
1	PAOZZ	5905011839636	19207	12338468	RESISTOR,FIXED,WIRE.....	1
2	PAOZZ	5310012510711	34623	5593038	NUT,PLAIN,HEXAGON 1/4-20.....	2
3	PAOZZ	4730010887798	76599	4816SS-305	CLAMP,HOSE.....	10
4	MFOZZ		19207	12339293-1	TUBE,BENT,NONMETALL MAKE FROM HOSE, P/N C110-10,4 INCHES LONG.....	4
5	PAOZZ	4710012103504	19207	12339263	TUBE,BENT,METALLIC.....	1
6	PFOZZ	5340012143615	21450	137197	CLAMP,LOOP.....	2
7	PAOZZ	4710012103503	34623	5590284	TUBE,BENT,METALLIC.....	1
8	PAOZZ	5310011023270	24617	2436161	WASHER,FLAT 1/4.....	2
9	PAOZZ	5305000680502	96906	MS90725-6	SCREW,CAP,HEXAGON H 1/4-20 X 3/4...	1
10	PAOZZ	5325002811557	70485	AN931-10-14	GROMMET,NONMETALLIC.....	2
11	PFOOO	2540011907079	92878	30250	HEATER,VEHICULAR,CO.....	1
12	PAOOO	6105012116635	92878	30266	.MOTOR,DIRECT CURREN.....	1
13	PAOZZ	6105005129225	92878	30040-01	..MOTOR,DIRECT CURREN.....	1
14	PAOZZ	5305013809163	24617	9414313	..SCREW,ASSEMBLED WAS 1/4-20 X 11/32.....	2
15	PAOZZ	5310000145850	96906	MS27183-42	..WASHER,FLAT #10.....	2
16	PFOZZ	5340013812248	19207	12342809	..PLATE,MOUNTING.....	1
17	PAOZZ	5310005765752	96906	MS35333-39	..WASHER,LOCK #10.....	2
18	PAOZZ	5310009349751	96906	MS35650-302	..NUT,PLAIN,HEXAGON #10-32.....	2
19	PAOZZ	2930013859108	19207	12342808	..IMPELLER,FAN,AXIAL.....	1
20	PAOZZ	5305007245812	80205	MS51964-65	..SETSCREW 1/4-28 X .312.....	1
21	PAOZZ	5310008140673	96906	MS51943-33	NUT,SELF-LOCKING,HE 5/16-18.....	4
22	PAOZZ	5310012520512	34623	5592832	WASHER,FLAT 5/16.....	4
23	PAOZZ	5310000814219	96906	MS27183-12	WASHER,FLAT 5/16.....	4
24	PAOZZ	5306002258499	96906	MS90725-34	BOLT,MACHINE 5/16-18 X 3/4.....	4
25	PFOZZ	5325012097843	19207	12339402	GROMMET,NONMETALLIC 1/4 X 5/8.....	16
26	PAOZZ	4720012126403	19207	12340029	DUCT,AIR INTAKE.....	1
27	PAOZZ	5310011981723	19207	12339998-14	NUT,PLAIN,BLIND RIV.....	1
28	PAOZZ	5310009349747	96906	MS35649-262	NUT,PLAIN,HEXAGON #6-32.....	1
29	PAOZZ	5310000454007	96906	MS35338-41	WASHER,LOCK #6.....	1
30	PAOZZ	5340012155478	75272	CWV-0407	CLAMP,LOOP.....	1
31	PAOZZ	5305002271543	96906	MS51849-33	SCREW,MACHINE #6-32 X .62.....	1
32	PAOZZ	5975012055379	96906	MS3367-7	STRAP,TIEDOWN,ELECT.....	1
33	PAOZZ	5325002496345	70485	2758	GROMMET,NONMETALLIC.....	1
34	PAOZZ	5325002919366	96906	MS35489-11	GROMMET,NONMETALLIC.....	2
35	PAOZZ	2590011946990	19207	12340531-3	CONTROL ASSEMBLY,PU DEFROSTER.....	1
36	PAOZZ	2590012124956	19207	12340531-4	CONTROL ASSEMBLY,PU HEATER.....	1
37	PAOZZ	4820011892107	58261	RTCO-2619	VALVE,STOP-CHECK.....	1
38	PAOZZ	4720011892218	19207	12339251	HOSE,PREFORMED.....	1
39	PAOZZ	5310000614650	96906	MS51943-31	NUT,SELF-LOCKING,HE 1/4-20.....	1
40	PAOZZ	5305012685680	34623	5593030	SCREW,ASSEMBLED WAS 1/4-20 X 5/8...	2

END OF FIGURE

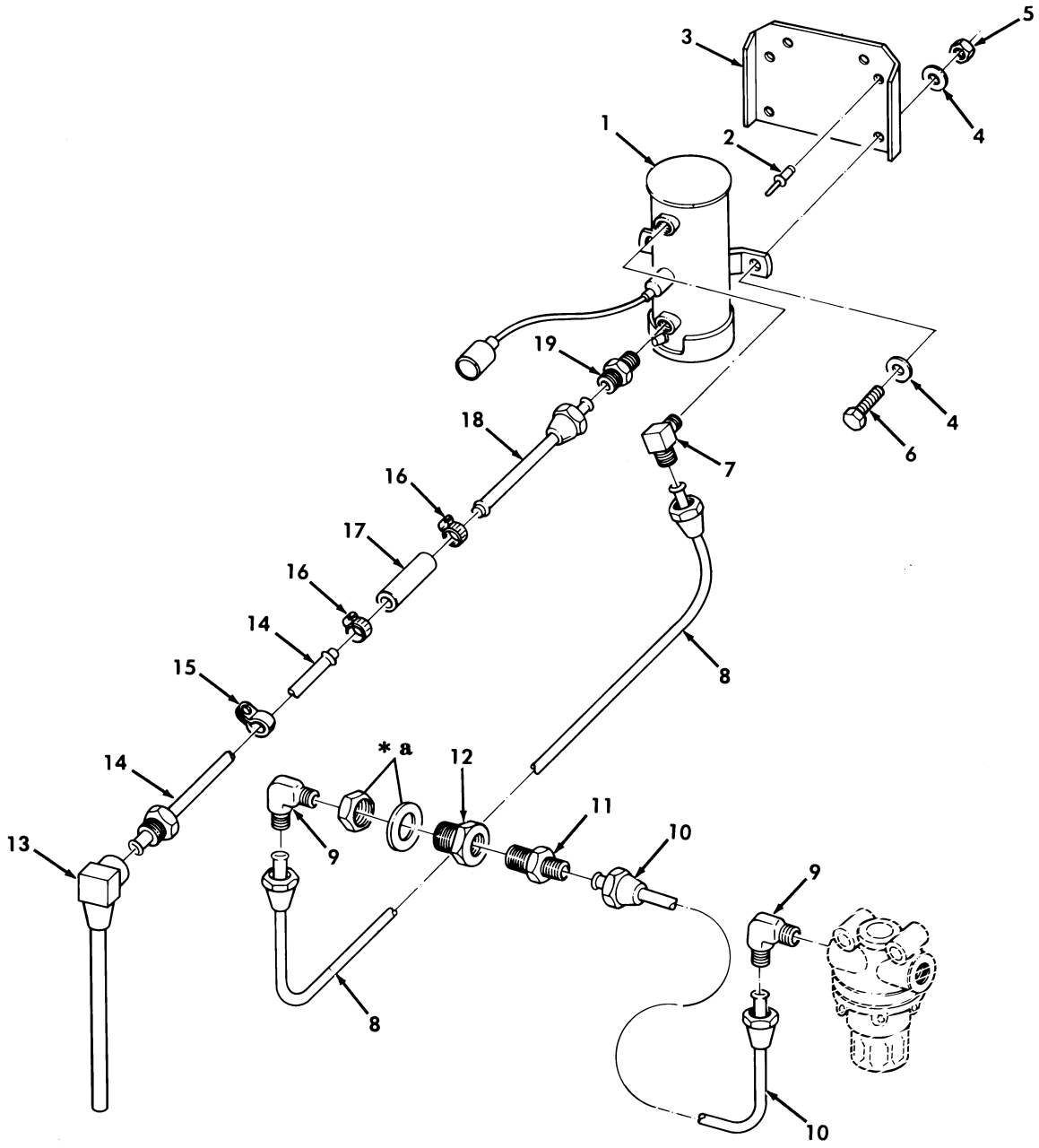

* a PART OF ITEM 12

Figure 334. Heater Fuel Lines, Filter to Tank, M996, M996A1, M997A1, and M997A2 Ambulance.

(1) ITEM NO	(2) SMR CODE	(3) NSN	(4) CAGEC	(5) PART NUMBER	(6) DESCRIPTION AND USABLE ON CODES(UOC)	(7) QTY
					GROUP 2202 ACCESSORY ITEMS	
					FIG. 334 HEATER FUEL LINES,FILTER TO TANK,M996,M996A1,M997,M997A1,AND M997A2 AMBULANCE	
1	PAOZZ	2910000730165	19207	7748814	PUMP,FUEL,ELECTRICA..... UOC:A15,B15,B16,H15,H16	1
2	PAOZZ	5320012716357	9K475	MGLP-B6-4	RIVET,BLIND 3/16..... UOC:A15,B15,B16,H15,H16	4
3	PFOZZ	5340012043903	19207	12338559	BRACKET,DOUBLE ANGL..... UOC:A15,B15,B16,H15,H16	1
4	PAOZZ	5310012510748	34623	5593691	WASHER,FLAT 1/4..... UOC:A15,B15,B16,H15,H16	4
5	PAOZZ	5310000614650	96906	MS51943-31	NUT,SELF-LOCKING,HE 1/4 X 20..... UOC:A15,B15,B16,H15,H16	2
6	PAOZZ	5305002253843	80204	B1821BH025C100N	SCREW,CAP,HEXAGON H 1/4-20 X 1.00.. UOC:A15,B15,B16,H15,H16	2
7	PAOZZ	4730002546227	79470	49X6X2	ELBOW,PIPE TO TUBE..... UOC:A15,B15,B16,H15,H16	1
8	PAOZZ	4710012653231	34623	5591614	TUBE ASSEMBLY,METAL..... UOC:A15,B15,B16,H15,H16	1
9	PAOZZ	4730002546211	30327	E14A	ELBOW,PIPE TO TUBE 90 DEGREE..... UOC:A15,B15,B16,H15,H16	2
10	PAOZZ	4710012653275	19207	12341440	TUBE ASSEMBLY,METAL..... UOC:A15,B15,B16,H15,H16	1
11	PAOZZ	4730008036266	72582	8924145	ADAPTER,STRAIGHT,PI..... UOC:A15,B15,B16,H15,H16	1
12	PAOZZ	4730008975497	79470	W21204	COUPLING,PIPE..... UOC:A15,B15,B16,H15,H16	1
13	PAOZZ	4710012030615	34623	5578694	TUBE ASSEMBLY,METAL..... UOC:A15,B15,B16,H15,H16	1
14	PAOZZ	4710012030607	34623	5588694	TUBE ASSEMBLY,METAL..... UOC:A15,B15,B16,H15,H16	1
15	PAOZZ	5340009936207	96906	MS21333-99	CLAMP,LOOP..... UOC:A15,B15,B16,H15,H16	1
16	PAOZZ	4730011188278	76599	MMF4-SS	CLAMP,HOSE..... UOC:A15,B15,B16,H15,H16	2
17	MOOZZ		34623	5588698	HOSE MAKE FROM HOSE,P/N GM-6165-M, 2.80 INCHES LONG..... UOC:A15,B15,B16,H15,H16	1
18	PAOZZ	4710012030608	34623	5588696	TUBE ASSEMBLY,METAL..... UOC:A15,B15,B16,H15,H16	1
19	PAOZZ	4730002660535	81343	5-2 010102B	ADAPTER,STRAIGHT,PI..... UOC:A15,B15,B16,H15,H16	1

END OF FIGURE

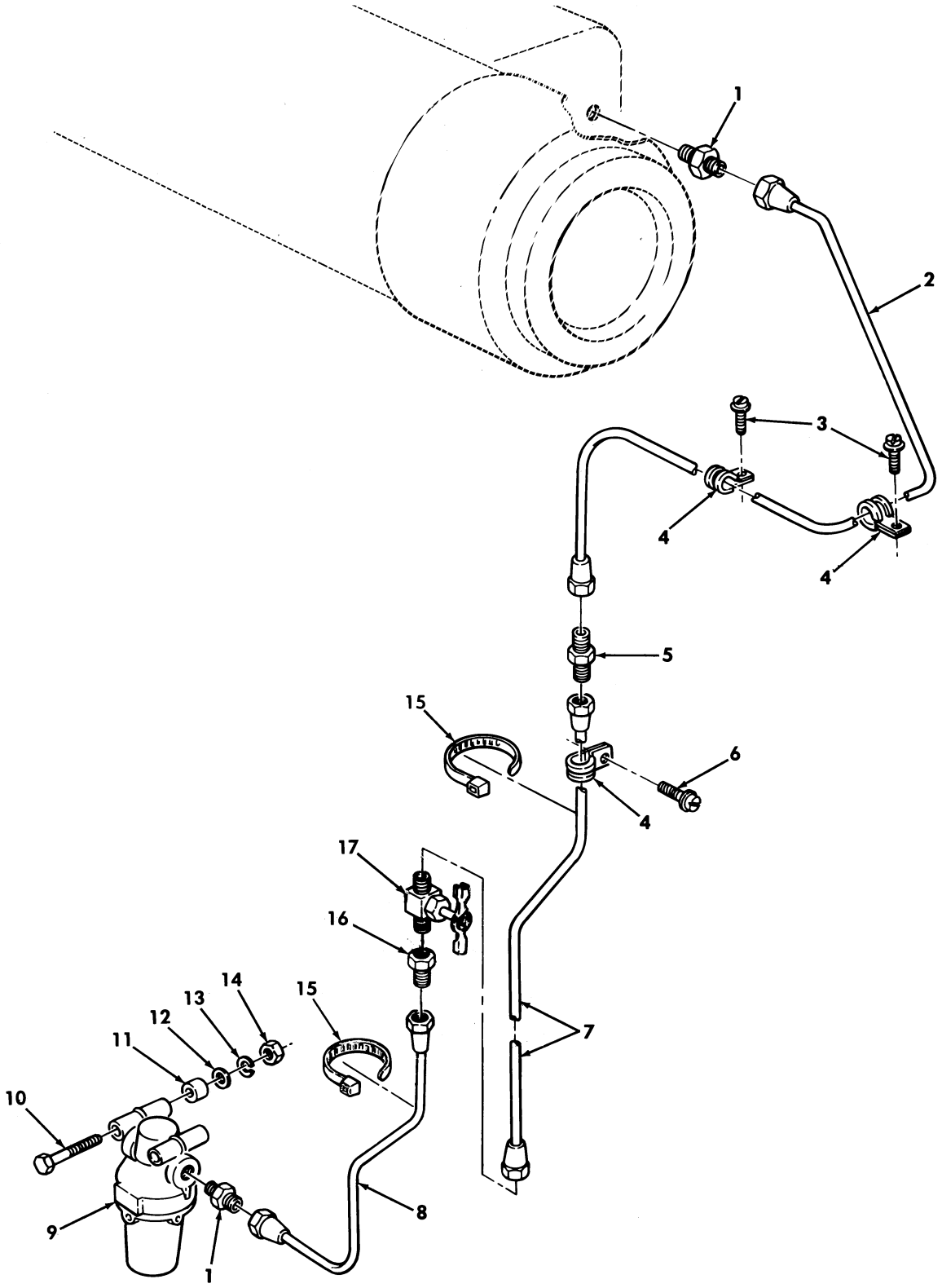

Figure 335. Fuel Lines, Personnel Heater to Fuel Filter, M996 and M996A1 Ambulance.

(1) ITEM NO	(2) SMR CODE	(3) NSN	(4) CAGEC	(5) PART NUMBER	(6) DESCRIPTION AND USABLE ON CODES(UOC)	(7) QTY
					GROUP 2202 ACCESSORY ITEMS	
					FIG. 335 FUEL LINES,PERSONNEL HEATER TO FUEL FILTER,M996 AND M996A1 AMBULANCE	
1	PAOZZ	4730004396021	81343	6-2 010102B	ADAPTER,STRAIGHT,PI..... UOC:B16,H16	2
2	PAOZZ	4710012653228	34623	5598266	TUBE ASSEMBLY,METAL..... UOC:B16,H16	1
3	PAOZZ	5305012596322	34623	12342499-1	SCREW,MACHINE #10-32 X .50..... UOC:B16,H16	2
4	PAOZZ	5340007647051	96906	MS21333-69	CLAMP,LOOP..... UOC:B16,H16	3
5	PAOZZ	4730009498694	41947	A-327	NIPPLE,TUBE..... UOC:B16,H16	1
6	PAOZZ	5305012046502	78189	112-1008800-003	SCREW #10-32 X .62..... UOC:B16,H16	1
7	PAOZZ	4710012653229	34623	12341420	TUBE ASSEMBLY,METAL..... UOC:B16,H16	1
8	PAOZZ	4710012653228	34623	5598266	TUBE ASSEMBLY,METAL..... UOC:B16,H16	1
9	PAOZZ	2910000253493	96906	MS51085-1	FILTER,FLUID..... UOC:B16,H16	1
10	PAOZZ	5305012705435	34623	5593421	SCREW,CAP,HEXAGON H #10-24 X 2.00.. UOC:B16,H16	2
11	PFOZZ	5365012727504	34623	5596814	SPACER,SLEEVE..... UOC:B16,H16	2
12	PAOZZ	5310012538953	34623	5593242	WASHER,FLAT #10..... UOC:B16,H16	2
13	PAOZZ	5310000453296	96906	MS35338-43	WASHER,LOCK #10..... UOC:B16,H16	2
14	PAOZZ	5310009349758	96906	MS35649-202	NUT,PLAIN,HEXAGON #10-24..... UOC:B16,H16	2
15	PAOZZ	5975009856630	96906	MS3367-3-0	STRAP,TIEDOWN,ELECT..... UOC:B16,H16	2
16	PAOZZ	4730002704606	81343	6-4 010103B	ADAPTER,STRAIGHT,PI..... UOC:B16,H16	1
17	PAOZZ	4820002875627	19207	12341793	COCK,SHUTOFF,SCREW..... UOC:B16,H16	1

END OF FIGURE

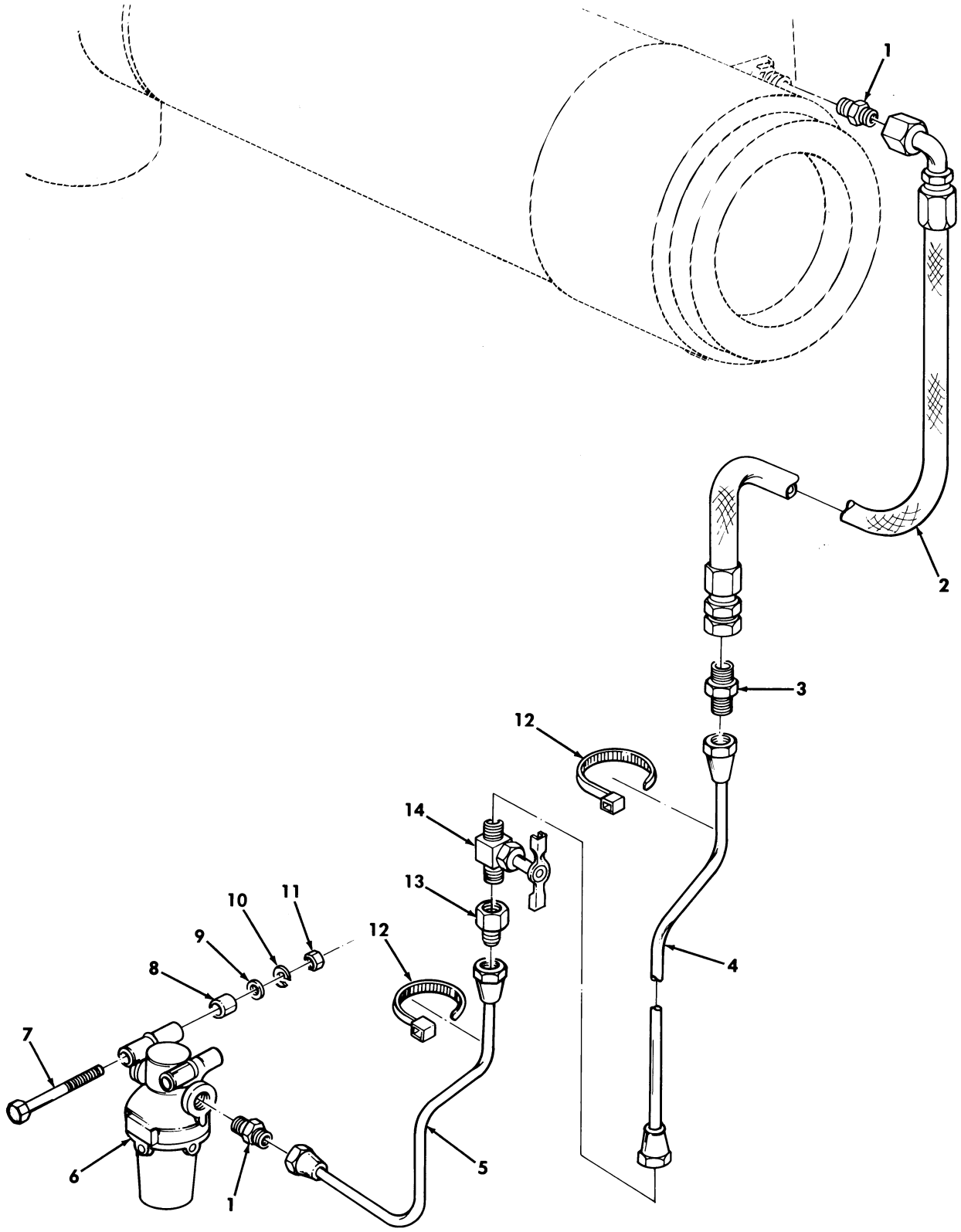

Figure 336. Fuel Lines, Personnel Heater to Fuel Filter, M997, M997A1, and M997A2 Ambulance.

(1) ITEM NO	(2) SMR CODE	(3) NSN	(4) CAGEC	(5) PART NUMBER	(6) DESCRIPTION AND USABLE ON CODES(UOC)	(7) QTY
					GROUP 2202 ACCESSORY ITEMS	
					FIG. 336 FUEL LINES,PERSONNEL HEATER TO FUEL FILTER,M997,M997A1,AND M997A2 AMBULANCE	
1	PAOZZ	4730012699530	24617	190652	ADAPTER,STRAIGHT,PI..... UOC:A15,B15,H15	2
2	PAOZZ	4720012653213	24234	403475	HOSE ASSEMBLY,METAL..... UOC:A15,B15,H15	1
3	PAOZZ	4730009498694	41947	A-327	NIPPLE,TUBE 3/8..... UOC:A15,B15,H15	1
4	PAOZZ	4710012653229	34623	12341420	TUBE ASSEMBLY,METAL..... UOC:A15,B15,H15	1
5	PAOZZ	4710012653228	34623	5598266	TUBE ASSEMBLY,METAL..... UOC:A15,B15,H15	1
6	PAOZZ	2910000253493	96906	MS51085-1	FILTER,FLUID..... UOC:A15,B15,H15	1
7	PAOZZ	5305012705435	34623	5593421	SCREW,CAP,HEXAGON H #10-24 X 2.00.. UOC:A15,B15,H15	2
8	PAOZZ	5365012727504	34623	5596814	SPACER,SLEEVE..... UOC:A15,B15,H15	2
9	PAOZZ	5310012538953	34623	5593242	WASHER,FLAT #10..... UOC:A15,B15,H15	2
10	PAOZZ	5310000453296	96906	MS35338-43	WASHER,LOCK #10..... UOC:A15,B15,H15	2
11	PAOZZ	5310009349758	96906	MS35649-202	NUT,PLAIN,HEXAGON #10-24..... UOC:A15,B15,H15	2
12	PAOZZ	5975009856630	96906	MS3367-3-0	STRAP,TIEDOWN,ELECT..... UOC:A15,B15,H15	4
13	PAOZZ	4730002704606	81343	6-4 010103B	ADAPTER,STRAIGHT,PI..... UOC:A15,B15,H15	1
14	PAOZZ	4820002875627	34623	5598272	COCK,SHUTOFF,SCREW..... UOC:A15,B15,H15	1

END OF FIGURE

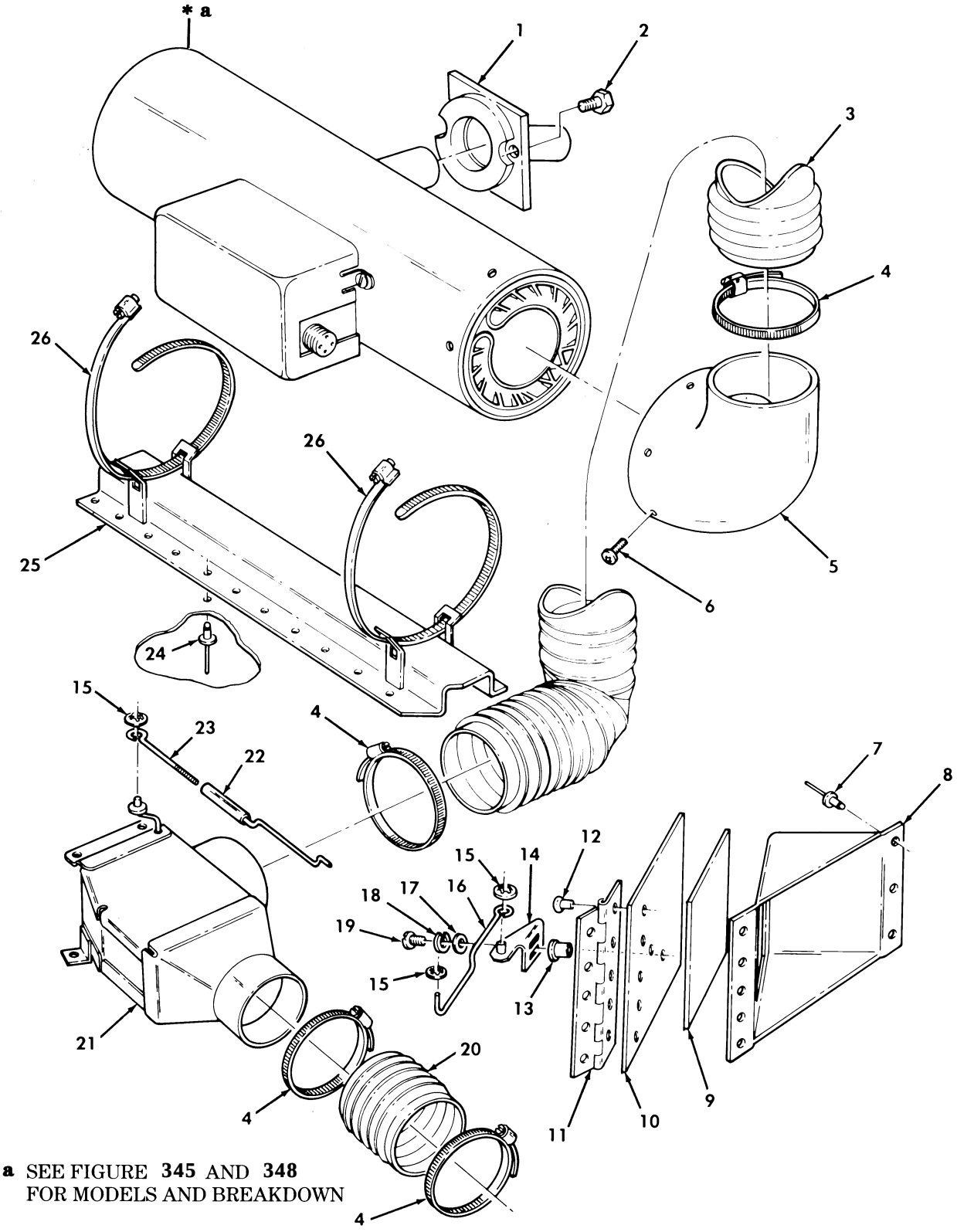

Figure 337. Personnel Heater Assembly and Attaching Hardware, M996 and M996A1 Ambulance.

(1) ITEM NO	(2) SMR CODE	(3) NSN	(4) CAGEC	(5) PART NUMBER	(6) DESCRIPTION AND USABLE ON CODES(UOC)	(7) QTY
					GROUP 2202 ACCESSORY ITEMS	
					FIG. 337 PERSONNEL HEATER ASSEMBLY AND ATTACHING HARDWARE,M996 AND M996A1 AMBULANCE	
1	PFOZZ	2990012696625	34623	5598002	SHIELD ASSEMBLY,HEA..... UOC:B16,H16	1
2	PAOZZ	5305005434709	28839	10-35936-7	SCREW,ASSEMBLED WAS..... UOC:B16,H16	2
3	XBOZZ		19207	12339265-12	TUBING,NONMETALLIC..... UOC:B16,H16	1
4	PAOZZ	4730012969318	19207	11608950-18	CLAMP,HOSE..... UOC:B16,H16	4
5	PFOZZ	4730012975111	19207	12341883	ELBOW,PIPE..... UOC:B16,H16	1
6	PAOZZ	5305009846195	96906	MS35206-247	SCREW,MACHINE..... UOC:B16,H16	3
7	PAOZZ	5320002758344	90030	AD45BS	RIVET,BLIND 1/8..... UOC:B16,H16	8
8	PFOZZ	2940012905014	34623	12341662	DEFLECTOR,AIR CLEAN..... UOC:B16,H16	1
9	PAOZZ	5330012902709	19207	12341657	GASKET..... UOC:B16,H16	1
10	PFOZZ	5340012893231	34623	5598253	COVER,ACCESS..... UOC:B16,H16	1
11	PFOZZ	5340012902761	34623	5598256-C	HINGE,BUTT..... UOC:B16,H16	1
12	PAOZZ	5320008990981	54402	AD42BS	RIVET,BLIND..... UOC:B16,H16	5
13	PAOZZ	5310010099785	96906	MS27130-20	NUT,PLAIN,BLIND RIV #10-32..... UOC:B16,H16	2
14	PAOZZ	5340012902263	34623	5598250-B	BRACKET,ANGLE..... UOC:B16,H16	1
15	PAOZZ	5310013270387	19207	12341800	WASHER,LOCK..... UOC:B16,H16	3
16	PFOZZ	3040012906758	34623	5598247	CONNECTING LINK,RIG..... UOC:B16,H16	1
17	PAOZZ	5310000145850	96906	MS27183-42	WASHER,FLAT #10..... UOC:B16,H16	2
18	PAOZZ	5310000453296	96906	MS35338-43	WASHER,LOCK #10..... UOC:B16,H16	2
19	PAOZZ	5305009897435	96906	MS35207-264	SCREW,MACHINE #10-32 X .625..... UOC:B16,H16	2
20	PFOZZ	4720012998469	16632	FLX400132057600	HOSE,AIR DUCT 4.50 INCHES LONG..... UOC:B16,H16	1
21	PFOZZ	2540012703776	19207	12341227	DIVERTER BOX,HEATER..... UOC:B16,H16	1
22	PFOZZ	3040012906757	34623	5598309	CONNECTING LINK,RIG..... UOC:B16,H16	1
23	PFOZZ	3040012906760	34623	5598310	CONNECTING LINK,RIG..... UOC:B16,H16	1
24	PAOZZ	5320012544251	34623	5593050	RIVET,BLIND.....	22

(1) ITEM NO	(2) SMR CODE	(3) NSN	(4) CAGEC	(5) PART NUMBER	(6) DESCRIPTION AND USABLE ON CODES(UOC)	(7) QTY
					UOC:B16,H16	
25	PFOZZ	5365012805875	34623	5597035	SPACER,PLATE.....	1
					UOC:B16,H16	
26	PAOZZ	4730009086294	76599	96HSS	CLAMP,HOSE.....	2
					UOC:B16,H16	

END OF FIGURE

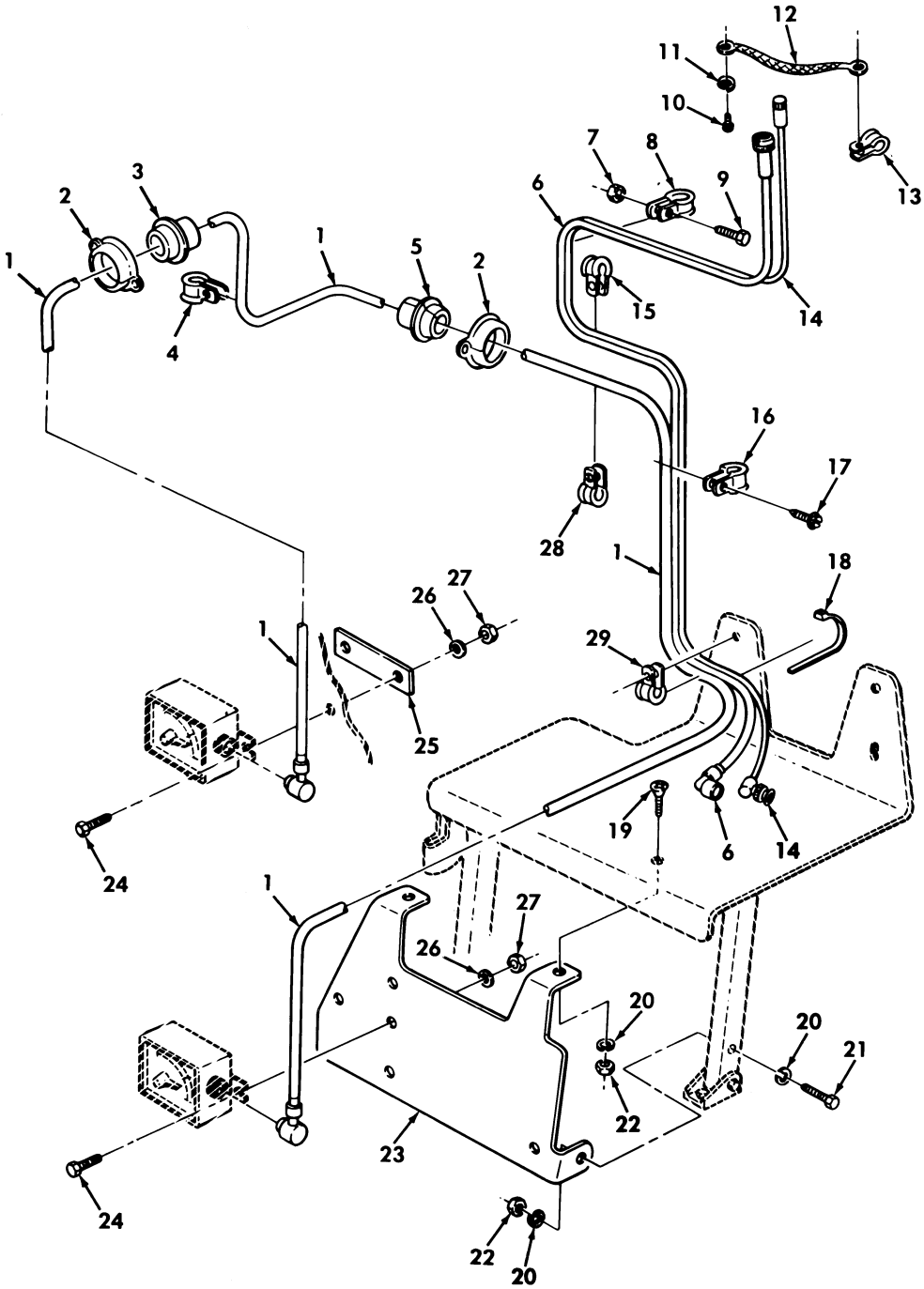

Figure 338. Antenna and Intercom Cables and Mounting Hardware, M997, M997A1, and M997A2 Ambulance.

(1) ITEM NO	(2) SMR CODE	(3) NSN	(4) CAGEC	(5) PART NUMBER	(6) DESCRIPTION AND USABLE ON CODES(UOC)	(7) QTY
					GROUP 2202 ACCESSORY ITEMS	
					FIG. 338 ANTENNA AND INTERCOM CABLES AND MOUNTING HARDWARE,M997,M997A1, AND M997A2 AMBULANCE	
1	PAOZZ	6150012691849	19207	12338100-2	CABLE ASSEMBLY,SPEC..... UOC:A15,B15,H15	1
2	PFOZZ	2590004543620	34623	809223	RETAINER,ASSEMBLY..... UOC:A15,B15,H15	2
3	PAOZZ	5365012734690	19207	12341231-1	BUSHING,NONMETALLIC..... UOC:A15,B15,H15	1
4	PAOZZ	5340009588457	96906	MS21333-78	CLAMP,LOOP..... UOC:A15,B15,H15	4
5	PAOZZ	5365012744674	19207	12341848	BUSHING,NONMETALLIC..... UOC:A15,B15,H15	1
6	PAOZZ	6150012691848	19207	12338089-2	CABLE ASSEMBLY,SPEC..... UOC:A15,B15,H15	1
7	PAOZZ	5310012510726	34623	5593053	NUT,SELF-LOCKING,HE #10-32..... UOC:A15,B15,H15	1
8	PAOZZ	5340000572904	96906	MS21333-71	CLAMP,LOOP..... UOC:A15,B15,H15	1
9	PAOZZ	5305009897435	96906	MS35207-264	SCREW,MACHINE #10-32 X .62..... UOC:A15,B15,H15	1
10	PAOZZ	5305009897434	96906	MS35207-263	SCREW,MACHINE #10-32 X .50..... UOC:A15,B15,H15	1
11	PAOZZ	5310000453296	96906	MS35338-43	WASHER,LOCK #10..... UOC:A15,B15,H15	1
12	PAOZZ	5999012720018	34623	5598121	STRIP,ELECTRICAL GR..... UOC:A15,B15,H15	1
13	PAOZZ	5340009891771	96906	MS21333-123	CLAMP,LOOP..... UOC:A15,B15,H15	1
14	PAOZZ	5995012699525	19207	12338086-2	CABLE ASSEMBLY,RADI..... UOC:A15,B15,H15	1
15	PAOZZ	5340009848540	96906	MS21333-102	CLAMP,LOOP..... UOC:A15,B15,H15	1
16	PAOZZ	5340000502740	96906	MS21333-75	CLAMP,LOOP..... UOC:A15,B15,H15	3
17	PAOZZ	5305012596322	34623	12342499-1	SCREW,MACHINE #10-32 X 1/2..... UOC:A15,B15,H15	3
18	PAOZZ	5975009856630	96906	MS3367-3-0	STRAP,TIEDOWN,ELECT..... UOC:A15,B15,H15	2
19	PAOZZ	5305009585246	80205	MS35190-289	SCREW,MACHINE 1/4-20 X .75..... UOC:A15,B15,H15	2
20	PAOZZ	5310012510748	34623	5593691	WASHER,FLAT 1/4..... UOC:A15,B15,H15	6
21	PAOZZ	5305000712237	96906	MS90725-14	SCREW,CAP,HEXAGON H 1/4-20 X 2.00.. UOC:A15,B15,H15	2
22	PAOZZ	5310000614650	96906	MS51943-31	NUT,SELF-LOCKING,HE 1/4-20..... UOC:A15,B15,H15	4
23	PAOZZ	5340012708489	19207	12340879	BRACKET,MOUNTING..... UOC:A15,B15,H15	1
24	PAOZZ	5306002264835	80204	B1821BH031C250N	BOLT,MACHINE 5/16-18 X 2.50.....	4

(1) ITEM NO	(2) SMR CODE	(3) NSN	(4) CAGEC	(5) PART NUMBER	(6) DESCRIPTION AND USABLE ON CODES(UOC)	(7) QTY
					UOC:A15,B15,H15	
25	PAOZZ	5340012708490	34623	5597899	SPACER,PLATE.....	1
					UOC:A15,B15,H15	
26	PAOZZ	5310011191024	24617	2436162	WASHER,FLAT 5/16.....	4
					UOC:A15,B15,H15	
27	PAOZZ	5310012531615	34623	5592958	NUT,SELF-LOCKING,HE 5/16-18.....	4
					UOC:A15,B15,H15	
28	PAOZZ	5340009226300	96906	MS21333-77	CLAMP,LOOP.....	3
					UOC:A15,B15,H15	
29	PAOZZ	5340008091494	96906	MS21333-105	CLAMP,LOOP.....	2
					UOC:A15,B15,H15	

END OF FIGURE

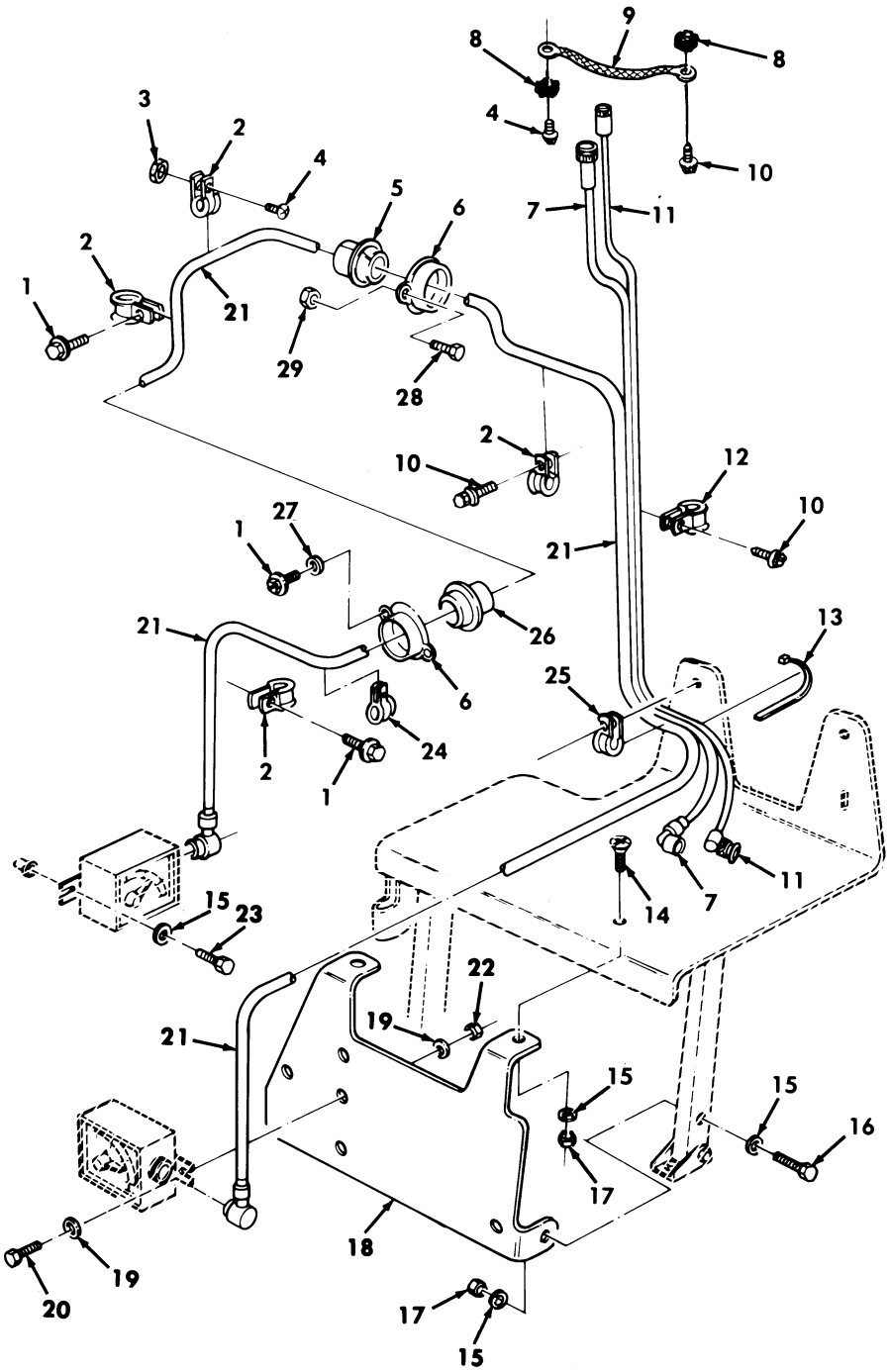

Figure 339. Antenna and Intercom Cables and Mounting Hardware, M996 and M996A1 Ambulance.

(1) ITEM NO	(2) SMR CODE	(3) NSN	(4) CAGEC	(5) PART NUMBER	(6) DESCRIPTION AND USABLE ON CODES(UOC)	(7) QTY
					GROUP 2202 ACCESSORY ITEMS	
					FIG. 339 ANTENNA AND INTERCOM CABLES AND MOUNTING HARDWARE,M996 AND M996A1 AMBULANCE	
1	PAOZZ	5305012729042	34623	5593409	SCREW,CAP,HEXAGON H 1/4-20 X 1.25.. UOC:B16,H16	6
2	PAOZZ	5340000572904	96906	MS21333-71	CLAMP,LOOP..... UOC:B16,H16	8
3	PAOZZ	5310012708189	24617	271168	NUT PLAIN,ASSEMBLED #10-32..... UOC:B16,H16	2
4	PAOZZ	5305000593659	96906	MS51958-63	SCREW,MACHINE #10-32 X .50..... UOC:B16,H16	3
5	PAOZZ	5325012055378	19207	12338084	GROMMET..... UOC:B16,H16	1
6	PFOZZ	2590004543620	34623	809223	RETAINER,ASSEMBLY..... UOC:B15,H15	2
7	PAOZZ	6150012691848	19207	12338089-2	CABLE ASSEMBLY,SPEC..... UOC:B16,H16	1
8	PAOZZ	5310000809786	96906	MS45904-60	WASHER,LOCK #10..... UOC:B16,H16	2
9	PAOZZ	5999012720018	34623	5598121	STRIP,ELECTRICAL GR..... UOC:B16,H15,H16	1
10	PAOZZ	5305012596322	34623	12342499-1	SCREW,MACHINE #10-32 X 3/4..... UOC:B16,H16	6
11	PAOZZ	5995012699525	34623	5589012-B	CABLE ASSEMBLY,RADI..... UOC:B16,H16	1
12	PAOZZ	5340000502740	96906	MS21333-75	CLAMP,LOOP..... UOC:B16,H16	3
13	PAOZZ	5975012055379	96906	MS3367-7	STRAP,TIEDOWN,ELECT..... UOC:B16,H16	2
14	PAOZZ	5305007195021	96906	MS51959-81	SCREW,MACHINE 1/4-20 X .75..... UOC:B16,H16	2
15	PAOZZ	5310012510748	34623	5593691	WASHER,FLAT 1/4..... UOC:B16,H16	8
16	PAOZZ	5305000712237	96906	MS90725-14	SCREW,CAP,HEXAGON H 1/4-20 X 2.00.. UOC:B16,H16	2
17	PAOZZ	5310000614650	96906	MS51943-31	NUT,SELF-LOCKING,HE 1/4-20..... UOC:B16,H16	4
18	PFOZZ	5340012708489	19207	12340879	BRACKET,MOUNTING..... UOC:B16,H16	1
19	PAOZZ	5310012520512	34623	5592832	WASHER,FLAT 5/16..... UOC:B16,H16	4
20	PAOZZ	5306002258499	96906	MS90725-34	BOLT,MACHINE 5/16-18 X 1.00..... UOC:B16,H16	2
21	PAOZZ	6150012691839	19207	12338100-1	CABLE ASSEMBLY,SPEC..... UOC:B16,H16	1
22	PAOZZ	5310008140673	96906	MS51943-33	NUT,SELF-LOCKING,HE 5/16-18..... UOC:B16,H16	2
23	PAOZZ	5305012729034	34623	G0045696	SCREW,ASSEMBLED WAS 1/4-20 X 1.25.. UOC:B16,H16	2
24	PAOZZ	5340009848540	96906	MS21333-102	CLAMP,LOOP.....	1

(1) ITEM NO	(2) SMR CODE	(3) NSN	(4) CAGEC	(5) PART NUMBER	(6) DESCRIPTION AND USABLE ON CODES(UOC)	(7) QTY
					UOC:B16,H16	
25	PAOZZ	5340008091494	96906	MS21333-105	CLAMP,LOOP.....	2
					UOC:B16,H16	
26	PAOZZ	5365012743573	19207	12341231-3	BUSHING,NONMETALLIC.....	1
					UOC:B16,H16	
27	PAOZZ	5310000145850	96906	MS27183-42	WASHER,FLAT #10.....	2
					UOC:B16,H16	
28	PAOZZ	5305002253843	80204	B1821BH025C100N	SCREW,CAP,HEXAGON H 1/4-20 X 1.00..	2
					UOC:B16,H16	
29	PAOZZ	5310012538380	34623	5592818	NUT 1/4-20.....	2
					UOC:B16,H16	

END OF FIGURE

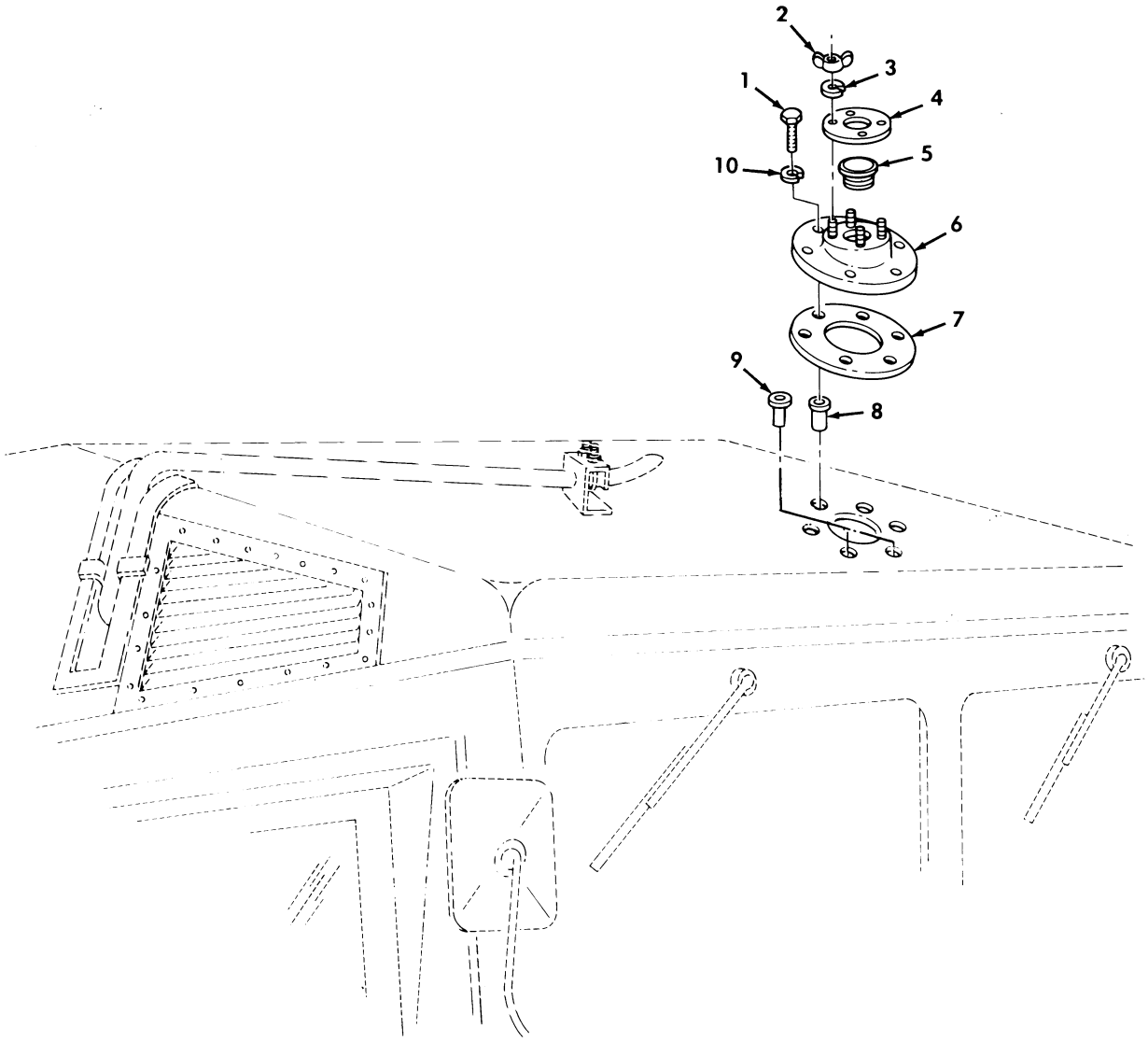

Figure 340. Antenna Mount and Mounting Hardware, M996 and M996A1 Ambulance.

(1) ITEM NO	(2) SMR CODE	(3) NSN	(4) CAGEC	(5) PART NUMBER	(6) DESCRIPTION AND USABLE ON CODES(UOC)	(7) QTY
					GROUP 2202 ACCESSORY ITEMS	
					FIG. 340 ANTENNA MOUNT AND MOUNTING HARDWARE,M996 AND M996A1 AMBULANCE	
1	PAOZZ	5306002264828	80204	B1821BH031C113N	BOLT,MACHINE 5/16-18 X 1.125..... UOC:B16,H16	6
2	PAOZZ	5310010882490	96906	MS35425-74	NUT,PLAIN,WING..... UOC:B16,H16	4
3	PAOZZ	5310006379541	96906	MS35338-46	WASHER,LOCK..... UOC:B16,H16	4
4	PAOZZ	5330012708315	19207	12341876	GASKET..... UOC:B16,H16	1
5	PAOZZ	5340011940887	99017	BPF-3-1/2	PLUG,PROTECTIVE,DUS..... UOC:B16,H16	1
6	PAOZZ	5985012698272	19207	12341466	BASE,ANTENNA SUPPOR..... UOC:B16,H16	1
7	PAOZZ	5330012988127	34623	5597985	GASKET..... UOC:B16,H16	1
8	PAOZZ	5310011016046	96906	MS27130-A50	NUT,PLAIN,BLIND RIV..... UOC:B16,H16	4
9	PAOZZ	5310010465382	96906	MS27130-A43	NUT,PLAIN,BLIND RIV..... UOC:B16,H16	2
10	PAOZZ	5310004079566	96906	MS35338-45	WASHER,LOCK 5/16..... UOC:B16,H16	6

END OF FIGURE

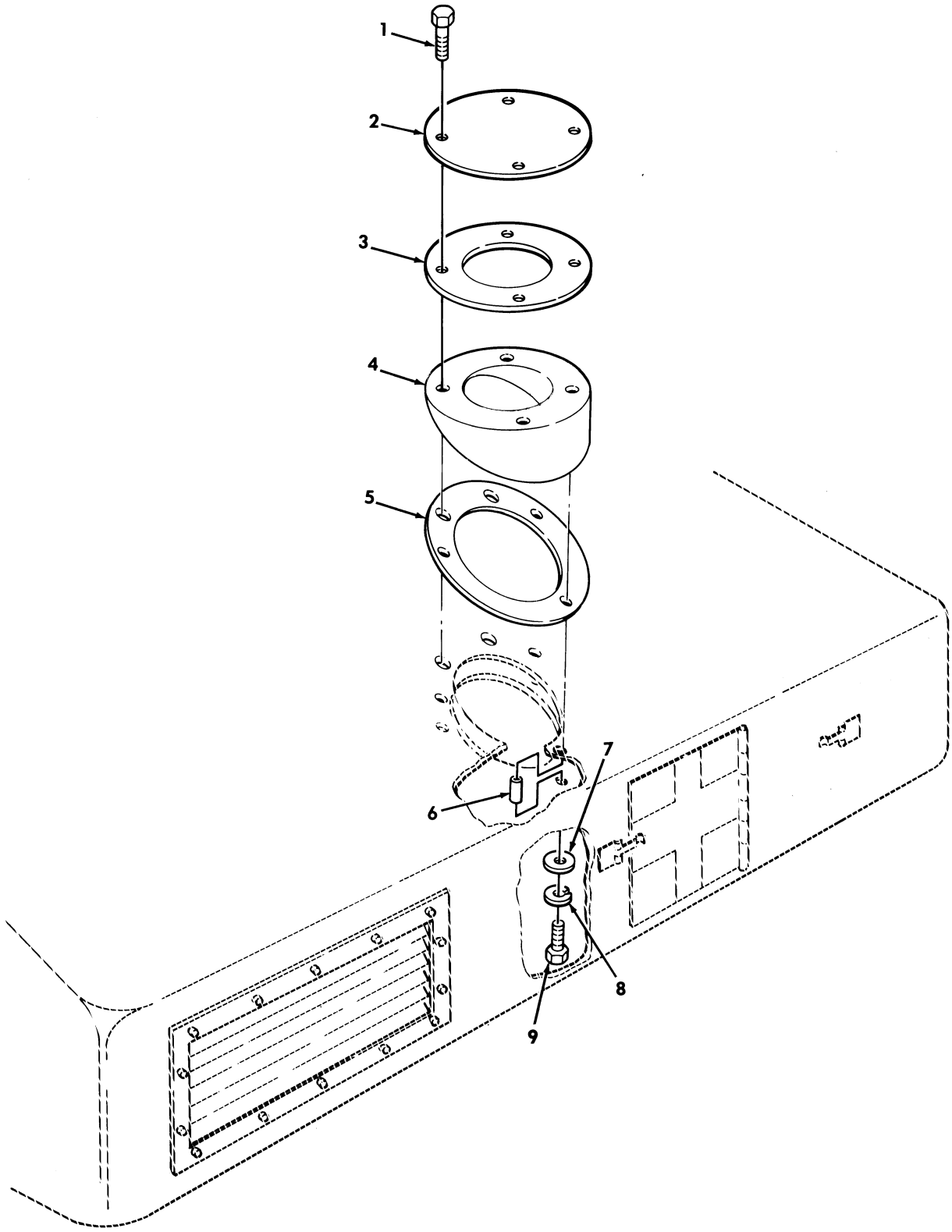

Figure 341. Antenna Mount and Mounting Hardware, M997, M997A1, and M997A2 Ambulance.

(1) ITEM NO	(2) SMR CODE	(3) NSN	(4) CAGEC	(5) PART NUMBER	(6) DESCRIPTION AND USABLE ON CODES(UOC)	(7) QTY
					GROUP 2202 ACCESSORY ITEMS	
					FIG. 341 ANTENNA MOUNT AND MOUNTING HARDWARE,M997,M997A1,AND M997A2 AMBULANCE	
1	PAOZZ	5305005432419	80204	B1821BH038C113N	SCREW,CAP,HEXAGON H 3/8-16 X 1.125. UOC:A15,B15,H15	4
2	PAOZZ	5985012698271	34623	5598650	SUPPORT,ANTENNA..... UOC:A15,B15,H15	1
3	PAOZZ	5330012708315	19207	12341876	GASKET..... UOC:A15,B15,H15	1
4	PAOZZ	5985012698274	19207	12341108	BASE,ANTENNA SUPPOR..... UOC:A15,B15,H15	1
5	PAOZZ	5330012820913	34623	5589970	GASKET..... UOC:A15,B15,H15	1
6	XBOZZ		34623	5934310	SPACER,FRAME..... UOC:A15,B15,H15	3
7	PAOZZ	5310014124013	24617	2436163	WASHER,FLAT 3/8..... UOC:A15,B15,H15	3
8	PAOZZ	5310002617340	96906	MS35338-8	WASHER,LOCK 3/8..... UOC:A15,B15,H15	3
9	PAOZZ	5305006388920	80204	B1821BH038C225N	SCREW,CAP,HEXAGON H 3/8-16 X 2.250. UOC:A15,B15,H15	3

END OF FIGURE

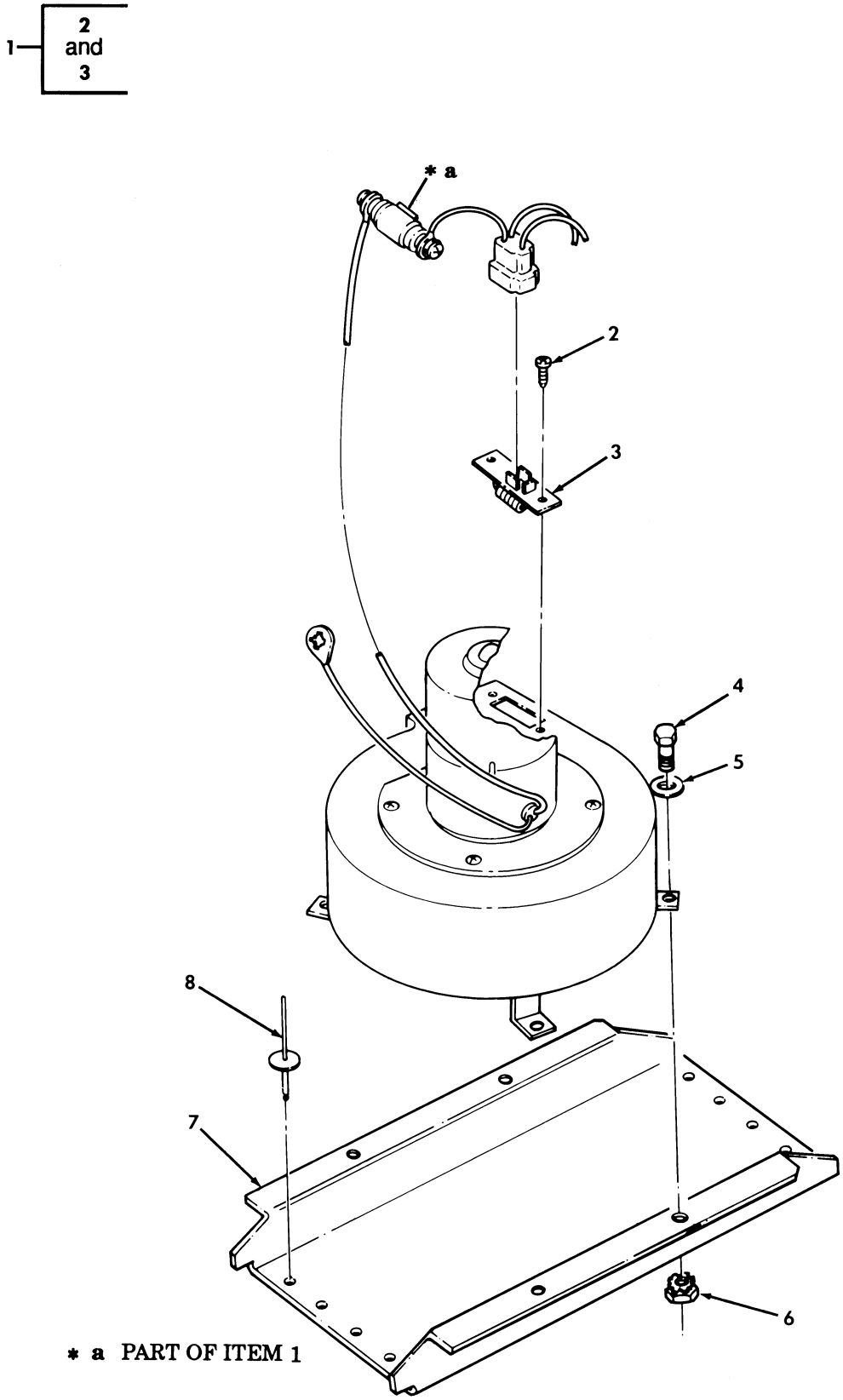

Figure 342. Heater Blower Assembly, M996 and M996A1 Ambulance.

(1) ITEM NO	(2) SMR CODE	(3) NSN	(4) CAGEC	(5) PART NUMBER	(6) DESCRIPTION AND USABLE ON CODES(UOC)	(7) QTY
					GROUP 2202 ACCESSORY ITEMS	
					FIG. 342 HEATER BLOWER ASSEMBLY,M996 AND M996A1 AMBULANCE	
1	PAOZZ	4140012653151	19207	12341610	FAN,CENTRIFUGAL..... UOC:B16,H16	1
2	PAOZZ	5305012705419	24234	200335	.SCREW,TAPPING,THREA..... UOC:B16,H16	2
3	PAOZZ	5905012700966	21002	HV033596	.RESISTOR,FIXED,FILM..... UOC:B16,H16	1
4	PAOZZ	5305000680502	96906	MS90725-6	SCREW,CAP,HEXAGON H 1/4-20 X .75... UOC:B16,H16	3
5	PAOZZ	5310005825965	96906	MS35338-44	WASHER,LOCK 1/4..... UOC:B16,H16	3
6	PAOZZ	4931012028692	19207	12339998-13	PLUSNUT 1/4-20..... UOC:B16,H16	3
7	PFOZZ	5340012893244	19207	12341661	BRACKET,MOUNTING..... UOC:B16,H16	1
8	PAOZZ	5320012645978	19207	12339355-2	RIVET,BLIND 3/16..... UOC:B16,H16	8

END OF FIGURE

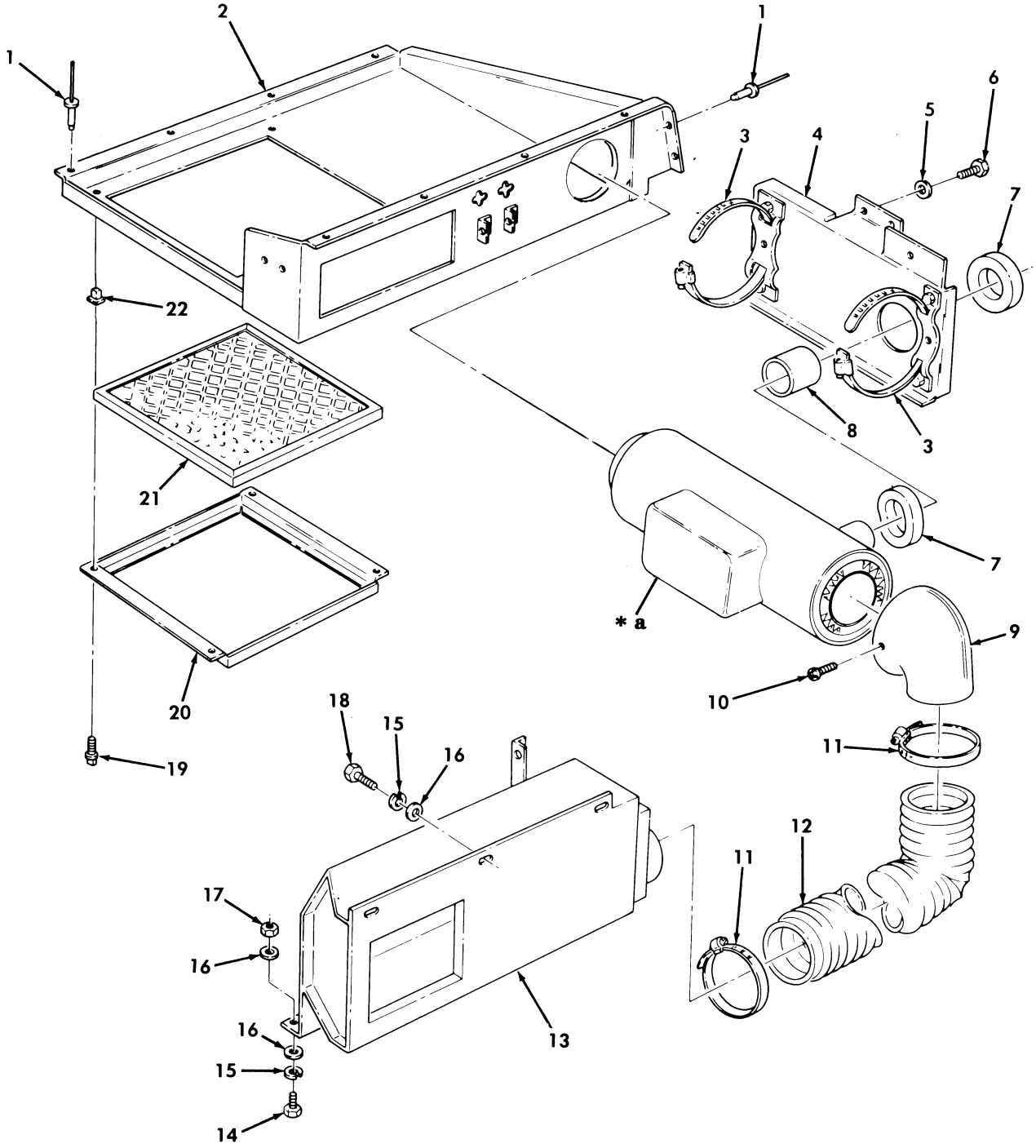

* a SEE FIGURE **345** AND **348** FOR MODELS AND BREAKDOWN

Figure 343. Heater, Filter, and Attaching Hardware, M997, M997A1, and M997A2 Ambulance.

(1) ITEM NO	(2) SMR CODE	(3) NSN	(4) CAGEC	(5) PART NUMBER	(6) DESCRIPTION AND USABLE ON CODES(UOC)	(7) QTY
					GROUP 2202 ACCESSORY ITEMS	
					FIG. 343 HEATER,FILTER,AND ATTACHING HARDWARE,M997,M997A1,AND M997A2 AMBULANCE	
1	PAOZZ	5320012716357	9K475	MGLP-B6-4	RIVET,BLIND..... UOC:A15,B15,H15	10
2	PFOZZ	2540012911043	15434	410912	VENTILATOR,AIR CIRC..... UOC:A15,B15,H15	1
3	PAOZZ	4730009086294	76599	96HSS	CLAMP,HOSE..... UOC:A15,B15,H15	2
4	XBOZZ		34623	5597900	BRACKET,MOUNTING..... UOC:A15,B15,H15	1
5	PAOZZ	5310002748710	24234	202751	WASHER,LOCK #10..... UOC:A15,B15,H15	2
6	PAOZZ	5305012967762	24234	201686	SCREW,CAP,HEXAGON H 1/4-20 X .75... UOC:A15,B15,H15	2
7	PFOZZ	5330012708317	34623	5741471	GASKET..... UOC:A15,B15,H15	2
8	PFOZZ	2510012730572	34623	5741525	COLLAR,FRAME..... UOC:A15,B15,H15	1
9	PAOZZ	4520011926073	99688	586230	ADAPTER,AIR CONDITI..... UOC:A15,B15,H15	1
10	PAOZZ	5305009846195	96906	MS35206-247	SCREW,MACHINE..... UOC:A15,B15,H15	3
11	PAOZZ	4730012737660	7Z588	63060	CLAMP,HOSE..... UOC:A15,B15,H15	2
12	PFOZZ	4720012653238	24234	319032	HOSE,NONMETALLIC..... UOC:A15,B15,H15	1
13	PFOZZ	2540012969358	24234	410922	VENTILATOR,AIR CIRC..... UOC:A15,B15,H15	1
14	PAOZZ	5305000680502	96906	MS90725-6	SCREW,CAP,HEXAGON H 1/4-20 X 3/4... UOC:A15,B15,H15	4
15	PAOZZ	5310005825965	96906	MS35338-44	WASHER,LOCK 1/4..... UOC:A15,B15,H15	7
16	PAOZZ	5310008094058	96906	MS27183-10	WASHER,FLAT 1/4..... UOC:A15,B15,H15	11
17	PAOZZ	5310000614650	96906	MS51943-31	NUT,SELF-LOCKING,HE 1/4-20..... UOC:A15,B15,H15	4
18	PAOZZ	5305002253843	80204	B1821BH025C100N	SCREW,CAP,HEXAGON H 1/4-20 X 1.00.. UOC:A15,B15,H15	3
19	PAOZZ	5305012645874	19207	12340792	SCREW,TAPPING #10 X 1/2..... UOC:A15,B15,H15	4
20	PFOZZ	2940012852942	24234	513447	FILTER BODY,FLUID..... UOC:A15,B15,H15	1
21	PAOZZ	2540012653266	24234	407234	FILTER ELEMENT,FLUI..... UOC:A15,B15,H15	1
22	PAOZZ	5310012705394	34623	5741475	NUT,EXPANSION..... UOC:A15,B15,H15	4

END OF FIGURE

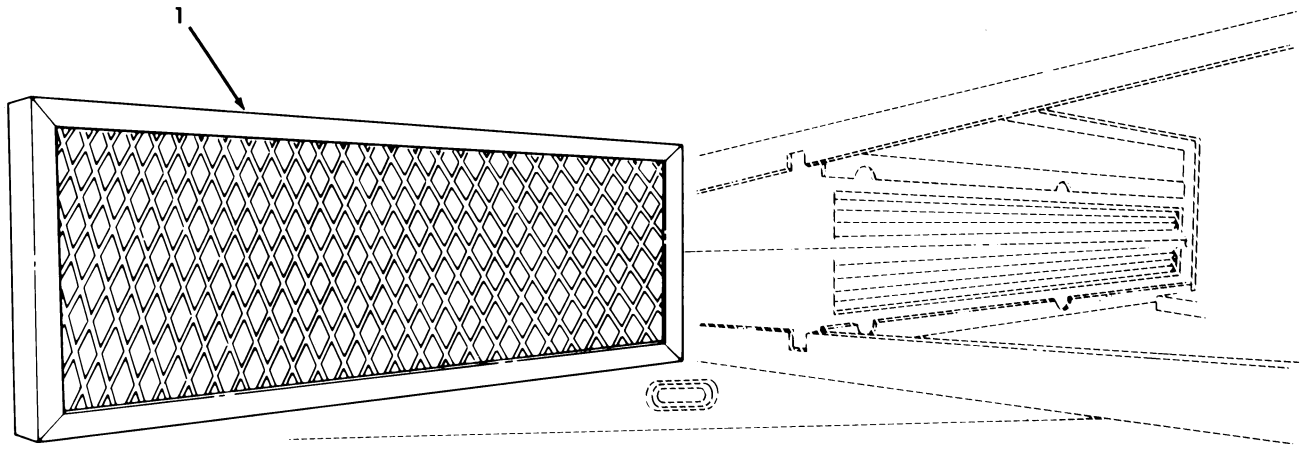

Figure 344. Air Intake Filter, M996 and M996A1 Ambulance.

(1) ITEM NO	(2) SMR CODE	(3) NSN	(4) CAGEC	(5) PART NUMBER	(6) DESCRIPTION AND USABLE ON CODES(UOC)	(7) QTY
					GROUP 2202 ACCESSORY ITEMS	
					FIG. 344 AIR INTAKE FILTER,M996 AND M996A1 AMBULANCE	
1	PAOZZ	4130012658691	19207	12341286	FILTER ELEMENT,AIR..... UOC:B16,H16	1

END OF FIGURE

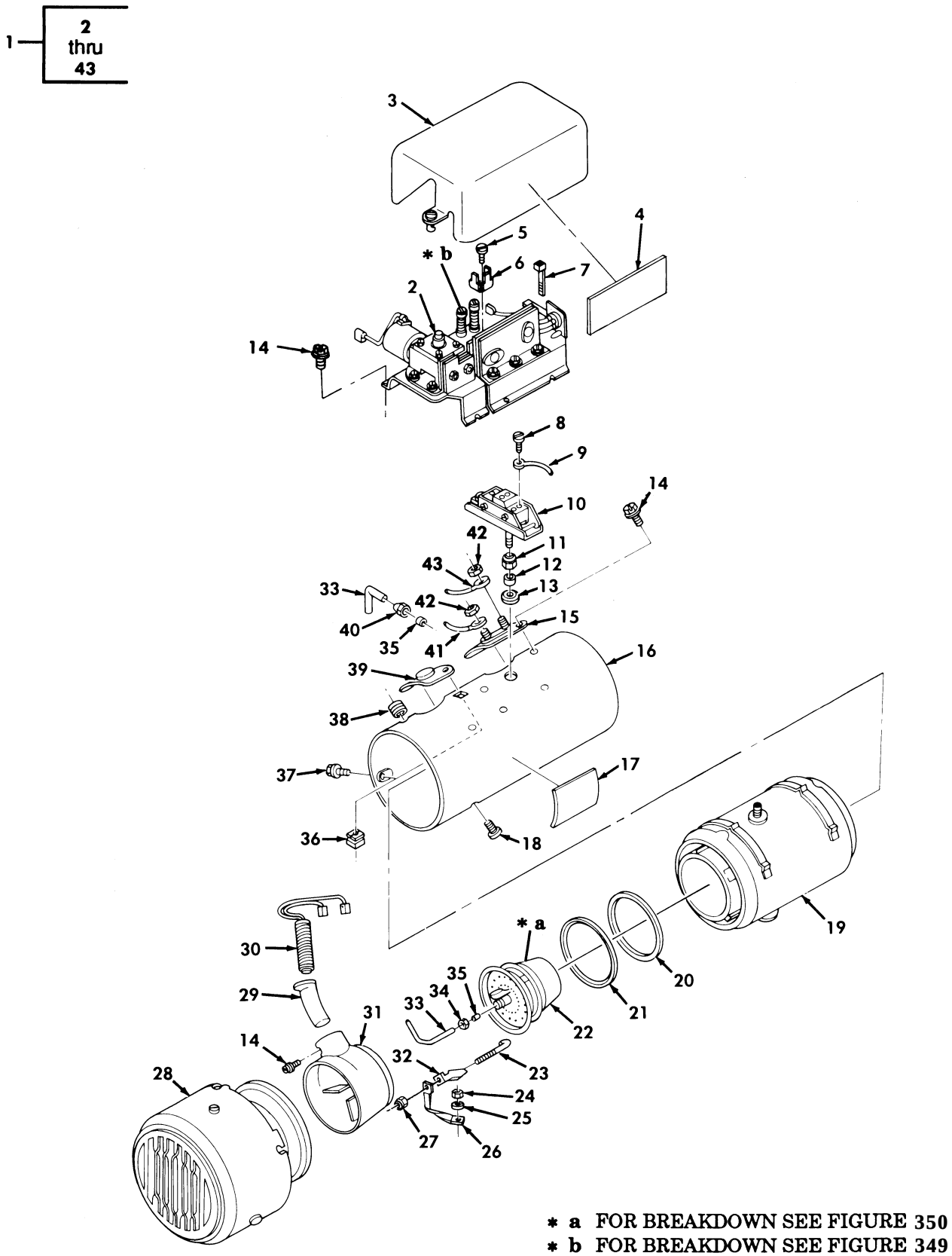

Figure 345. Heater Assembly, Multifuel, B=Model, M996, M996A1, M997, M997A1, and M997A2 Ambulance.

(1) ITEM NO	(2) SMR CODE	(3) NSN	(4) CAGEC	(5) PART NUMBER	(6) DESCRIPTION AND USABLE ON CODES(UOC)	(7) QTY
					GROUP 2202 ACCESSORY ITEMS	
					FIG. 345 HEATER ASSEMBLY,MULTIFUEL, B-MODEL,M996,M996A1,M997,M997A1,AND M997A2 AMBULANCE	
1	PAOFF	2540011943323	81349	MIL-PRF-62550/3	HEATER,VEHICULAR,CO..... UOC:A15,B15,B16,H15,H16	1
2	XBFFF		78385	G706064	.BRACKET,COMPONENT H..... UOC:A15,B15,B16,H15,H16	1
3	PFFZZ	5340012906331	78385	G706033	.COVER,ACCESS..... UOC:A15,B15,B16,H15,H16	1
4	PFFZZ	7690012837938	78385	706025	.DECAL..... UOC:A15,B15,B16,H15,H16	1
5	PAFZZ	5305012906290	78385	706074	.SCREW,CAP,HEXAGON H #8-32 X 3/8... UOC:A15,B15,B16,H15,H16	2
6	PFFZZ	5940012926907	78385	706070	.TERMINAL,STATIONARY..... UOC:A15,B15,B16,H15,H16	1
7	PAFZZ	5975011280390	06383	PLT2S	.STRAP,TIEDOWN,ELECT..... UOC:A15,B15,B16,H15,H16	4
8	PAFZZ	5305004562582	57733	170677	.SCREW,ASSEMBLED WAS #6-32 X 1/4... UOC:A15,B15,B16,H15,H16	5
9	PFFZZ	6150012879918	78385	G706052-25	.CABLE ASSEMBLY,SPEC..... UOC:A15,B15,B16,H15,H16	1
10	PAFZZ	5930003455455	19207	11663057	.SWITCH,THERMOSTATIC..... UOC:A15,B15,B16,H15,H16	1
11	PAFZZ	5975012886594	78385	705267	.NUT,COUPLING,ELECTR 1/4..... UOC:A15,B15,B16,H15,H16	1
12	PAFZZ	4730011937390	10988	222-652	.SLEEVE,COMPRESSION,..... UOC:A15,B15,B16,H15,H16	1
13	PAFZZ	5310012878726	78385	705930	.WASHER,FLAT..... UOC:A15,B15,B16,H15,H16	1
14	PAFZZ	5305004035130	24617	423531	.SCREW,MACHINE #8-32 X 1/4..... UOC:A15,B15,B16,H15,H16	12
15	PAFZZ	5930006795925	19207	10948233	.SWITCH,THERMOSTATIC..... UOC:A15,B15,B16,H15,H16	1
16	XAFZZ		78385	G706034	.HOUSING ASSEMBLY..... UOC:A15,B15,B16,H15,H16	1
17	PFOZZ	9905012837937	78385	706015	.PLATE,IDENTIFICATIO..... UOC:A15,B15,B16,H15,H16	1
18	PAFZZ	5305005762335	57733	487357	.SCREW,ASSEMBLED WAS #8-32 X 3/8... UOC:A15,B15,B16,H15,H16	1
19	PFFZZ	2540011650465	78385	G704232	.HEAT EXCHANGER..... UOC:A15,B15,B16,H15,H16	1
20	PAFZZ	5330000890978	19207	10948235	.GASKET PART OF KIT P/N 5704052..... UOC:A15,B15,B16,H15,H16	1
21	PAFZZ	5331000890998	78385	718768-23	.O-RING PART OF KIT P/N 5704052..... UOC:A15,B15,B16,H15,H16	1
22	PFFZZ	4520012847099	78385	G706055	.BURNER ASSEMBLY,SPA..... UOC:A15,B15,B16,H15,H16	1
23	PAFZZ	5306013517742	78385	703547	.BOLT,HOOK PART OF KIT P/N 5704052.. UOC:A15,B15,B16,H15,H16	4
24	PAFZZ	5310003337341	78385	487283	.NUT,PLAIN,HEXAGON #8-32 PART OF	4

(1) ITEM NO	(2) SMR CODE	(3) NSN	(4) CAGEC	(5) PART NUMBER	(6) DESCRIPTION AND USABLE ON CODES(UOC)	(7) QTY
					KIT P/N 5704052.....	
					UOC:A15,B15,B16,H15,H16	
25	PAFZZ	5310000610004	57733	475005	.WASHER,LOCK #8.....	1
					UOC:A15,B15,B16,H15,H16	
26	PFFZZ	6150011654667	78385	G704373	.LEAD,ELECTRICAL.....	1
					UOC:A15,B15,B16,H15,H16	
27	PAFZZ	5310012876543	78385	706131	.NUT,SELF-LOCKING,HE #8-32 PART OF	4
					KIT P/N 5704052.....	
					UOC:A15,B15,B16,H15,H16	
28	PAFZZ	2540012898328	78385	G706014	.BLOWER ASSEMBLY,HEA.....	1
					UOC:A15,B15,B16,H15,H16	
29	PFFZZ	2540011658176	78385	G704288-1	.IGNITER TUBE AND BR.....	1
					UOC:A15,B15,B16,H15,H16	
30	PAOZZ	4520002175782	16236	CS-4520-SV-0705	.IGNITER,SPARK,FUEL.....	1
					UOC:A15,B15,B16,H15,H16	
31	PFFZZ	2540011658175	78385	G704177	.HOUSING,BAFFLE,HEAT.....	1
					UOC:A15,B15,B16,H15,H16	
32	PFFZZ	5340012365101	78385	703546	.CLAMP,RIM CLENCHING PART OF KIT P/N	4
					5704052.....	
					UOC:A15,B15,B16,H15,H16	
33	PFFZZ	4710011632805	78385	704363	.TUBE ASSEMBLY,METAL.....	1
					UOC:A15,B15,B16,H15,H16	
34	PFFZZ	4730000433750	21450	120487	.NUT,TUBE COUPLING.....	1
					UOC:A15,B15,B16,H15,H16	
35	PFFZZ	4730007017737	78385	476624	.SLEEVE,COMPRESSION,.....	2
					UOC:A15,B15,B16,H15,H16	
36	PFFZZ	2540012900715	78385	706041	.RECEPTACLE,HEATER H.....	2
					UOC:A15,B15,B16,H15,H16	
37	PAFZZ	5305000188370	78385	489142	.SCREW,MACHINE #8-32 X 3/8.....	4
					UOC:A15,B15,B16,H15,H16	
38	PAFZZ	5325005432902	78385	488993	.GROMMET,NONMETALLIC.....	1
					UOC:A15,B15,B16,H15,H16	
39	PFOZZ	2540012898329	78385	G706035	.HATCH COVER,HEATER.....	1
					UOC:A15,B15,B16,H15,H16	
40	PFFZZ	4730011531871	79470	1611X3	.LOCKNUT,TUBE FITTIN.....	1
					UOC:A15,B15,B16,H15,H16	
41	PFFZZ	6150012914809	78385	G706052-9	.CABLE ASSEMBLY,SPEC.....	1
					UOC:A15,B15,B16,H15,H16	
42	PAFZZ	5310000637360	83385	841-6-32	.NUT,PLAIN,ASSEMBLED #6-32.....	2
					UOC:A15,B15,B16,H15,H16	
43	PFFZZ	6150012879917	78385	G706052-21	.CABLE ASSEMBLY,SPEC.....	1
					UOC:A15,B15,B16,H15,H16	

END OF FIGURE

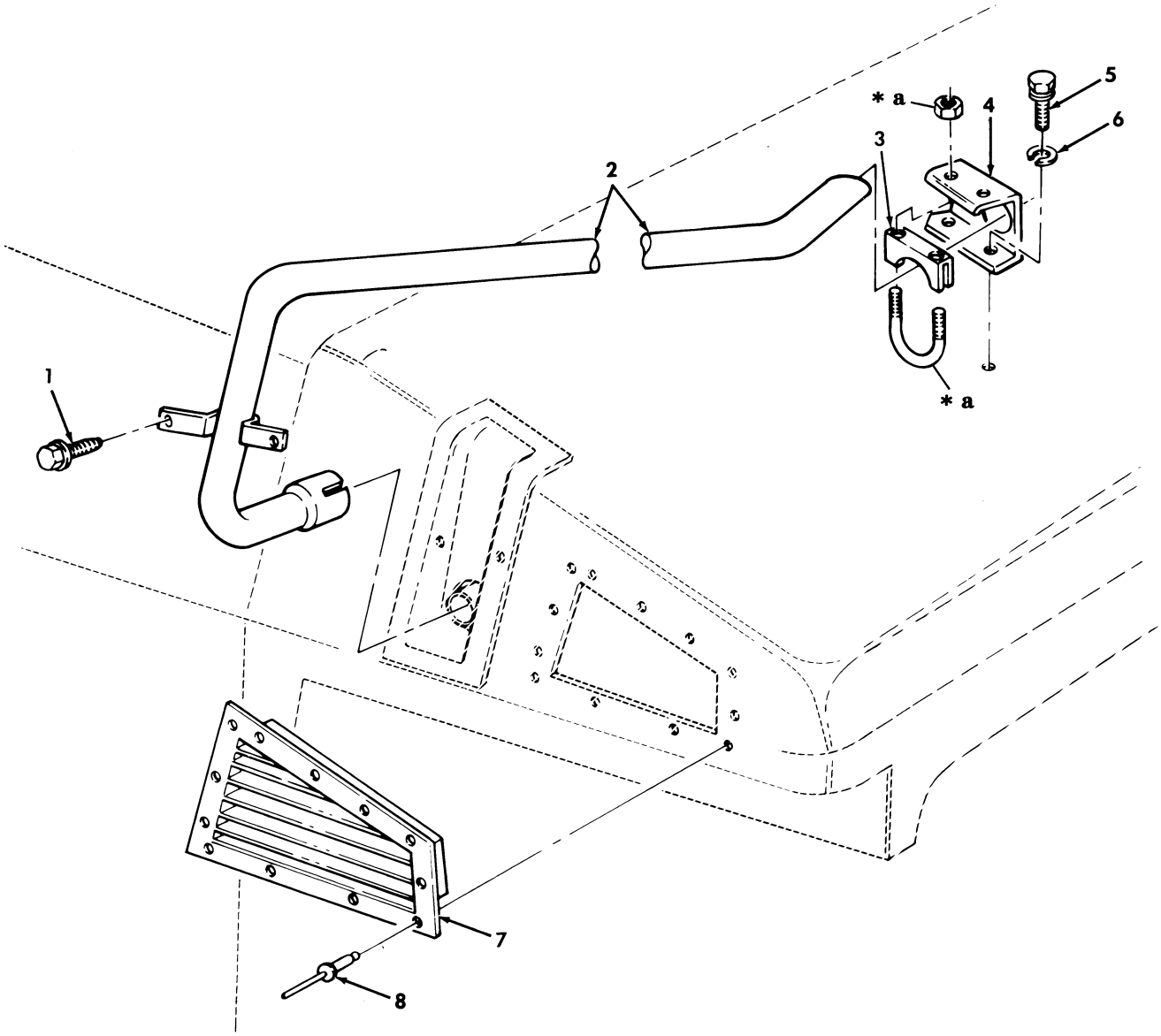

* a PART OF ITEM 3

Figure 346. Heater Grille, Exhaust Pipe, and Mounting Hardware, M996 and M996A1 Ambulance.

(1) ITEM NO	(2) SMR CODE	(3) NSN	(4) CAGEC	(5) PART NUMBER	(6) DESCRIPTION AND USABLE ON CODES(UOC)	(7) QTY
					GROUP 2202 ACCESSORY ITEMS	
					FIG. 346 HEATER GRILLE,EXHAUST PIPE, AND MOUNTING HARDWARE,M996 AND M996A1 AMBULANCE	
1	PAOZZ	5306002264828	80204	B1821BH031C113N	BOLT,MACHINE 5/16-18 X 1.125..... UOC:B16,H16	2
2	PFOZZ	2990012653297	19207	12341271	PIPE,EXHAUST..... UOC:B16,H16	1
3	PAOZZ	5340013330162	58536	A-A-52406-4SA	CLAMP,LOOP..... UOC:B16,H16	1
4	PFOZZ	5340012663843	19207	12341229	BRACKET,DOUBLE ANGL..... UOC:B16,H16	1
5	PAOZZ	5305013615353	24617	9414241	SCREW,TAPPING #10-32 X .50..... UOC:B16,H16	4
6	PAOZZ	5310000809786	96906	MS45904-60	WASHER,LOCK 5/16..... UOC:B16,H16	2
7	PFOZZ	5340012704415	19207	12341552	GRILLE,METAL..... UOC:B16,H16	1
8	PAOZZ	5320012711834	34623	5575940	RIVET,SOLID 3/16..... UOC:B16,H16	12

END OF FIGURE

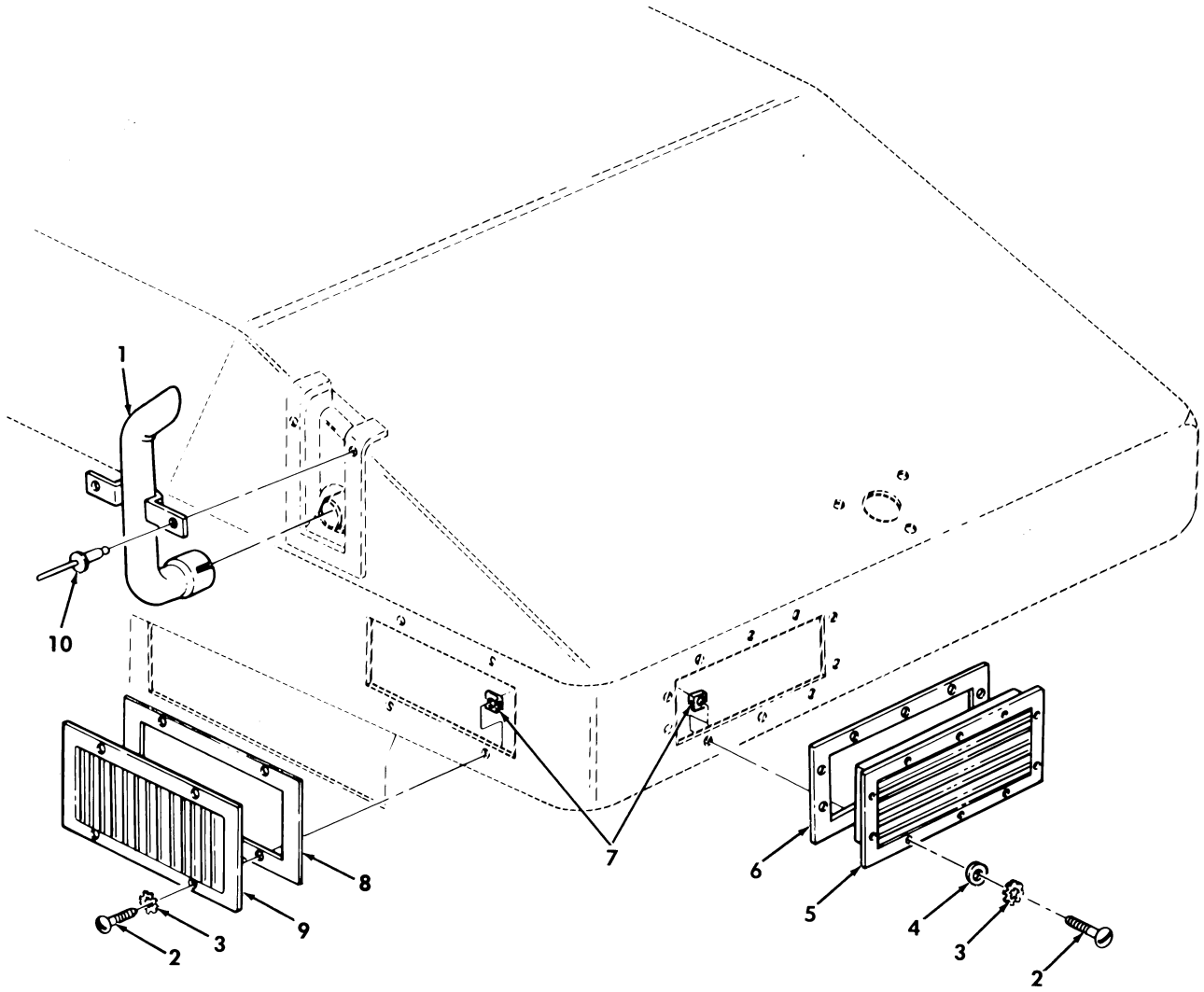

Figure 347. Heater Grille, Exhaust Pipe, and Mounting Hardware, M997, M997A1, and M997A2, Ambulance.

(1) ITEM NO	(2) SMR CODE	(3) NSN	(4) CAGEC	(5) PART NUMBER	(6) DESCRIPTION AND USABLE ON CODES(UOC)	(7) QTY
					GROUP 2202 ACCESSORY ITEMS	
					FIG. 347 HEATER GRILLE,EXHAUST PIPE, AND MOUNTING HARDWARE,M997,M997A1, AND M997A2 AMBULANCE	
1	PAOZZ	2990012653298	24234	513462	PIPE,EXHAUST..... UOC:A15,B15,H15	1
2	PAOZZ	5305012554606	34623	5592900	SCREW,MACHINE #10-24 X 1/2..... UOC:A15,B15,H15	14
3	PAOZZ	5310000809786	96906	MS45904-60	WASHER,LOCK #10..... UOC:A15,B15,H15	14
4	PAOZZ	5310000145850	96906	MS27183-42	WASHER,FLAT #10..... UOC:A15,B15,H15	10
5	PAOZZ	2510012707919	19207	12341533	GRILLE,RADIATOR,VEH..... UOC:A15,B15,H15	1
6	PAOZZ	5330012727472	19207	12341514	GASKET..... UOC:A15,B15,H15	1
7	PAOZZ	5310012155356	78553	C8117-1024	NUT,SHEET SPRING #10-24..... UOC:A15,B15,H15	14
8	PAOZZ	5330012727471	19207	12341487	GASKET..... UOC:A15,B15,H15	1
9	PAOZZ	2540012712839	19207	12341088	VENTILATOR,AIR CIRC..... UOC:A15,B15,H15	1
10	PAOZZ	5320012716357	9K475	MGLP-B6-4	RIVET,BLIND 3/16..... UOC:A15,B15,H15	2

END OF FIGURE

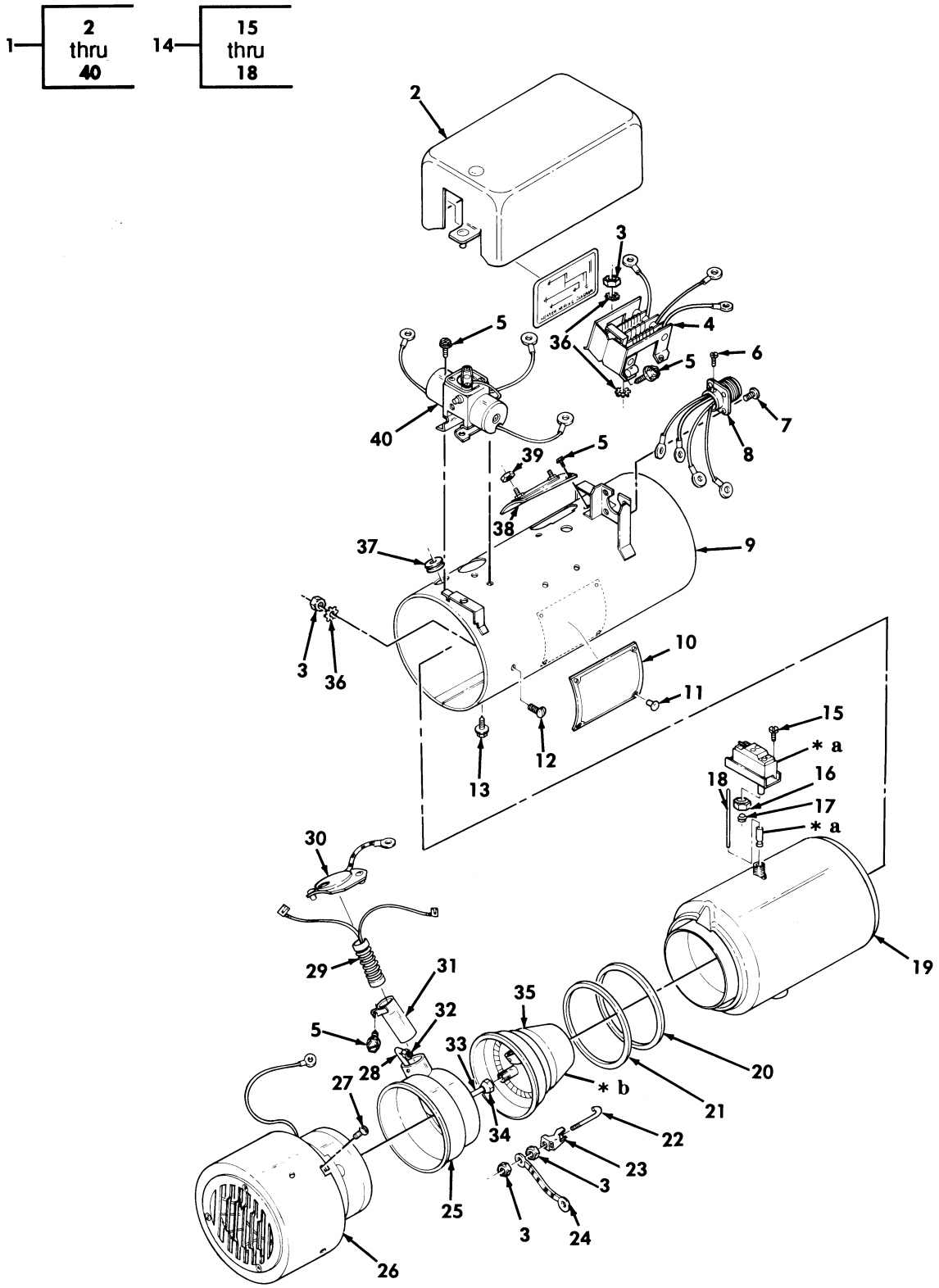

* a PART OF ITEM 14
* b SEE FIGURE 351 FOR BREAKDOWN

Figure 348. Heater Assembly, Multifuel, A-Model, M997, M997A1, and M997A2 Ambulance.

(1) ITEM NO	(2) SMR CODE	(3) NSN	(4) CAGEC	(5) PART NUMBER	(6) DESCRIPTION AND USABLE ON CODES(UOC)	(7) QTY
					GROUP 2202 ACCESSORY ITEMS	
					FIG. 348 HEATER ASSEMBLY,MULTIFUEL, A-MODEL,M997,M997A1,AND M997A2 AMBULANCE	
1	PAOFF	2540011943323	81349	MIL-PRF-62550/3	HEATER,VEHICULAR,CO..... UOC:A15,B15,H15	1
2	PFFZZ	5935011638981	78385	G704183	.COVER,ELECTRICAL CO..... UOC:A15,B15,H15	1
3	KFFZZ		78385	487283	.NUT,PLAIN,HEXAGON PART OF KIT P/N 5704052 PART OF KIT P/N G704424..... UOC:A15,B15,H15	4
4	PFFZZ	5905002517145	19207	11663061	.RESISTOR ASSEMBLY..... UOC:A15,B15,H15	1
5	PAFZZ	5305004035130	24617	423531	.SCREW,MACHINE #8-32 X 1/4..... UOC:A15,B15,H15	3
6	PAFZZ	5305004562582	57733	170677	.SCREW,ASSEMBLED WAS..... UOC:A15,B15,H15	1
7	PAFZZ	5305001353032	78385	488558	.SCREW,ASSEMBLED WAS #6-32 X 3/8... UOC:A15,B15,H15	4
8	PAFZZ	5935011638987	78385	G704234	.CONNECTOR,RECEPTACL..... UOC:A15,B15,H15	1
9	XAFZZ		78385	G704213	.HOUSING ASSEMBLY,HE..... UOC:A15,B15,H15	1
10	PFOZZ	9905010174748	78385	704501	.PLATE,IDENTIFICATIO..... UOC:A15,B15,H15	1
11	PAOZZ	5320008011548	57733	488755	.RIVET,BLIND..... UOC:A15,B15,H15	4
12	PAFZZ	5305005762335	57733	487357	.SCREW,ASSEMBLED WAS #8-32 X 3/8... UOC:A15,B15,H15	1
13	PAFZZ	5305004035130	24617	423531	.SCREW,MACHINE #8-32 X 1/4..... UOC:A15,B15,H15	9
14	PAFZZ	5930003455455	19207	11663057	.SWITCH,THERMOSTATIC..... UOC:A15,B15,H15	1
15	PAFZZ	5305004562582	57733	170677	..SCREW,ASSEMBLED WAS..... UOC:A15,B15,H15	5
16	PAFZZ	4730000114627	81343	4-060110B	..NUT,TUBE COUPLING 1/4..... UOC:A15,B15,H15	1
17	PFFZZ	4730011937390	10988	222-652	..SLEEVE,COMPRESSION,..... UOC:A15,B15,H15	1
18	PFFZZ	2540002165722	78385	704225	..ROD,NONEXPANSIVE..... UOC:A15,B15,H15	1
19	PFFZZ	2540011650465	78385	G704232	.HEAT EXCHANGER..... UOC:A15,B15,H15	1
20	KFFZZ		78385	702903	.GASKET PART OF KIT P/N 5704052 PART OF KIT P/N G704424 PART OF KIT P/N G706055..... UOC:A15,B15,H15	1
21	KFFZZ		78385	718768-23	.O-RING PART OF KIT P/N 5704052 PART OF KIT P/N G704424 PART OF KIT P/N G706055..... UOC:A15,B15,H15	1

(1) ITEM NO	(2) SMR CODE	(3) NSN	(4) CAGEC	(5) PART NUMBER	(6) DESCRIPTION AND USABLE ON CODES(UOC)	(7) QTY
22	KFFZZ		78385	703547	.BOLT,HOOK PART OF KIT P/N 5704052 PART OF KIT P/N G704424 PART OF KIT P/N G706055..... UOC:A15,B15,H15	2
23	KFFZZ		78385	703546	.CLAMP,RIM CLENCHING PART OF KIT P/N 5704052 PART OF KIT P/N G704424 PART OF KIT P/N G706055..... UOC:A15,B15,H15	4
24	PFFZZ	6150011654667	78385	G704373	.LEAD,ELECTRICAL..... UOC:A15,B15,H15	4
25	PFFZZ	2540011658175	78385	G704177	.HOUSING,BAFFLE,HEAT..... UOC:A15,B15,H15	1
26	PAFZZ	2540010081501	78385	G704554	.BLOWER ASSEMBLY..... UOC:A15,B15,H15	1
27	PAFZZ	5305000188370	78385	489142	.SCREW,MACHINE #8-3/8 X 1.00..... UOC:A15,B15,H15	4
28	PFFZZ	4710011632805	78385	704363	.TUBE ASSEMBLY,METAL..... UOC:A15,B15,H15	4
29	PAOZZ	4520002175782	16236	CS-4520-SV-0705	.IGNITER,SPARK,FUEL..... UOC:A15,B15,H15	1
30	PFFZZ	5340011650745	78385	G704293	.COVER,ACCESS..... UOC:A15,B15,H15	1
31	PFFZZ	2540011658176	78385	G704288-1	.IGNITER TUBE AND BR..... UOC:A15,B15,H15	1
32	PAFZZ	4730011531871	79470	1611X3	.LOCKNUT,TUBE FITTIN..... UOC:A15,B15,H15	1
33	PFFZZ	4730007017737	78385	476624	.SLEEVE,COMPRESSION,..... UOC:A15,B15,H15	1
34	PAFZZ	4730000433750	21450	120487	.NUT,TUBE COUPLING..... UOC:A15,B15,H15	1
35	KFFFZ		78385	G706037	.BURNER ASSEMBLY PART OF KIT P/N G704424 PART OF KIT P/N G706055..... UOC:A15,B15,H15	1
36	PAFZZ	5310000610004	57733	475005	.WASHER,LOCK..... UOC:A15,B15,H15	3
37	PAFZZ	5325005432902	78385	488993	.GROMMET,NONMETALLIC..... UOC:A15,B15,H15	1
38	PAFZZ	5930006795925	19207	10948233	.SWITCH,THERMOSTATIC..... UOC:A15,B15,H15	1
39	PAFZZ	5310000637360	83385	841-6-32	.NUT,PLAIN,ASSEMBLED #6-32..... UOC:A15,B15,H15	2
40	PAFHH	4810002481635	19207	11663058	.VALVE ASSEMBLY,FUEL..... UOC:A15,B15,H15	1

END OF FIGURE

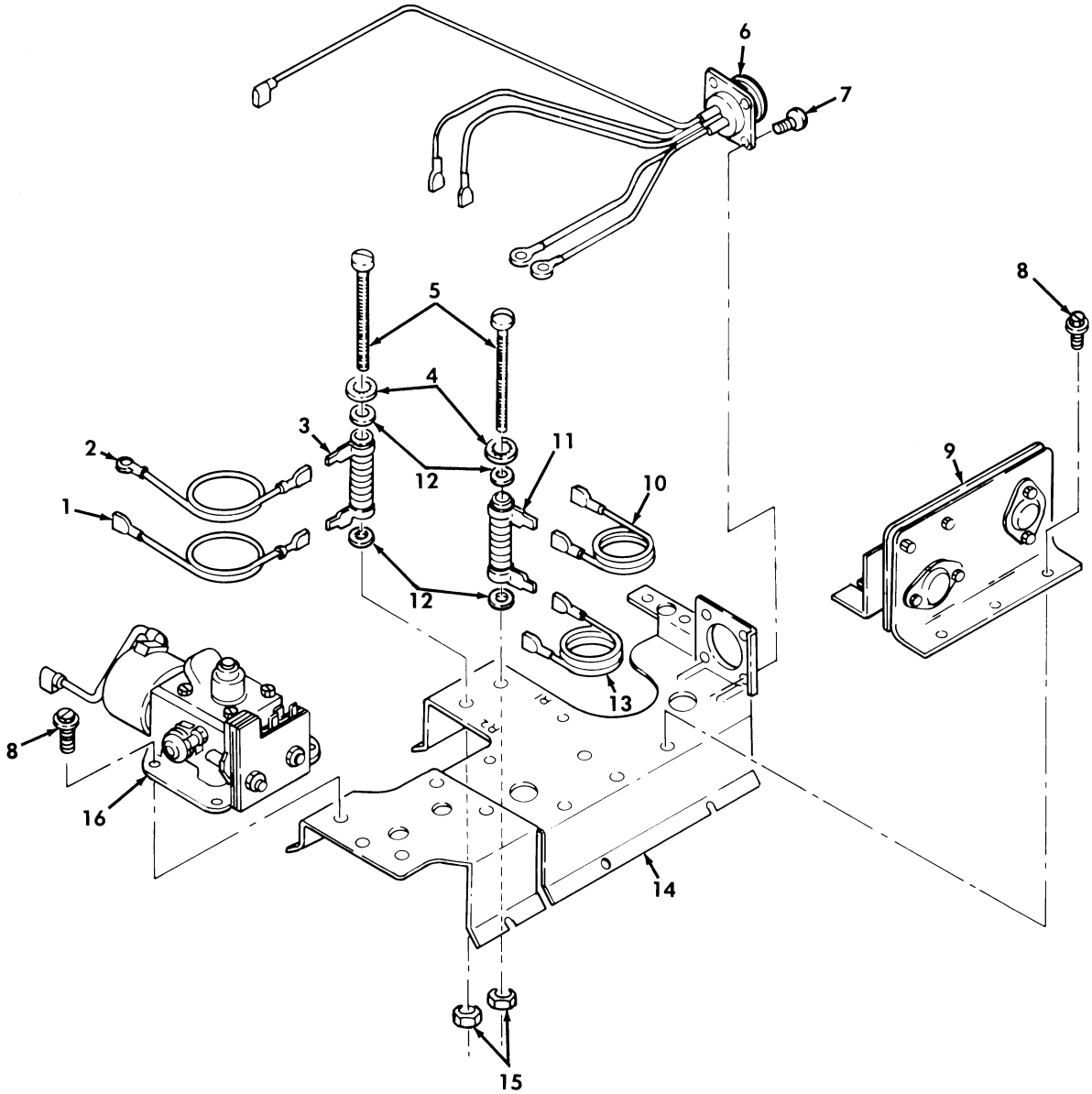

Figure 349. Heater Component Bracket Assembly, B-Model, M996, M996A1, M997, M997A1, and M997A2 Ambulance.

(1) ITEM NO	(2) SMR CODE	(3) NSN	(4) CAGEC	(5) PART NUMBER	(6) DESCRIPTION AND USABLE ON CODES(UOC)	(7) QTY
					GROUP 2202 ACCESSORY ITEMS	
					FIG. 349 HEATER COMPONENT BRACKET ASSEMBLY,B-MODEL,M996,M996A1,M997, M997A1,AND M997A2 AMBULANCE	
1	PFFZZ	6150012879925	78385	G706052-13	LEAD,ELECTRICAL..... UOC:A15,B15,B16,H15,H16	1
2	PFFZZ	6150012879924	78385	G706052-15	LEAD,ELECTRICAL..... UOC:A15,B15,B16,H15,H16	1
3	PAFZZ	5905012874255	78385	706053	RESISTOR,FIXED,WIRE..... UOC:A15,B15,B16,H15,H16	1
4	PAFZZ	5310005765752	96906	MS35333-39	WASHER,LOCK #10..... UOC:A15,B15,B16,H15,H16	2
5	PAFZZ	5305012881130	78385	703611	SCREW,MACHINE #10-32 X 2-1/2..... UOC:A15,B15,B16,H15,H16	2
6	PAFZZ	6150012934074	78385	G706026	LEAD ASSEMBLY,ELECT..... UOC:A15,B15,B16,H15,H16	1
7	PAFZZ	5305012881129	78385	705211	SCREW,MACHINE #5-40 X 5/16..... UOC:A15,B15,B16,H15,H16	4
8	PAFZZ	5305001159406	96906	MS51849-53	SCREW,MACHINE #8-32 X 3/8..... UOC:A15,B15,B16,H15,H16	7
9	PAFZZ	6110012853902	78385	G706057	VOLTAGE REGULATOR G..... UOC:A15,B15,B16,H15,H16	1
10	PFFZZ	6150012879923	78385	G706052-19	LEAD,ELECTRICAL..... UOC:A15,B15,B16,H15,H16	1
11	PAFZZ	5905012874256	78385	706045	RESISTOR,FIXED,WIRE..... UOC:A15,B15,B16,H15,H16	1
12	PAFZZ	5310012876557	78385	706050GV	WASHER,FLAT 5/16..... UOC:A15,B15,B16,H15,H16	4
13	PFFZZ	6150012879926	78385	G706052-17	LEAD,ELECTRICAL..... UOC:A15,B15,B16,H15,H16	1
14	XAFZZ		78385	G706024	COMPONENT BRACKET..... UOC:A15,B15,B16,H15,H16	1
15	PAFZZ	5310007890398	78385	487370	NUT,PLAIN,ASSEMBLED #10-32..... UOC:A15,B15,B16,H15,H16	2
16	PAFZZ	2540012536112	78385	G706016	FUEL VALVE..... UOC:A15,B15,B16,H15,H16	1

END OF FIGURE

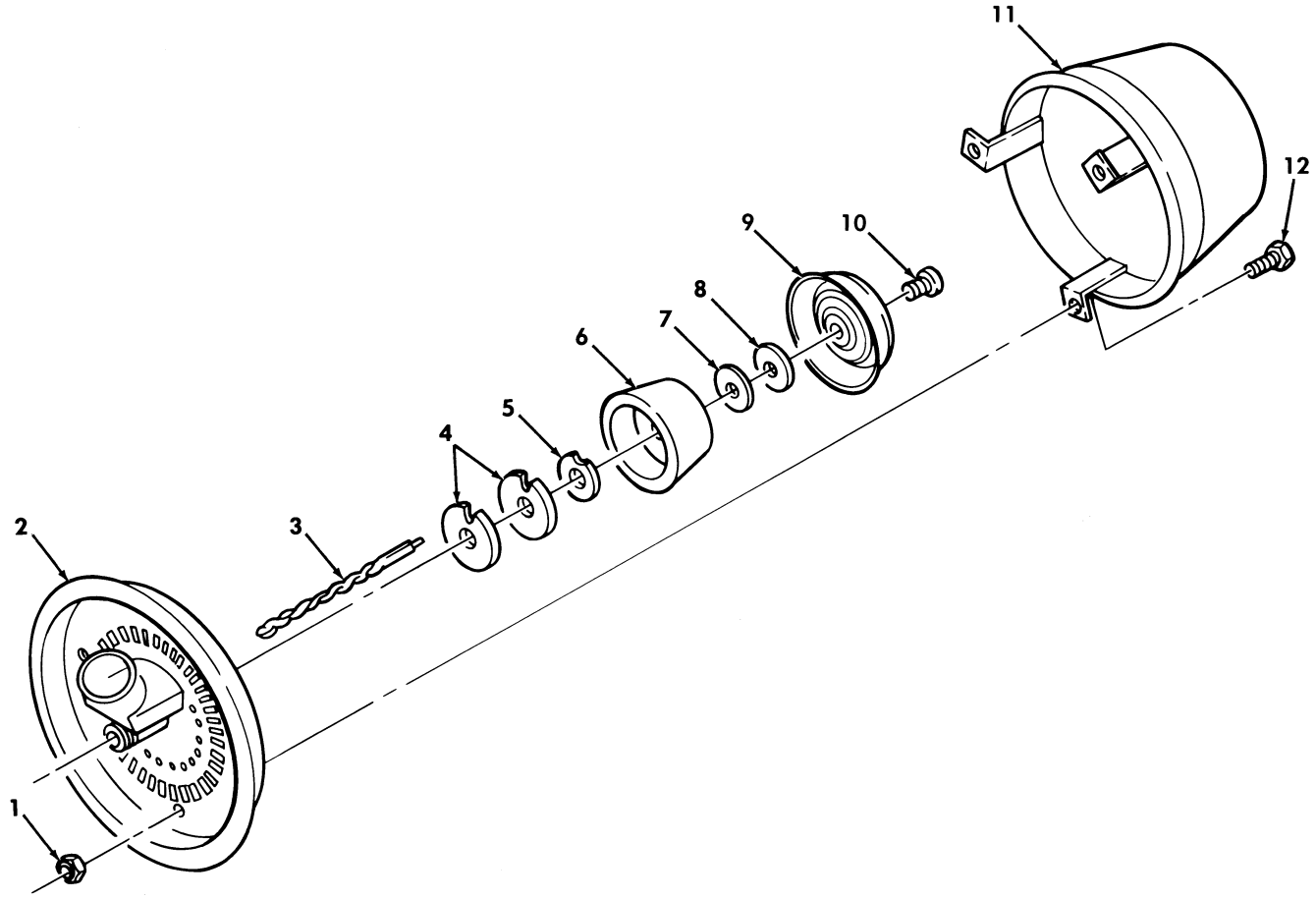

Figure 350. Burner Assembly, B-Model, M996, M996A1, M997, M997A1, and M997A2 Ambulance.

(1) ITEM NO	(2) SMR CODE	(3) NSN	(4) CAGEC	(5) PART NUMBER	(6) DESCRIPTION AND USABLE ON CODES(UOC)	(7) QTY
					GROUP 2202 ACCESSORY ITEMS	
					FIG. 350 BURNER ASSEMBLY,B-MODEL, M996,M996A1,M997,M997A1,AND M997A2 AMBULANCE	
1	KFFZZ		78385	705587	NUT,HEXAGON #8-32 PART OF KIT P/N 5704052..... UOC:A15,B15,B16,H15,H16	3
2	PFFZZ	2540011650814	78385	G704284	HEADER PLATE ASSEMB PART OF KIT P/N 5704052..... UOC:A15,B15,B16,H15,H16	1
3	KFFZZ		78385	705944	WICK PART OF KIT P/N 5704052..... UOC:A15,B15,B16,H15,H16	1
4	KFFZZ		78385	706062	WASHER PART OF KIT P/N 5704052..... UOC:A15,B15,B16,H15,H16	2
5	KFFZZ		78385	706049	WASHER PART OF KIT P/N 5704052..... UOC:A15,B15,B16,H15,H16	1
6	KFFZZ		78385	706063	VAPORIZER PART OF KIT P/N 5704052... UOC:A15,B15,B16,H15,H16	1
7	KFFZZ		78385	704678	WASHER,FLAT PART OF KIT P/N 5704052. UOC:A15,B15,B16,H15,H16	1
8	KFFZZ		78385	704190	WASHER PART OF KIT P/N 5704052..... UOC:A15,B15,B16,H15,H16	1
9	PFFZZ	2540011689482	78385	704181	SHIELD,FUEL VAPOR PART OF KIT P/N 5704052..... UOC:A15,B15,B16,H15,H16	1
10	PFFZZ	5305010978178	78385	704206	SCREW,MACHINE #8-32 X 1/4 PART OF KIT P/N 5704052..... UOC:A15,B15,B16,H15,H16	1
11	XAFZZ		78385	G706039	CUP..... UOC:A15,B15,B16,H15,H16	1
12	KFFZZ		78385	705032	SCREW #8-32 X 3/8 PART OF KIT P/N 5704052..... UOC:A15,B15,B16,H15,H16	3

END OF FIGURE

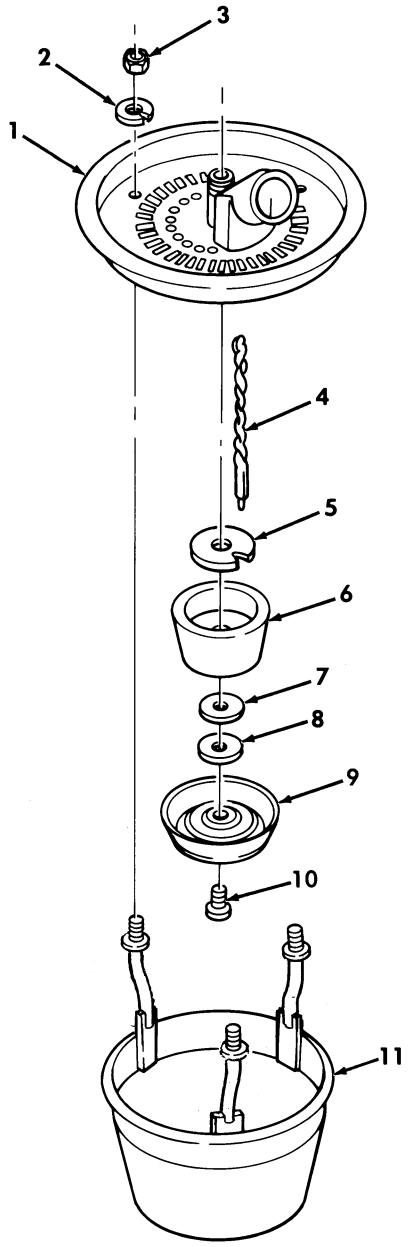

Figure 351. Burner Assembly, A-Model, M997, M997A1, and M997A2 Ambulance.

(1) ITEM NO	(2) SMR CODE	(3) NSN	(4) CAGEC	(5) PART NUMBER	(6) DESCRIPTION AND USABLE ON CODES(UOC)	(7) QTY
					GROUP 2202 ACCESSORY ITEMS	
					FIG. 351 BURNER ASSEMBLY,A-MODEL, M997,M997A1,AND M997A2 AMBULANCE	
1	PFFZZ	2540011650814	78385	G704284	HEADER PLATE ASSEMB PART OF KIT P/N 5704052..... UOC:A15,B15,H15	1
2	PFFZZ	5310010638522	78385	705237	WASHER,LOCK #8..... UOC:A15,B15,H15	3
3	PFFZZ	5310010573098	78385	705068	NUT,PLAIN,HEXAGON #8-32..... UOC:A15,B15,H15	3
4	KFFZZ		78385	705944	WICK PART OF KIT P/N 5704052..... UOC:A15,B15,H15	1
5	KFFZZ		78385	704191	WASHER,FIBER PART OF KIT P/N 5704052 UOC:A15,B15,H15	1
6	KFFZZ		78385	704192	VAPORIZER PART OF KIT P/N 5704052... UOC:A15,B15,H15	1
7	KFFZZ		78385	704678	WASHER,FLAT PART OF KIT P/N 5704052. UOC:A15,B15,H15	1
8	KFFZZ		78385	704190	WASHER PART OF KIT P/N 5704052..... UOC:A15,B15,H15	1
9	PFFZZ	2540011689482	78385	704181	SHIELD,FUEL VAPOR PART OF KIT P/N 5704052..... UOC:A15,B15,H15	1
10	PFFZZ	5305010978178	78385	704206	SCREW,MACHINE #8-32 X 1/4 PART OF KIT P/N 5704052..... UOC:A15,B15,H15	1
11	PFFZZ	2540011689481	78385	6706133	BURNER CUP AND STUD..... UOC:A15,B15,H15	1

END OF FIGURE

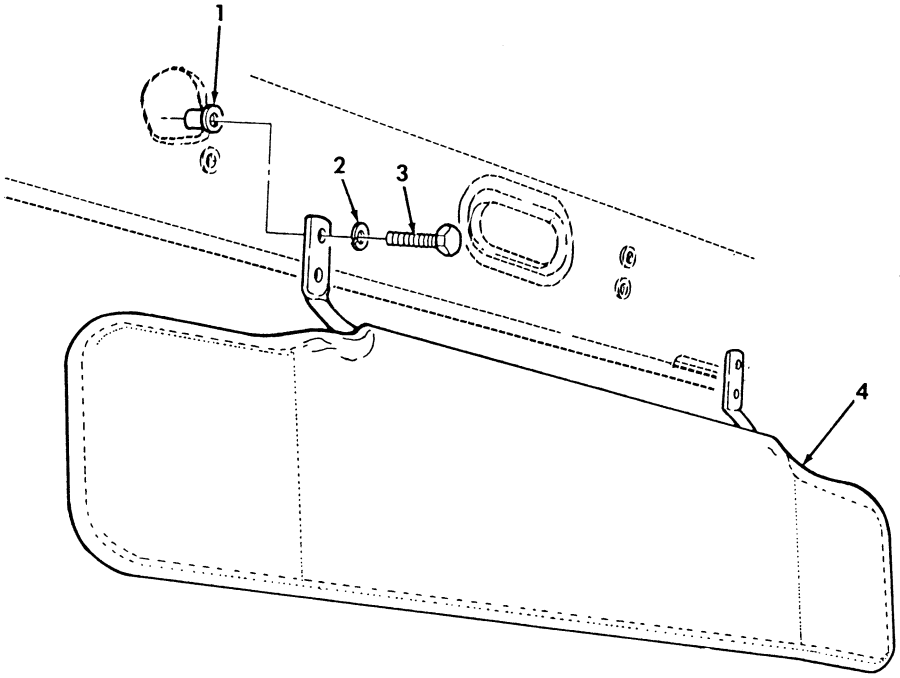

Figure 352. Sun Visor Assembly and Mounting Hardware.

(1) ITEM NO	(2) SMR CODE	(3) NSN	(4) CAGEC	(5) PART NUMBER	(6) DESCRIPTION AND USABLE ON CODES(UOC)	(7) QTY
					GROUP 2202 ACCESSORY ITEMS	
					FIG. 352 SUN VISOR ASSEMBLY AND MOUNTING HARDWARE	
1	PAOZZ	5310014113422	78276	ALS4-420-165	NUT,PLAIN,BLIND RIV..... UOC:BVY,B15,B20,B24,B25,C17,NNN	8
2	PAOZZ	5310006379541	96906	MS35338-46	WASHER,LOCK 3/8..... UOC:BVY,B15,B20,B24,B25,C17,NNN	8
3	PAOZZ	5305002253843	80204	B1821BH025C100N	SCREW,CAP,HEXAGON H 1/4-20 X 1.00.. UOC:A15,BVY,B20,B24,B25,C17,NNN	8
4	PAOZZ	2540014108793	34623	12446819	VISOR,SUN,VEHICLE..... UOC:BVY,B15,B20,B24,B25,C17,NNN	2

END OF FIGURE

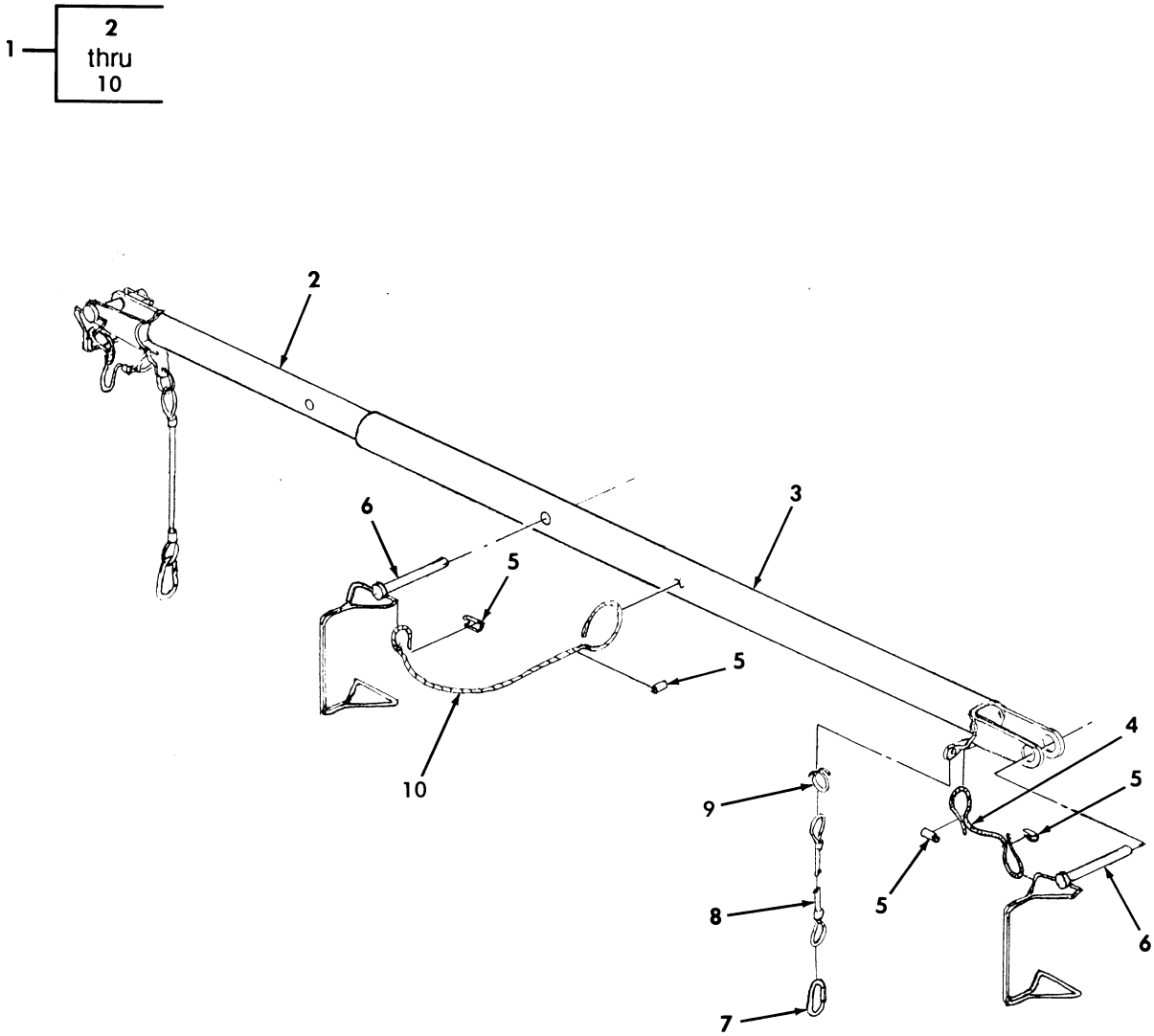

Figure 353. Ambulance Spreader Assembly.

(1) ITEM NO	(2) SMR CODE	(3) NSN	(4) CAGEC	(5) PART NUMBER	(6) DESCRIPTION AND USABLE ON CODES(UOC)	(7) QTY
					GROUP 2202 ACCESSORY ITEMS	
					FIG. 353 AMBULANCE SPREADER ASSEMBLY	
1	PAOZZ	4910013138839	19207	12342102	SPREADER,SLING..... UOC:A15,B15,B16,H15,H16	1
2	XAOZZ		19207	12342097	.EXTENSION BAR ASSY..... UOC:A15,B15,B16,H15,H16	1
3	XAOZZ		19207	12342099	.EXTENSION BAR ASSY..... UOC:A15,B15,B16,H15,H16	1
4	MOOZZ		19207	12342102-3	.CABLE MAKE FROM ROPE,WIRE P/N 8930T31, 10 INCHES LONG..... UOC:A15,B15,B16,H15,H16	2
5	PAOZZ	4030014069325	19207	12342102-1	.FERRULE,WIRE ROPE..... UOC:A15,B15,B16,H15,H16	6
6	PAOZZ	5315014065019	19207	12342121	.PIN,STRAIGHT,HEADED..... UOC:A15,B15,B16,H15,H16	3
7	PAOZZ	5340011251682	39428	3933T22	.SNAP HOOK..... UOC:A15,B15,B16,H15,H16	2
8	PAOZZ	4010014066963	19207	12342141	.WIRE ROPE ASSEMBLY,..... UOC:A15,B15,B16,H15,H16	2
9	PAOZZ	4010014109099	19207	12342102-4	.LINK,CHAIN,LAP..... UOC:A15,B15,B16,H15,H16	2
10	MOOZZ		19207	12342102-2	.CABLE MAKE FROM ROPE,WIRE P/N 8930T31, 20 INCHES LONG..... UOC:A15,B15,B16,H15,H16	1

END OF FIGURE

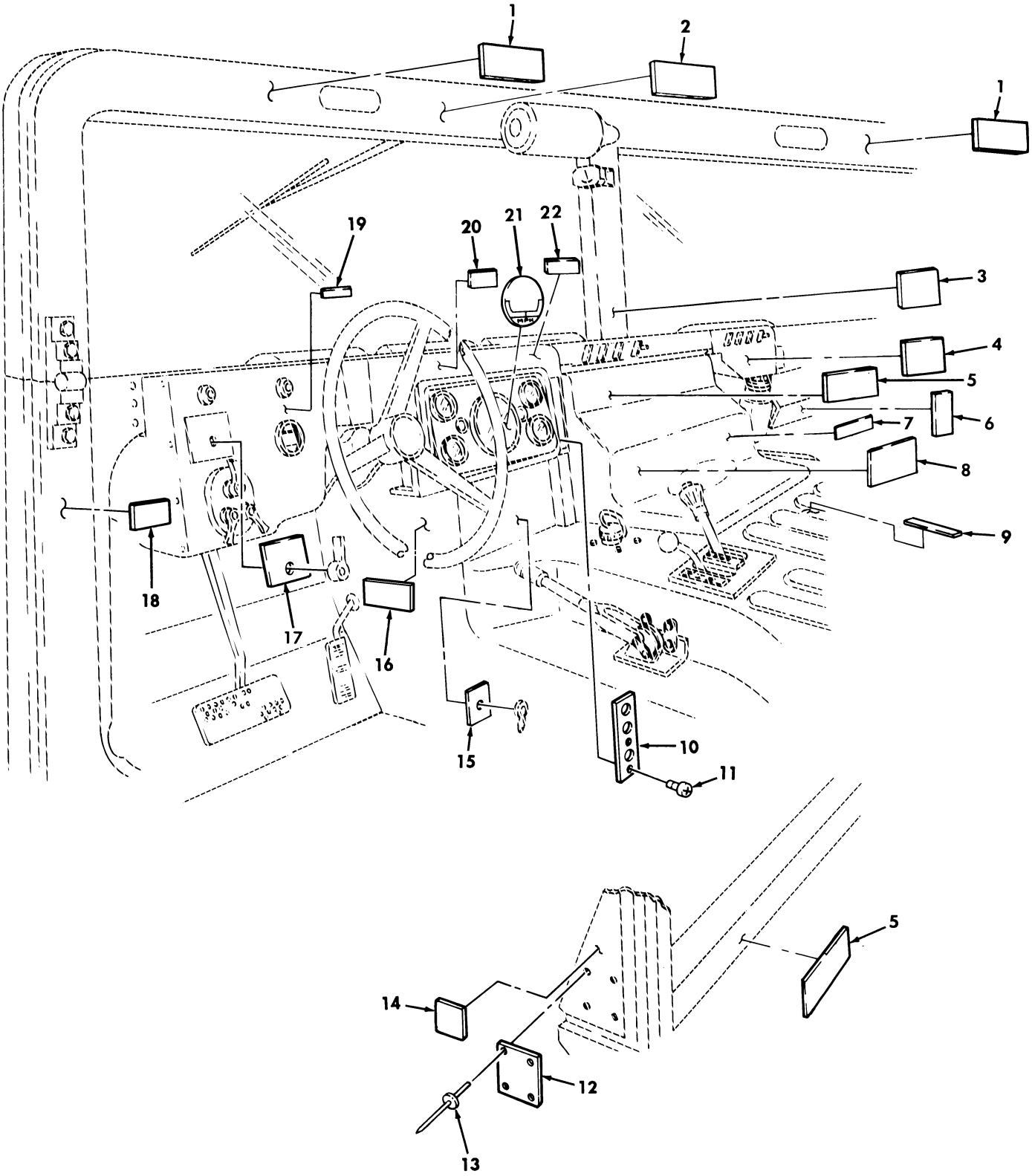

Figure 354. Data Plates, Dash Panel.

(1) ITEM NO	(2) SMR CODE	(3) NSN	(4) CAGEC	(5) PART NUMBER	(6) DESCRIPTION AND USABLE ON CODES(UOC)	(7) QTY
					GROUP 2210 DATA PLATES AND INSTRUCTION HOLDERS	
					FIG. 354 DATA PLATES,DASH PANEL	
1	PAOZZ	7690012040077	19207	12339053	DECAL..... UOC:A11,A15,A24,A25,A26,A27,B15,B16, B17,B18,B24,B25,C17,H11,H15,H16,H17, H18,H24,H25,H26,H27,MMM	2
2	PAOZZ	9905001982728	19207	11643398	PLATE,INSTRUCTION CAUTION,HIGH INTENSITY NOISE.....	1
3	PAOZZ	7690013158539	19207	12342165	MARKER,IDENTIFICATI VEHICLE BREAK-IN SERVICE.....	1
4	PFOZZ	7690014766089	19207	12447011	DECAL HEATER AIR CONTROL..... UOC:BVY,B15,B20,B24,B25,C17,NNN	1
4	PFOZZ	9905012039994	19207	12339100	PLATE,INSTRUCTION HEATER AIR CONTROL..... UOC:AVY,A11,A13,A14,A15,A20,A24,A25, A26,A27,B16,B17,B18,HVY,H11,H13,H14, H15,H16,H17,H18,H20,H21,H24,H25,H26, H27,H28,MMM	1
5	PAOZZ	9905011934065	19207	12339106	PLATE,INSTRUCTION SEAT BELT RETRACTOR,USBL EFF 1 THRU 99,999.... UOC:H11,H13,H14,H15,H16,H17,H18,H20, H21,H24,H25,H26,H27,H28,MMM	4
6	PAOZZ	7690012912974	34623	5597689	DECAL TIEDOWN DATA..... UOC:AVY,A11,A13,A14,A15,A20,A24,A25, A26,A27,B16,B17,B18,HVY,H11,H13,H14, H15,H16,H17,H18,H20,H21,H24,H25,H26, H27,H28,MMM	1
6	PFOZZ	9905014338554	19207	12460205	PLATE,INSTRUCTION TIEDOWN DATA..... UOC:BVY,B15,B20,B24,B25,C17,NNN	1
7	PAOZZ	9905012487657	19207	12339111	PLATE,INSTRUCTION SERVICE DATA..... UOC:AVY,A11,A13,A14,A15,A20,A24,A25, A26,A27,B16,B17,B18,HVY,H11,H13,H14, H15,H16,H17,H18,H20,H21,H24,H25,H26, H27,H28,MMM	1
7	PAOZZ	7690014766101	19207	12460157	DECAL SERVICE DATA..... UOC:BVY,B15,B20,B24,B25,C17,NNN	1
8	PFOZZ	9905012245860	19207	12339080	PLATE,INSTRUCTION OPERATING INSTRUCTION..... UOC:HVY,H11,H13,H14,H15,H16,H17,H18, H20,H21,H24,H25,H26,H27,H28,MMM	1
8	PFOZZ	9905013933794	19207	12343058	PLATE,INSTRUCTION OPERATING INSTRUCTIONS..... UOC:AVY,A11,A13,A14,A15,A20,A24,A25, A26,A27,B16,B17,B18,	1
8	PFOZZ	7690014766507	19207	12460156	DECAL OPERATING INSTRUCTION..... UOC:BVY,B15,B20,B24,B25,C17,NNN	1
9	PAOZZ	9905012047776	19207	12340910	PLATE,IDENTIFICATIO FIRE EXTINGUISHER.....	1
10	PFOZZ	7690014766510	19207	12447003	DECAL..... UOC:BVY,B15,B20,B24,B25,C17,NNN	1

(1) ITEM NO	(2) SMR CODE	(3) NSN	(4) CAGEC	(5) PART NUMBER	(6) DESCRIPTION AND USABLE ON CODES(UOC)	(7) QTY
10	PFOZZ	9905012039992	19207	12338470	PLATE,INSTRUCTION..... UOC:AVY,A11,A13,A14,A15,A20,A24,A25, A26,A27,B16,B17,B18,HVY,H11,H13,H14, H15,H16,H17,H18,H20,H21,H24,H25,H26, H27,H28,MMM	1
11	PAOZZ	5305009846191	96906	MS35206-243	SCREW,MACHINE #8-32 X 3/8.....	2
12	PFOZZ	9905013647342	19207	12342652	PLATE,IDENTIFICATIO NAME PLATE M1097..... UOC:HVY	1
12	PAOZZ	9905011853129	19207	12340868	PLATE,IDENTIFICATIO NAME PLATE M998 UOC:H13	1
12	PAOZZ	9905011853131	19207	12339085	PLATE,IDENTIFICATIO NAME PLATE M996 UOC:H16	1
12	PFOZZ	9905011853132	19207	12339077	PLATE,IDENTIFICATIO NAME PLATE M997 UOC:H15	1
12	PFOZZ	9905011853134	19207	12339082	PLATE,IDENTIFICATIO NAME PLATE M966 UOC:H11	1
12	PAOZZ	9905011863253	19207	12339110	PLATE,IDENTIFICATIO..... UOC:H17	1
12	PFOZZ	9905011863255	19207	12339090	PLATE,IDENTIFICATIO NAME PLATE M1026..... UOC:H18	1
12	PFOZZ	9905011857972	19207	12339095	PLATE,IDENTIFICATIO NAME PLATE M1035..... UOC:H20	1
12	PFOZZ	9905011863259	19207	12339104	PLATE,IDENTIFICATIO NAME PLATE M1037..... UOC:H21	1
12	PFOZZ	9905011908425	19207	12340867	PLATE,IDENTIFICATIO NAME PLATE M1038..... UOC:H14	1
12	PFOZZ	9905011908427	19207	12341812	PLATE,IDENTIFICATIO NAME PLATE M1042..... UOC:H28	1
12	PFOZZ	9905011853138	19207	12339076	PLATE,IDENTIFICATIO NAME PLATE, M1045..... UOC:H24	1
12	PFOZZ	9905011853139	19207	12339099	PLATE,IDENTIFICATIO NAME PLATE M1043..... UOC:H25	1
12	PFOZZ	9905011857973	19207	12339091	PLATE,IDENTIFICATIO NAME PLATE M1044..... UOC:H26	1
12	PFOZZ	9905011857975	19207	12339096	PLATE,IDENTIFICATIO NAME PLATE M1046..... UOC:H27	1
12	PFOZZ	9905013852639	19207	12343020	PLATE,IDENTIFICATIO NAME PLATE M1097A1..... UOC:AVY	1
12	PFOZZ	9905013872761	19207	12342986	PLATE,IDENTIFICATIO NAME PLATE M966A1..... UOC:A11	1
12	PFOZZ	9905013845311	19207	12342981	PLATE,IDENTIFICATIO NAME PLATE	1

(1) ITEM NO	(2) SMR CODE	(3) NSN	(4) CAGEC	(5) PART NUMBER	(6) DESCRIPTION AND USABLE ON CODES(UOC)	(7) QTY
					M998A1.....	
					UOC:A13	
12	PFOZZ	9905013872762	19207	12343044	PLATE,IDENTIFICATIO NAME PLATE	1
					M1038A1.....	
					UOC:A14	
12	PFOZZ	9905013871145	19207	12343010	PLATE,IDENTIFICATIO NAME PLATE	1
					M997A1.....	
					UOC:A15	
12	PFOZZ	9905013935622	19207	12343002	PLATE,IDENTIFICATIO NAME PLATE	1
					M1035A1.....	
					UOC:A20	
12	PFOZZ	9905013872752	19207	12342995	PLATE,IDENTIFICATIO NAME PLATE	1
					M1045A1.....	
12	PFOZZ	9905013939357	19207	12342997	PLATE,IDENTIFICATIO NAME PLATE	1
					M1043A1.....	
					UOC:A25	
12	PFOZZ	9905013935623	19207	12343050	PLATE,IDENTIFICATIO NAME PLATE	1
					M1044A1.....	
					UOC:A26	
12	PFOZZ	9905013871146	19207	12343046	PLATE,IDENTIFICATIO NAME PLATE	1
					M1046A1.....	
					UOC:A27	
12	PFOZZ	9905013872746	19207	12343023	PLATE,IDENTIFICATIO NAME PLATE	1
					M996A1.....	
					UOC:B16	
12	PFOZZ	9905013976974	19207	12342992	PLATE,IDENTIFICATIO NAME PLATE	1
					M1025A1.....	
					UOC:B17	
12	PFOZZ	9905013852633	19207	12343041	PLATE,IDENTIFICATIO NAME PLATE	1
					M1026A1.....	
					UOC:B18	
12	PFOZZ	7690014588254	19207	12446780	DECAL NAME PLATE M1097A2.....	1
					UOC:BVY	
12	PFOZZ	7690014505481	19207	12446798	DECAL NAME PLATE M997A2.....	1
					UOC:B15	
12	PFOZZ	9905014465770	19207	12446792	PLATE,IDENTIFICATIO NAME PLATE	1
					M1035A2.....	
					UOC:B20	
12	PFOZZ	9905014489786	19207	12446789	PLATE,IDENTIFICATIO NAME PLATE	1
					M1045A2.....	
					UOC:B24	
12	PFOZZ	9905014477799	19207	12446786	PLATE,IDENTIFICATIO NAME PLATE	1
					M1043A2.....	
					UOC:B25	
12	PFOZZ	9905014465769	19207	12446783	PLATE,IDENTIFICATIO NAME PLATE	1
					M1025A2.....	
					UOC:C17	
12	PFOZZ	7690014762855	34623	EX5061	DECAL NAME PLATE M1123.....	1
					UOC:NNN	
12	PFOZZ		19207	12469101	DECAL.....	1
					UOC:MMM	
13	PAOZZ	5320000835009	81349	M24243/1-A403	RIVET,BLIND 1/8 DIA.,.126-.187 GRIP	4
14	PFOZZ	7690013828471	19207	12343054	DECAL DRIVER SEAT ADJUSTMENT.....	1

(1) ITEM NO	(2) SMR CODE	(3) NSN	(4) CAGEC	(5) PART NUMBER	(6) DESCRIPTION AND USABLE ON CODES(UOC)	(7) QTY
					UOC:AVY,A11,A13,A14,A15,A20,A24,A25, A26,A27,BVY,B15,B16,B17,B18,B20,B24, B25,C17,NNN	
14	PAOZZ	9905012039995	19207	12339101	PLATE,INSTRUCTION DRIVER SEAT ADJUSTMENT..... UOC:HVY,H11,H13,H14,H15,H16,H17,H18, H20,H21,H24,H25,H26,H27,H28,MMM	1
15	PFOZZ	9905012058635	19207	12339109	PLATE,IDENTIFICATIO DEEP WATER FORDING..... UOC:AVY,A11,A13,A14,A15,A20,A24,A25, A26,A27,BVY,B15,B16,B17,B18,B20,B24, B25,C17,HVY,H11,H13,H14,H15,H16,H17, H18,H20,H21,H24,H25,H26,H27,H28,MMM, NNN	1
16	PAOZZ	7690014762842	34623	EX5079	DECAL BARCODE M1123..... UOC:NNN	1
17	PAOZZ	9905012039996	19207	12338475	PLATE,INSTRUCTION IGNITION..... UOC:AVY,A11,A13,A20,A24,BVY,B15,B20, B24,B25,C17,HVY,H11,H13,H14,H15,H16, H17,H18,H20,H21,H24,H25,H26,H27,H28, MMM,NNN	1
18	PAOZZ	7690012040076	19207	12339063	DECAL RIFLE,M16..... UOC:A11,A24,A25,A26,A27,H11,H24,H25, H26,H27,MMM	2
19	PFOZZ	9905012491612	19207	12340027	PLATE,INSTRUCTION NEUTRAL START....	1
20	PAOZZ	9905011857977	19207	12339105	PLATE,INSTRUCTION STEERING WHEEL LOCKING DEVICE.....	1
21	PAOZZ	7690012564908	19207	12340652	DECAL SPEEDOMETER.....	1
22	PAOZZ	7690012564909	19207	12340917	DECAL HAND THROTTLE CONTROL.....	1

END OF FIGURE

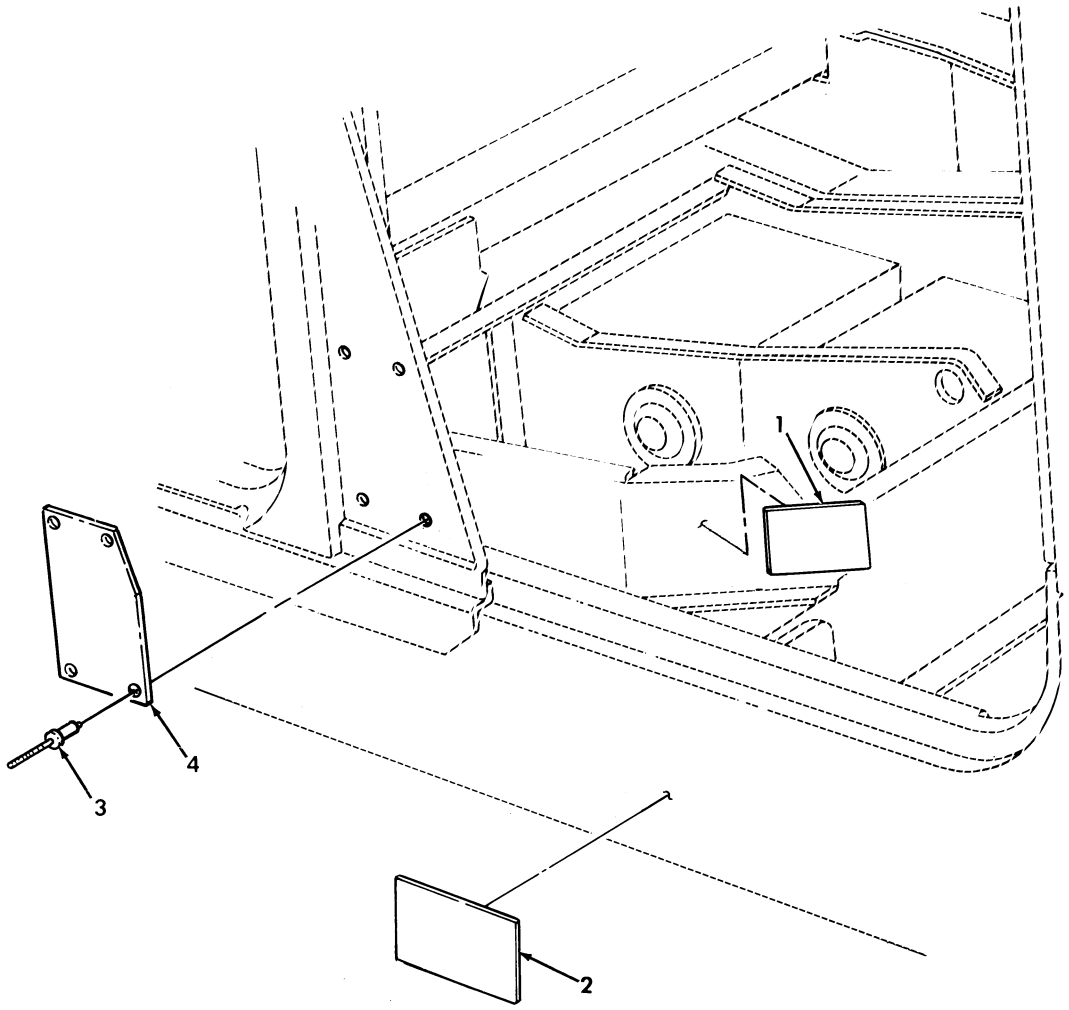

Figure 355. Data Plates, Battery Cable and Slave Receptacle.

(1) ITEM NO	(2) SMR CODE	(3) NSN	(4) CAGEC	(5) PART NUMBER	(6) DESCRIPTION AND USABLE ON CODES(UOC)	(7) QTY
					GROUP 2210 DATA PLATES AND INSTRUCTION HOLDERS	
					FIG. 355 DATA PLATES,BATTERY CABLE AND SLAVE RECEPTACLE	
1	PAOZZ	9905011853143	19207	12339107	PLATE,INSTRUCTION CONNECTING BATTERY CABLES.....	1
2	PFOZZ	9905011879468	19207	12339087	PLATE,INSTRUCTION SLAVE RECEPTACLE.	1
3	PAOZZ	5320000835009	81349	M24243/1-A403	RIVET,BLIND 1/8 DIA.,.126-.187 GRIP,USBL EFF 100,000 AND ABOVE.....	4
3	PAOZZ	5320010195694	81349	M24243/1A402	RIVET,BLIND 1/8 DIA.,.063-.125 GRIP,USBL EFF 1 THRU 99,999..... UOC:H11,H13,H14,H15,H16,H17,H18,H20, H21,H24,H25,H26,H27,H28,MMM	4
4	PAOZZ	9905013622014	19207	12342653	PLATE,IDENTIFICATIO WEIGHT AND DIMENSIONAL DATA..... UOC:HVY	1
4	PFOZZ	9905012489544	19207	12339900	PLATE,IDENTIFICATIO WEIGHT AND DIMENSIONAL DATA..... UOC:H13	1
4	PFOZZ	9905012481111	19207	12340653	PLATE,IDENTIFICATIO WEIGHT AND DIMENSIONAL DATA..... UOC:H16	1
4	PFOZZ	9905012481112	19207	12340322	PLATE,IDENTIFICATIO WEIGHT AND DIMENSIONAL DATA..... UOC:H11	1
4	PFOZZ	9905012489543	19207	12340321	PLATE,IDENTIFICATIO WEIGHT AND DIMENSIONAL DATA..... UOC:H17	1
4	PFOZZ	9905011857970	19207	12340323	PLATE,IDENTIFICATIO WEIGHT AND DIMENSIONAL DATA..... UOC:H15	1
4	PFOZZ	9905012481113	19207	12340318	PLATE,IDENTIFICATIO WEIGHT AND DIMENSIONAL DATA..... UOC:H18	1
4	PFOZZ	9905012481114	19207	12340320	PLATE,IDENTIFICATIO WEIGHT AND DIMENSIONAL DATA..... UOC:H20	1
4	PFOZZ	9905012489545	19207	12339987	PLATE,IDENTIFICATIO WEIGHT AND DIMENSIONAL DATA..... UOC:H21	1
4	PFOZZ	9905012489546	19207	12339901	PLATE,IDENTIFICATIO WEIGHT AND DIMENSIONAL DATA..... UOC:H14	1
4	PFOZZ	9905012489547	19207	12341836	PLATE,IDENTIFICATIO WEIGHT AND DIMENSIONAL DATA..... UOC:H28	1
4	PFOZZ	9905012489548	19207	12340324	PLATE,IDENTIFICATIO WEIGHT AND DIMENSIONAL DATA..... UOC:H25	1
4	PFOZZ	9905012489549	19207	12340325	PLATE,IDENTIFICATIO WEIGHT AND DIMENSIONAL DATA.....	1

(1) ITEM NO	(2) SMR CODE	(3) NSN	(4) CAGEC	(5) PART NUMBER	(6) DESCRIPTION AND USABLE ON CODES(UOC)	(7) QTY
					UOC:H26	
4	PFOZZ	9905012489552	19207	12340326	PLATE,INSTRUCTION WEIGHT AND DIMENSIONAL DATA.....	1
					UOC:H24	
4	PFOZZ	9905012481115	19207	12340327	PLATE,IDENTIFICATIO WEIGHT AND DIMENSIONAL DATA.....	1
					UOC:H27	
4	PFOZZ	9905013933795	19207	12342987	PLATE,IDENTIFICATIO WEIGHT AND DIMENSIONAL DATA.....	1
					UOC:A11	
4	PFOZZ	9905013925795	19207	12342980	PLATE,IDENTIFICATIO WEIGHT AND DIMENSIONAL DATA.....	1
					UOC:A13	
4	PFOZZ	9905013925794	19207	12343043	PLATE,INSTRUCTION WEIGHT AND DIMENSIONAL DATA.....	1
					UOC:A14	
4	PFOZZ	9905013925797	19207	12343011	PLATE,IDENTIFICATIO WEIGHT AND DIMENSIONAL DATA.....	1
					UOC:A15	
4	PFOZZ	9905013925798	19207	12343001	PLATE,IDENTIFICATIO WEIGHT AND DIMENSIONAL DATA.....	1
					UOC:A20	
4	PFOZZ	9905013925796	19207	12342993	PLATE,IDENTIFICATIO WEIGHT AND DIMENSIONAL DATA.....	1
					UOC:A24	
4	PFOZZ	9905013931830	19207	12342999	PLATE,IDENTIFICATIO IDENTIFICATION, WEIGHT AND DIMENSIONAL DATA.....	1
					UOC:A25	
4	PFOZZ	9905013925796	19207	12343049	PLATE,IDENTIFICATIO WEIGHT AND DIMENSIONAL DATA.....	1
					UOC:A26	
4	PFOZZ	9905013931833	19207	12343048	PLATE,IDENTIFICATIO WEIGHT AND DIMENSIONAL DATA.....	1
					UOC:A27	
4	PFOZZ	9905013937128	19207	12343018	PLATE,IDENTIFICATIO WEIGHT AND DIMENSIONAL DATA.....	1
					UOC:AVY	
4	PFOZZ	9905013925799	19207	12343025	PLATE,IDENTIFICATIO WEIGHT AND DIMENSIONAL DATA.....	1
					UOC:B16	
4	PFOZZ	9905013931834	19207	12342991	PLATE,IDENTIFICATIO WEIGHT AND DIMENSIONAL DATA.....	1
					UOC:B17	
4	PFOZZ	9905013925800	19207	12343040	PLATE,IDENTIFICATIO WEIGHT AND DIMENSIONAL DATA.....	1
					UOC:B18	
4	PFOZZ	9905014489783	19207	12446782	PLATE,INSTRUCTION WEIGHT AND DIMENSIONAL DATA.....	1
					UOC:BVY	
4	PFOZZ	9905014490476	19207	12446801	PLATE,INSTRUCTION WEIGHT AND DIMENSIONAL DATA.....	1
					UOC:B15	
4	PFOZZ	9905014465771	19207	12446794	PLATE,INSTRUCTION WEIGHT AND	1

(1) ITEM NO	(2) SMR CODE	(3) NSN	(4) CAGEC	(5) PART NUMBER	(6) DESCRIPTION AND USABLE ON CODES(UOC)	(7) QTY
					DIMENSIONAL DATA.....	
					UOC:B20	
4	PFOZZ	9905014465768	19207	12446791	PLATE,IDENTIFICATIO WEIGHT AND	1
					DIMENSIONAL DATA.....	
					UOC:B24	
4	PFOZZ	9905014489784	19207	12446788	PLATE,INSTRUCTION WEIGHT AND	1
					DIMENSIONAL DATA.....	
					UOC:B25	
4	PFOZZ	9905014466187	19207	12446785	PLATE,INSTRUCTION WEIGHT AND	1
					DIMENSIONAL DATA.....	
					UOC:C17	
4	PFOZZ		19207	12469100	DECAL.....	1
					UOC:MMM	
4	PFOZZ		34623	EX5062	PLATE,INSTRUCTION.....	1
					UOC:NNN	

END OF FIGURE

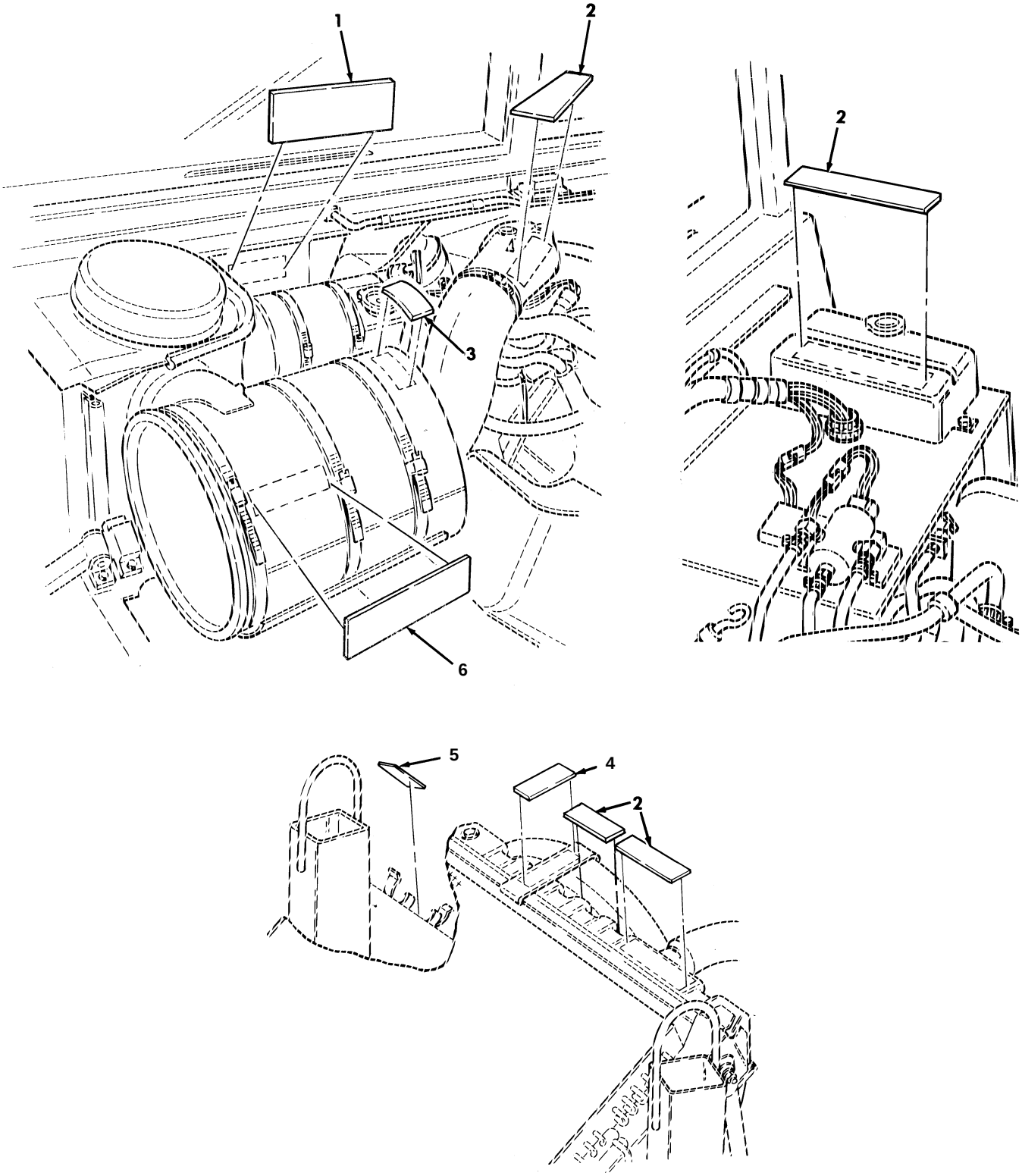

Figure 356. Data Plates, Surge Tank, Fan Shroud, and Cook Stove.

(1) ITEM NO	(2) SMR CODE	(3) NSN	(4) CAGEC	(5) PART NUMBER	(6) DESCRIPTION AND USABLE ON CODES(UOC)	(7) QTY
					GROUP 2210 DATA PLATES AND INSTRUCTION HOLDERS	
					FIG. 356 DATA PLATES,SURGE TANK,FAN SHROUD,AND COOK STOVE	
1	PAOZZ	7690012090864	19207	12339065	MARKER,IDENTIFICATI SURGE TANK.....	1
2	PAOZZ	9905012489550	19207	12339055	PLATE,INSTRUCTION NO STEP.....	4
3	PAOZZ	7690014734550	34623	EX4319	DECAL SERPENTINE BELT..... UOC:BVY,B15,B20,B24,B25,C17,NNN	1
4	PAOZZ	7690011975500	19207	12339064	DECAL FAN SHROUD.....	2
5	PAOZZ	7690011885144	19207	12340909	MARKER,IDENTIFICATI GASOLINE BURNER STOVE STOWAGE..... UOC:A11,A24,A27,H11,H24,H27,MMM	1
6	PAOZZ	9905012489551	34623	5590177	PLATE,INSTRUCTION NO STEP.....	1

END OF FIGURE

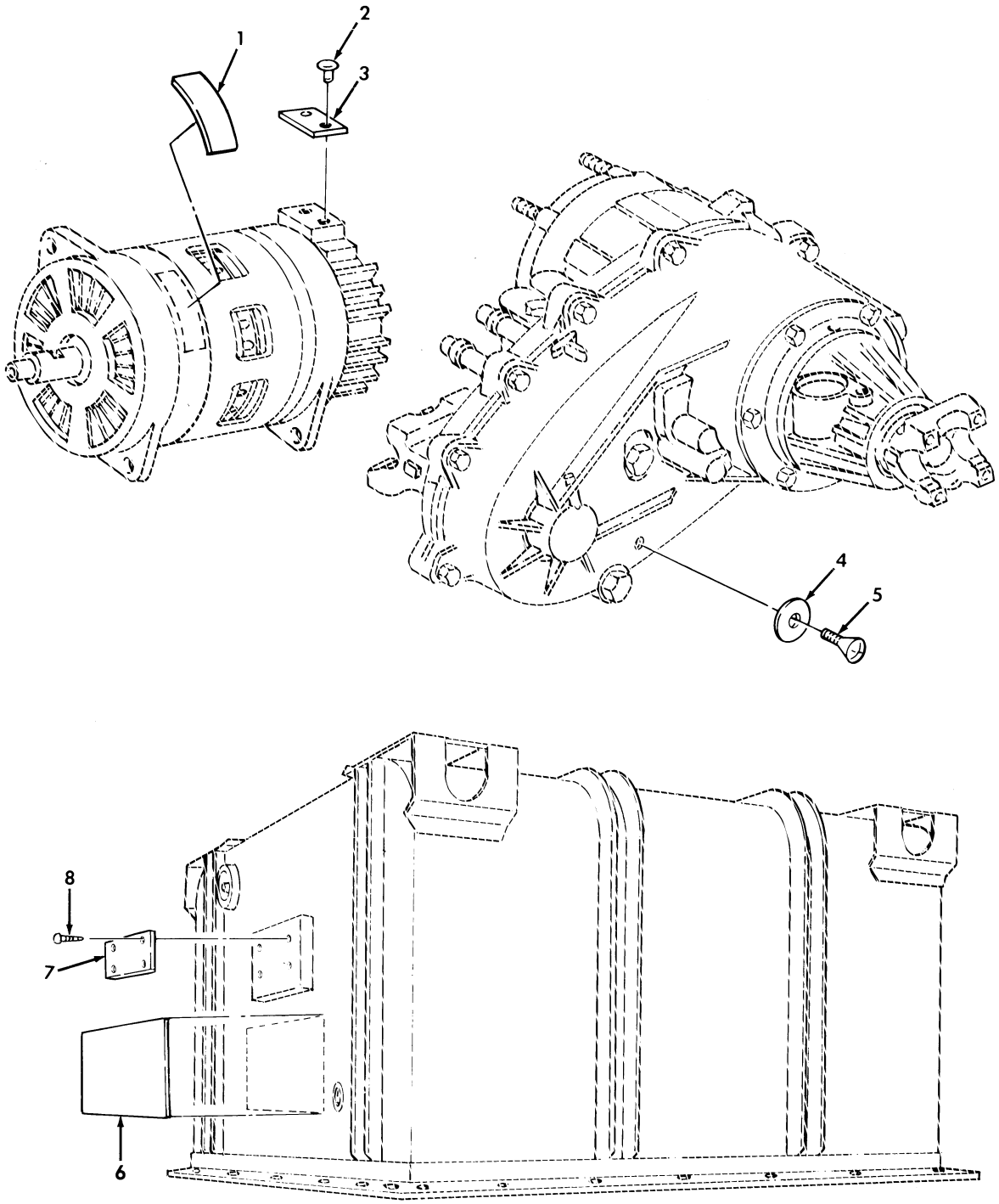

Figure 357. Data Plates, Generator, Transfer Case, and Engine Container.

(1) ITEM NO	(2) SMR CODE	(3) NSN	(4) CAGEC	(5) PART NUMBER	(6) DESCRIPTION AND USABLE ON CODES(UOC)	(7) QTY
					GROUP 2210 DATA PLATES AND INSTRUCTION HOLDERS	
					FIG. 357 DATA PLATES,GENERATOR, TRANSFER CASE,AND ENGINE CONTAINER	
1	PAOZZ	7690011975500	19207	12339064	DECAL FAN SHROUD.....	1
2	PAOZZ	5320009572500	96906	MS20604B4W1	RIVET,BLIND 1/8 DIA.,.015-.062 GRIP	2
3	PFOZZ	9905011819456	19207	11630585	PLATE,INSTRUCTION.....	1
4	PFOZZ	9905011587981	34623	5741083	PLATE,IDENTIFICATIO TRANSFER CASE..	1
5	PAOZZ	5305012117415	34623	5741084	SCREW,CAP,HEXAGON H #10-32 X 1/4...	1
6	PAOZZ	7690012818341	19207	12338072	DECAL ENGINE CONTAINER.....	1
7	PAOZZ	9905009012942	19207	7973326	PLATE,IDENTIFICATIO ENGINE CONTAINER.....	1
8	PAOZZ	5305002535627	80205	MS21318-48	SCREW,DRIVE #10-8 X 5/8.....	4

END OF FIGURE

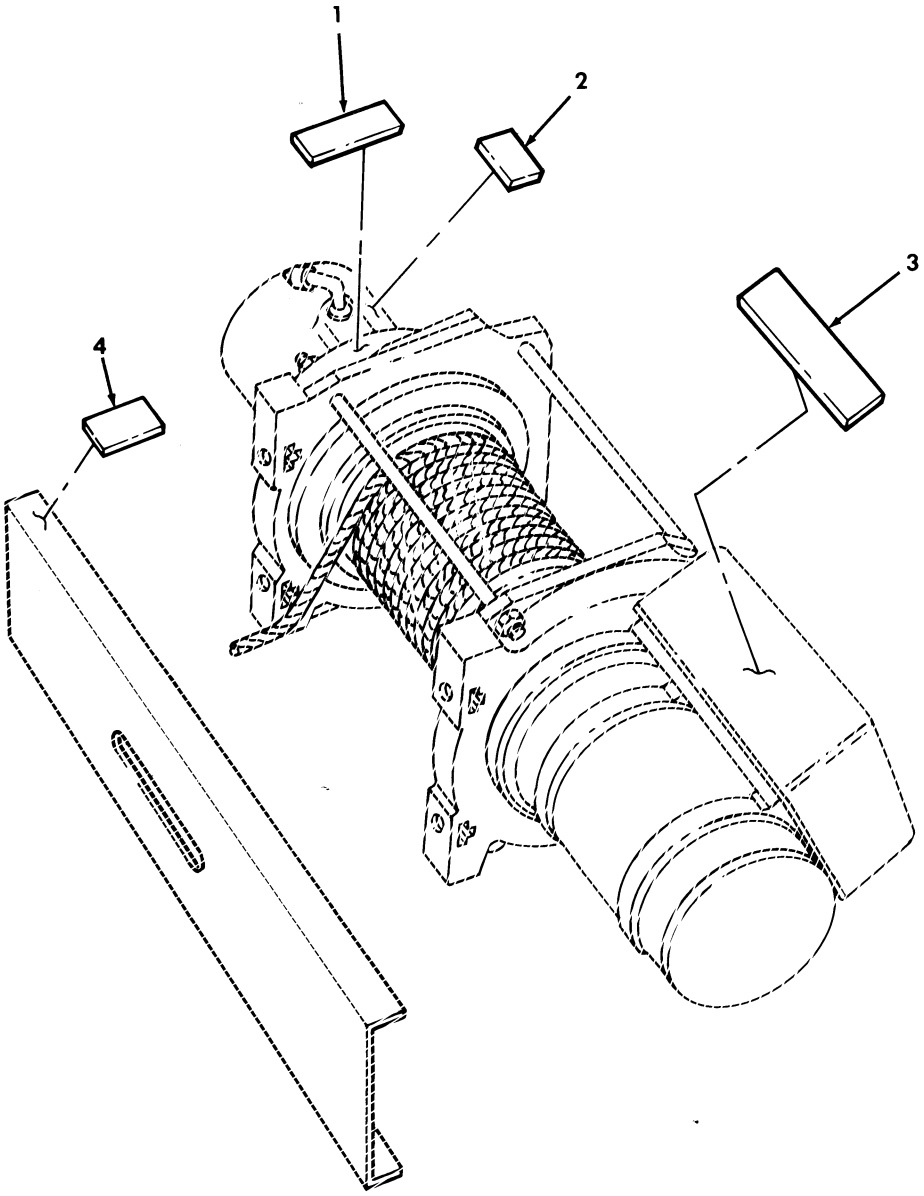

Figure 358. Data Plates, Winch.

(1) ITEM NO	(2) SMR CODE	(3) NSN	(4) CAGEC	(5) PART NUMBER	(6) DESCRIPTION AND USABLE ON CODES(UOC)	(7) QTY
					GROUP 2210 DATA PLATES AND INSTRUCTION HOLDERS	
					FIG. 358 DATA PLATES,WINCH	
1	PAOZZ	7690011853208	27647	15657	MARKER,IDENTIFICATI..... UOC:A14,A26,A27,B18,H14,H18,H26,H27, H28	1
2	PFOZZ	9905011853127	27647	15873	PLATE,INSTRUCTION..... UOC:A14,A26,A27,B18,H14,H18,H26,H27, H28	1
3	PAOZZ	9905011853207	27647	13698	PLATE,INSTRUCTION..... UOC:A14,A26,A27,B18,H14,H18,H26,H27, H28	1
4	PAOZZ	7690012646536	19207	12340923	DECAL WINCH OPERATION, USBL EFF 1 THRU 99,999..... UOC:H14,H18,H26,H27,H28	1
4	PAOZZ	7690013502094	19207	12342439	MARKER,IDENTIFICATI WARNING,WINCH OPERATION USBL EFF 100,000 AND ABOVE UOC:A14,A26,A27,B18,H14,H18,H26,H27, H28	1

END OF FIGURE

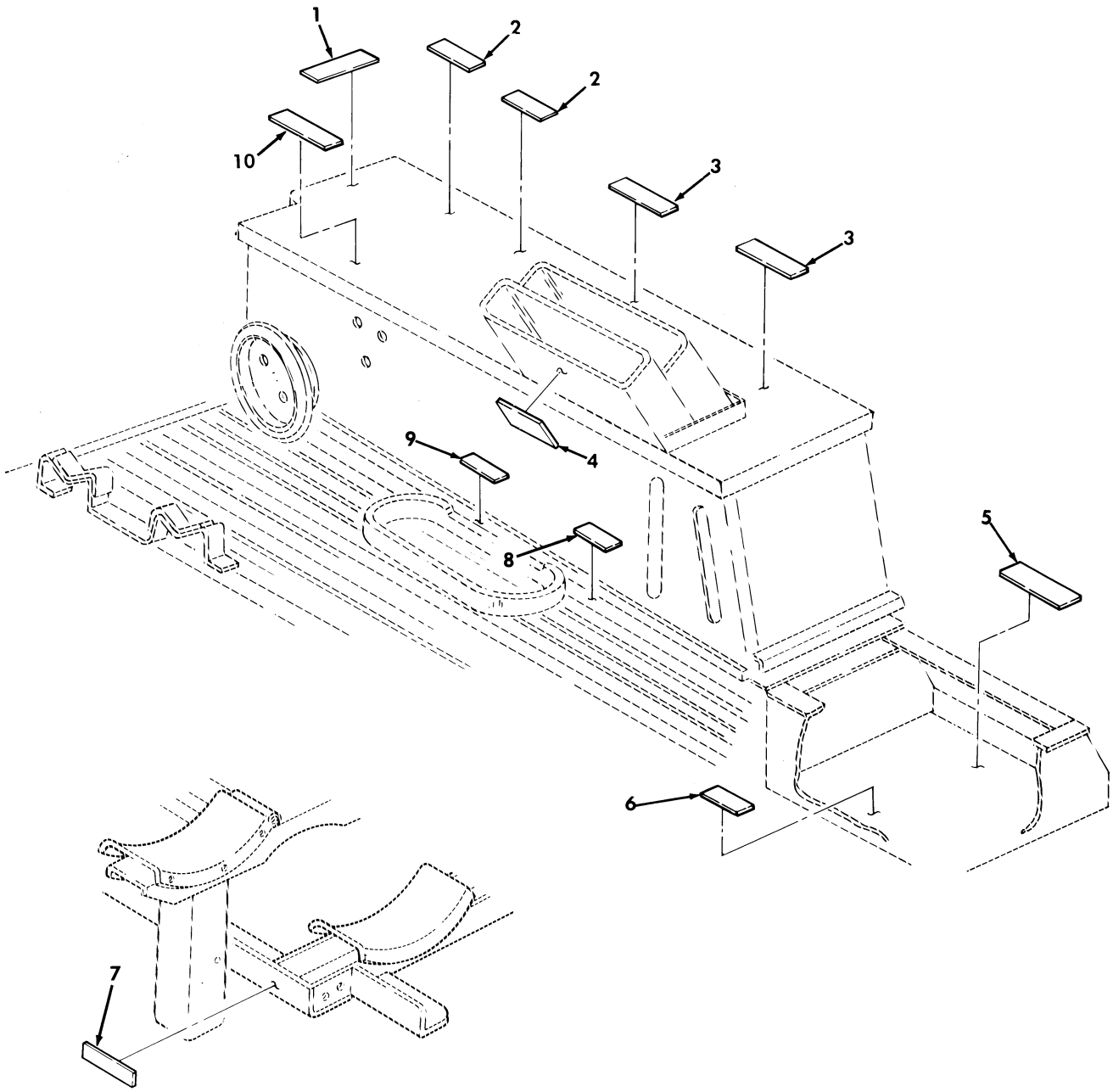

Figure 359. Data Plates, TOW Carrier.

(1) ITEM NO	(2) SMR CODE	(3) NSN	(4) CAGEC	(5) PART NUMBER	(6) DESCRIPTION AND USABLE ON CODES(UOC)	(7) QTY
					GROUP 2210 DATA PLATES AND INSTRUCTION HOLDERS	
					FIG. 359 DATA PLATES,TOW CARRIER	
1	PAOZZ	7690011911313	19207	12340898	MARKER,IDENTIFICATI TELEPHONE STOWAGE..... UOC:A11,A24,A27,B24,H11,H24,H27,MMM	1
2	PAOZZ	7690011893740	19207	12340899	MARKER,IDENTIFICATI COMBAT RATIONS STOWAGE..... UOC:A11,A24,A27,B24,H11,H24,H27,MMM	2
3	PAOZZ	7690011926371	19207	12340901	MARKER,IDENTIFICATI M-16 AMMUNITION STOWAGE..... UOC:A11,A24,A27,B24,H11,H24,H27,MMM	2
4	PAOZZ	7690011918793	19207	12340890	MARKER,IDENTIFICATI MGS BATTERY STOWAGE..... UOC:A11,A24,A27,B24,H11,H24,H27,MMM	1
5	PAOZZ	7690011908501	19207	12340904	MARKER,IDENTIFICATI CBR OVERGARMENTS STOWAGE..... UOC:A11,A24,A27,B24,H11,H24,H27,MMM	1
6	PAOZZ	7690011911312	19207	12340908	MARKER,IDENTIFICATI CHEMICAL MASK STOWAGE..... UOC:A11,A24,A27,B24,H11,H24,H27,MMM	1
7	PAOZZ	7690011916467	19207	12339764	MARKER,IDENTIFICATI NOSE END MISSILE RACK..... UOC:A11,A24,A27,B24,H11,H24,H27,MMM	1
8	PAOZZ	7690011911316	19207	12340903	MARKER,IDENTIFICATI WATER CAN STOWAGE..... UOC:A11,A24,A27,B24,H11,H24,H27,MMM	1
9	PAOZZ	7690011911315	19207	12340902	MARKER,IDENTIFICATI FUEL CAN..... UOC:A11,A24,A27,B24,H11,H24,H27,MMM	1
10	PAOZZ	7690011911314	19207	12340900	MARKER,IDENTIFICATI CABLE REEL STOWAGE..... UOC:A11,A24,A27,B24,H11,H24,H27,MMM	1

END OF FIGURE

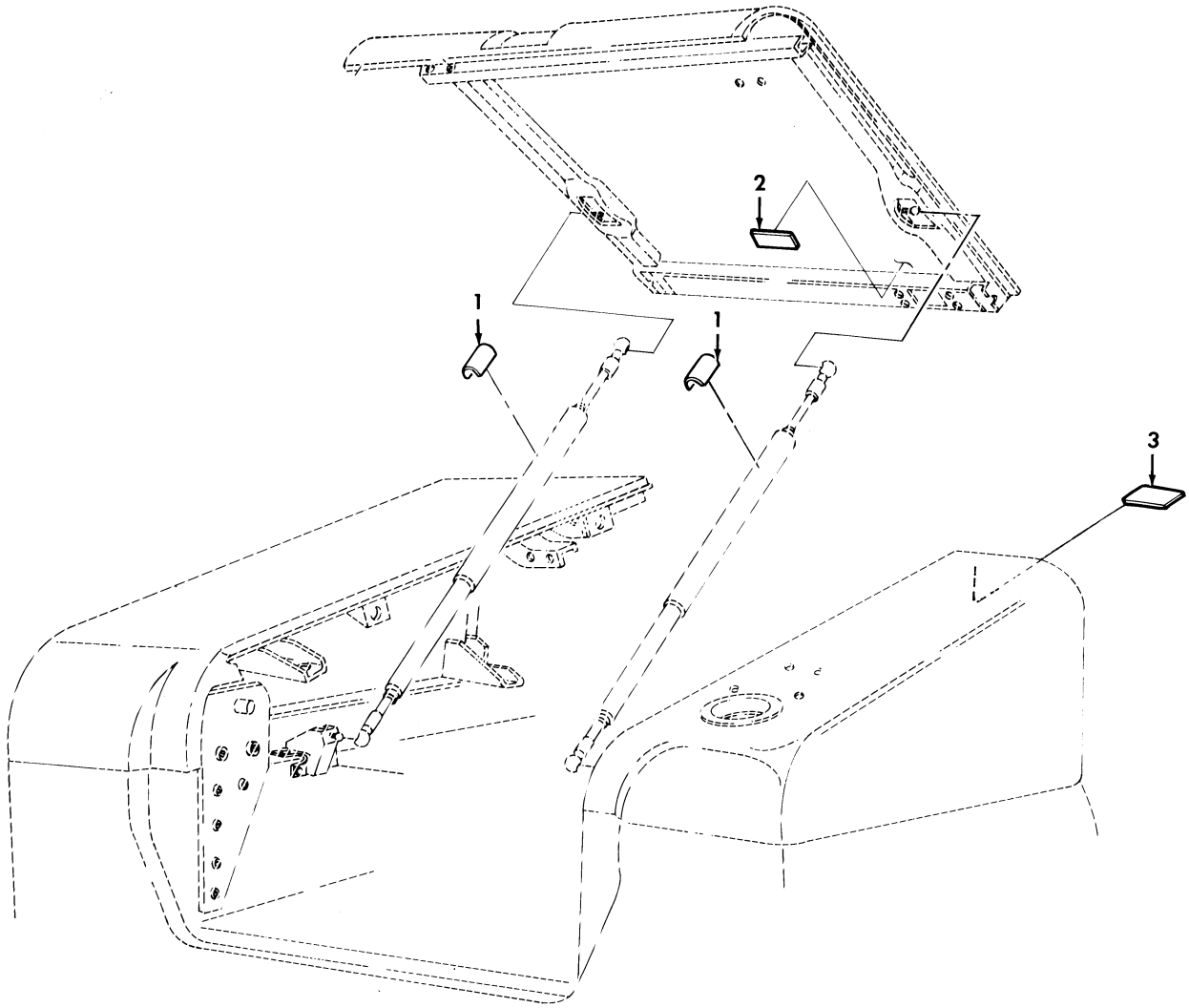

Figure 360. Data Plates, TOW Carrier.

(1) ITEM NO	(2) SMR CODE	(3) NSN	(4) CAGEC	(5) PART NUMBER	(6) DESCRIPTION AND USABLE ON CODES(UOC)	(7) QTY
					GROUP 2210 DATA PLATES AND INSTRUCTION HOLDERS	
					FIG. 360 DATA PLATES,TOW CARRIER	
1	PAOZZ	7690012047785	19207	12340814	DECAL NO HAND HOLD..... UOC:A11,A24,A25,A26,A27,B17,B18,B24, B25,C17,H11,H17,H18,H24,H25,H26,H27, MMM	2
2	PAOZZ	7690012047847	19207	12340852	MARKER,IDENTIFICATI..... UOC:A11,A24,A27,B24,H11,H13,H14,H15, H16,H17,H18,H20,H21,H24,H25,H26,H27, MMM	1
3	PAOZZ	7690011908501	19207	12340904	MARKER,IDENTIFICATI CBR OVER GARMENTS..... UOC:A11,A24,A25,A26,A27,B17,B18,B24, B25,C17,H11,H17,H18,H24,H25,H26,H27, MMM	2

END OF FIGURE

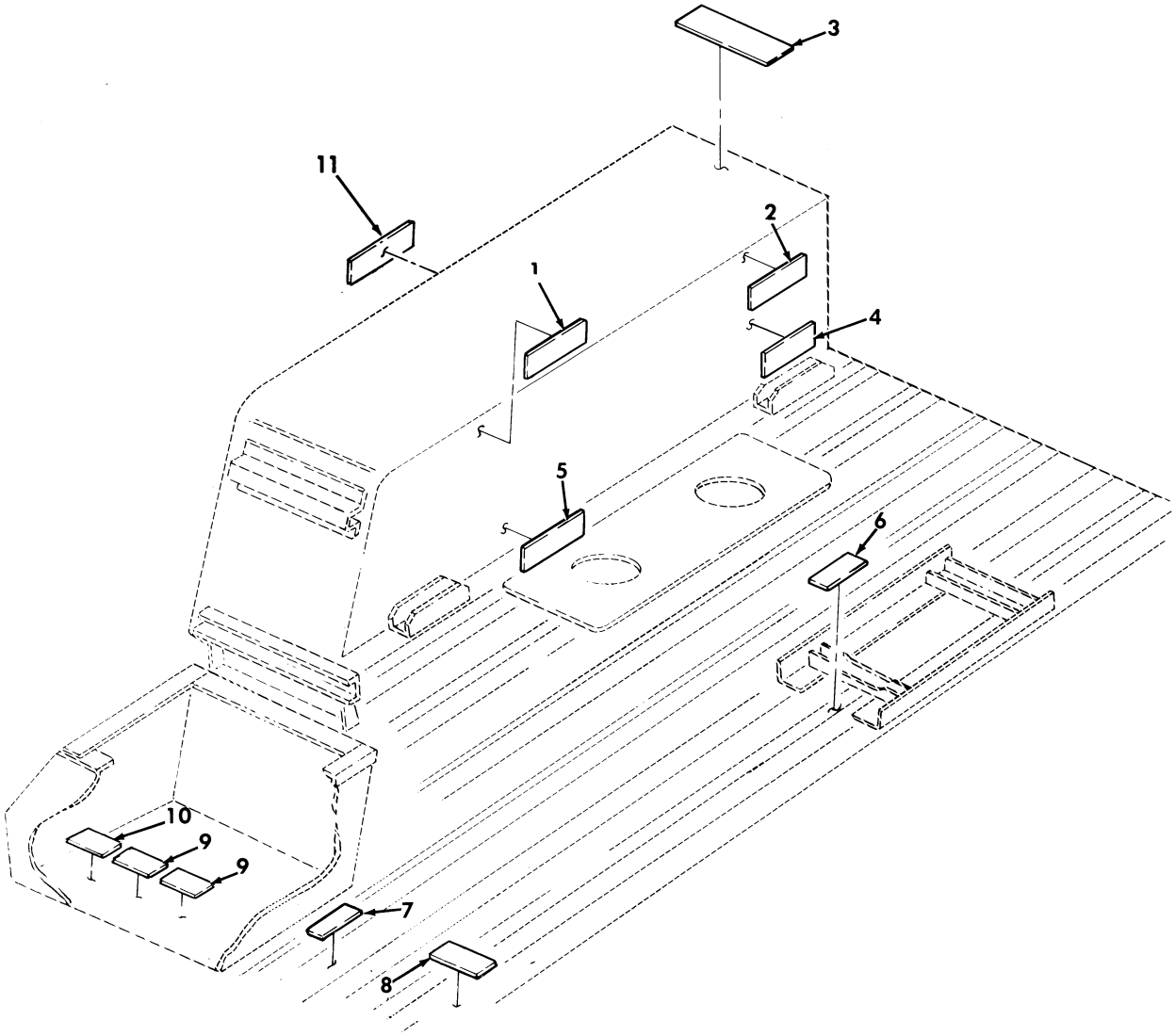

Figure 361. Data Plates, Sights, Traversing Unit, Night Vision Goggles, and Radiac Meter.

(1) ITEM NO	(2) SMR CODE	(3) NSN	(4) CAGEC	(5) PART NUMBER	(6) DESCRIPTION AND USABLE ON CODES(UOC)	(7) QTY
					GROUP 2210 DATA PLATES AND INSTRUCTION HOLDERS	
					FIG. 361 DATA PLATES,SIGHTS,TRAVERSING UNIT,NIGHT VISION GOGGLES,AND RADIAC METER	
1	PAOZZ	7690011893738	19207	12340894	MARKER,IDENTIFICATI NIGHT SIGHT STOWAGE..... UOC:A11,A24,A27,B24,H11,H24,H27,MMM	1
2	PAOZZ	7690011893737	19207	12340891	MARKER,IDENTIFICATI BORESIGHT COLLIMATOR STOWAGE..... UOC:A11,A24,A27,B24,H11,H24,H27,MMM	1
3	PAOZZ	7690011893740	19207	12340899	MARKER,IDENTIFICATI COMBAT RATIONS. UOC:A11,A24,A27,B24,H11,H24,H27,MMM	1
4	PAOZZ	7690012030161	19207	12340896	DECAL NIGHT SIGHT BATTERY STOWAGE.. UOC:A11,A24,A27,B24,H11,H24,H27,MMM	1
5	PAOZZ	7690011893739	19207	12340897	MARKER,IDENTIFICATI NIGHT SIGHT COOLANT STOWAGE..... UOC:A11,A24,A27,B24,H11,H24,H27,MMM	1
6	PAOZZ	7690011893736	19207	12340893	MARKER,IDENTIFICATI DAYSIGHT STOWAGE..... UOC:A11,A24,A27,B24,H11,H24,H27,MMM	1
7	PAOZZ	7690012047849	19207	12340895	MARKER,IDENTIFICATI TRAVERSING UNIT UOC:A11,A24,A27,B24,H11,H24,H27,MMM	1
8	PAOZZ	7690012047850	19207	12340892	MARKER,IDENTIFICATI MISSILE GUIDANCE SYSTEM (MGS)..... UOC:A11,A24,A27,B24,H11,H24,H27,MMM	1
9	PAOZZ	7690011926370	19207	12340906	MARKER,IDENTIFICATI NIGHT VISION GOGGLES STOWAGE..... UOC:A11,A24,A27,B24,H11,H24,H27,MMM	2
10	PAOZZ	7690011926369	19207	12340905	MARKER,IDENTIFICATI RADIAC METER STOWAGE..... UOC:A11,A24,A27,B24,H11,H24,H27,MMM	1
11	PFOZZ	7690013589391	19207	12342625	MARKER,IDENTIFICATI TIRE PRESSURE, 42 PSI..... UOC:HVY	2
11	PAOZZ	7690014450456	19207	12446734	MARKER,IDENTIFICATI TIRE PRESSURE, 40 PSI..... UOC:AVY,BVY	1

END OF FIGURE

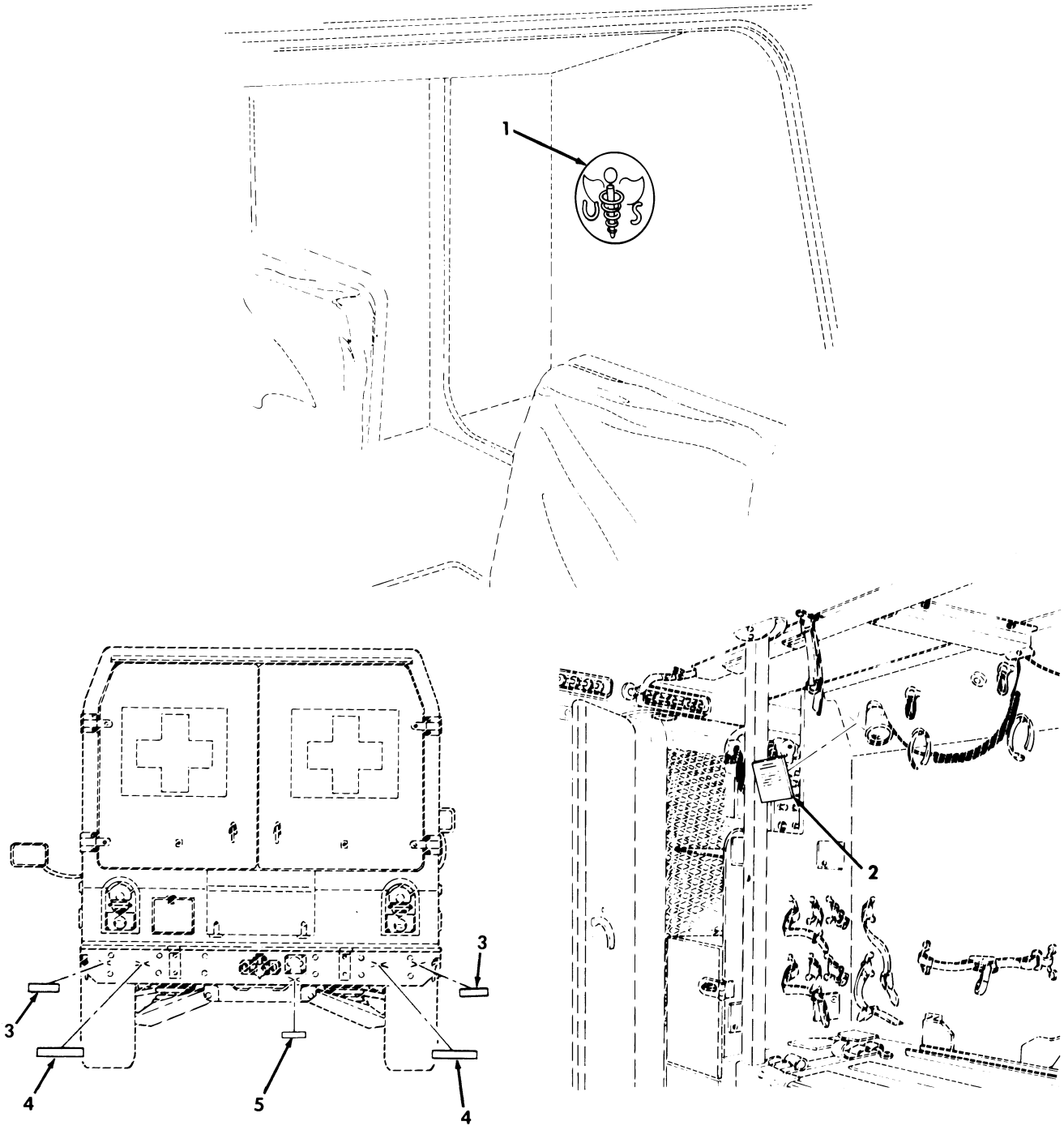

Figure 362. Data Plates and Identification Tags, M996, M996A1, M997, M997A1, and M997A2 Ambulance.

(1) ITEM NO	(2) SMR CODE	(3) NSN	(4) CAGEC	(5) PART NUMBER	(6) DESCRIPTION AND USABLE ON CODES(UOC)	(7) QTY
					GROUP 2210 DATA PLATES AND INSTRUCTION HOLDERS	
					FIG. 362 DATA PLATES AND IDENTIFICATION TAGS,M996,M996A1,M997,M997A1, AND M997A2 AMBULANCE	
1	PAOZZ	7690001385788	19207	11644801	DECAL ARMY MEDICAL SERVICE INSIGNIA UOC:A15,B15,B16,H15,H16	1
2	PAOZZ	9905012663913	19207	12341757	PLATE,INSTRUCTION HEATER AND VENT OPERATING INSTRUCTIONS..... UOC:A15,B15,B16,H15,H16	1
3	PAOZZ	7690012651133	19207	12339057	DECAL SLING..... UOC:A15,B15,B16,H15,H16	2
4	PAOZZ	7690012651134	19207	12339059	DECAL TIEDOWN..... UOC:A15,B15,B16,H15,H16	2
5	PAOZZ	7690012651135	19207	12339060	DECAL 24 VOLTS..... UOC:A15,B15,B16,H15,H16	1

END OF FIGURE

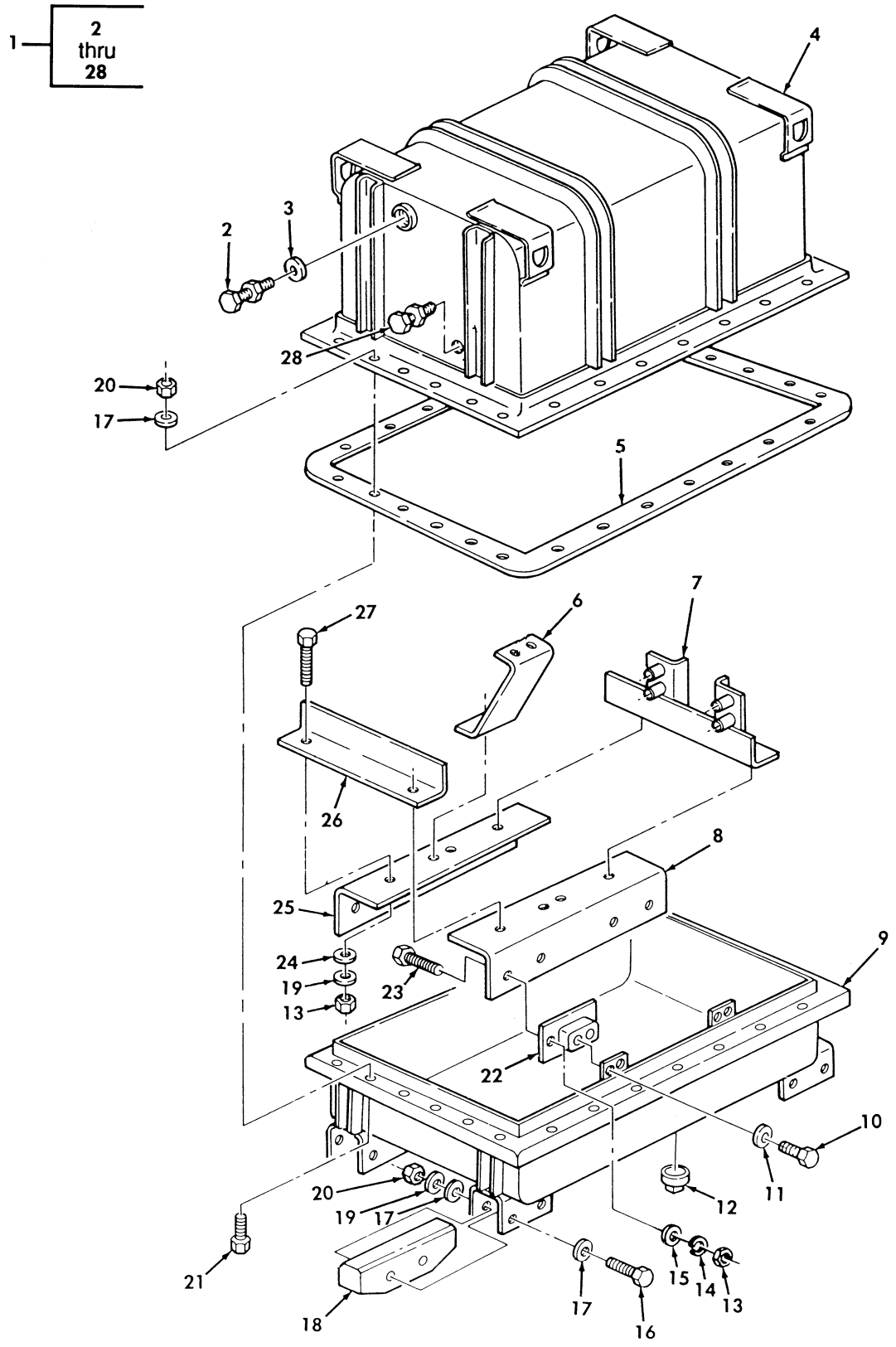

Figure 363. Engine Shipping Container Assembly.

(1) ITEM NO	(2) SMR CODE	(3) NSN	(4) CAGEC	(5) PART NUMBER	(6) DESCRIPTION AND USABLE ON CODES(UOC)	(7) QTY
					GROUP 33 SPECIAL PURPOSE KITS	
					3301 REUSABLE SHIPPING CONTAINER	
					FIG. 363 ENGINE SHIPPING CONTAINER ASSEMBLY	
1	PFFFF	8145012313747	19207	12338064	SHIPPING AND STORAG CONTAINER, ENGINE.....	1
2	PAFZZ	2520012681051	19207	12338078	.BREATHER.....	1
3	PAFZZ	4820010052994	01347	330-10-10R	.VALVE,PRESSURE EQUA.....	1
4	XAFZZ		19207	12338066	.CONTAINER,UPPER.....	1
5	PAFZZ	5330012646537	19207	12338073	.RUBBER ROUND SECTIO CONTAINER ASSEMBLY.....	1
6	PFFZZ	5340012646544	19207	12338068	.BRACKET,DOUBLE ANGL ENGINE SUPPORT	2
7	PFFZZ	5340012713059	19207	12338067	.BRACKET,MOUNTING ENGINE SUPPORT...	1
8	PFFZZ	5340012646540	19207	12338074	.BRACKET,ANGLE LEFT.....	1
9	XAFZZ		19207	12338065	.CONTAINER,LOWER.....	1
10	PAFZZ	5305002693233	80204	B1821BH038F063N	.SCREW,CAP,HEXAGON H 3/8-24 X 5/8..	8
11	PAFZZ	5310006379541	96906	MS35338-46	.WASHER,LOCK 3/8.....	8
12	PAFZZ	4730002212140	96906	MS20913-6S	.PLUG,PIPE 3/4-14.....	1
13	PAFZZ	5310008807744	96906	MS51967-5	.NUT,PLAIN,HEXAGON 5/16-18.....	8
14	PAFZZ	5310004079566	96906	MS35338-45	.WASHER,LOCK 5/16.....	8
15	PAFZZ	5310000814219	96906	MS27183-12	.WASHER,FLAT 11/32.....	8
16	PAFZZ	5305000712083	80204	B1821BH050C500N	.SCREW,CAP,HEXAGON H 1/2-13 X 5.00.	8
17	PAFZZ	5310008095998	96906	MS27183-18	.WASHER,FLAT 17/32.....	42
18	PAFZZ	5340012653676	19207	12338071	.RUNNER,METAL.....	4
19	PAFZZ	5310005845272	96906	MS35338-48	.WASHER,LOCK 1/2.....	16
20	PAFZZ	5310007680318	21439	01857-007	.NUT,PLAIN,HEXAGON 1/2-13.....	42
21	PAFZZ	5305007320511	80204	B1821BH050C113N	.SCREW,CAP,HEXAGON H 1/2-13 X 1-1/8	26
22	PFFZZ	5342012646543	19207	12338070	.MOUNT,RESILIENT.....	4
23	PAFZZ	5306002264828	80204	B1821BH031C113N	.BOLT,MACHINE 5/16-18 X 1-1/8.....	8
24	PAFZZ	5310008093079	96906	MS27183-19	.WASHER,FLAT 9/16.....	8
25	PFFZZ	5340012646541	19207	12338075	.BRACKET,ANGLE.....	1
26	PFFZZ	5340012653674	19207	12338076	.BRACKET,ANGLE.....	1
27	PAFZZ	5305000712069	80204	B1821BH050C150N	.SCREW,CAP,HEXAGON H 1/2-13 X 1-1/2	8
28	PAFZZ	6685006181822	00334	SK2155	.INDICATOR,HUMIDITY.....	1

END OF FIGURE

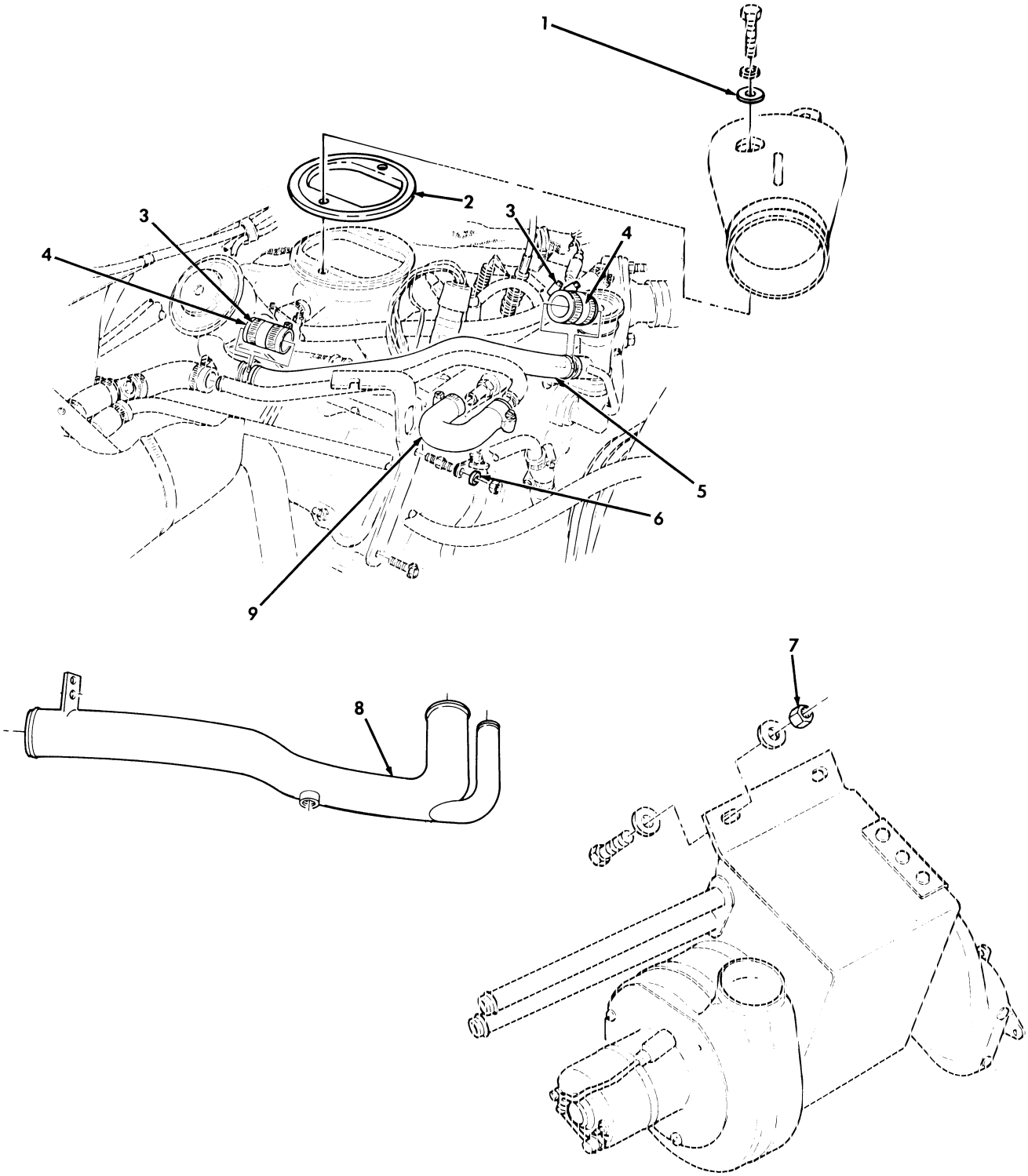

Figure 364. Arctic Kit, Fuel Injection Pump, Engine Gaskets, and CDR Tube.

(1) ITEM NO	(2) SMR CODE	(3) NSN	(4) CAGEC	(5) PART NUMBER	(6) DESCRIPTION AND USABLE ON CODES(UOC)	(7) QTY
					GROUP 3303 WINTERIZATION KITS	
					FIG. 364 ARCTIC KIT,FUEL INJECTION PUMP,ENGINE GASKETS,AND CDR TUBE	
1	PAOZZ	5310011857214	19207	12339052	WASHER,FLAT PART OF KIT P/N 5705698. UOC:AVY,A11,A13,A14,A15,A20,A24,A25, A26,A27,B16,B17,B18,HVY,H11,H13,H14, H15,H16,H17,H18,H20,H21,H24,H25,H26, H27,H28,MMM	2
2	PAOZZ	5330012461822	19207	12338382	GASKET PART OF KIT P/N 5705698..... UOC:AVY,A11,A13,A14,A15,A20,A24,A25, A26,A27,B16,B17,B18,HVY,H11,H13,H14, H15,H16,H17,H18,H20,H21,H24,H25,H26, H27,H28,MMM	1
3	PAOZZ	4730009083193	66295	WWD48-58H	CLAMP,HOSE PART OF KIT P/N 5705698.. UOC:AVY,A11,A13,A14,A15,A20,A24,A25, A26,A27,B16,B17,B18,HVY,H11,H13,H14, H15,H16,H17,H18,H20,H21,H24,H25,H26, H27,H28,MMM	2
4	PAOZZ	4720012111998	19207	12340492	HOSE,NONMETALLIC PART OF KIT P/N 5705698..... UOC:AVY,A11,A13,A14,A15,A20,A24,A25, A26,A27,B16,B17,B18,HVY,H11,H13,H14, H15,H16,H17,H18,H20,H21,H24,H25,H26, H27,H28,MMM	2
5	PFOZZ	4710012572649	19207	12340498	TUBE ASSEMBLY,METAL PART OF KIT P/N 5705698..... UOC:AVY,A11,A13,A14,A15,A20,A24,A25, A26,A27,B16,B17,B18,HVY,H11,H13,H14, H15,H16,H17,H18,H20,H21,H24,H25,H26, H27,H28,MMM	1
6	PAOZZ	5310012067306	7X677	11500207	WASHER,LOCK PART OF KIT P/N 5705698. UOC:AVY,A11,A13,A14,A15,A20,A24,A25, A26,A27,B16,B17,B18,HVY,H11,H13,H14, H15,H16,H17,H18,H20,H21,H24,H25,H26, H27,H28,MMM	1
7	PAOZZ	5310008140673	96906	MS51943-33	NUT,SELF-LOCKING,HE 5/16-18 PART OF KIT P/N 5705698..... UOC:AVY,A11,A13,A14,A15,A20,A24,A25, A26,A27,B16,B17,B18,HVY,H11,H13,H14, H15,H16,H17,H18,H20,H21,H24,H25,H26, H27,H28,MMM	1
8	PAOZZ	4710011880028	34623	5578604	TUBE,BENT,METALLIC PART OF KIT P/N 5705698..... UOC:AVY,A11,A13,A14,A15,A20,A24,A25, A26,A27,B16,B17,B18,HVY,H11,H13,H14, H15,H16,H17,H18,H20,H21,H24,H25,H26, H27,H28,MMM	1
9	PFOZZ	4720012572655	19207	12340493	HOSE,PREFORMED PART OF KIT P/N 5705698..... UOC:AVY,A11,A13,A14,A15,A20,A24,A25, A26,A27,B16,B17,B18,HVY,H11,H13,H14,	1

(1) ITEM NO	(2) SMR CODE	(3) NSN	(4) CAGEC	(5) PART NUMBER	(6) DESCRIPTION AND USABLE ON CODES(UOC)	(7) QTY
					H15,H16,H17,H18,H20,H21,H24,H25,H26, H27,H28,MMM	

END OF FIGURE

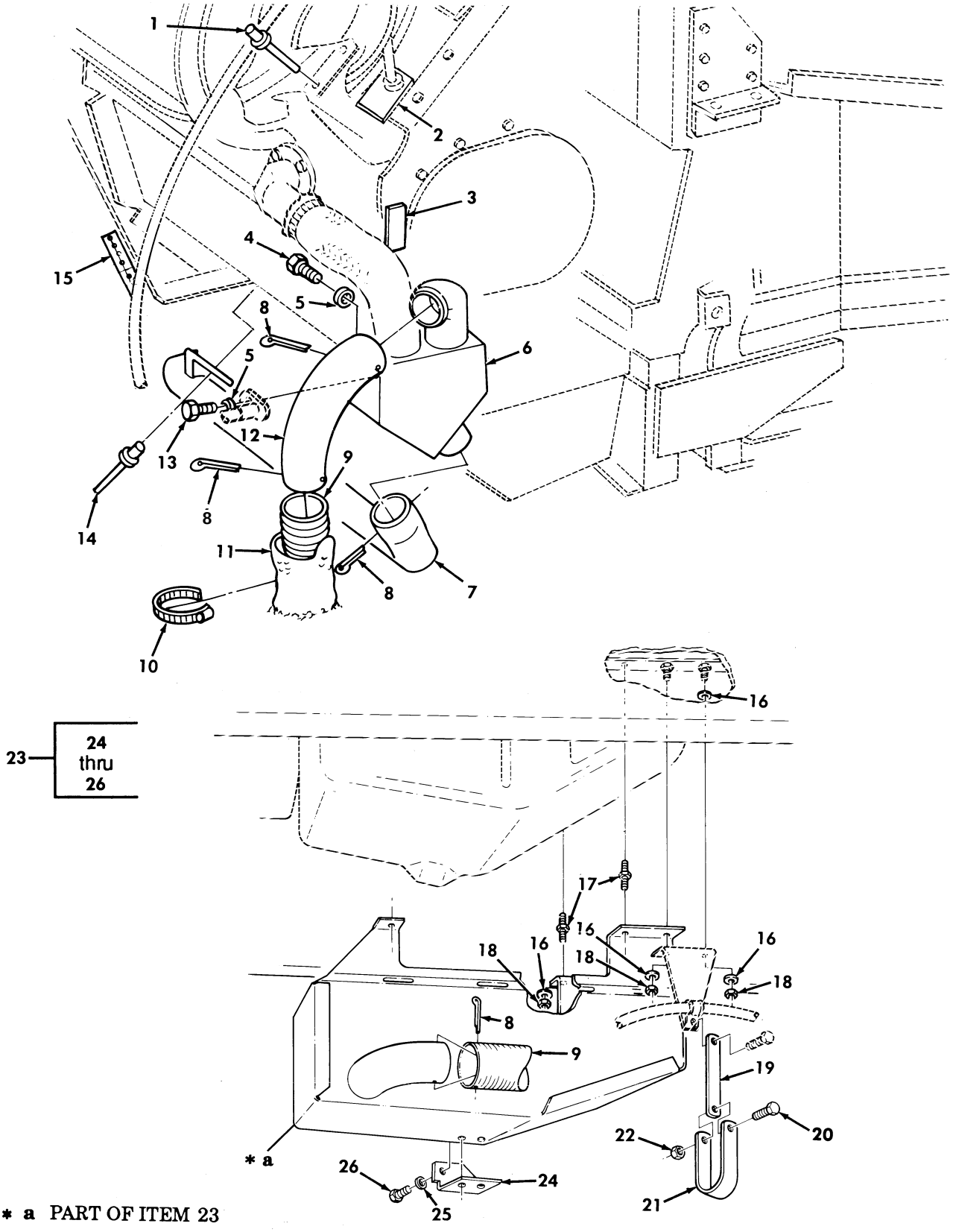

* a PART OF ITEM 23

Figure 365. Arctic Kit, Pan Cover and Heater Tube.

(1) ITEM NO	(2) SMR CODE	(3) NSN	(4) CAGEC	(5) PART NUMBER	(6) DESCRIPTION AND USABLE ON CODES(UOC)	(7) QTY
					GROUP 3303 WINTERIZATION KITS	
					FIG. 365 ARCTIC KIT,PAN COVER AND HEATER TUBE	
1	PAOZZ	5320011357319	11815	CR-213-6-3	RIVET,BLIND PART OF KIT P/N 5705698. UOC:AVY,A11,A13,A14,A15,A20,A24,A25, A26,A27,B16,B17,B18,HVY,H11,H13,H14, H15,H16,H17,H18,H20,H21,H24,H25,H26, H27,H28,MMM	2
2	KFFZZ		19207	12340722	TEMPLATE PART OF KIT P/N 5705698.... UOC:AVY,A11,A13,A14,A15,A20,A24,A25, A26,A27,B16,B17,B18,HVY,H11,H13,H14, H15,H16,H17,H18,H20,H21,H24,H25,H26, H27,H28,MMM	1
3	KFFZZ		19207	12342103	TEMPLATE PART OF KIT P/N 5705698.... UOC:AVY,A11,A13,A14,A15,A20,A24,A25, A26,A27,B16,B17,B18,HVY,H11,H13,H14, H15,H16,H17,H18,H20,H21,H24,H25,H26, H27,H28,MMM	2
4	PAOZZ	5305000680508	80204	B1821BH025C075N	SCREW,CAP,HEXAGON H 1/4-20 X 3/4 PART OF KIT P/N 5705698..... UOC:AVY,A11,A13,A14,A15,A20,A24,A25, A26,A27,B16,B17,B18,HVY,H11,H13,H14, H15,H16,H17,H18,H20,H21,H24,H25,H26, H27,H28,MMM	2
5	PAOZZ	5310005825965	96906	MS35338-44	WASHER,LOCK 1/4 PART OF KIT P/N 5705698..... UOC:AVY,A11,A13,A14,A15,A20,A24,A25, A26,A27,B16,B17,B18,HVY,H11,H13,H14, H15,H16,H17,H18,H20,H21,H24,H25,H26, H27,H28,MMM	2
6	PAOZZ	2540011975449	19207	12342082	DIVERTER ASSEMBLY,E PART OF KIT P/N 5705698..... UOC:AVY,A11,A13,A14,A15,A20,A24,A25, A26,A27,B16,B17,B18,HVY,H11,H13,H14, H15,H16,H17,H18,H20,H21,H24,H25,H26, H27,H28,MMM	1
7	PFOZZ	2990013232562	19207	12342094	PIPE,EXHAUST PART OF KIT P/N 5705698 UOC:AVY,A11,A13,A14,A15,A20,A24,A25, A26,A27,B16,B17,B18,HVY,H11,H13,H14, H15,H16,H17,H18,H20,H21,H24,H25,H26, H27,H28,MMM	1
8	PAOZZ	5315002857161	80205	MS24665-377	PIN,COTTER PART OF KIT P/N 5705698.. UOC:AVY,A11,A13,A14,A15,A20,A24,A25, A26,A27,B16,B17,B18,HVY,H11,H13,H14, H15,H16,H17,H18,H20,H21,H24,H25,H26, H27,H28,MMM	4
9	PAOZZ	2990013949670	34623	12340587-3	PIPE,EXHAUST PART OF KIT P/N 5705698 UOC:AVY,A11,A13,A14,A15,A20,A24,A25, A26,A27,B16,B17,B18,HVY,H11,H13,H14, H15,H16,H17,H18,H20,H21,H24,H25,H26, H27,H28,MMM	1

(1) ITEM NO	(2) SMR CODE	(3) NSN	(4) CAGEC	(5) PART NUMBER	(6) DESCRIPTION AND USABLE ON CODES(UOC)	(7) QTY
10	PAOZZ	4730009083193	66295	WWD48-58H	CLAMP,HOSE PART OF KIT P/N 5705698.. UOC:AVY,A11,A13,A14,A15,A20,A24,A25, A26,A27,B16,B17,B18,HVY,H11,H13,H14, H15,H16,H17,H18,H20,H21,H24,H25,H26, H27,H28,MMM	2
11	PAOZZ	2990013229880	19207	12342087-2	CONNECTOR,EXHAUST P PART OF KIT P/N 5705698..... UOC:AVY,A11,A13,A14,A15,A20,A24,A25, A26,A27,B16,B17,B18,HVY,H11,H13,H14, H15,H16,H17,H18,H20,H21,H24,H25,H26, H27,H28,MMM	1
12	PAOZZ	2990013943751	19207	12342089	PIPE,EXHAUST PART OF KIT P/N 5705698 UOC:AVY,A11,A13,A14,A15,A20,A24,A25, A26,A27,B16,B17,B18,HVY,H11,H13,H14, H15,H16,H17,H18,H20,H21,H24,H25,H26, H27,H28,MMM	1
13	PAOZZ	5305000712506	80204	B1821BH025C050N	SCREW,CAP,HEXAGON H 1/4-20 X 1/2 PART OF KIT P/N 5705698..... UOC:AVY,A11,A13,A14,A15,A20,A24,A25, A26,A27,B16,B17,B18,HVY,H11,H13,H14, H15,H16,H17,H18,H20,H21,H24,H25,H26, H27,H28,MMM	1
14	PAOZZ	5320012716357	19207	12339355-1	RIVET,BLIND PART OF KIT P/N 5705698. UOC:AVY,A11,A13,A14,A15,A20,A24,A25, A26,A27,B16,B17,B18,HVY,H11,H13,H14, H15,H16,H17,H18,H20,H21,H24,H25,H26, H27,H28,MMM	4
15	KFFZZ		19207	12340695	TEMPLATE PART OF KIT P/N 5705698.... UOC:AVY,A11,A13,A14,A15,A20,A24,A25, A26,A27,B16,B17,B18,HVY,H11,H13,H14, H15,H16,H17,H18,H20,H21,H24,H25,H26, H27,H28,MMM	1
16	PAOZZ	5310008094058	96906	MS27183-10	WASHER,FLAT 1/4 PART OF KIT P/N 5705698..... UOC:AVY,A11,A13,A14,A15,A20,A24,A25, A26,A27,B16,B17,B18,HVY,H11,H13,H14, H15,H16,H17,H18,H20,H21,H24,H25,H26, H27,H28,MMM	10
17	PAOZZ	5307011505992	7X677	14066307	STUD,SHOULDERED PART OF KIT P/N 5705698..... UOC:AVY,A11,A13,A14,A15,A20,A24,A25, A26,A27,B16,B17,B18,HVY,H11,H13,H14, H15,H16,H17,H18,H20,H21,H24,H25,H26, H27,H28,MMM	7
18	PAOZZ	5310012065479	7X677	08656394	NUT,SELF-LOCKING,HE M6-1.0MM PART OF KIT P/N 5705698..... UOC:AVY,A11,A13,A14,A15,A20,A24,A25, A26,A27,B16,B17,B18,HVY,H11,H13,H14, H15,H16,H17,H18,H20,H21,H24,H25,H26, H27,H28,MMM	10
19	PAOZZ	5342013262583	19207	12342085	ANCHOR STRAP PART OF KIT P/N 5705698 UOC:AVY,A11,A13,A14,A15,A20,A24,A25, A26,A27,B16,B17,B18,HVY,H11,H13,H14,	1

(1) ITEM NO	(2) SMR CODE	(3) NSN	(4) CAGEC	(5) PART NUMBER	(6) DESCRIPTION AND USABLE ON CODES(UOC)	(7) QTY
					H15,H16,H17,H18,H20,H21,H24,H25,H26, H27,H28,MMM	
20	PAOZZ	5305001804966	96906	MS51849-64	SCREW,MACHINE #10-32 X 1/2 PART OF KIT P/N 5705698..... UOC:AVY,A11,A13,A14,A15,A20,A24,A25, A26,A27,B16,B17,B18,HVY,H11,H13,H14, H15,H16,H17,H18,H20,H21,H24,H25,H26, H27,H28,MMM	1
21	PAOZZ	5340009883186	96906	MS21333-19	CLAMP,LOOP PART OF KIT P/N 5705698.. UOC:AVY,A11,A13,A14,A15,A20,A24,A25, A26,A27,B16,B17,B18,HVY,H11,H13,H14, H15,H16,H17,H18,H20,H21,H24,H25,H26, H27,H28,MMM	1
22	PAOZZ	5310000617326	96906	MS21045-3	NUT,SELF-LOCKING,HE 3/8-32 PART OF KIT P/N 5705698..... UOC:AVY,A11,A13,A14,A15,A20,A24,A25, A26,A27,B16,B17,B18,HVY,H11,H13,H14, H15,H16,H17,H18,H20,H21,H24,H25,H26, H27,H28,MMM	1
23	PFOOO	2540011975460	19207	12342088	SHRUOD,ARCTIC PART OF KIT P/N 5705698..... UOC:AVY,A11,A13,A14,A15,A20,A24,A25, A26,A27,B16,B17,B18,HVY,H11,H13,H14, H15,H16,H17,H18,H20,H21,H24,H25,H26, H27,H28,MMM	1
24	PAOZZ	5340013951244	19207	12340474	.BRACKET,ANGLE..... UOC:AVY,A11,A13,A14,A15,A20,A24,A25, A26,A27,B16,B17,B18,HVY,H11,H13,H14, H15,H16,H17,H18,H20,H21,H24,H25,H26, H27,H28,MMM	1
25	PAOZZ	5310008094058	96906	MS27183-10	.WASHER,FLAT 1/4..... UOC:AVY,A11,A13,A14,A15,A20,A24,A25, A26,A27,B16,B17,B18,HVY,H11,H13,H14, H15,H16,H17,H18,H20,H21,H24,H25,H26, H27,H28,MMM	4
26	PAOZZ	5305000712506	80204	B1821BH025C050N	.SCREW,CAP,HEXAGON H 1/4/-20 X 1/2. UOC:AVY,A11,A13,A14,A15,A20,A24,A25, A26,A27,B16,B17,B18,HVY,H11,H13,H14, H15,H16,H17,H18,H20,H21,H24,H25,H26, H27,H28,MMM	4

END OF FIGURE

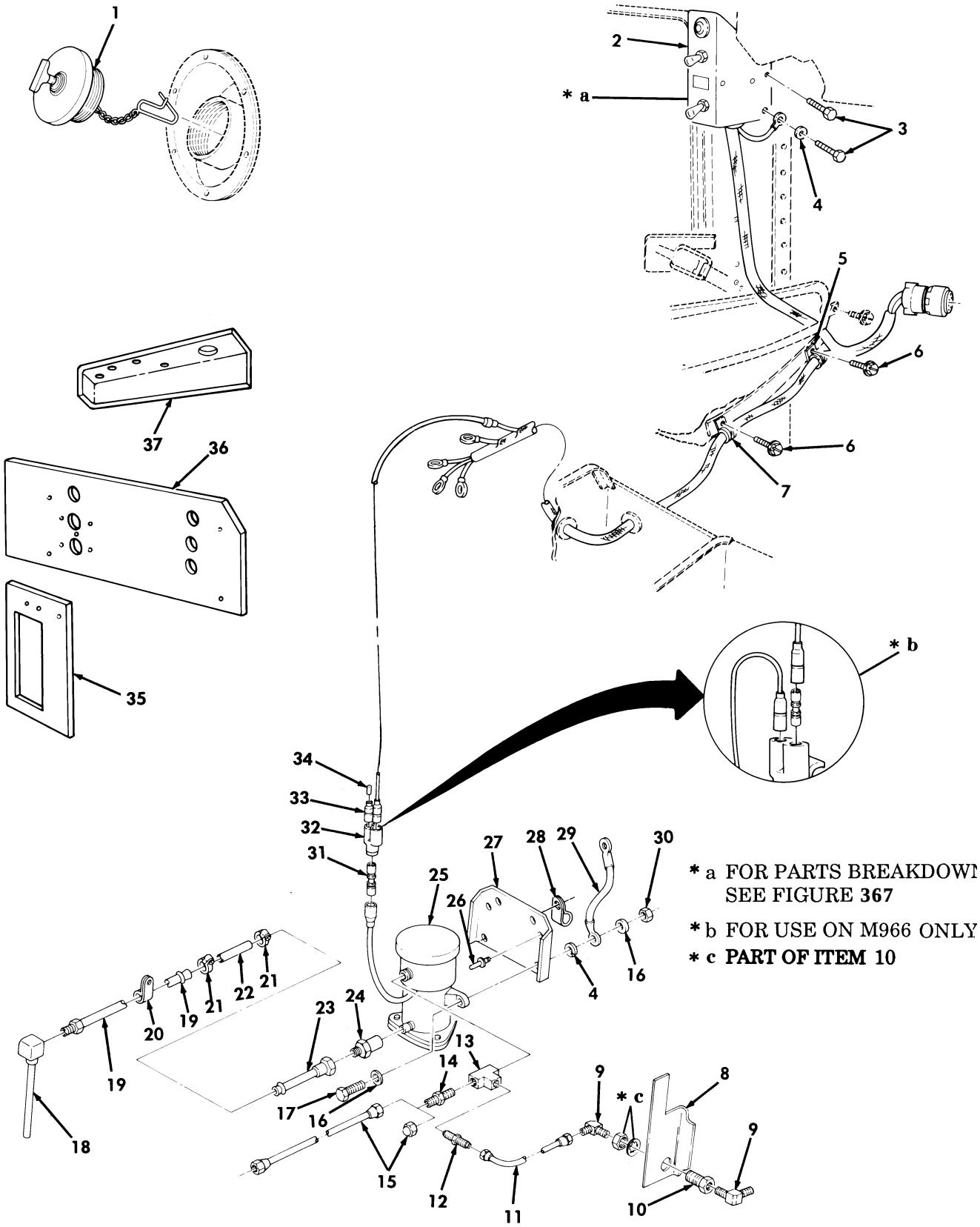

Figure 366. Arctic Kit, Control Box, Gas Cap, Fuel Pump, and Fuel Lines.

(1) ITEM NO	(2) SMR CODE	(3) NSN	(4) CAGEC	(5) PART NUMBER	(6) DESCRIPTION AND USABLE ON CODES(UOC)	(7) QTY
					GROUP 3303 WINTERIZATION KITS	
					FIG. 366 ARCTIC KIT,CONTROL BOX,GAS CAP,FUEL PUMP,AND FUEL LINES	
1	PAOZZ	5342012541498	19207	12338558-2	CAP,FILLER OPENING PART OF KIT P/N 5705698..... UOC:AVY,A11,A13,A14,A15,A20,A24,A25, A26,A27,B16,B17,B18,HVY,H11,H13,H14, H15,H16,H17,H18,H20,H21,H24,H25,H26, H27,H28,MMM	1
2	PFOOO	2540011992396	19207	12340436	CONTROL BOX PART OF KIT P/N 5705698. UOC:AVY,A11,A13,A14,A15,A20,A24,A25, A26,A27,B16,B17,B18,HVY,H11,H13,H14, H15,H16,H17,H18,H20,H21,H24,H25,H26, H27,H28,MMM	1
3	PAOZZ	5305010846067	96906	MS51871-1	SCREW,TAPPING 1/4-20 X 1/2 PART OF KIT P/N 5705698..... UOC:AVY,A11,A13,A14,A15,A20,A24,A25, A26,A27,B16,B17,B18,HVY,H11,H13,H14, H15,H16,H17,H18,H20,H21,H24,H25,H26, H27,H28,MMM	2
4	PAOZZ	5310005501130	96906	MS35333-40	WASHER,LOCK 1/4 PART OF KIT P/N 5705698..... UOC:AVY,A11,A13,A14,A15,A20,A24,A25, A26,A27,B16,B17,B18,HVY,H11,H13,H14, H15,H16,H17,H18,H20,H21,H24,H25,H26, H27,H28,MMM	2
5	PAOZZ	5340000913790	96906	MS21333-72	CLAMP,LOOP PART OF KIT P/N 5705698.. UOC:AVY,A11,A13,A14,A15,A20,A24,A25, A26,A27,B16,B17,B18,HVY,H11,H13,H14, H15,H16,H17,H18,H20,H21,H24,H25,H26, H27,H28,MMM	1
6	PAOZZ	5305014339248	24617	9414295	SCREW,MACHINE #10-32 X 1/2 PART OF KIT P/N 5705698..... UOC:AVY,A11,A13,A14,A15,A20,A24,A25, A26,A27,B16,B17,B18,HVY,H11,H13,H14, H15,H16,H17,H18,H20,H21,H24,H25,H26, H27,H28,MMM	2
7	PAOZZ	5340000572904	96906	MS21333-71	CLAMP,LOOP PART OF KIT P/N 5705698.. UOC:AVY,A11,A13,A14,A15,A20,A24,A25, A26,A27,B16,B17,B18,HVY,H11,H13,H14, H15,H16,H17,H18,H20,H21,H24,H25,H26, H27,H28,MMM	1
8	KFFZZ		19207	12340702	TEMPLATE PART OF KIT P/N 5705698.... UOC:AVY,A11,A13,A14,A15,A20,A24,A25, A26,A27,B16,B17,B18,HVY,H11,H13,H14, H15,H16,H17,H18,H20,H21,H24,H25,H26, H27,H28,MMM	1
9	PAOZZ	4730014565446	24617	15670396	ELBOW,PIPE TO TUBE PART OF KIT P/N 5705698..... UOC:AVY,A11,A13,A14,A15,A20,A24,A25, A26,A27,B16,B17,B18,HVY,H11,H13,H14,	2

(1) ITEM NO	(2) SMR CODE	(3) NSN	(4) CAGEC	(5) PART NUMBER	(6) DESCRIPTION AND USABLE ON CODES(UOC)	(7) QTY
					H15,H16,H17,H18,H20,H21,H24,H25,H26, H27,H28,MMM	
10	PAOZZ	4730008975497	79470	W21204	COUPLING,PIPE PART OF KIT P/N 5705698..... UOC:AVY,A11,A13,A14,A15,A20,A24,A25, A26,A27,B16,B17,B18,HVY,H11,H13,H14, H15,H16,H17,H18,H20,H21,H24,H25,H26, H27,H28,MMM	1
11	PAOZZ	4710013953982	19207	12342605	TUBE ASSEMBLY,METAL ARCTIC FUEL LINE, PART OF KIT P/N 5705698..... UOC:AVY,A11,A13,A14,A15,A20,A24,A25, A26,A27,B16,B17,B18,HVY,H11,H13,H14, H15,H16,H17,H18,H20,H21,H24,H25,H26, H27,H28,MMM	1
12	PAOZZ	4730002660536	24617	110200	ADAPTER,STRAIGHT,PI ARCTIC FUEL PUMP PART OF KIT P/N 5705698..... UOC:AVY,A11,A13,A14,A15,A20,A24,A25, A26,A27,B16,B17,B18,HVY,H11,H13,H14, H15,H16,H17,H18,H20,H21,H24,H25,H26, H27,H28,MMM	1
13	PAOZZ	4730004713102	81343	4-4-4 130438B	TEE,PIPE PART OF KIT P/N 5705698.... UOC:AVY,A11,A13,A14,A15,A20,A24,A25, A26,A27,B16,B17,B18,HVY,H11,H13,H14, H15,H16,H17,H18,H20,H21,H24,H25,H26, H27,H28,MMM	1
14	PAOZZ	4730002660538	06178	1295	ADAPTER,STRAIGHT,PI PART OF KIT P/N 5705698..... UOC:A15,B16,H15,H16	1
14	PAOZZ	4730002660536	24617	110200	ADAPTER,STRAIGHT,PI PART OF KIT P/N 5705698..... UOC:AVY,A11,A13,A14,A20,A24,A25,A26, A27,B17,B18,HVY,H11,H13,H14,H17,H18, H20,H21,H24,H25,H26,H27,H28,MMM	1
15	PAOZZ	4710013946169	19207	12342606	TUBE ASSEMBLY,METAL PART OF KIT P/N 5705698..... UOC:A15,B16,H15,H16	1
15	PAOZZ	4730002608285	81343	5 010112B(N5)	CAP,TUBE PART OF KIT P/N 5705698.... UOC:AVY,A11,A13,A14,A20,A24,A25,A26, A27,B17,B18,HVY,H11,H13,H14,H17,H18, H20,H21,H24,H25,H26,H27,H28,MMM	1
16	PAFZZ	5310008094058	96906	MS27183-10	WASHER,FLAT 1/4..... UOC:AVY,A11,A13,A14,A15,A20,A24,A25, A26,A27,B16,B17,B18,HVY,H11,H13,H14, H15,H16,H17,H18,H20,H21,H24,H25,H26, H27,H28,MMM	4
17	PAOZZ	5305002253842	80204	B1821BH025C100N	SCREW,CAP,HEXAGON H 1/4-20 X 1.00 PART OF KIT P/N 5705698..... UOC:AVY,A11,A13,A14,A15,A20,A24,A25, A26,A27,B16,B17,B18,HVY,H11,H13,H14, H15,H16,H17,H18,H20,H21,H24,H25,H26, H27,H28,MMM	2
18	PAOZZ	4710013592956	19207	12338548-2	TUBE ASSEMBLY,METAL PART OF KIT P/N 5705698.....	1

(1) ITEM NO	(2) SMR CODE	(3) NSN	(4) CAGEC	(5) PART NUMBER	(6) DESCRIPTION AND USABLE ON CODES(UOC)	(7) QTY
					UOC:AVY,A11,A13,A14,A15,A20,A24,A25, A26,A27,B16,B17,B18,HVY,H11,H13,H14, H15,H16,H17,H18,H20,H21,H24,H25,H26, H27,H28,MMM	
19	PAOZZ	4710012030607	34623	5588694	TUBE ASSEMBLY,METAL PART OF KIT P/N 5705698..... UOC:AVY,A11,A13,A14,A15,A20,A24,A25, A26,A27,B16,B17,B18,HVY,H11,H13,H14, H15,H16,H17,H18,H20,H21,H24,H25,H26, H27,H28,MMM	1
20	PAOZZ	5340009936207	96906	MS21333-99	CLAMP,LOOP PART OF KIT P/N 5705698.. UOC:AVY,A11,A13,A14,A15,A20,A24,A25, A26,A27,B16,B17,B18,HVY,H11,H13,H14, H15,H16,H17,H18,H20,H21,H24,H25,H26, H27,H28,MMM	1
21	PAOZZ	4730000243971	7Z588	6706	CLAMP,HOSE PART OF KIT P/N 5705698.. UOC:AVY,A11,A13,A14,A15,A20,A24,A25, A26,A27,B16,B17,B18,HVY,H11,H13,H14, H15,H16,H17,H18,H20,H21,H24,H25,H26, H27,H28,MMM	2
22	MOOZZ		9C234	12338553-1	HOSE,NONMETALLIC MAKE FROM HOSE,P/N 9438306,2.80 INCHES LONG PART OF KIT P/N 5705698..... UOC:AVY,A11,A13,A14,A15,A20,A24,A25, A26,A27,B16,B17,B18,HVY,H11,H13,H14, H15,H16,H17,H18,H20,H21,H24,H25,H26, H27,H28,MMM	1
23	PAOZZ	4710012030608	19207	12338564	TUBE ASSEMBLY,METAL PART OF KIT P/N 5705698..... UOC:AVY,A11,A13,A14,A15,A20,A24,A25, A26,A27,B16,B17,B18,HVY,H11,H13,H14, H15,H16,H17,H18,H20,H21,H24,H25,H26, H27,H28,MMM	1
24	PAOZZ	4730002776347	20969	246X5X4	ADAPTER,STRAIGHT,PI PART OF KIT P/N 5705698..... UOC:AVY,A11,A13,A14,A15,A20,A24,A25, A26,A27,B16,B17,B18,HVY,H11,H13,H14, H15,H16,H17,H18,H20,H21,H24,H25,H26, H27,H28,MMM	1
25	PAOZZ	2910009309367	53711	2590174	PUMP,FUEL,ELECTRICA PART OF KIT P/N 5705698..... UOC:AVY,A11,A13,A14,A15,A20,A24,A25, A26,A27,B16,B17,B18,HVY,H11,H13,H14, H15,H16,H17,H18,H20,H21,H24,H25,H26, H27,H28,MMM	1
26	PAFZZ	5320011357319	80205	NAS9301BNS-6-03	RIVET,BLIND PART OF KIT P/N 5705698. UOC:AVY,A11,A13,A14,A15,A20,A24,A25, A26,A27,B16,B17,B18,HVY,H11,H13,H14, H15,H16,H17,H18,H20,H21,H24,H25,H26, H27,H28,MMM	4
27	PFFZZ	5340012043903	19207	12338559	BRACKET,DOUBLE ANGL PART OF KIT P/N 5705698..... UOC:AVY,A11,A13,A14,A15,A20,A24,A25,	1

(1) ITEM NO	(2) SMR CODE	(3) NSN	(4) CAGEC	(5) PART NUMBER	(6) DESCRIPTION AND USABLE ON CODES(UOC)	(7) QTY
					A26,A27,B16,B17,B18,HVY,H11,H13,H14, H15,H16,H17,H18,H20,H21,H24,H25,H26, H27,H28,MMM	
28	PAOZZ	5340002827537	96906	MS21333-41	CLAMP,LOOP PART OF KIT P/N 5705698.. UOC:AVY,A11,A13,A14,A15,A20,A24,A25, A26,A27,B16,B17,B18,HVY,H11,H13,H14, H15,H16,H17,H18,H20,H21,H24,H25,H26, H27,H28,MMM	1
29	PFOZZ	6150012608000	19207	12340489	LEAD,ELECTRICAL PART OF KIT P/N 5705698..... UOC:AVY,A11,A13,A14,A15,A20,A24,A25, A26,A27,B16,B17,B18,HVY,H11,H13,H14, H15,H16,H17,H18,H20,H21,H24,H25,H26, H27,H28,MMM	1
30	PAOZZ	5310000614650	96906	MS51943-31	NUT,SELF-LOCKING,HE 1/4-20..... UOC:AVY,A11,A13,A14,A15,A20,A24,A25, A26,A27,B16,B17,B18,HVY,H11,H13,H14, H15,H16,H17,H18,H20,H21,H24,H25,H26, H27,H28,MMM	2
31	PAOZZ	5935008074109	19207	8741492	ADAPTER,CONNECTOR PART OF KIT P/N 5705698..... UOC:AVY,A11,A13,A14,A15,A20,A24,A25, A26,A27,B16,B17,B18,HVY,H11,H13,H14, H15,H16,H17,H18,H20,H21,H24,H25,H26, H27,H28,MMM	1
32	PAOZZ	5935009006281	96906	MS27147-1	ADAPTER,CONNECTOR PART OF KIT P/N 5705698..... UOC:AVY,A11,A13,A14,A15,A20,A24,A25, A26,A27,B16,B17,B18,HVY,H11,H13,H14, H15,H16,H17,H18,H20,H21,H24,H25,H26, H27,H28,MMM	1
33	PAOZZ	5935008338561	19207	8338561	SHELL,ELECTRICAL CO PART OF KIT P/N 5705698..... UOC:AVY,A11,A13,A14,A15,A20,A24,A25, A26,A27,B16,B17,B18,HVY,H11,H13,H14, H15,H16,H17,H18,H20,H21,H24,H25,H26, H27,H28,MMM	1
34	PAOZZ	5935002140904	19207	7982907	DUMMY CONNECTOR,PLU PART OF KIT P/N 5705698..... UOC:AVY,A11,A13,A14,A15,A20,A24,A25, A26,A27,B16,B17,B18,HVY,H11,H13,H14, H15,H16,H17,H18,H20,H21,H24,H25,H26, H27,H28,MMM	1
35	KFFZZ		19207	12340703	TEMPLATE PART OF KIT P/N 5705698.... UOC:AVY,A11,A13,A14,A15,A20,A24,A25, A26,A27,B16,B17,B18,HVY,H11,H13,H14, H15,H16,H17,H18,H20,H21,H24,H25,H26, H27,H28,MMM	1
36	KFFZZ		19207	12340704	TEMPLATE PART OF KIT P/N 5705698.... UOC:AVY,A11,A13,A14,A15,A20,A24,A25, A26,A27,B16,B17,B18,HVY,H11,H13,H14, H15,H16,H17,H18,H20,H21,H24,H25,H26, H27,H28,MMM	1

(1) ITEM NO	(2) SMR CODE	(3) NSN	(4) CAGEC	(5) PART NUMBER	(6) DESCRIPTION AND USABLE ON CODES(UOC)	(7) QTY
37	KFFZZ		34623	12340696	TEMPLATE,FUEL PUMP PART OF KIT P/N 5705698..... UOC:AVY,A11,A13,A14,A15,A20,A24,A25, A26,A27,B16,B17,B18,HVY,H11,H13,H14, H15,H16,H17,H18,H20,H21,H24,H25,H26, H27,H28,MMM	1

END OF FIGURE

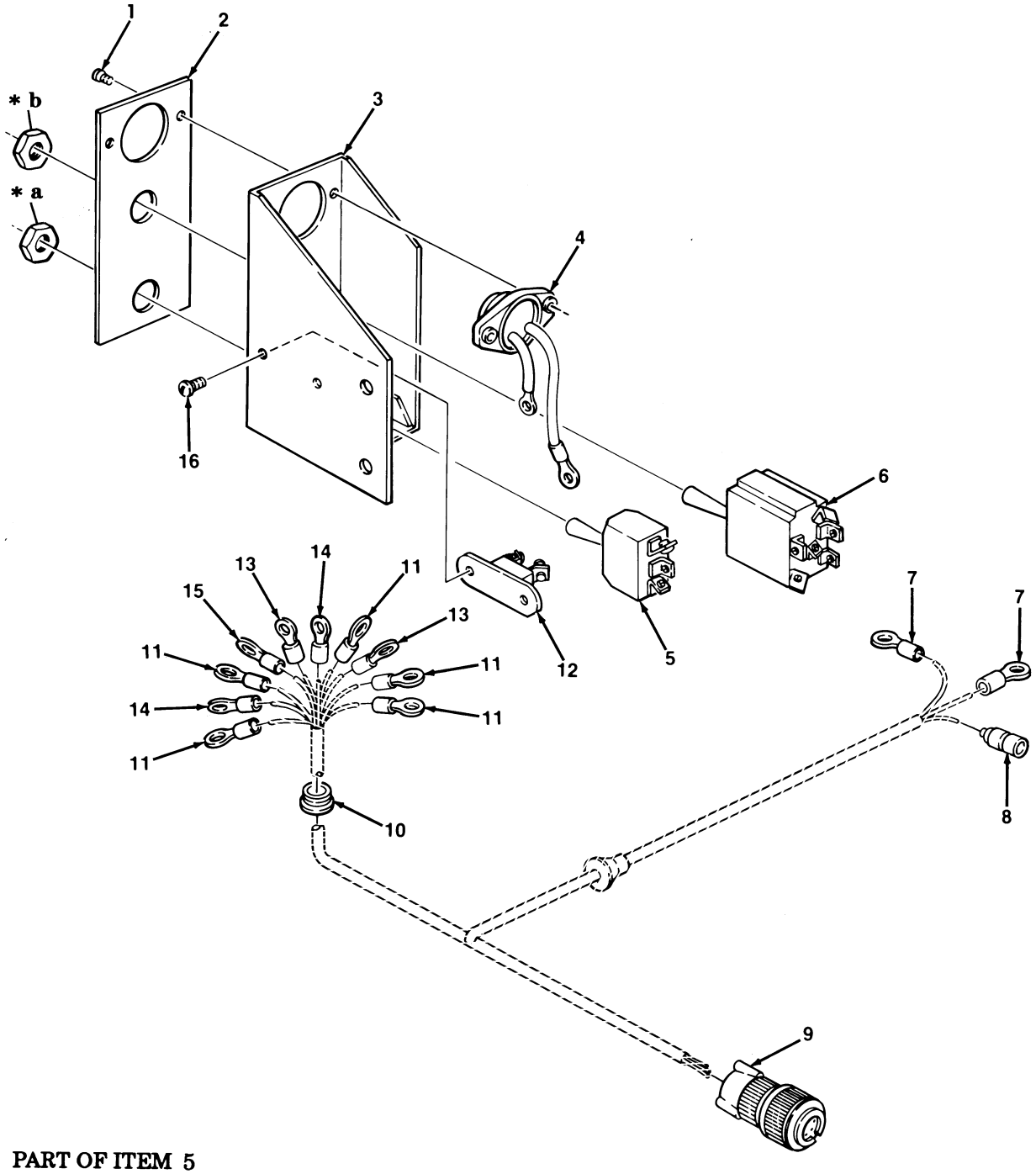

* a PART OF ITEM 5
* b PART OF ITEM 6

Figure 367. Arctic Kit, Control Box Assembly.

(1) ITEM NO	(2) SMR CODE	(3) NSN	(4) CAGEC	(5) PART NUMBER	(6) DESCRIPTION AND USABLE ON CODES(UOC)	(7) QTY
					GROUP 3303 WINTERIZATION KITS	
					FIG. 367 ARCTIC KIT,CONTROL BOX ASSEMBLY	
1	PAOZZ	5305011389540	96906	MS51863-33	SCREW,TAPPING #8-32 X 3/8..... UOC:AVY,A11,A13,A14,A15,A20,A24,A25, A26,A27,B16,B17,B18,HVY,H11,H13,H14, H15,H16,H17,H18,H20,H21,H24,H25,H26, H27,H28,MMM	2
2	PFOZZ	9905011992371	19207	12340442	PLATE,IDENTIFICATIO..... UOC:AVY,A11,A13,A14,A15,A20,A24,A25, A26,A27,B16,B17,B18,HVY,H11,H13,H14, H15,H16,H17,H18,H20,H21,H24,H25,H26, H27,H28,MMM	1
3	XAOZZ		34623	5590544	CONTROL BOX..... UOC:AVY,A11,A13,A14,A15,A20,A24,A25, A26,A27,B16,B17,B18,HVY,H11,H13,H14, H15,H16,H17,H18,H20,H21,H24,H25,H26, H27,H28,MMM	1
4	PAOZZ	6210012032101	19207	12340466	LIGHT,INDICATOR..... UOC:AVY,A11,A13,A14,A15,A20,A24,A25, A26,A27,B16,B17,B18,HVY,H11,H13,H14, H15,H16,H17,H18,H20,H21,H24,H25,H26, H27,H28,MMM	1
5	PAOZZ	5930006551514	96906	MS35058-22	SWITCH,TOGGLE..... UOC:AVY,A11,A13,A14,A15,A20,A24,A25, A26,A27,B16,B17,B18,HVY,H11,H13,H14, H15,H16,H17,H18,H20,H21,H24,H25,H26, H27,H28,MMM	1
6	PAOZZ	5930006157897	96906	MS35059-31	SWITCH,TOGGLE..... UOC:AVY,A11,A13,A14,A15,A20,A24,A25, A26,A27,B16,B17,B18,HVY,H11,H13,H14, H15,H16,H17,H18,H20,H21,H24,H25,H26, H27,H28,MMM	1
7	PAOZZ	5940001139821	96906	MS20659-166	TERMINAL,LUG..... UOC:AVY,A11,A13,A14,A15,A20,A24,A25, A26,A27,B16,B17,B18,HVY,H11,H13,H14, H15,H16,H17,H18,H20,H21,H24,H25,H26, H27,H28,MMM	2
8	PAOZA	5935001677775	96906	MS27144-1	CONNECTOR,PLUG,ELEC..... UOC:AVY,A11,A13,A14,A15,A20,A24,A25, A26,A27,B16,B17,B18,HVY,H11,H13,H14, H15,H16,H17,H18,H20,H21,H24,H25,H26, H27,H28,MMM	1
9	PAOZZ	5935010355139	96906	MS3456W18-11S	CONNECTOR,PLUG,ELEC..... UOC:AVY,A11,A13,A14,A15,A20,A24,A25, A26,A27,B16,B17,B18,HVY,H11,H13,H14, H15,H16,H17,H18,H20,H21,H24,H25,H26, H27,H28,MMM	1
10	PAOZZ	5325002811557	79497	G1895	GROMMET,NONMETALLIC..... UOC:AVY,A11,A13,A14,A15,A20,A24,A25, A26,A27,B16,B17,B18,HVY,H11,H13,H14,	1

(1) ITEM NO	(2) SMR CODE	(3) NSN	(4) CAGEC	(5) PART NUMBER	(6) DESCRIPTION AND USABLE ON CODES(UOC)	(7) QTY
					H15,H16,H17,H18,H20,H21,H24,H25,H26, H27,H28,MMM	
11	PAOZZ	5940002835280	96906	MS25036-106	TERMINAL,LUG..... UOC:AVY,A11,A13,A14,A15,A20,A24,A25, A26,A27,B16,B17,B18,HVY,H11,H13,H14, H15,H16,H17,H18,H20,H21,H24,H25,H26, H27,H28,MMM	5
12	PAOZZ	5925013731034	82647	PSA-25	CIRCUIT BREAKER..... UOC:AVY,A11,A13,A14,A15,A20,A24,A25, A26,A27,B16,B17,B18,HVY,H11,H13,H14, H15,H16,H17,H18,H20,H21,H24,H25,H26, H27,H28,MMM	1
13	PAOZZ	5940002048990	96906	MS25036-111	TERMINAL,LUG..... UOC:AVY,A11,A13,A14,A15,A20,A24,A25, A26,A27,B16,B17,B18,HVY,H11,H13,H14, H15,H16,H17,H18,H20,H21,H24,H25,H26, H27,H28,MMM	2
14	PAOZZ	5940001434775	96906	MS25036-156	TERMINAL,LUG..... UOC:AVY,A11,A13,A14,A15,A20,A24,A25, A26,A27,B16,B17,B18,HVY,H11,H13,H14, H15,H16,H17,H18,H20,H21,H24,H25,H26, H27,H28,MMM	2
15	PAOZZ	5940001434774	96906	MS25036-153	TERMINAL,LUG..... UOC:AVY,A11,A13,A14,A15,A20,A24,A25, A26,A27,B16,B17,B18,HVY,H11,H13,H14, H15,H16,H17,H18,H20,H21,H24,H25,H26, H27,H28,MMM	1
16	PAOZZ	5305009844988	96906	MS35206-228	SCREW,MACHINE #6-32 X 3/8..... UOC:AVY,A11,A13,A14,A15,A20,A24,A25, A26,A27,B16,B17,B18,HVY,H11,H13,H14, H15,H16,H17,H18,H20,H21,H24,H25,H26, H27,H28,MMM	2

END OF FIGURE

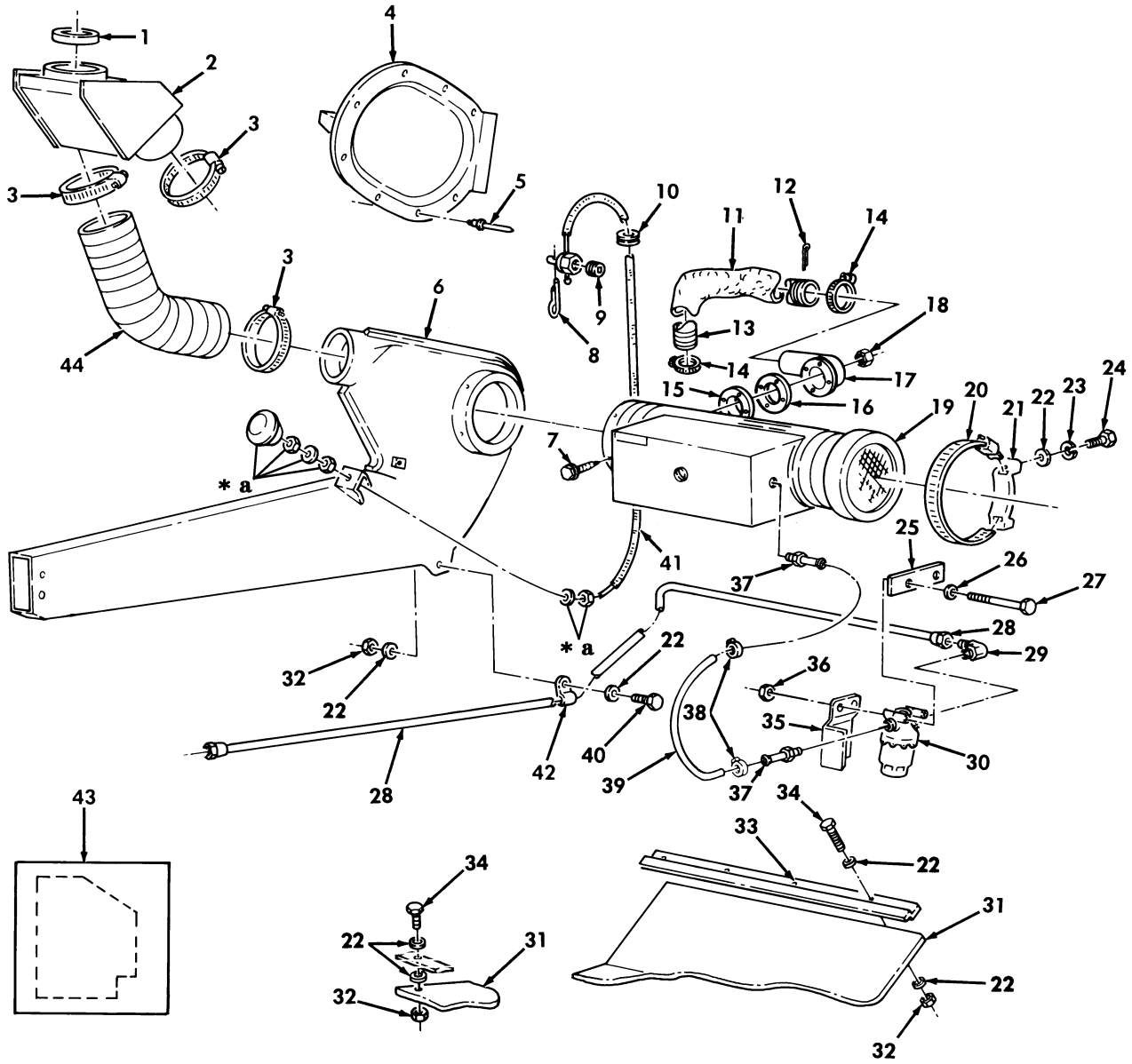

* a PART OF ITEM 41

Figure 368. Arctic Kit, Heater Assembly, Plenum Assembly, and Related Components.

(1) ITEM NO	(2) SMR CODE	(3) NSN	(4) CAGEC	(5) PART NUMBER	(6) DESCRIPTION AND USABLE ON CODES(UOC)	(7) QTY
					GROUP 3303 WINTERIZATION KITS	
					FIG. 368 ARCTIC KIT,HEATER ASSEMBLY, PLENUM ASSEMBLY,AND RELATED COMPONENTS	
1	PAOZZ	5330012039187	34623	5582936	SEAL,NONMETALLIC PART OF KIT P/N 5705698..... UOC:AVY,A11,A13,A14,A15,A20,A24,A25, A26,A27,B16,B17,B18,HVY,H11,H13,H14, H15,H16,H17,H18,H20,H21,H24,H25,H26, H27,H28,MMM	1
2	PFOZZ	2540012936926	19207	12340432	REGULATOR,AIR DUCT PART OF KIT P/N 5705698..... UOC:AVY,A11,A13,A14,A15,A20,A24,A25, A26,A27,B16,B17,B18,HVY,H11,H13,H14, H15,H16,H17,H18,H20,H21,H24,H25,H26, H27,H28,MMM	1
3	PAOZZ	4730009086292	96906	MS35842-14	CLAMP,HOSE PART OF KIT P/N 5705698.. UOC:AVY,A11,A13,A14,A15,A20,A24,A25, A26,A27,B16,B17,B18,HVY,H11,H13,H14, H15,H16,H17,H18,H20,H21,H24,H25,H26, H27,H28,MMM	3
4	PFOZZ	2540011975450	19207	12340434	COVER ASSEMBLY,COWL PART OF KIT P/N 5705698..... UOC:AVY,A11,A13,A14,A15,A20,A24,A25, A26,A27,B16,B17,B18,HVY,H11,H13,H14, H15,H16,H17,H18,H20,H21,H24,H25,H26, H27,H28,MMM	1
5	PFOZZ	5320011357319	80205	NAS9301BNS-6-03	RIVET,BLIND PART OF KIT P/N 5705698. UOC:AVY,A11,A13,A14,A15,A20,A24,A25, A26,A27,B16,B17,B18,HVY,H11,H13,H14, H15,H16,H17,H18,H20,H21,H24,H25,H26, H27,H28,MMM	8
6	PFOZZ	4140012592175	19207	12340477	HOUSING,CENTRIFUGAL PART OF KIT P/N 5705698..... UOC:AVY,A11,A13,A14,A15,A20,A24,A25, A26,A27,B16,B17,B18,HVY,H11,H13,H14, H15,H16,H17,H18,H20,H21,H24,H25,H26, H27,H28,MMM	1
7	PAOZZ	5305012596322	34623	12342499-1	SCREW,MACHINE #10-32 X 1/2 PART OF KIT P/N 5705698..... UOC:AVY,A11,A13,A14,A15,A20,A24,A25, A26,A27,B16,B17,B18,HVY,H11,H13,H14, H15,H16,H17,H18,H20,H21,H24,H25,H26, H27,H28,MMM	1
8	PAOZZ	5315008291480	80205	MS24665-208	PIN,COTTER PART OF KIT P/N 5705698.. UOC:AVY,A11,A13,A14,A15,A20,A24,A25, A26,A27,B16,B17,B18,HVY,H11,H13,H14, H15,H16,H17,H18,H20,H21,H24,H25,H26, H27,H28,MMM	1
9	PAOZZ	5305007246783	96906	MS51965-29	SETSCREW #8-32 X 1/4 PART OF KIT P/N 5705698.....	1

(1) ITEM NO	(2) SMR CODE	(3) NSN	(4) CAGEC	(5) PART NUMBER	(6) DESCRIPTION AND USABLE ON CODES(UOC)	(7) QTY
					UOC:AVY,A11,A13,A14,A15,A20,A24,A25, A26,A27,B16,B17,B18,HVY,H11,H13,H14, H15,H16,H17,H18,H20,H21,H24,H25,H26, H27,H28,MMM	
10	PAOZZ	5325001849846	81349	C3030	GROMMET,NONMETALLIC PART OF KIT P/N 5705698..... UOC:AVY,A11,A13,A14,A15,A20,A24,A25, A26,A27,B16,B17,B18,HVY,H11,H13,H14, H15,H16,H17,H18,H20,H21,H24,H25,H26, H27,H28,MMM	1
11	PAOZZ	2540013946167	19207	12342087-1	SHIELD,HEATER DUCT PART OF KIT P/N 5705698..... UOC:A11,A13,A14,A20,A24,A25,A26,A27, B17,B18,B20,B24,B25,C17,H11,H13,H14, H15,H16,H17,H18,H20,H21,H24,H25,H26, H27,H28,MMM	1
12	PAOZZ	5315002857161	80205	MS24665-377	PIN,COTTER PART OF KIT P/N 5705698.. UOC:AVY,A11,A13,A14,A15,A20,A24,A25, A26,A27,B16,B17,B18,HVY,H11,H13,H14, H15,H16,H17,H18,H20,H21,H24,H25,H26, H27,H28,MMM	3
13	PAOZZ	2990013229881	19207	12342091	CONNECTOR,EXHAUST P PART OF KIT P/N 5705698..... UOC:AVY,A11,A13,A14,A15,A20,A24,A25, A26,A27,B16,B17,B18,HVY,H11,H13,H14, H15,H16,H17,H18,H20,H21,H24,H25,H26, H27,H28,MMM	1
14	PAOZZ	4730009083193	66295	WWD48-58H	CLAMP,HOSE PART OF KIT P/N 5705698.. UOC:AVY,A11,A13,A14,A15,A20,A24,A25, A26,A27,B16,B17,B18,HVY,H11,H13,H14, H15,H16,H17,H18,H20,H21,H24,H25,H26, H27,H28,MMM	2
15	PAOZZ	4730013229871	19207	12342083	FLANGE,PIPE PART OF KIT P/N 5705698. UOC:AVY,A11,A13,A14,A15,A20,A24,A25, A26,A27,B16,B17,B18,HVY,H11,H13,H14, H15,H16,H17,H18,H20,H21,H24,H25,H26, H27,H28,MMM	1
16	PAOZZ	2540011231218	19207	12275161	THERMASEAL,HEATER PART OF KIT P/N 5705698..... UOC:AVY,A11,A13,A14,A15,A20,A24,A25, A26,A27,B16,B17,B18,HVY,H11,H13,H14, H15,H16,H17,H18,H20,H21,H24,H25,H26, H27,H28,MMM	1
17	PAOZZ	2990013229879	19207	12342093	CONNECTOR,EXHAUST P PART OF KIT P/N 5705698..... UOC:AVY,A11,A13,A14,A15,A20,A24,A25, A26,A27,B16,B17,B18,HVY,H11,H13,H14, H15,H16,H17,H18,H20,H21,H24,H25,H26, H27,H28,MMM	1
18	PAOZZ	5310009359022	96906	MS51943-32	NUT,SELF-LOCKING,HE 1/4-20 PART OF KIT P/N 5705698..... UOC:AVY,A11,A13,A14,A15,A20,A24,A25, A26,A27,B16,B17,B18,HVY,H11,H13,H14,	4

(1) ITEM NO	(2) SMR CODE	(3) NSN	(4) CAGEC	(5) PART NUMBER	(6) DESCRIPTION AND USABLE ON CODES(UOC)	(7) QTY
					H15,H16,H17,H18,H20,H21,H24,H25,H26, H27,H28,MMM	
19	PAOFF	2540011943323	81349	MIL-PRF-62550/3	HEATER,VEHICULAR,CO..... UOC:AVY,A11,A13,A14,A15,A20,A24,A25, A26,A27,B16,B17,B18,HVY,H11,H13,H14, H15,H16,H17,H18,H20,H21,H24,H25,H26, H27,H28,MMM	1
20	PAOZZ	4730009086294	17576	A-A-52506	CLAMP,HOSE PART OF KIT P/N 5705698 UOC:AVY,A11,A13,A14,A15,A20,A24,A25, A26,A27,B16,B17,B18,HVY,H11,H13,H14, H15,H16,H17,H18,H20,H21,H24,H25,H26, H27,H28,MMM	2
21	PAOZZ	5340012043904	19207	12340448	BRACKET,MOUNTING PART OF KIT P/N 5705698..... UOC:AVY,A11,A13,A14,A15,A20,A24,A25, A26,A27,B16,B17,B18,HVY,H11,H13,H14, H15,H16,H17,H18,H20,H21,H24,H25,H26, H27,H28,MMM	2
22	PAOZZ	5310008094058	96906	MS27183-10	WASHER,FLAT 1/4 PART OF KIT P/N 5705698..... UOC:AVY,A11,A13,A14,A15,A20,A24,A25, A26,A27,B16,B17,B18,HVY,H11,H13,H14, H15,H16,H17,H18,H20,H21,H24,H25,H26, H27,H28,MMM	22
23	PAOZZ	5310005825965	96906	MS35338-44	WASHER,LOCK 1/4 PART OF KIT P/N 5705698..... UOC:AVY,A11,A13,A14,A15,A20,A24,A25, A26,A27,B16,B17,B18,HVY,H11,H13,H14, H15,H16,H17,H18,H20,H21,H24,H25,H26, H27,H28,MMM	4
24	PAOZZ	5305000712506	80204	B1821BH025C050N	SCREW,CAP,HEXAGON H 1/4-20 X 1/2 PART OF KIT P/N 5705698..... UOC:AVY,A11,A13,A14,A15,A20,A24,A25, A26,A27,B16,B17,B18,HVY,H11,H13,H14, H15,H16,H17,H18,H20,H21,H24,H25,H26, H27,H28,MMM	4
25	PAOZZ	5365013261153	19207	12342092	SPACER,PLATE PART OF KIT P/N 5705698 UOC:AVY,A11,A13,A14,A15,A20,A24,A25, A26,A27,B16,B17,B18,HVY,H11,H13,H14, H15,H16,H17,H18,H20,H21,H24,H25,H26, H27,H28,MMM	1
26	PAOZZ	5310000145850	96906	MS27183-42	WASHER,FLAT 7/32 PART OF KIT P/N 5705698..... UOC:AVY,A11,A13,A14,A15,A20,A24,A25, A26,A27,B16,B17,B18,HVY,H11,H13,H14, H15,H16,H17,H18,H20,H21,H24,H25,H26, H27,H28,MMM	2
27	PAOZZ	5305009956311	96906	MS35207-271	SCREW,MACHINE #10-24 X 1.75 PART OF KIT P/N 5705698..... UOC:AVY,A11,A13,A14,A15,A20,A24,A25, A26,A27,B16,B17,B18,HVY,H11,H13,H14, H15,H16,H17,H18,H20,H21,H24,H25,H26, H27,H28,MMM	2

(1) ITEM NO	(2) SMR CODE	(3) NSN	(4) CAGEC	(5) PART NUMBER	(6) DESCRIPTION AND USABLE ON CODES(UOC)	(7) QTY
28	PAOZZ	4710012031304	34623	5583352	TUBE ASSEMBLY,METAL PART OF KIT P/N 5705698..... UOC:AVY,A11,A13,A14,A15,A20,A24,A25, A26,A27,B16,B17,B18,HVY,H11,H13,H14, H15,H16,H17,H18,H20,H21,H24,H25,H26, H27,H28,MMM	1
29	PAOZZ	4730012045457	81343	5-2 010203CA	ELBOW,PIPE TO TUBE PART OF KIT P/N 5705698..... UOC:AVY,A11,A13,A14,A15,A20,A24,A25, A26,A27,B16,B17,B18,HVY,H11,H13,H14, H15,H16,H17,H18,H20,H21,H24,H25,H26, H27,H28,MMM	1
30	PAOZZ	2910014458097	58536	A52972-1	FILTER,FLUID PART OF KIT P/N 5705698 UOC:AVY,A11,A13,A14,A15,A20,A24,A25, A26,A27,B16,B17,B18,HVY,H11,H13,H14, H15,H16,H17,H18,H20,H21,H24,H25,H26, H27,H28,MMM	1
31	PAOZZ	2510013761092	34623	12339909	INSULATION PART OF KIT P/N 5705698.. UOC:AVY,A11,A13,A14,A15,A20,A24,A25, A26,A27,B16,B17,B18,HVY,H11,H13,H14, H15,H16,H17,H18,H20,H21,H24,H25,H26, H27,H28,MMM	1
32	PAOZZ	5310000614650	96906	MS51943-31	NUT,SELF-LOCKING,HE 1/4-20 PART OF KIT P/N 5705698..... UOC:AVY,A11,A13,A14,A15,A20,A24,A25, A26,A27,B16,B17,B18,HVY,H11,H13,H14, H15,H16,H17,H18,H20,H21,H24,H25,H26, H27,H28,MMM	9
33	PAOZZ	2590012633254	19207	12338838-2	BEZEL,AUTOMOTIVE TR PART OF KIT P/N 5705698..... UOC:AVY,A11,A13,A14,A15,A20,A24,A25, A26,A27,B16,B17,B18,HVY,H11,H13,H14, H15,H16,H17,H18,H20,H21,H24,H25,H26, H27,H28,MMM	1
34	PAOZZ	5305002253843	80204	B1821BH025C100N	SCREW,CAP,HEXAGON H 1/4-20 X 1.00 PART OF KIT P/N 5705698..... UOC:AVY,A11,A13,A14,A15,A20,A24,A25, A26,A27,B16,B17,B18,HVY,H11,H13,H14, H15,H16,H17,H18,H20,H21,H24,H25,H26, H27,H28,MMM	8
35	PAOZZ	2910013230123	19207	12342086	GUARD,FUEL FILTER PART OF KIT P/N 5705698..... UOC:AVY,A11,A13,A14,A15,A20,A24,A25, A26,A27,B16,B17,B18,HVY,H11,H13,H14, H15,H16,H17,H18,H20,H21,H24,H25,H26, H27,H28,MMM	1
36	PAOZZ	5310008775797	80205	MS21044N3	NUT,SELF-LOCKING,HE 3/16-32 PART OF KIT P/N 5705698..... UOC:AVY,A11,A13,A14,A15,A20,A24,A25, A26,A27,B16,B17,B18,HVY,H11,H13,H14, H15,H16,H17,H18,H20,H21,H24,H25,H26, H27,H28,MMM	2
37	PAOZZ	4730013948345	34623	12340331	ADAPTER,STRAIGHT,PI PART OF KIT P/N	2

(1) ITEM NO	(2) SMR CODE	(3) NSN	(4) CAGEC	(5) PART NUMBER	(6) DESCRIPTION AND USABLE ON CODES(UOC)	(7) QTY
					5705698..... UOC:AVY,A11,A13,A14,A15,A20,A24,A25, A26,A27,B16,B17,B18,HVY,H11,H13,H14, H15,H16,H17,H18,H20,H21,H24,H25,H26, H27,H28,MMM	
38	PAOZZ	4730000243971	19207	12339884-1	CLAMP,HOSE PART OF KIT P/N 5705698.. UOC:AVY,A11,A13,A14,A15,A20,A24,A25, A26,A27,B16,B17,B18,HVY,H11,H13,H14, H15,H16,H17,H18,H20,H21,H24,H25,H26, H27,H28,MMM	2
39	PAOZZ	4720013162538	9C234	12338553-1	HOSE,NONMETALLIC PART OF KIT P/N 5705698..... UOC:AVY,A11,A13,A14,A15,A20,A24,A25, A26,A27,B16,B17,B18,HVY,H11,H13,H14, H15,H16,H17,H18,H20,H21,H24,H25,H26, H27,H28,MMM	1
40	PAOZZ	5305000680508	80204	B1821BH025C075N	SCREW,CAP,HEXAGON H 1/4-20 X .75 PART OF KIT P/N 5705698..... UOC:AVY,A11,A13,A14,A15,A20,A24,A25, A26,A27,B16,B17,B18,HVY,H11,H13,H14, H15,H16,H17,H18,H20,H21,H24,H25,H26, H27,H28,MMM	1
41	PAOZZ	3040011975510	34623	12340829-1	CABLE,CONTROL PART OF KIT P/N 5705698..... UOC:AVY,A11,A13,A14,A15,A20,A24,A25, A26,A27,B16,B17,B18,HVY,H11,H13,H14, H15,H16,H17,H18,H20,H21,H24,H25,H26, H27,H28,MMM	1
42	PAOZZ	5340009936207	96906	MS21333-99	CLAMP,LOOP PART OF KIT P/N 5705698.. UOC:AVY,A11,A13,A14,A15,A20,A24,A25, A26,A27,B16,B17,B18,HVY,H11,H13,H14, H15,H16,H17,H18,H20,H21,H24,H25,H26, H27,H28,MMM	1
43	KFFZZ		19207	12340706	TEMPLATE PART OF KIT P/N 5705698.... UOC:AVY,A11,A13,A14,A15,A20,A24,A25, A26,A27,B16,B17,B18,HVY,H11,H13,H14, H15,H16,H17,H18,H20,H21,H24,H25,H26, H27,H28,MMM	1
44	PAOZZ	4720013946170	19207	12339265-10	HOSE,AIR DUCT PART OF KIT P/N 5705698..... UOC:AVY,A11,A13,A14,A15,A20,A24,A25, A26,A27,B16,B17,B18,HVY,H11,H13,H14, H15,H16,H17,H18,H20,H21,H24,H25,H26, H27,H28,MMM	1

END OF FIGURE

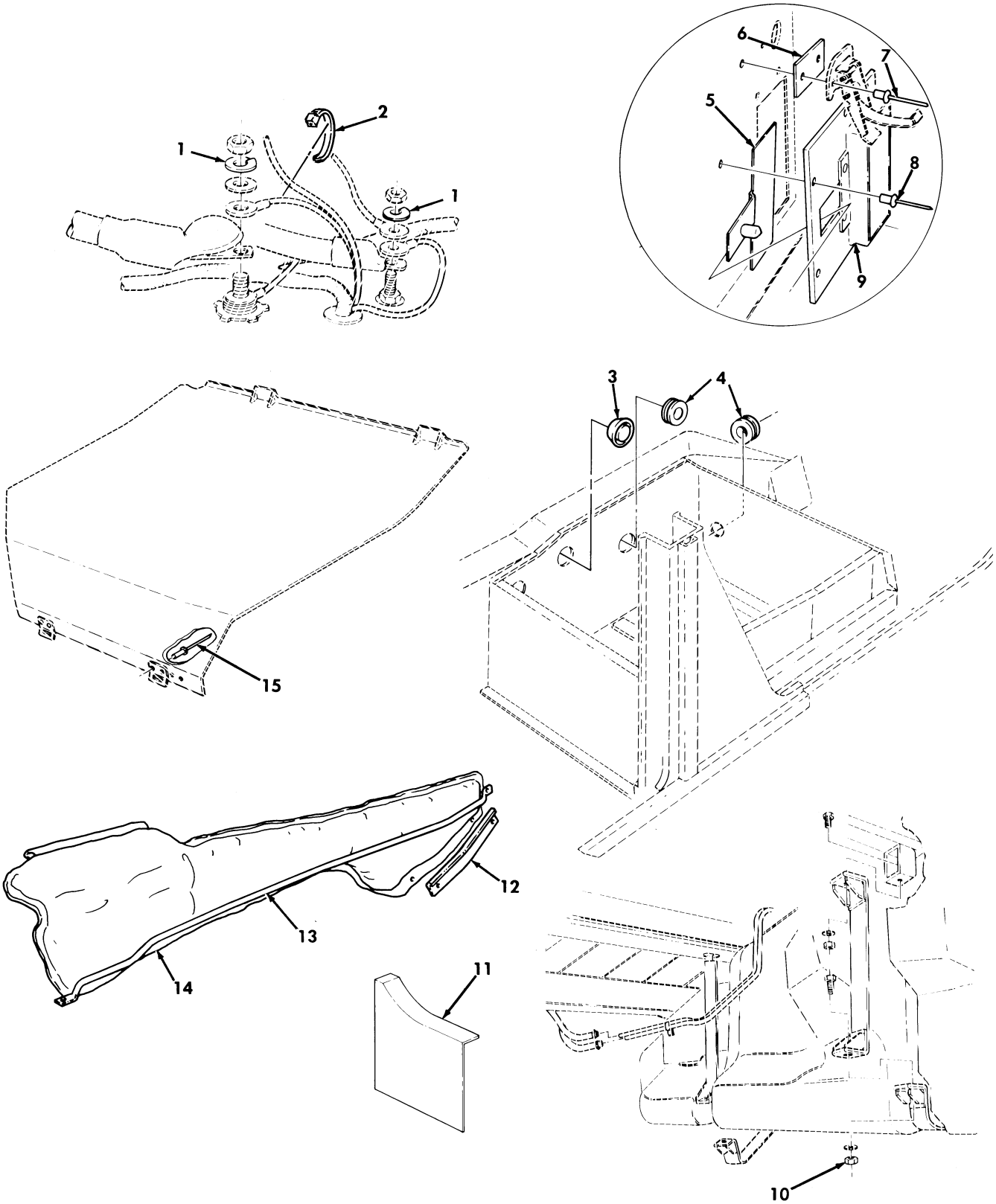

Figure 369. Arctic Kit, Battery Box Components, Insulation, and Control Box Connector.

(1) ITEM NO	(2) SMR CODE	(3) NSN	(4) CAGEC	(5) PART NUMBER	(6) DESCRIPTION AND USABLE ON CODES(UOC)	(7) QTY
					GROUP 3303 WINTERIZATION KITS	
					FIG. 369 ARCTIC KIT,BATTERY BOX COMPONENTS,INSULATION,AND CONTROL BOX CONNECTOR	
1	PAOZZ	5310005845272	96906	MS35338-48	WASHER,LOCK 1/2,PART OF KIT P/N 5705698..... UOC:AVY,A11,A13,A14,A15,A20,A24,A25, A26,A27,B16,B17,B18,HVY,H11,H13,H14, H15,H16,H17,H18,H20,H21,H24,H25,H26, H27,H28,MMM	2
2	PAOZZ	5975010345871	96906	MS3367-7-0	STRAP,TIEDOWN,ELECT PART OF KIT P/N 5705698..... UOC:AVY,A11,A13,A14,A15,A20,A24,A25, A26,A27,B16,B17,B18,HVY,H11,H13,H14, H15,H16,H17,H18,H20,H21,H24,H25,H26, H27,H28,MMM	1
3	PAOZZ	5340013950812	19207	12340791	PLUG,EXPANSION PART OF KIT P/N 5705698..... UOC:AVY,A11,A13,A14,A15,A20,A24,A25, A26,A27,B16,B17,B18,HVY,H11,H13,H14, H15,H16,H17,H18,H20,H21,H24,H25,H26, H27,H28,MMM	3
4	PAOZZ	5325002766091	96906	MS35489-19	GROMMET,NONMETALLIC PART OF KIT P/N 5705698..... UOC:AVY,A11,A13,A14,A15,A20,A24,A25, A26,A27,B16,B17,B18,HVY,H11,H13,H14, H15,H16,H17,H18,H20,H21,H24,H25,H26, H27,H28,MMM	2
5	PAOZZ	2540014073296	34623	12342572	DOOR ASSEMBLY,ARCTI PART OF KIT P/N 5705698..... UOC:AVY,A11,A13,A14,A15,A20,A24,A25, A26,A27,B16,B17,B18,HVY,H11,H13,H14, H15,H16,H17,H18,H20,H21,H24,H25,H26, H27,H28,MMM	1
6	PAOZZ	5365013942394	19207	12342752	SPACER,PLATE PART OF KIT P/N 5705698 UOC:AVY,A11,A13,A14,A15,A20,A24,A25, A26,A27,B16,B17,B18,HVY,H11,H13,H14, H15,H16,H17,H18,H20,H21,H24,H25,H26, H27,H28,MMM	1
7	PAOZZ	5320012716357	19207	12339355-1	RIVET,BLIND PART OF KIT P/N 5705698. UOC:AVY,A11,A13,A14,A15,A20,A24,A25, A26,A27,B16,B17,B18,HVY,H11,H13,H14, H15,H16,H17,H18,H20,H21,H24,H25,H26, H27,H28,MMM	2
8	PAOZZ	5320011357319	80205	NAS9301BNS-6-03	RIVET,BLIND PART OF KIT P/N 5705698. UOC:AVY,A11,A13,A14,A15,A20,A24,A25, A26,A27,B16,B17,B18,HVY,H11,H13,H14, H15,H16,H17,H18,H20,H21,H24,H25,H26, H27,H28,MMM	4
9	PAOZZ	5340013947853	19207	12342571	PLATE,MOUNTING PART OF KIT P/N 5705698.....	1

(1) ITEM NO	(2) SMR CODE	(3) NSN	(4) CAGEC	(5) PART NUMBER	(6) DESCRIPTION AND USABLE ON CODES(UOC)	(7) QTY
					UOC:AVY,A11,A13,A14,A15,A20,A24,A25, A26,A27,B16,B17,B18,HVY,H11,H13,H14, H15,H16,H17,H18,H20,H21,H24,H25,H26, H27,H28,MMM	
10	PAOZZ	5310009359021	96906	MS51943-35	NUT,SELF-LOCKING,HE 3/8-16 PART OF KIT P/N 5705698..... UOC:AVY,A11,A13,A14,A15,A20,A24,A25, A26,A27,B16,B17,B18,HVY,H11,H13,H14, H15,H16,H17,H18,H20,H21,H24,H25,H26, H27,H28,MMM	4
11	PAOZZ	5340013939371	19207	12342573	BRACKET,DOUBLE ANGL RIGHT BODY SIDE RAIL PART OF KIT P/N 5705698... UOC:AVY,A11,A13,A14,A15,A20,A24,A25, A26,A27,B16,B17,B18,HVY,H11,H13,H14, H15,H16,H17,H18,H20,H21,H24,H25,H26, H27,H28,MMM	1
12	PAOZZ	2590012616851	19207	12339014-2	BEZEL,AUTOMOTIVE TR..... UOC:AVY,A11,A13,A14,A15,A20,A24,A25, A26,A27,B16,B17,B18,HVY,H11,H13,H14, H15,H16,H17,H18,H20,H21,H24,H25,H26, H27,H28,MMM	1
13	PAOZZ	2590012578787	19207	12340591	RETAINER,INTERIOR PART OF KIT P/N 5705698..... UOC:AVY,A11,A13,A14,A20,A24,A25,A26, A27,B16,B17,B18,HVY,H11,H13,H14,H16, H17,H18,H20,H21,H24,H25,H26,H27,H28, MMM	1
13	PAOZZ	2540014525034	19207	12340591-1	RETAINER,INTERIOR PART OF KIT P/N 5705698..... UOC:A15,H15	1
14	PAOZA	2540014611134	19207	12340593-1	INSULATION,THERMAL, PART OF KIT P/N 5705698..... UOC:AVY,A11,A13,A14,A20,A24,A25,A26, A27,B16,B17,B18,HVY,H11,H13,H14,H16, H17,H18,H20,H21,H24,H25,H26,H27,H28, MMM	1
14	PAOZA	2540014611134	34623	12340593-1	INSULATION,THERMAL, PART OF KIT P/N 5705698..... UOC:A15,H15	1
15	PAOZZ	5320011435079	80205	NAS9301BNS-4-04	RIVET,BLIND PART OF KIT P/N 5705698. UOC:A11,A13,A14,A20,A24,A25,A26,A27, B17,B18,B20,B24,B25,C17,H11,H13,H14, H15,H16,H17,H18,H20,H21,H24,H25,H26, H27,H28,MMM	2

END OF FIGURE

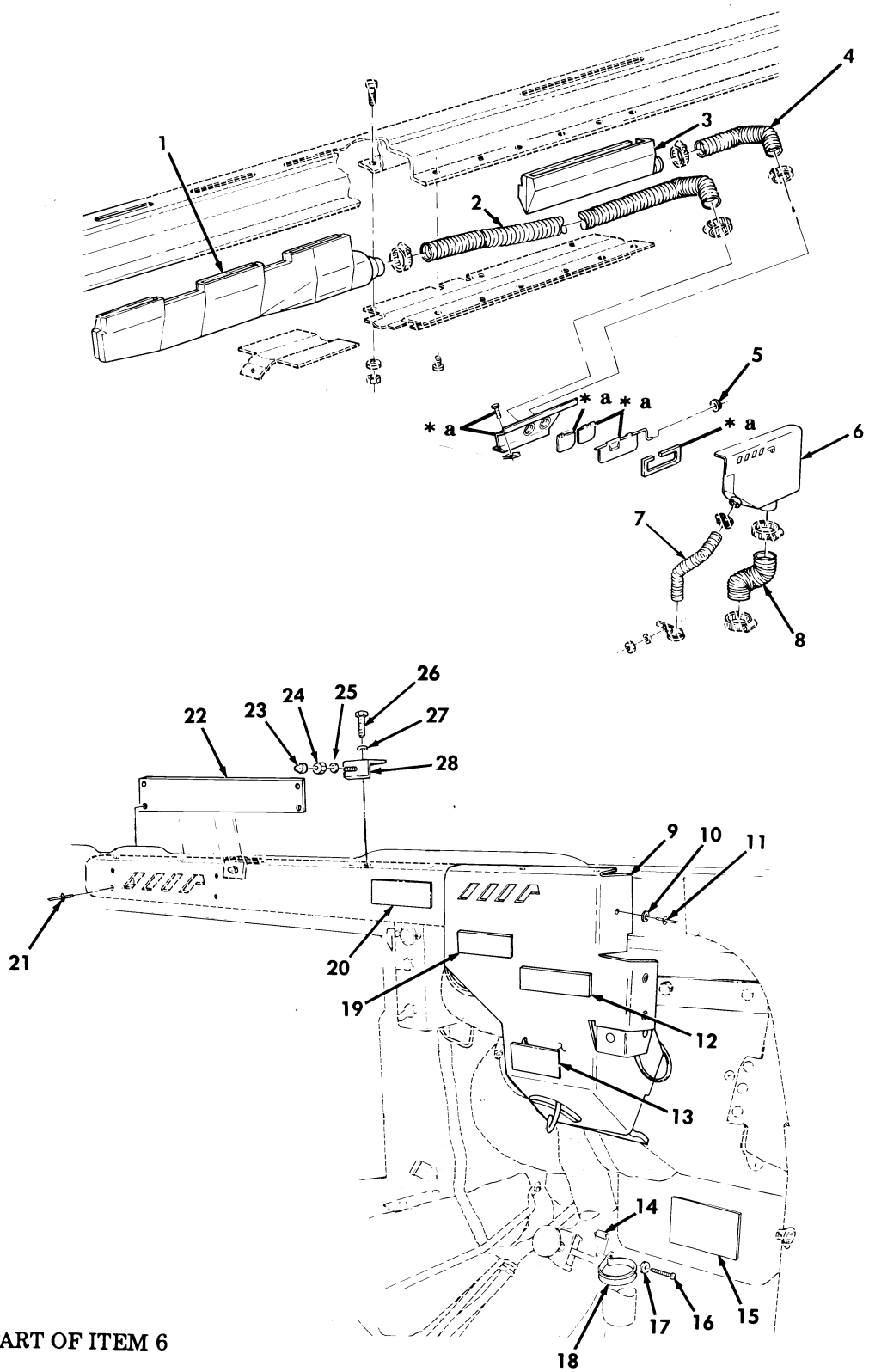

* a PART OF ITEM 6

Figure 370. Arctic Kit, Diverter Box, Defroster, Heater Ducting, and Radio Rack Bracket.

(1) ITEM NO	(2) SMR CODE	(3) NSN	(4) CAGEC	(5) PART NUMBER	(6) DESCRIPTION AND USABLE ON CODES(UOC)	(7) QTY
					GROUP 3303 WINTERIZATION KITS	
					FIG. 370 ARCTIC KIT,DIVERTER BOX, DEFROSTER,HEATER DUCTING,AND RADIO RACK BRACKET	
1	PFOZZ	2540012573742	34623	12339289-2	VENTILATOR,AIR CIRC L.H.,PART OF KIT P/N 5705698..... UOC:AVY,A11,A13,A14,A15,A20,A24,A25, A26,A27,B16,B17,B18,HVY,H11,H13,H14, H15,H16,H17,H18,H20,H21,H24,H25,H26, H27,H28,MMM	1
2	PAOZZ	4720013946166	19207	12339265-6	HOSE,AIR DUCT PART OF KIT P/N 5705698..... UOC:AVY,A11,A13,A14,A15,A20,A24,A25, A26,A27,B16,B17,B18,HVY,H11,H13,H14, H15,H16,H17,H18,H20,H21,H24,H25,H26, H27,H28,MMM	1
3	PAOZZ	2540013905711	34623	5591935	VENTILATOR,AIR CIRC R.H.,PART OF KIT P/N 5705698..... UOC:AVY,A11,A13,A14,A15,A20,A24,A25, A26,A27,B16,B17,B18,HVY,H11,H13,H14, H15,H16,H17,H18,H20,H21,H24,H25,H26, H27,H28,MMM	1
4	PAOZZ	4720013256985	19207	12339265-7	HOSE,AIR DUCT PART OF KIT P/N 5705698..... UOC:AVY,A11,A13,A14,A15,A20,A24,A25, A26,A27,B16,B17,B18,HVY,H11,H13,H14, H15,H16,H17,H18,H20,H21,H24,H25,H26, H27,H28,MMM	1
5	PAOZZ	5340013327599	19207	12340258	BUTTON,PLUG PART OF KIT P/N 5705698 UOC:AVY,A11,A13,A14,A15,A20,A24,A25, A26,A27,B16,B17,B18,HVY,H11,H13,H14, H15,H16,H17,H18,H20,H21,H24,H25,H26, H27,H28,MMM	1
6	PFOZZ	2540013954202	19207	12342570	VENTILATOR,AIR CIRC PART OF KIT P/N 5705698..... UOC:AVY,A11,A13,A14,A15,A20,A24,A25, A26,A27,B16,B17,B18,HVY,H11,H13,H14, H15,H16,H17,H18,H20,H21,H24,H25,H26, H27,H28,MMM	1
7	PAOZZ	4720014510894	19207	12339265-16	HOSE,AIR DUCT PART OF KIT P/N 5705698..... UOC:AVY,A11,A13,A14,A15,A20,A24,A25, A26,A27,B16,B17,B18,HVY,H11,H13,H14, H15,H16,H17,H18,H20,H21,H24,H25,H26, H27,H28,MMM	1
8	PAOZZ	4720013946170	19207	12339265-10	HOSE,AIR DUCT PART OF KIT P/N 5705698..... UOC:AVY,A11,A13,A14,A15,A20,A24,A25, A26,A27,B16,B17,B18,HVY,H11,H13,H14, H15,H16,H17,H18,H20,H21,H24,H25,H26, H27,H28,MMM	1

(1) ITEM NO	(2) SMR CODE	(3) NSN	(4) CAGEC	(5) PART NUMBER	(6) DESCRIPTION AND USABLE ON CODES(UOC)	(7) QTY
9	PAOZZ	2540012546511	19207	12340470	ARCTIC COVER,DIVERT PART OF KIT P/N 5705698..... UOC:AVY,A11,A13,A14,A15,A20,A24,A25, A26,A27,B16,B17,B18,HVY,H11,H13,H14, H15,H16,H17,H18,H20,H21,H24,H25,H26, H27,H28,MMM	1
10	PAOZZ	2540012546511	24617	11500362	WASHER,FLAT PART OF KIT P/N 5705698 UOC:AVY,A11,A13,A14,A15,A20,A24,A25, A26,A27,B16,B17,B18,HVY,H11,H13,H14, H15,H16,H17,H18,H20,H21,H24,H25,H26, H27,H28,MMM	1
11	PAOZZ	5320010232529	81349	M24243/1-A404	RIVET,BLIND PART OF KIT P/N 5705698 UOC:AVY,A11,A13,A14,A15,A20,A24,A25, A26,A27,B16,B17,B18,HVY,H11,H13,H14, H15,H16,H17,H18,H20,H21,H24,H25,H26, H27,H28,MMM	4
12	PAOZZ	9905013973196	19207	12342648	PLATE,INSTRUCTION PART OF KIT P/N 5705698..... UOC:AVY,A11,A13,A14,A15,A20,A24,A25, A26,A27,B16,B17,B18,HVY,H11,H13,H14, H15,H16,H17,H18,H20,H21,H24,H25,H26, H27,H28,MMM	1
13	PAOZZ	9905012487656	19207	12339108	PLATE,INSTRUCTION PART OF KIT P/N 5705698..... UOC:AVY,A11,A13,A14,A15,A20,A24,A25, A26,A27,B16,B17,B18,HVY,H11,H13,H14, H15,H16,H17,H18,H20,H21,H24,H25,H26, H27,H28,MMM	1
14	PAOZZ	5365013940440	19207	12342751	SPACER,SLEEVE PART OF KIT P/N 5705698..... UOC:AVY,A11,A13,A14,A15,A20,A24,A25, A26,A27,B16,B17,B18,HVY,H11,H13,H14, H15,H16,H17,H18,H20,H21,H24,H25,H26, H27,H28,MMM	1
15	PAOZZ	7690014078248	19207	12342806	MARKER,IDENTIFICATI PART OF KIT P/N 5705698..... UOC:AVY,A11,A13,A14,A15,A20,A24,A25, A26,A27,B16,B17,B18,HVY,H11,H13,H14, H15,H16,H17,H18,H20,H21,H24,H25,H26, H27,H28,MMM	1
16	PAOZZ	5305013943543	24617	9415778	SCREW,CAP,HEXAGON H PART OF KIT P/N 5705698..... UOC:AVY,A11,A13,A14,A15,A20,A24,A25, A26,A27,B16,B17,B18,HVY,H11,H13,H14, H15,H16,H17,H18,H20,H21,H24,H25,H26, H27,H28,MMM	1
17	PAOZZ	5310000453296	30379	120217	WASHER,LOCK #10,PART OF KIT P/N 5705698..... UOC:A11,A13,A14,A20,A24,A25,A26,A27, B17,B18,B20,B24,B25,C17,H11,H13,H14, H15,H16,H17,H18,H20,H21,H24,H25,H26, H27,H28,MMM	1
18	PAOZZ	5340001934111	96906	MS21333-86	CLAMP,LOOP PART OF KIT P/N 5705698.	1

(1) ITEM NO	(2) SMR CODE	(3) NSN	(4) CAGEC	(5) PART NUMBER	(6) DESCRIPTION AND USABLE ON CODES(UOC)	(7) QTY
					UOC:AVY,A11,A13,A14,A15,A20,A24,A25, A26,A27,B16,B17,B18,HVY,H11,H13,H14, H15,H16,H17,H18,H20,H21,H24,H25,H26, H27,H28,MMM	
19	PAOZZ	9905012039994	19207	12339100	PLATE,INSTRUCTION PART OF KIT P/N 5705698..... UOC:AVY,A11,A13,A14,A15,A20,A24,A25, A26,A27,B16,B17,B18,HVY,H11,H13,H14, H15,H16,H17,H18,H20,H21,H24,H25,H26, H27,H28,MMM	1
20	PAOZZ	9905011934065	19207	12339106	PLATE,INSTRUCTION PART OF KIT P/N 5705698..... UOC:AVY,A11,A13,A14,A15,A20,A24,A25, A26,A27,B16,B17,B18,HVY,H11,H13,H14, H15,H16,H17,H18,H20,H21,H24,H25,H26, H27,H28,MMM	1
21	PAOZZ	5320010195694	81349	M24243/1A402	RIVET,BLIND PART OF KIT P/N 5705698 UOC:AVY,A11,A13,A14,A15,A20,A24,A25, A26,A27,B16,B17,B18,HVY,H11,H13,H14, H15,H16,H17,H18,H20,H21,H24,H25,H26, H27,H28,MMM	4
22	PAOZZ	5340013947288	19207	12342754	COVER,ACCESS PART OF KIT P/N 5705698 UOC:AVY,A11,A13,A14,A15,A20,A24,A25, A26,A27,B16,B17,B18,HVY,H11,H13,H14, H15,H16,H17,H18,H20,H21,H24,H25,H26, H27,H28,MMM	1
23	PAOZZ	5340011744894	81349	M5501/11-F1	CAP,PROTECTIVE DUST PART OF KIT P/N 5705698..... UOC:AVY,A11,A13,A14,A15,A20,A24,A25, A26,A27,B16,B17,B18,HVY,H11,H13,H14, H15,H16,H17,H18,H20,H21,H24,H25,H26, H27,H28,MMM	2
24	PAOZZ	5310000120367	24617	120367	NUT,PLAIN,HEXAGON PART OF KIT P/N 5705698..... UOC:AVY,A11,A13,A14,A15,A20,A24,A25, A26,A27,B16,B17,B18,HVY,H11,H13,H14, H15,H16,H17,H18,H20,H21,H24,H25,H26, H27,H28,MMM	2
25	PAOZZ	5310000446188	24617	446188	WASHER,FLAT PART OF KIT P/N 5705698 UOC:A11,A13,A14,A20,A24,A25,A26,A27, B17,B18,B20,B24,B25,C17,H11,H13,H14, H15,H16,H17,H18,H20,H21,H24,H25,H26, H27,H28,MMM	2
26	PAOZZ	5305005434372	80204	B1821BH038C075N	SCREW,CAP,HEXAGON H PART OF KIT P/N 5705698..... UOC:AVY,A11,A13,A14,A15,A20,A24,A25, A26,A27,B16,B17,B18,HVY,H11,H13,H14, H15,H16,H17,H18,H20,H21,H24,H25,H26, H27,H28,MMM	2
27	PAOZZ	5310000446212	24617	446212	WASHER,FLAT PART OF KIT P/N 5705698 UOC:AVY,A11,A13,A14,A15,A20,A24,A25, A26,A27,B16,B17,B18,HVY,H11,H13,H14, H15,H16,H17,H18,H20,H21,H24,H25,H26,	2

(1) ITEM NO	(2) SMR CODE	(3) NSN	(4) CAGEC	(5) PART NUMBER	(6) DESCRIPTION AND USABLE ON CODES(UOC)	(7) QTY
					H27,H28,MMM	
28	PAOZZ	2590014398268	34623	12446763	BRACKET,ANGLE PART OF KIT P/N 5705698..... UOC:AVY,A11,A13,A14,A15,A20,A24,A25, A26,A27,B16,B17,B18,HVY,H11,H13,H14, H15,H16,H17,H18,H20,H21,H24,H25,H26, H27,H28,MMM	2

END OF FIGURE

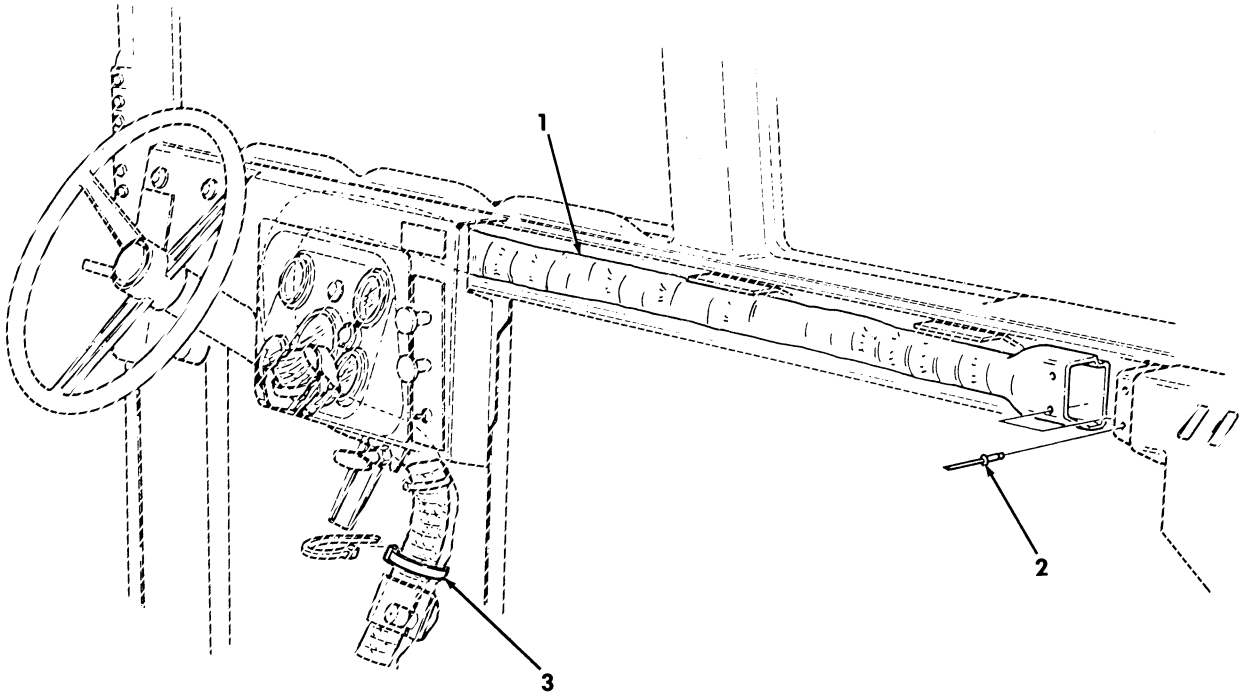

Figure 371. Arctic Kit, Heater Duct Assembly.

(1) ITEM NO	(2) SMR CODE	(3) NSN	(4) CAGEC	(5) PART NUMBER	(6) DESCRIPTION AND USABLE ON CODES(UOC)	(7) QTY
					GROUP 3303 WINTERIZATION KITS	
					FIG. 371 ARCTIC KIT,HEATER DUCT ASSEMBLY	
1	PAOZZ		19207	12447054	DUCT ASSEMBLY PART OF KIT P/N 5705698..... UOC:AVY,A11,A13,A14,A15,A20,A24,A25, A26,A27,B16,B17,B18,HVY,H11,H13,H14, H15,H16,H17,H18,H20,H21,H24,H25,H26, H27,H28,MMM	1
2	PAOZZ	5320010195694	81349	M24243/1A402	RIVET,BLIND PART OF KIT P/N 5705698 UOC:AVY,A11,A13,A14,A15,A20,A24,A25, A26,A27,B16,B17,B18,HVY,H11,H13,H14, H15,H16,H17,H18,H20,H21,H24,H25,H26, H27,H28,MMM	2
3	PAOZZ	5975010345871	96906	MS3367-7-0	STRAP,TIEDOWN,ELECT PART OF KIT P/N 5705698..... UOC:AVY,A11,A13,A14,A15,A20,A24,A25, A26,A27,B16,B17,B18,HVY,H11,H13,H14, H15,H16,H17,H18,H20,H21,H24,H25,H26, H27,H28,MMM	3

END OF FIGURE

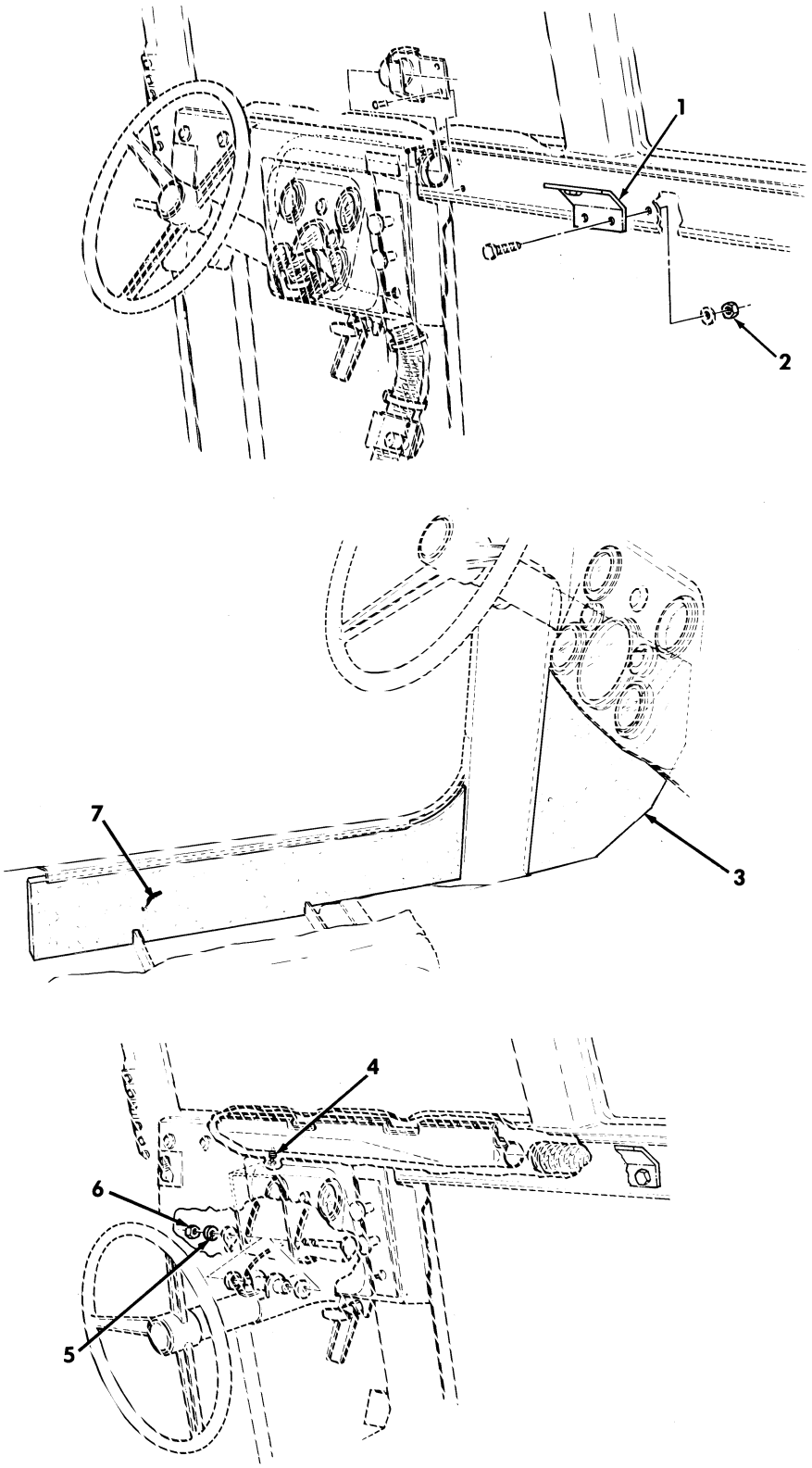

Figure 372. Arctic Kit, Diverter Box, Ducting, Insulation, and Radio Mounting Brackets.

(1) ITEM NO	(2) SMR CODE	(3) NSN	(4) CAGEC	(5) PART NUMBER	(6) DESCRIPTION AND USABLE ON CODES(UOC)	(7) QTY
					GROUP 3303 WINTERIZATION KITS	
					FIG. 372 ARCTIC KIT,DIVERTER BOX, DUCTING,INSULATION,AND RADIO MOUNTING BRACKETS	
1	PFOZZ	5340014764374	19207	12446765	BRACKET,DOUBLE ANGL..... UOC:AVY,A11,A13,A14,A15,A20,A24,A25, A26,A27,B16,B17,B18,HVY,H11,H13,H14, H15,H16,H17,H18,H20,H21,H24,H25,H26, H27,H28,MMM	1
2	PAOZZ	5310014326727	24617	9419471	NUT,SELF-LOCKING,HE PART OF KIT P/N 5705698..... UOC:AVY,A11,A13,A14,A15,A20,A24,A25, A26,A27,B16,B17,B18,HVY,H11,H13,H14, H15,H16,H17,H18,H20,H21,H24,H25,H26, H27,H28,MMM	4
3	PAOZZ	2540013953979	9C234	12342755-2	INSULATION,THERMAL PART OF KIT P/N 5705698..... UOC:AVY,A11,A13,A14,A15,A20,A24,A25, A26,A27,B16,B17,B18,HVY,H11,H13,H14, H15,H16,H17,H18,H20,H21,H24,H25,H26, H27,H28,MMM	1
4	PAOZZ	5325012097843	19207	12339402	GROMMET,NONMETALLIC PART OF KIT P/N 5705698..... UOC:AVY,A11,A13,A14,A15,A20,A24,A25, A26,A27,B16,B17,B18,HVY,H11,H13,H14, H15,H16,H17,H18,H20,H21,H24,H25,H26, H27,H28,MMM	1
5	PAOZZ	5310006379541	96906	MS35338-46	WASHER,LOCK 3/8 PART OF KIT P/N 5705698..... UOC:AVY,A11,A13,A14,A15,A20,A24,A25, A26,A27,B16,B17,B18,HVY,H11,H13,H14, H15,H16,H17,H18,H20,H21,H24,H25,H26, H27,H28,MMM	1
6	PAOZZ	5310009359021	96906	MS51943-35	NUT,SELF-LOCKING,HE PART OF KIT P/N 5705698..... UOC:AVY,A11,A13,A14,A15,A20,A24,A25, A26,A27,B16,B17,B18,HVY,H11,H13,H14, H15,H16,H17,H18,H20,H21,H24,H25,H26, H27,H28,MMM	1
7	PAOZZ	2540013952230	9C234	12342756	INSULATION,THERMAL PART OF KIT P/N 5705698..... UOC:AVY,A11,A13,A14,A15,A20,A24,A25, A26,A27,B16,B17,B18,HVY,H11,H13,H14, H15,H16,H17,H18,H20,H21,H24,H25,H26, H27,H28,MMM	1
KIT	PDFZZ	2540013170728	34623	5705698	PARTS KIT,VEHICULAR..... UOC:AVY,A11,A13,A14,A15,A20,A24,A25, A26,A27,B16,B17,B18,HVY,H11,H13,H14, H15,H16,H17,H18,H20,H21,H24,H25,H26, H27,H28,MMM	1
					ADAPTER,CONNECTOR (1) 366-31	

(1) ITEM NO	(2) SMR CODE	(3) NSN	(4) CAGEC	(5) PART NUMBER	(6) DESCRIPTION AND USABLE ON CODES(UOC)	(7) QTY
					ADAPTER,CONNECTOR (1) 366-32	
					ADAPTER,STRAIGHT,PI(1) 366-12	
					ADAPTER,STRAIGHT,PI(1) 366-14	
					ADAPTER,STRAIGHT,PI(1) 366-24	
					ADAPTER,STRAIGHT,PI(1) 368-37	
					ANCHOR,STRAP (1) 365-19	
					ARCTIC COVER,DIVERT(1) 370-9	
					BEZEL,AUTOMOTIVE TR(1) 368-33	
					BRACKET,DOUBLE ANGL(1) 366-27	
					BRACKET,DOUBLE ANGL(1) 369-11	
					BRACKET,DOUBLE ANGL(2) 370-28	
					BRACKET,MOUNTING (2) 368-21	
					BUTTON,PLUG (1) 370-5	
					CABLE,CONTROL (1) 368-41	
					CAP,FILLER,OPENING (1) 366-1	
					CAP,PROTECTIVE (2) 370-23	
					CAP,TUBE (1) 366-15	
					CLAMP,HOSE (2) 364-3	
					CLAMP,HOSE (2) 365-10	
					CLAMP,HOSE (2) 366-21	
					CLAMP,HOSE (3) 368-3	
					CLAMP,HOSE (2) 368-14	
					CLAMP,HOSE (2) 368-20	
					CLAMP,HOSE (2) 368-38	
					CLAMP,LOOP (1) 365-21	
					CLAMP,LOOP (1) 366-5	
					CLAMP,LOOP (1) 366-7	
					CLAMP,LOOP (1) 366-20	
					CLAMP,LOOP (1) 366-28	
					CLAMP,LOOP (1) 368-42	
					CLAMP,LOOP (1) 370-18	
					CONNECTOR,EXHAUST P(1) 365-11	
					CONNECTOR,EXHAUST P(1) 368-13	
					CONNECTOR,EXHAUST P(1) 368-17	
					CONTROL BOX,ELECTRI(1) 366-2	
					COUPLING,PIPE (1) 366-10	
					COVER ACCESS (1) 370-22	
					COVER,ASSEMBLY,COWL(1) 368-4	
					DOOR ASSEMBLY,BATTE(1) 369-5	
					DIVERTER ASSEMBLY (1) 365-6	
					DUCT ASSEMBLY (1) 371-1	
					DUMMY CONNECTOR,PLU(1) 366-34	
					ELBOW,PIPE TO TUBE (2) 366-9	
					ELBOW,PIPE TO TUBE (1) 368-29	
					FILTER,FLUID (1) 368-30	
					FLANGE,PIPE (1) 368-15	
					GASKET,AIR HORN (1) 364-2	
					GROMMET,NONMETALLIC(1) 368-10	
					GROMMET,NONMETALLIC(2) 369-4	
					GROMMET,NONMETALLIC(1) 372-4	
					GUARD,FUEL FILTER (1) 368-35	
					HEATER,VEHICULAR,CO(1) 368-19	
					HOSE,AIR DUCT (1) 368-44	

(1) ITEM NO	(2) SMR CODE	(3) NSN	(4) CAGEC	(5) PART NUMBER	(6) DESCRIPTION AND USABLE ON CODES(UOC)	(7) QTY
					HOSE,AIR DUCT (1) 370-2	
					HOSE,AIR DUCT (1) 370-4	
					HOSE,AIR DUCT (1) 370-7	
					HOSE,AIR DUCT (1) 370-8	
					HOSE,NONMETALLIC (2) 364-4	
					HOSE,NONMETALLIC (1) 366-22	
					HOSE,NONMETALLIC (1) 368-39	
					HOSE,PREFORMED (1) 364-9	
					HOUSING,CENTRIFUGAL(1) 368-6	
					INSULATION (1) 372 3	
					INSULATION,BLANKET (1) 368-31	
					INSULATION,THERMAL (1) 372-7	
					INSULATION,TUNNEL (1) 369-14	
					INSULATION,TUNNEL (1) 369-14	
					LEAD,ELECTRICAL (1) 366-29	
					MARKER,IDENTIFICATI(1) 370-15	
					NUT,PLAIN,HEXAGON (2) 370-24	
					NUT,SELF-LOCKING,HE(2) 368-36	
					NUT,SELF-LOCKING,HE(1) 364-7	
					NUT,SELF-LOCKING,HE(10) 365-18	
					NUT,SELF-LOCKING,HE(1) 365-22	
					NUT,SELF-LOCKING,HE(2) 366-30	
					NUT,SELF-LOCKING,HE(4) 368-18	
					NUT,SELF-LOCKING,HE(9) 368-32	
					NUT,SELF-LOCKING,HE(2) 368-36	
					NUT,SELF-LOCKING,HE(4) 369-10	
					NUT,SELF-LOCKING,HE(4) 372-2	
					NUT,SELF-LOCKING,HE(1) 372-6	
					PIN,COTTER (4) 365-8	
					PIN,COTTER (3) 368-12	
					PIN,COTTER (1) 368-8	
					PIPE,EXHAUST (1) 365-7	
					PIPE,EXHAUST (1) 365-9	
					PIPE,EXHAUST (1) 365-12	
					PLATE,IDENTIFICATIO(1) 370-20	
					PLATE,INSTRUCTION (1) 370-12	
					PLATE,INSTRUCTION (1) 370-13	
					PLATE,INSTRUCTION (1) 370-19	
					PLATE,MOUNTING (1) 369-9	
					PLUG,EXPANSION (3) 369-3	
					PUMP,FUEL,ELECTRICA(1) 366-25	
					REGULATOR,AIR DUCT (1) 368-2	
					RETAINER,INTERIOR I(1) 369-13	
					RETAINER,INTERIOR I(1) 369-13	
					RIVET,BLIND (2) 365-1	
					RIVET,BLIND (4) 365-14	
					RIVET,BLIND (4) 365-26	
					RIVET,BLIND (8) 368-5	
					RIVET,BLIND (2) 369-7	
					RIVET,BLIND (4) 369-8	
					RIVET,BLIND (2) 369-15	
					RIVET,BLIND (4) 370-11	
					RIVET,BLIND (4) 370-21	

(1) ITEM NO	(2) SMR CODE	(3) NSN	(4) CAGEC	(5) PART NUMBER	(6) DESCRIPTION AND USABLE ON CODES(UOC)	(7) QTY
					RIVET,BLIND (2) 371-3	
					SCREW,CAP,HEXAGON H(2) 365-4	
					SCREW,CAP,HEXAGON H(1) 365-13	
					SCREW,CAP,HEXAGON H(2) 366-17	
					SCREW,CAP,HEXAGON H(4) 368-24	
					SCREW,CAP,HEXAGON H(8) 368-34	
					SCREW,CAP,HEXAGON H(1) 368-40	
					SCREW,CAP,HEXAGON H(1) 370-16	
					SCREW,CAP,HEXAGON H(2) 370-26	
					SCREW,MACHINE (1) 365-20	
					SCREW,MACHINE (1) 368-7	
					SCREW,MACHINE (2) 368-27	
					SCREW,TAPPING (2) 366-3	
					SCREW,TAPPING (2) 366-6	
					SEAL,NONMETALLIC (1) 368-1	
					SETSCREW (1) 368-9	
					SHELL,ELECTRICAL CO(1) 366-33	
					SHIELD,HEATER DUCT (1) 368-11	
					SHROUD,ARTIC (1) 365-23	
					SPACER,PLATE (1) 368-25	
					SPACER,PLATE (1) 369-6	
					SPACER,SLEEVE (1) 370-14	
					STRAP,TIEDOWN,ELECT(1) 369-2	
					STRAP,TIEDOWN,ELECT(3) 371-3	
					STUD,SHOULDERED (7) 365-17	
					TEE,PIPE (1) 366-13	
					TEMPLATE (1) 365-2	
					TEMPLATE (2) 365-3	
					TEMPLATE (1) 365-15	
					TEMPLATE (1) 366-8	
					TEMPLATE (1) 366-35	
					TEMPLATE (1) 366-36	
					TEMPLATE (1) 368-43	
					TEMPLATE,FUEL PUMP (1) 366-37	
					THERMASEAL,HEATER (1) 368-16	
					TUBE ASSEMBLY (1) 366-11	
					TUBE ASSEMBLY,METAL(1) 364-5	
					TUBE ASSEMBLY,METAL(1) 366-15	
					TUBE ASSEMBLY,METAL(1) 366-18	
					TUBE ASSEMBLY,METAL(1) 366-19	
					TUBE ASSEMBLY,METAL(1) 366-23	
					TUBE ASSEMBLY,METAL(1) 368-28	
					TUBE,BENT,METALLIC (1) 364-8	
					VENTILATOR,AIR CIRC(1) 370-1	
					VENTILATOR,AIR CIRC(1) 370-3	
					VENTILATOR,AIR CIRC(1) 370-6	
					WASHER,FLAT (2) 364-1	
					WASHER,FLAT (10) 365-16	
					WASHER,FLAT (4) 366-16	
					WASHER,FLAT (22) 368-22	
					WASHER,FLAT (2) 368-26	
					WASHER,FLAT (1) 370-10	
					WASHER,FLAT (2) 370-25	

(1) ITEM NO	(2) SMR CODE	(3) NSN	(4) CAGEC	(5) PART NUMBER	(6) DESCRIPTION AND USABLE ON CODES(UOC)	(7) QTY
					WASHER,FLAT (2) 370-27	
					WASHER,LOCK (1) 364-6	
					WASHER,LOCK (2) 365-5	
					WASHER,LOCK (2) 366-4	
					WASHER,LOCK (4) 368-23	
					WASHER,LOCK (2) 369-1	
					WASHER,LOCK (1) 370-17	
					WASHER,LOCK (1) 372-5	

END OF FIGURE

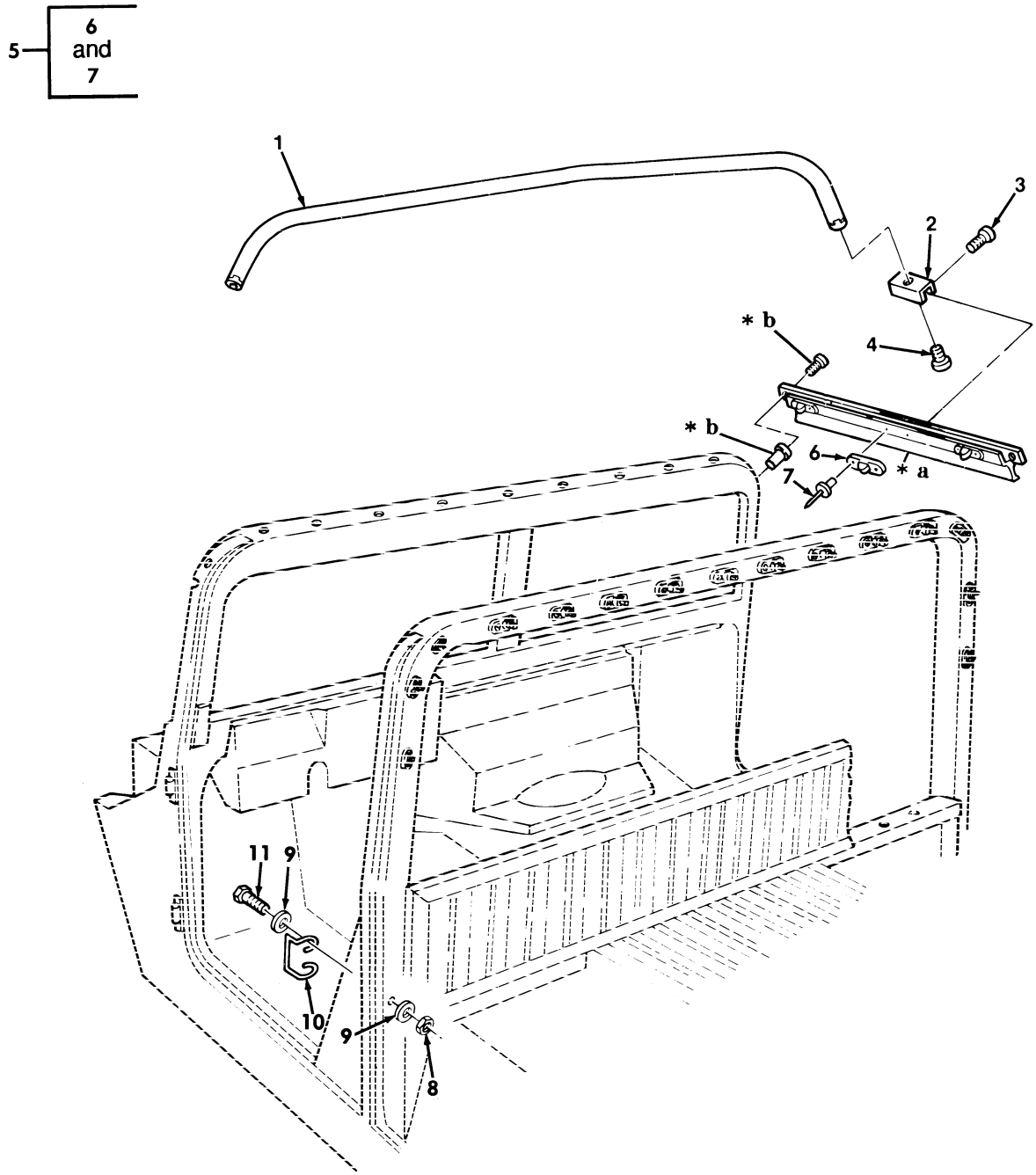

* a PART OF ITEM 5
* b SEE FIGURE 225

Figure 373. Arctic Kit, Two Man Crew, Bow, and Mounting Components.

(1) ITEM NO	(2) SMR CODE	(3) NSN	(4) CAGEC	(5) PART NUMBER	(6) DESCRIPTION AND USABLE ON CODES(UOC)	(7) QTY
					GROUP 3303 WINTERIZATION KITS	
					FIG. 373 ARCTIC KIT,TWO MAN CREW,BOW, AND MOUNTING COMPONENTS	
1	PAOZZ	2540012064115	19207	12340713	BOW,VEHICULAR TOP PART OF KIT P/N 57K0137..... UOC:AVY,A13,A14,BVY,HVY,H13,H14,H21, H28,NNN	1
2	PAOZZ	5340012043862	19207	12340239	STRAP,RETAINING PART OF KIT P/N 57K0137..... UOC:AVY,A13,A14,BVY,HVY,H13,H14,H21, H28,NNN	4
3	PAOZZ	5305000593659	96906	MS51958-63	SCREW,MACHINE #10-32 X 1/2 PART OF KIT P/N 57K0137..... UOC:AVY,A13,A14,BVY,HVY,H13,H14,H21, H28,NNN	4
4	PAOZZ	5305000711313	96906	MS51957-77	SCREW,MACHINE 1/4-20 X 3/8 PART OF KIT P/N 57K0137..... UOC:AVY,A13,A14,BVY,HVY,H13,H14,H21, H28,NNN	2
5	PAOZZ	2590011982895	19207	12340603-1	RAIL ASSEMBLY,HAND L.H. PART OF KIT P/N 57K0137..... UOC:AVY,A13,A14,BVY,HVY,H13,H14,H21, H28,NNN	1
5	PAOZZ	2590011974898	19207	12340603-2	RAIL ASSEMBLY,HAND R.H. PART OF KIT P/N 57K0137..... UOC:AVY,A13,A14,BVY,HVY,H13,H14,H21, H28,NNN	1
6	PAOZZ	5325008235999	13940	XB78323-05001	.STUD,TURNBUTTON FAS PART OF KIT P/N 57K0137..... UOC:AVY,A13,A14,BVY,HVY,H13,H14,H21, H28,NNN	3
7	PAOZZ	5320000835009	81349	M24243/1-A403	.RIVET,BLIND 1/8 DIA.,.126-.187 GRIP PART OF KIT P/N 57K0137..... UOC:AVY,A13,A14,BVY,HVY,H13,H14,H21, H28,NNN	6
8	PAOZZ	5310002416658	96906	MS51943-34	NUT,SELF-LOCKING,HE 5/16-24 PART OF KIT P/N 57K0137..... UOC:AVY,A13,A14,BVY,HVY,H13,H14,H21, H28,NNN	4
9	PAOZZ	5310004079566	96906	MS35338-45	WASHER,LOCK 5/16 PART OF KIT P/N 57K0137..... UOC:AVY,A13,A14,BVY,HVY,H13,H14,H21, H28,NNN	4
10	PAOZZ	5340012070717	19207	12339187	BUCKLE PART OF KIT P/N 57K0137..... UOC:AVY,A13,A14,BVY,HVY,H13,H14,H21, H28,NNN	2
11	PAOZZ	5306001822027	19207	7346712	BOLT,MACHINE 5/16-24 PART OF KIT P/N 57K0137..... UOC:AVY,A13,A14,BVY,HVY,H13,H14,H21, H28,NNN	4

END OF FIGURE

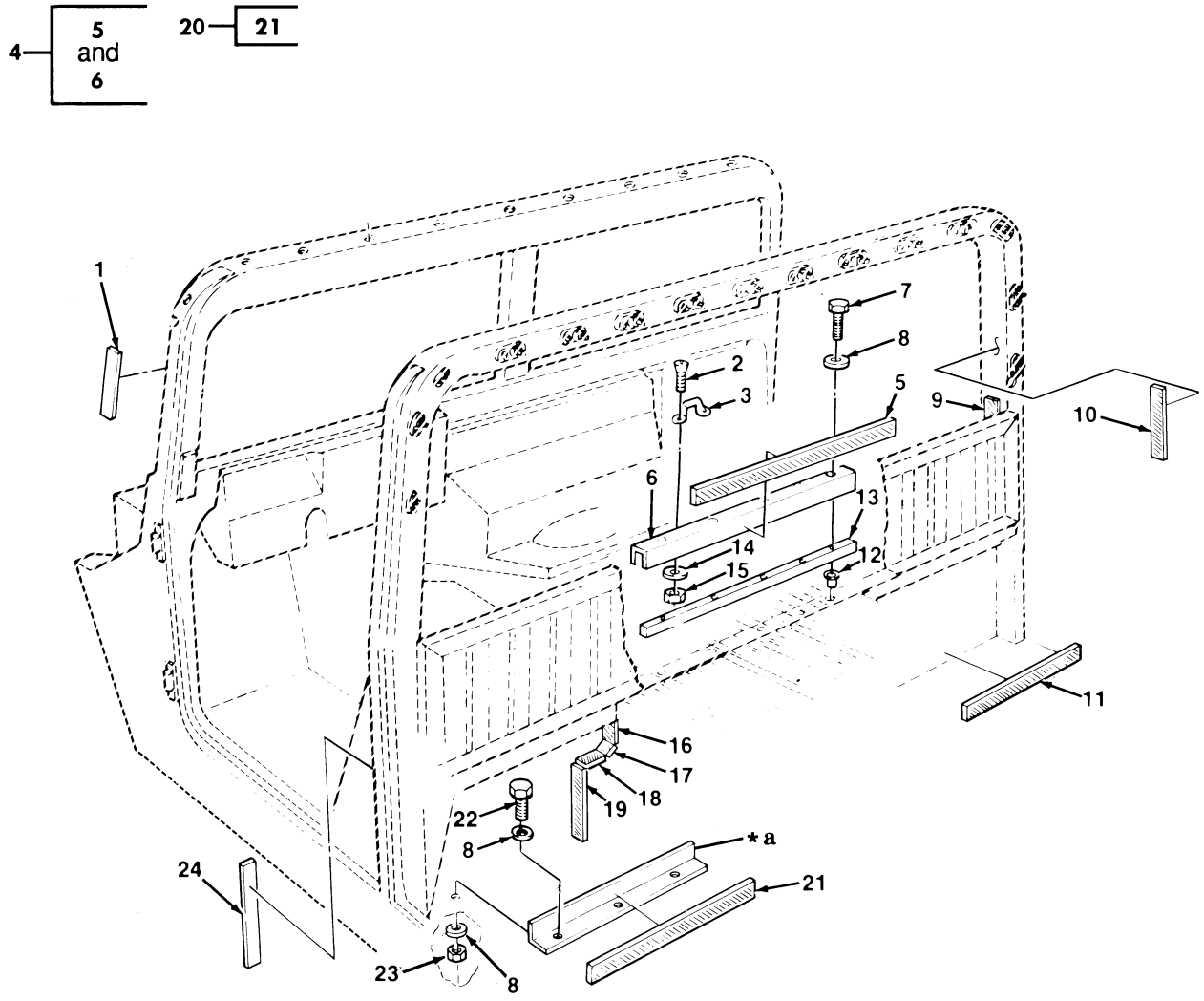

* a PART OF ITEM 20

Figure 374. Arctic Kit, Two Man Crew Curtain Fasteners.

(1) ITEM NO	(2) SMR CODE	(3) NSN	(4) CAGEC	(5) PART NUMBER	(6) DESCRIPTION AND USABLE ON CODES(UOC)	(7) QTY
					GROUP 3303 WINTERIZATION KITS	
					FIG. 374 ARCTIC KIT,TWO MAN CREW CURTAIN FASTENERS	
1	MOOZZ		34623	5589275	INSULATION,FOAM MAKE FROM PLASTIC STRIP,P/N 5741221,12 INCHES LONG PART OF KIT P/N 57K0137..... UOC:AVY,A13,A14,BVY,HVY,H13,H14,H21, H28,NNN	2
2	PAOZZ	5305000888332	96906	MS35190-272	SCREW,MACHINE #10-24 X 5/8 PART OF KIT P/N 57K0137..... UOC:AVY,A13,A14,BVY,HVY,H13,H14,H21, H28,NNN	4
3	PAOZZ	5340004895684	19220	6411-B	LOOP,STRAP FASTENER RART OF KIT P/N 57K0137..... UOC:AVY,A13,A14,BVY,HVY,H13,H14,H21, H28,NNN	2
4	PFOZA	5340014665243	19207	12340708	BRACKET,DOUBLE ANGL PART OF KIT P/N 57K0137..... UOC:AVY,A13,A14,BVY,HVY,H13,H14,H21, H28,NNN	1
5	MOOZZ		19207	12340700-12	.FASTENER,TAPE HOOK MAKE FROM FASTENER,TAPE,HOOK P/N 20197272, 31.75 INCHES..... UOC:AVY,A13,A14,BVY,HVY,H13,H14,H21, H28,NNN	1
6	XAOZZ		19207	12340708-1	.CHANNEL..... UOC:AVY,A13,A14,BVY,HVY,H13,H14,H21, H28,NNN	1
7	PAOZZ	5306012077487	7X677	9422042	BOLT,MACHINE 5/16-18 X 2.00 PART OF KIT P/N 57K0137..... UOC:AVY,A13,A14,BVY,HVY,H13,H14,H21, H28,NNN	4
8	PAOZZ	5310011191024	24617	2436162	WASHER,FLAT 5/16 PART OF KIT P/N 57K0137..... UOC:AVY,A13,A14,BVY,HVY,H13,H14,H21, H28,NNN	10
9	MOOZZ		19207	12340700-7	FASTENER,TAPE,HOOK MAKE FROM FASTENER,TAPE,HOOK P/N 20197272, 6.50 INCHES PART OF KIT P/N 57K0137. UOC:AVY,A13,A14,BVY,HVY,H13,H14,H21, H28,NNN	2
10	MOOZZ		19207	12340700-10	FASTENER,TAPE,HOOK MAKE FROM FASTENER,TAPE,HOOK P/N 20197272,24 INCHES PART OF KIT P/N 57K0137..... UOC:AVY,A13,A14,BVY,HVY,H13,H14,H21, H28,NNN	2
11	MOOZZ		19207	12340700-11	FASTENER,TAPE,HOOK MAKE FROM FASTENER,TAPE,HOOK P/N 20197272, 19.5 INCHES PART OF KIT P/N 57K0137. UOC:AVY,A13,A14,BVY,HVY,H13,H14,H21, H28,NNN	4

(1) ITEM NO	(2) SMR CODE	(3) NSN	(4) CAGEC	(5) PART NUMBER	(6) DESCRIPTION AND USABLE ON CODES(UOC)	(7) QTY
12	PAOZZ	5310009523567	03481	A31-125	NUT,PLAIN,BLIND RIV 5/16-18 PART OF KIT P/N 57K0137..... UOC:AVY,A13,A14,BVY,HVY,H13,H14,H21, H28,NNN	4
13	PAOZZ	9330011975458	19207	12340697	PLASTIC MATERIA,CE PART OF KIT P/N 57K0137..... UOC:AVY,A13,A14,BVY,HVY,H13,H14,H21, H28,NNN	1
14	PAOZZ	5310000145850	96906	MS27183-42	WASHER,FLAT #10 PART OF KIT P/N 57K0137..... UOC:AVY,A13,A14,BVY,HVY,H13,H14,H21, H28,NNN	4
15	PAOZZ	5310011870678	7X677	116000	NUT,PLAIN,HEXAGON #10-24 PART OF KIT P/N 57K0137..... UOC:AVY,A13,A14,A25,A26,A27,BVY,B15, B16,B17,B18,B20,NNN	4
16	MOOZZ		19207	12340700-6	FASTENER,TAPE,HOOK R.H.,MAKE FROM FASTENER,TAPE,HOOK,P/N 20197272, 6.38 IN PART OF KIT P/N 57K0137..... UOC:AVY,A13,A14,BVY,HVY,H13,H14,H21, H28,NNN	1
16	MOOZZ		19207	12340700-4	FASTENER,TAPE,HOOK L.H.,MAKE FROM FASTENER,TAPE,HOOK P/N 20197272, 5.31 IN PART OF KIT P/N 57K0137..... UOC:AVY,A13,A14,BVY,HVY,H13,H14,H21, H28,NNN	1
17	MOOZZ		19207	12340700-1	FASTENER,TAPE,HOOK MAKE FROM FASTENER,TAPE,HOOK P/N 20197272, 1.88 INCHES PART OF KIT P/N 57K0137. UOC:AVY,A13,A14,BVY,HVY,H13,H14,H21, H28,NNN	2
18	MOOZZ		19207	12340700-2	FASTENER,TAPE,HOOK R.H.,MAKE FROM FASTENER,TAPE,HOOK P/N 20197272,3.12 PART OF KIT P/N 57K0137..... UOC:AVY,A13,A14,BVY,HVY,H13,H14,H21, H28,NNN	1
18	MOOZZ		19207	12340700-3	FASTENER,TAPE,HOOK L.H.,MAKE FROM FASTENER,TAPE,HOOK P/N 20197272, 3.19 IN PART OF KIT P/N 57K0137..... UOC:AVY,A13,A14,BVY,HVY,H13,H14,H21, H28,NNN	1
19	MOOZZ		19207	12340700-9	FASTENER,TAPE,HOOK MAKE FROM FASTENER,TAPE,HOOK P/N 20197272,8.5 INCHES LONG PART OF KIT P/N 57K0137. UOC:AVY,A13,A14,BVY,HVY,H13,H14,H21, H28,NNN	2
20	PFOZZ	2540011975463	34623	5590630	BRACE,ARTIC CURTAI PART OF KIT P/N 57K0137..... UOC:AVY,A13,A14,BVY,HVY,H13,H14,H21, H28,NNN	1
21	MOOZZ		19207	12340700-8	.FASTENER,TAPE HOOK MAKE FROM FASTENER,TAPE,HOOK P/N 20197272,19 INCHES LONG.....	1

(1) ITEM NO	(2) SMR CODE	(3) NSN	(4) CAGEC	(5) PART NUMBER	(6) DESCRIPTION AND USABLE ON CODES(UOC)	(7) QTY
					UOC:AVY,A13,A14,BVY,HVY,H13,H14,H21, H28,NNN	
22	PAOZZ	5306002264828	80204	B1821BH031C113N	BOLT,MACHINE 5/16-18 X 1.125 PART OF KIT P/N 57K0137..... UOC:AVY,A13,A14,BVY,HVY,H13,H14,H21, H28,NNN	3
23	PAOZZ	5310012085252	34623	5590556	NUT,SELF-LOCKING,HE 5/16-18 PART OF KIT P/N 57K0137..... UOC:AVY,A13,A14,BVY,HVY,H13,H14,H21, H28,NNN	3
24	MOOZZ		19207	12340700-11	TAPE,FASTENER HOOK MAKE FROM FASTENER,TAPE,HOOK P/N 20197272 PART OF KIT P/N 57K0137..... UOC:AVY,A13,A14,BVY,HVY,H13,H14,H21, H28,NNN	2

END OF FIGURE

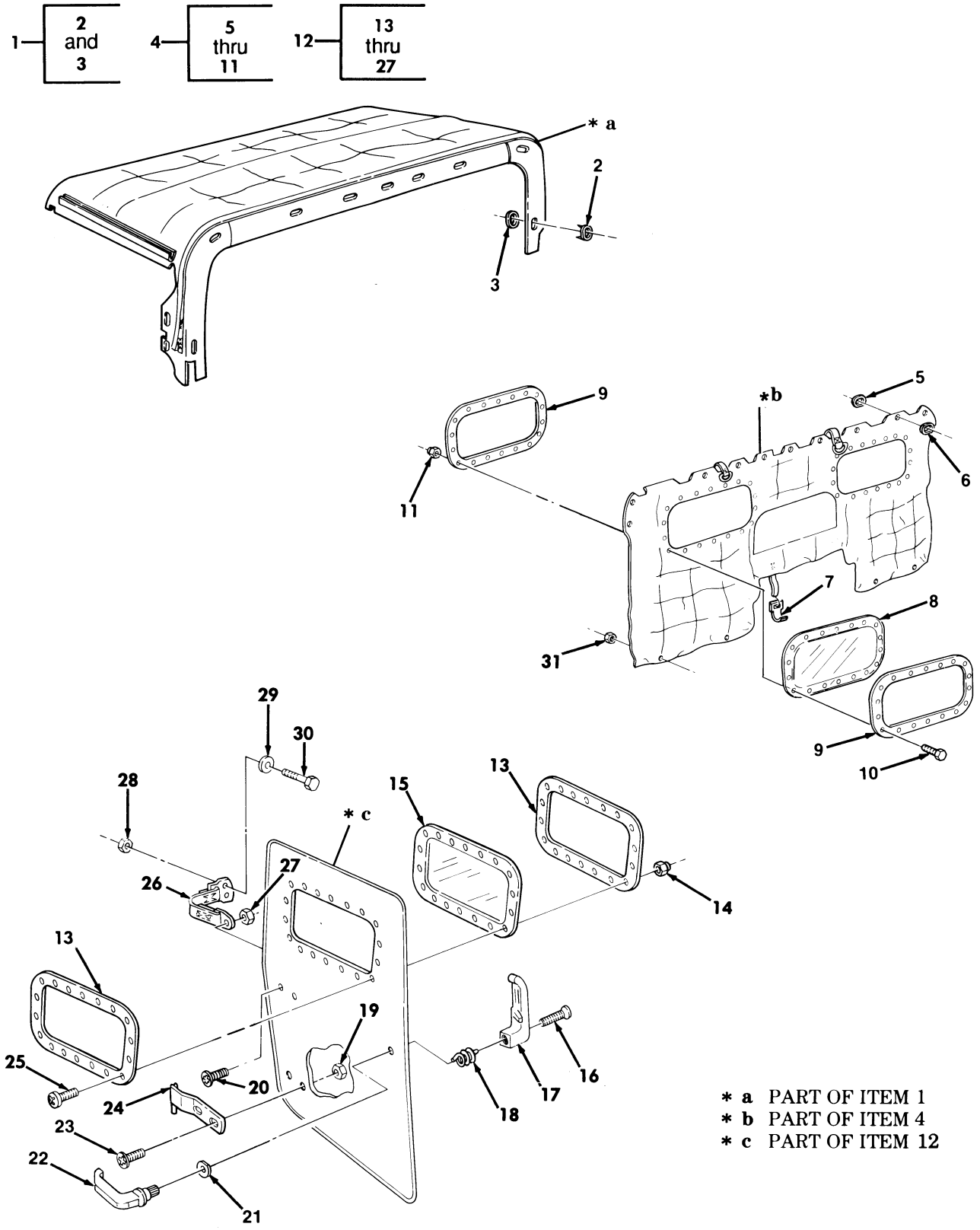

Figure 375. Arctic Kit, Two Man Crew, Top Curtain, Rear Curtain, and Door Assemblies.

(1) ITEM NO	(2) SMR CODE	(3) NSN	(4) CAGEC	(5) PART NUMBER	(6) DESCRIPTION AND USABLE ON CODES(UOC)	(7) QTY
					GROUP 3303 WINTERIZATION KITS	
					FIG. 375 ARCTIC KIT,TWO MAN CREW, TOP CURTAIN,REAR CURTAIN,AND DOOR ASSEMBLIES	
1	PAOFF	2540013958785	34623	12342441	COVER,FITTED,VEHICU PART OF KIT P/N 57K0137..... UOC:AVY,A13,A14,BVY,HVY,H13,H14,H21, H28,NNN	1
2	PAFZZ	5325006049662	21450	426686	.CLINCH PLATE,TURNBU..... UOC:AVY,A13,A14,BVY,HVY,H13,H14,H21, H28,NNN	8
3	PAFZZ	5325002818643	21450	426687	.SOCKET,TURNBUTTON F..... UOC:AVY,NNN	8
4	PAOFF	2540011975528	19207	12342442	CURTAIN,VEHICULAR PART OF KIT P/N 57K0137..... UOC:AVY,A13,A14,BVY,HVY,H13,H14,H21, H28,NNN	1
5	PAFZZ	5325006049662	21450	426686	.CLINCH PLATE,TURNBU..... UOC:AVY,A13,A14,BVY,HVY,H13,H14,H21, H28,NNN	12
6	PAFZZ	5325002818643	21450	426687	.SOCKET,TURNBUTTON F..... UOC:AVY,A13,A14,BVY,HVY,H13,H14,H21, H28,NNN	12
7	PAFZZ	5340012036542	31272	44702-10	.BUCKLE..... UOC:AVY,A13,A14,BVY,HVY,H13,H14,H21, H28,NNN	2
8	XBOZZ		19207	12340604	.WINDOW,VEHICULAR..... UOC:AVY,A13,A14,BVY,HVY,H13,H14,H21, H28,NNN	2
9	PFOZZ	5340011980686	19207	12340710	.PLATE,RETAINING,WIN..... UOC:AVY,A13,A14,BVY,HVY,H13,H14,H21, H28,NNN	4
10	PAOZZ	5305008132785	80205	NAS601-12P	.SCREW,MACHINE #8-32 X 3/4..... UOC:AVY,A13,A14,BVY,HVY,H13,H14,H21, H28,NNN	36
11	PAOZZ	5310010389579	24617	454748	.NUT,SELF-LOCKING,HE #8-32..... UOC:AVY,A13,A14,BVY,HVY,H13,H14,H21, H28,NNN	36
12	PAOOO	2510011975546	34623	SF5581723	DOOR,VEHICULAR FRONT,L.H. PART OF KIT P/N 57K0137..... UOC:AVY,A13,A14,BVY,HVY,H13,H14,H21, H28,NNN	1
12	PAOOO	2510011975547	34623	SF5581724	DOOR,VEHICULAR FRONT,R.H. PART OF KIT P/N 57K0137..... UOC:AVY,A13,A14,BVY,HVY,H13,H14,H21, H28,NNN	1
13	PFOZZ	5340011980686	19207	12340710	.PLATE,RETAINING,WIN..... UOC:AVY,A13,A14,BVY,HVY,H13,H14,H21, H28,NNN	2
14	PAOZZ	5310010389579	24617	454748	.NUT,SELF-LOCKING,HE #8-32..... UOC:AVY,A13,A14,BVY,HVY,H13,H14,H21,	18

(1) ITEM NO	(2) SMR CODE	(3) NSN	(4) CAGEC	(5) PART NUMBER	(6) DESCRIPTION AND USABLE ON CODES(UOC)	(7) QTY
					H28,NNN	
15	PFOZZ	2510013258741	19207	12340608	.WINDOW,VEHICULAR..... UOC:AVY,A13,A14,BVY,HVY,H13,H14,H21, H28,NNN	1
16	PAOZZ	5310000711327	96906	MS51960-70	.SCREW,MACHINE #10-32 X 1/4..... UOC:AVY,A13,A14,BVY,HVY,H13,H14,H21, H28,NNN	1
17	PAOZZ	2540012037721	19207	12301363-2	.HANDLE,DOOR,VEHICUL INSIDE,R.H. PART OF KIT P/N 5705619..... UOC:AVY,A13,A14,BVY,HVY,H13,H14,H21, H28,NNN	1
17	PAOZZ	2540012001994	19207	12301363-1	.HANDLE,DOOR,VEHICUL INSIDE,L.H. PART OF KIT P/N 5705618..... UOC:AVY,A13,A14,BVY,HVY,H13,H14,H21, H28,NNN	1
18	PAOZZ	5360013157212	19207	12356764-1	.SPRING,HELICAL,TORS L.H. PART OF KIT P/N 5705619..... UOC:AVY,A13,A14,BVY,HVY,H13,H14,H21, H28,NNN	1
18	PAOZZ	5360013157211	19207	12356764-2	.SPRING,HELICAL,TORS R.H. PART OF KIT P/N 5705618 PART OF KIT P/N 5705619..... UOC:AVY,A13,A14,BVY,HVY,H13,H14,H21, H28,NNN	1
19	PAOZZ	5310009971888	96906	MS35649-2252	.NUT,PLAIN,HEXAGON 1/4-20..... UOC:AVY,A13,A14,BVY,HVY,H13,H14,H21, H28,NNN	3
20	PAOZZ	5305012067217	16941	PL25D040P8	.SCREW,CAP,SOCKET HE 1/4-20 X 3/4.. UOC:AVY,A13,A14,BVY,HVY,H13,H14,H21, H28,NNN	1
21	PAOZZ	5310012059056	34623	5581321	.WASHER,FLAT PART OF KIT P/N 5705618 PART OF KIT P/N 5705619.... UOC:AVY,A13,A14,BVY,HVY,H13,H14,H21, H28,NNN	1
22	PAOZZ	2540012001995	19207	12301365	.HANDLE,DOOR,VEHICUL OUTSIDE,L.H., R.H. PART OF KIT P/N 5705618 PART OF KIT P/N 5705619..... UOC:AVY,A13,A14,BVY,HVY,H13,H14,H21, H28,NNN	1
23	PAOZZ	5305000711315	96906	MS51957-79	.SCREW,MACHINE 1/4-20 X 1/2..... UOC:AVY,A13,A14,BVY,HVY,H13,H14,H21, H28,NNN	3
24	PAOZZ	5340012059021	19207	12340193-1	.LEAF,BUTT HINGE L.H..... UOC:AVY,A13,A14,BVY,HVY,H13,H14,H21, H28,NNN	2
24	PAOZZ	5340012059022	19207	12340193-2	.LEAF,BUTT HINGE R.H..... UOC:AVY,A13,A14,BVY,HVY,H13,H14,H21, H28,NNN	2
25	PAOZZ	5305008132785	80205	NAS601-12P	.SCREW,MACHINE #8-32 X 3/4..... UOC:AVY,A13,A14,BVY,HVY,H13,H14,H21, H28,NNN	18
26	PAOZZ	5340011993510	31272	44877	.STRAP,WEBBING..... UOC:AVY,A13,A14,BVY,HVY,H13,H14,H21,	1

(1) ITEM NO	(2) SMR CODE	(3) NSN	(4) CAGEC	(5) PART NUMBER	(6) DESCRIPTION AND USABLE ON CODES(UOC)	(7) QTY
					H28,NNN	
27	PAOZZ	5310009971888	96906	MS35649-2252	.NUT,PLAIN,HEXAGON 1/4-20..... UOC:AVY,A13,A14,BVY,HVY,H13,H14,H21, H28,NNN	1
28	PAOZZ	5310000614650	96906	MS51943-31	NUT,SELF-LOCKING,HE 1/4-20 PART OF KIT P/N 57K0137..... UOC:AVY,A13,A14,BVY,HVY,H13,H14,H21, H28,NNN	2
29	PAOZZ	5310008094058	96906	MS27183-10	WASHER,FLAT 1/4..... UOC:AVY,A13,A14,BVY,HVY,H13,H14,H21, H28,NNN	2
30	PAOZZ	5305000712506	80204	B1821BH025C050N	SCREW,CAP,HEXAGON H 1/4-20 X 1/2... UOC:AVY,A13,A14,BVY,HVY,H13,H14,H21, H28,NNN	2
31	PAOZZ	5310008140673	96906	MS51943-33	NUT,SELF-LOCKING,HE 5/16-18 PART OF KIT P/N 57K0137..... UOC:AVY,A13,A14,BVY,HVY,H13,H14,H21, H28,NNN	4
KIT	PDFZZ	2540013944454	19207	57K0137	WINTERIZATION KIT,V..... UOC:AVY,A13,A14,BVY,HVY,H13,H18,H21, H28,NNN	1
					BOLT,MACHINE (4) 373-11	
					BOLT,MACHINE (4) 374-7	
					BOLT,MACHINE (3) 374-22	
					BOW,VEHICULAR TOP (1) 373-1	
					BRACE,ARCTIC CURTAI(1) 374-20	
					BRACKET,DOUBLE ANGL(1) 374-4	
					BUCKLE (2) 373-10	
					COVER,FITTED,VEHICU(1) 375-1	
					CURTAIN,VEHICULAR (1) 375-4	
					DOOR,VEHICULAR (1) 375-12	
					DOOR,VEHICULAR (1) 375-12	
					FASTENER,TAPE HOOK (2) 374-9	
					FASTENER,TAPE HOOK (2) 374-10	
					FASTENER,TAPE HOOK (4) 374-11	
					FASTENER,TAPE HOOK (1) 374-16	
					FASTENER,TAPE HOOK (1) 374-16	
					FASTENER,TAPE HOOK (2) 374-17	
					FASTENER,TAPE HOOK (1) 374-18	
					FASTENER,TAPE HOOK (1) 374-18	
					FASTENER,TAPE HOOK (2) 374-19	
					FASTENER,TAPE HOOK (2) 374-24	
					INSULATION,FOAM (2) 374-1	
					LOOP,STRAP FASTENER(2) 374-3	
					NUT,PLAIN,BLIND RIV(4) 374-12	
					NUT,PLAIN,HEXAGON (4) 374-15	
					NUT,SELF-LOCKING,HE(4) 373-8	
					NUT,SELF-LOCKING,HE(3) 374-23	
					NUT,SELF-LOCKING,HE(2) 375-28	
					NUT,SELF-LOCKING,HE(4) 375-31	
					PLASTIC,MATERIAL,CE(1) 374-13	
					RAIL ASSEMBLY,HAND (1) 373-5	
					RAIL ASSEMBLY,HAND (1) 373-5	

(1) ITEM NO	(2) SMR CODE	(3) NSN	(4) CAGEC	(5) PART NUMBER	(6) DESCRIPTION AND USABLE ON CODES(UOC)	(7) QTY
					RIVET,BLIND (6) 373-7	
					SCREW,MACHINE (4) 373-3	
					SCREW,MACHINE (2) 373-4	
					SCREW,MACHINE (4) 374-2	
					STRAP,RETAINING (4) 373-2	
					STUD,TURNBUTTON FAS(3) 373-6	
					WASHER,FLAT (10) 374-8	
					WASHER,FLAT (4) 374-14	
					WASHER,LOCK (8) 373-9	

END OF FIGURE

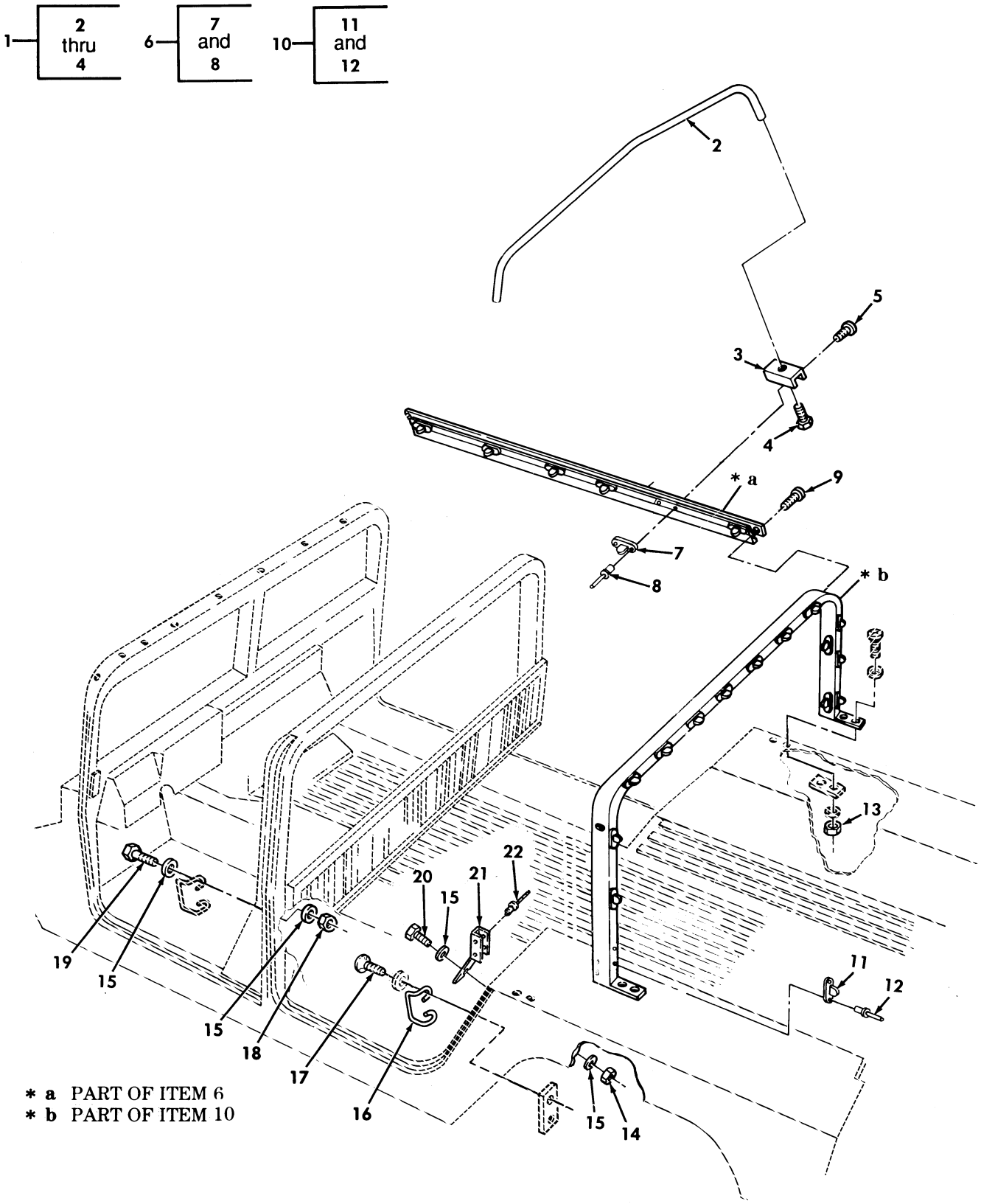

Figure 376. Arctic Kit, Four Man Crew, Top Enclosure, Bows, and Mounting Components.

(1) ITEM NO	(2) SMR CODE	(3) NSN	(4) CAGEC	(5) PART NUMBER	(6) DESCRIPTION AND USABLE ON CODES(UOC)	(7) QTY
					GROUP 3303 WINTERIZATION KITS	
					FIG. 376 ARCTIC KIT,FOUR MAN CREW, TOP ENCLOSURE,BOWS,AND MOUNTING COMPONENTS	
1	PFOZZ	2540011996759	19207	12340682	BOW,VEHICULAR TOP PART OF KIT P/N 5705692..... UOC:AVY,A13,A14,BVY,HVY,H13,H14,NNN	2
2	XAOZZ		19207	12340713	.BOW,VEHICULAR TOP..... UOC:AVY,A13,A14,BVY,HVY,H13,H14,NNN	1
3	PFOZZ	5340012043862	19207	12340239	.STRAP,RETAINING..... UOC:AVY,A13,A14,BVY,HVY,H13,H14,NNN	2
4	PAOZZ	5305000711313	96906	MS51957-77	.SCREW,MACHINE 1/4-20 X 3/8..... UOC:AVY,A13,A14,BVY,HVY,H13,H14,NNN	2
5	PAOZZ	5305000593659	96906	MS51958-63	SCREW,MACHINE #10-32 X 1/2 PART OF KIT P/N 5705692..... UOC:AVY,A13,A14,BVY,HVY,H13,H14,NNN	8
6	PFOZZ	2590011961290	19207	12340222-1	HANDRAIL,VEHICULAR L.H. PART OF KIT P/N 5705692..... UOC:AVY,A13,A14,BVY,HVY,H13,H14,NNN	1
6	PFOZZ	2590011965314	19207	12340222-2	HANDRAIL,VEHICULAR R.H. PART OF KIT P/N 5705692..... UOC:AVY,A13,A14,BVY,HVY,H13,H14,NNN	1
7	PAOZZ	5325008235999	13940	XB78323-05001	.STUD,TURNBUTTON FAS..... UOC:AVY,A13,A14,BVY,HVY,H13,H14,NNN	6
8	PAOZZ	5320000835009	81349	M24243/1-A403	.RIVET,BLIND 1/8 DIA,.126-.187 GRIP UOC:AVY,A13,A14,BVY,HVY,H13,H14,NNN	12
9	PAOZZ	5305011173396	80205	NAS-1635-3LE12	SCREW,CAP,SOCKET HE #10-32 X 1/2 PART OF KIT P/N 5705692..... UOC:AVY,A13,A14,BVY,HVY,H13,H14,NNN	2
10	PFOZZ	2540011961291	19207	12340679	BOW,VEHICULAR TOP PART OF KIT P/N 5705692..... UOC:AVY,A13,A14,BVY,HVY,H13,H14,NNN	1
11	PAOZZ	5325008235999	13940	XB78323-05001	.STUD,TURNBUTTON FAS..... UOC:AVY,A13,A14,BVY,HVY,H13,H14,NNN	17
12	PAOZZ	5320000835009	81349	M24243/1-A403	.RIVET,BLIND 1/8 DIA,.126-.187 GRIP UOC:AVY,A13,A14,BVY,HVY,H13,H14,NNN	34
13	PAOZZ	5310000614650	96906	MS51943-31	NUT,SELF-LOCKING,HE 1/4-20 PART OF KIT P/N 5705692..... UOC:AVY,A13,A14,BVY,HVY,H13,H14,NNN	4
14	PAOZZ	5310004838791	96906	MS17829-4F	NUT,SELF-LOCKING,HE #10-32 PART OF KIT P/N 5705692..... UOC:AVY,A13,A14,BVY,HVY,H13,H14,NNN	2
15	PAOZZ	5310000814219	96906	MS27183-12	WASHER,FLAT 5/16 PART OF KIT P/N 5705692..... UOC:AVY,A13,A14,BVY,HVY,H13,H14,NNN	12
16	PAOZZ	5340012087670	19207	12340182-1	STRIKE,CATCH REAR DOOR,L.H. PART OF KIT P/N 5705692..... UOC:AVY,A13,A14,BVY,HVY,H13,H14,NNN	1
16	PAOZZ	5342012049610	34623	5581364	STRIKER,LATCH,DOOR REAR DOOR,R.H. PART OF KIT P/N 5705692..... UOC:AVY,A13,A14,BVY,HVY,H13,H14,NNN	1

(1) ITEM NO	(2) SMR CODE	(3) NSN	(4) CAGEC	(5) PART NUMBER	(6) DESCRIPTION AND USABLE ON CODES(UOC)	(7) QTY
17	PAOZZ	5305009881727	96906	MS35206-283	SCREW,MACHINE 1/4-20 X 3/4 PART OF KIT P/N 5705692..... UOC:AVY,A13,A14,BVY,HVY,H13,H14,NNN	4
18	PAOZZ	5310002416658	96906	MS51943-34	NUT,SELF-LOCKING,HE 5/16-24 PART OF KIT P/N 5705692..... UOC:AVY,A13,A14,BVY,HVY,H13,H14,NNN	4
19	PAOZZ	5306001822027	88044	AN5H10A	BOLT,MACHINE PART OF KIT P/N 5705692 UOC:AVY,A13,A14,BVY,HVY,H13,H14,NNN	4
20	PAOZZ	5305009932457	96906	MS35207-284	SCREW,MACHINE 1/4-28 X 1-1/4 PART OF KIT P/N 5705692..... UOC:AVY,A13,A14,BVY,HVY,H13,H14,NNN	2
21	PAOZA	5340014309239	19207	12447124-1	BRACKET,MOUNTING C-PILLAR,RH PART OF KIT P/N 5705692..... UOC:AVY,A13,A14,BVY,HVY,H13,H14,NNN	1
21	PAOZA	5340014309240	19207	12447123-1	BRACKET,MOUNTING C-PILLAR,LH PART OF KIT P/N 5705692..... UOC:AVY,A13,A14,BVY,HVY,H13,H14,NNN	1
22	PAOZZ	5320010341884	11815	CR3243-6-5	RIVET,BLIND PART OF KIT P/N 5705692. UOC:AVY,A13,A14,BVY,HVY,H13,H14,NNN	8

END OF FIGURE

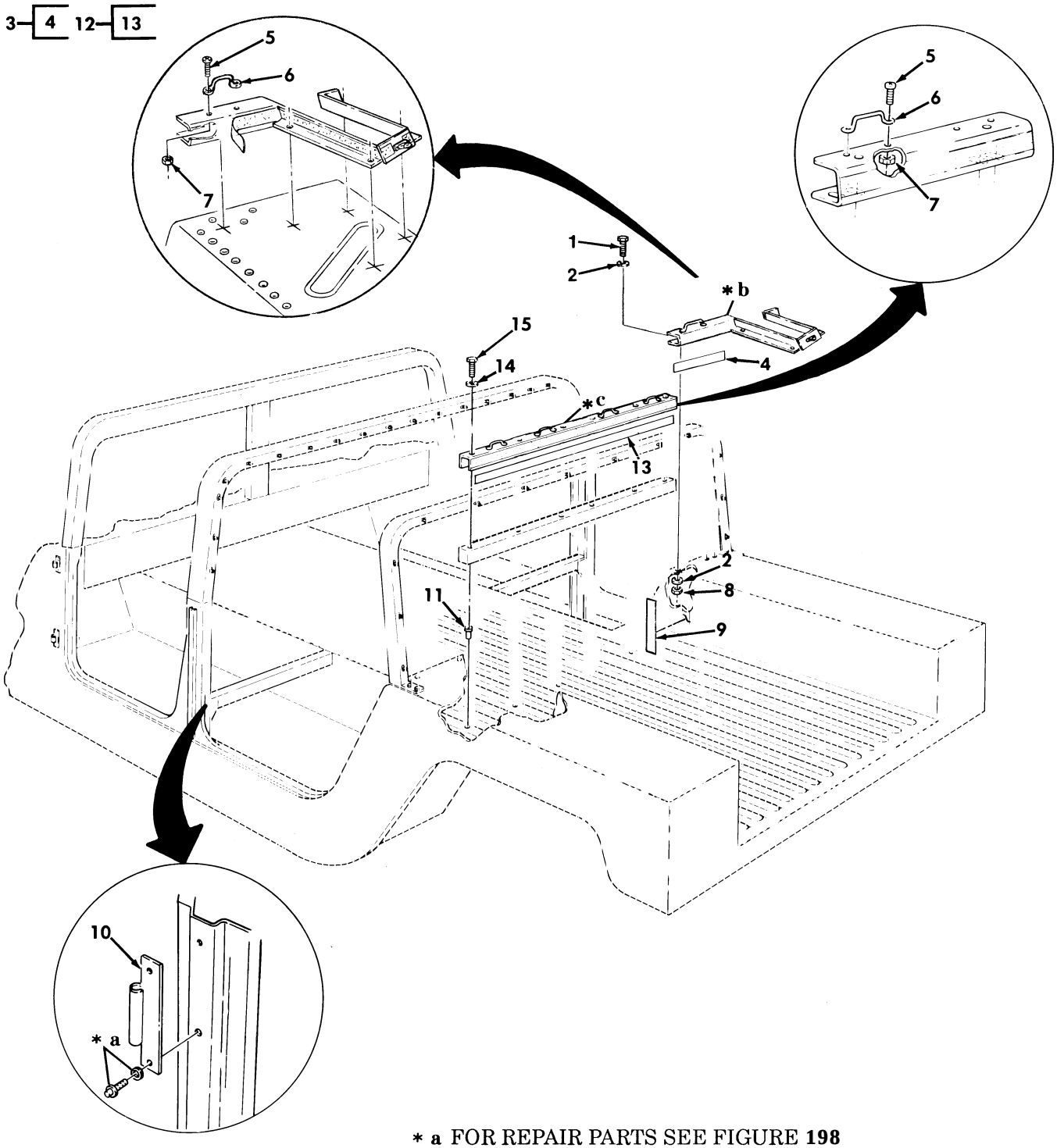

* a FOR REPAIR PARTS SEE FIGURE **198**
* b PART OF ITEM 3
* c PART OF ITEM 11

Figure 377. Arctic Kit, Door Hinges, and Curtain Channels.

(1) ITEM NO	(2) SMR CODE	(3) NSN	(4) CAGEC	(5) PART NUMBER	(6) DESCRIPTION AND USABLE ON CODES(UOC)	(7) QTY
					GROUP 3303 WINTERIZATION KITS	
					FIG. 377 ARCTIC KIT,DOOR HINGES,AND CURTAIN CHANNELS	
1	PAOZZ	5305000680502	96906	MS90725-6	SCREW,CAP,HEXAGON H 1/4-20 X 3/4 PART OF KIT P/N 5705692..... UOC:AVY,A13,A14,BVY,HVY,H13,H14,NNN	10
2	PAOZZ	5310011992293	7X677	9421394	WASHER,FLAT 1/4 PART OF KIT P/N 5705692..... UOC:AVY,A13,A14,BVY,HVY,H13,H14,NNN	20
3	PAOZZ	5340013968322	19207	12342496	BRACKET,MOUNTING R.H. PART OF KIT P/N 5705692..... UOC:AVY,A13,A14,BVY,HVY,H13,H14,NNN	1
3	PAOZZ	5340013850057	19207	12342495	BRACKET,MOUNTING L.H. PART OF KIT P/N 5705692..... UOC:AVY,A13,A14,BVY,HVY,H13,H14,NNN	1
4	MOOZZ		19207	12340700-14	.TAPE,FASTENER MAKE FROM FASTENER, TAPE,HOOK P/N 20197272,14 INCHES LONG..... UOC:AVY,A13,A14,BVY,HVY,H13,H14,NNN	2
5	PAOZZ	5305009847341	96906	MS35191-273	SCREW,MACHINE #10-32 X 5/8 PART OF KIT P/N 5705692..... UOC:AVY,A13,A14,BVY,HVY,H13,H14,NNN	12
6	PAOZZ	5340011978673	19207	12338839-4	HANDLE,BOW PART OF KIT P/N 5705692.. UOC:AVY,A13,A14,BVY,HVY,H13,H14,NNN	6
7	PAOZZ	5310001641790	72582	454749	NUT,SELF-LOCKING,HE #10-32 PART OF KIT P/N 5705692..... UOC:AVY,A13,A14,BVY,HVY,H13,H14,NNN	12
8	PAOZZ	5310014326727	24617	9419471	NUT,SELF-LOCKING,HE 1/4-20 PART OF KIT P/N 5705692..... UOC:AVY,A13,A14,BVY,HVY,H13,H14,NNN	10
9	MOOZZ		19207	12340700-16	TAPE,FASTENER HOOK MAKE FROM FASTENER,TAPE,HOOK P/N 20197272,16 INCHES LONG PART OF KIT P/N 5705692. UOC:AVY,A13,A14,BVY,HVY,H13,H14,NNN	2
10	PAOZZ	5342012032822	19207	12338650	MOUNT,RESILIENT PART OF KIT P/N 5705692..... UOC:AVY,A13,A14,BVY,HVY,H13,H14,NNN	4
11	PAOZZ	5310010851208	96906	MS27130-S71	NUT,PLAIN,BLIND RIV .030-.125 PART OF KIT P/N 5705692..... UOC:AVY,A13,A14,BVY,HVY,H13,H14,NNN	6
12	PAOZZ	2590013332999	80212	12342152	BEZEL,AUTOMOTIVE TR PART OF KIT P/N 5705692..... UOC:AVY,A13,A14,BVY,HVY,H13,H14,NNN	1
13	MOOZZ		19207	12340700-15	.TAPE,FASTENER MAKE FROM FASTENER, TAPE,HOOK P/N 20197272,15 INCHES LONG..... UOC:AVY,A13,A14,BVY,HVY,H13,H14,NNN	1
14	PAOZZ	5310000814219	96906	MS27183-12	WASHER,FLAT 11/32 PART OF KIT P/N 5705692..... UOC:AVY,A13,A14,BVY,HVY,H13,H14,NNN	6
15	PAOZZ	5306002264833	80204	B1821BH031C200N	BOLT,MACHINE 5/16-18 X 2.00 PART OF	6

(1) ITEM NO	(2) SMR CODE	(3) NSN	(4) CAGEC	(5) PART NUMBER	(6) DESCRIPTION AND USABLE ON CODES(UOC)	(7) QTY
					KIT P/N 5705692.....	
					UOC:AVY,A13,A14,BVY,HVY,H13,H14,NNN	

END OF FIGURE

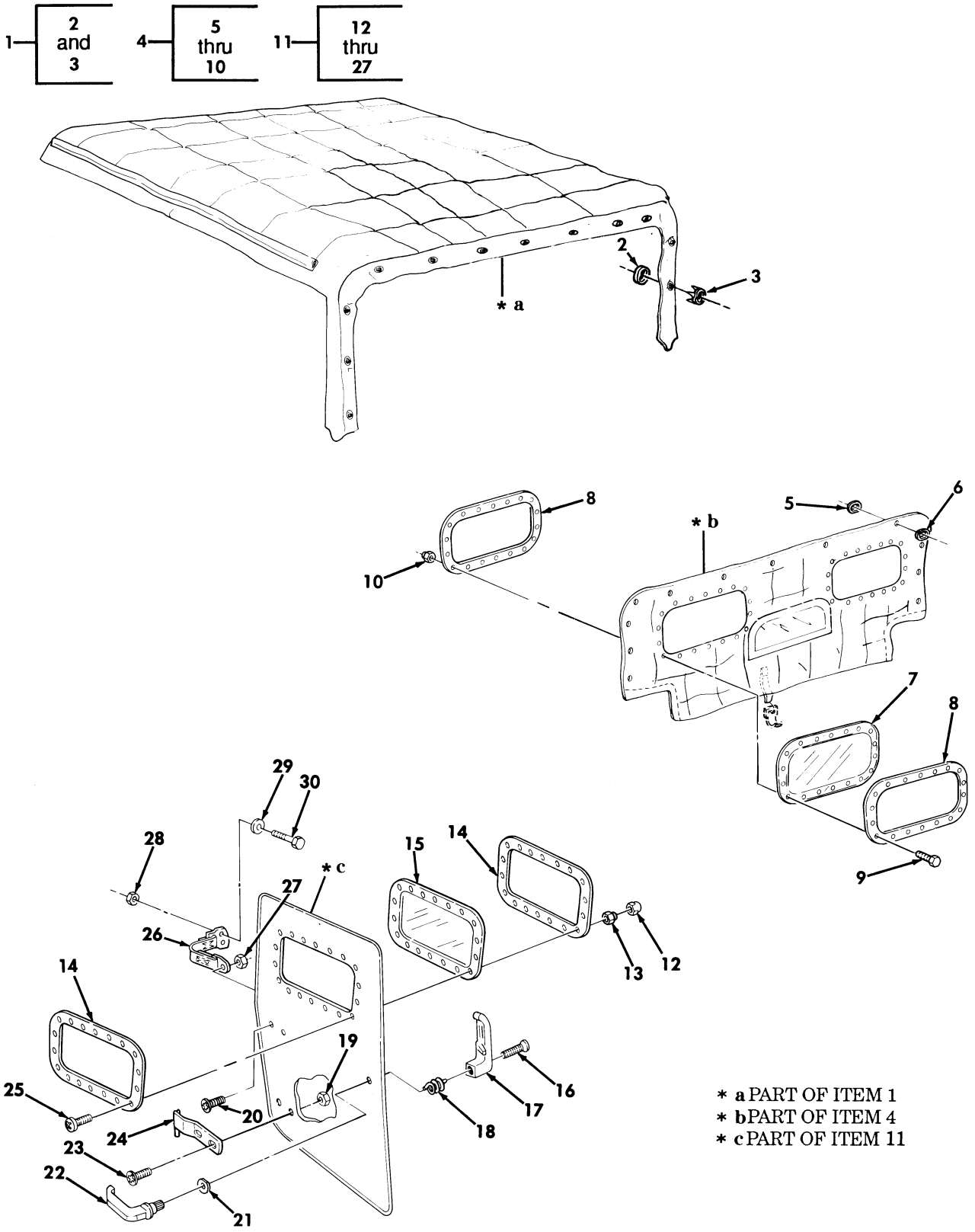

Figure 378. Arctic Kit, Four Man Crew, Top Curtain, Rear Curtain, and Door Assemblies.

(1) ITEM NO	(2) SMR CODE	(3) NSN	(4) CAGEC	(5) PART NUMBER	(6) DESCRIPTION AND USABLE ON CODES(UOC)	(7) QTY
					GROUP 3303 WINTERIZATION KITS	
					FIG. 378 ARCTIC KIT,FOUR MAN CREW, TOP CURTAIN,REAR CURTAIN,AND DOOR ASSEMBLIES	
1	PAOFF	2540013298649	19207	12342153-1	COVER,FITTED,VEHICU PART OF KIT P/N 5705692..... UOC:AVY,A13,A14,BVY,HVY,H13,H14,NNN	1
2	PAFZZ	5325006049662	21450	426686	.CLINCH PLATE,TURNBU..... UOC:AVY,A13,A14,BVY,HVY,H13,H14,NNN	31
3	PAFZZ	5325002818643	21450	426687	.SOCKET,TURNBUTTON F..... UOC:AVY,A13,A14,BVY,HVY,H13,H14,NNN	31
4	PAOFF	2540013360791	19207	12342153-2	CURTAIN,VEHICULAR PART OF KIT P/N 5705692..... UOC:AVY,A13,A14,BVY,HVY,H13,H14,NNN	1
5	PAFZZ	5325006049662	21450	426686	.CLINCH PLATE,TURNBU..... UOC:AVY,A13,A14,BVY,HVY,H13,H14,NNN	13
6	PAFZZ	5325002818643	21450	426687	.SOCKET,TURNBUTTON F..... UOC:AVY,A13,A14,BVY,HVY,H13,H14,NNN	13
7	XBFZZ		19207	12340604	.WINDOW,VEHICULAR..... UOC:AVY,A13,A14,BVY,HVY,H13,H14,NNN	2
8	PFOZZ	5340011980686	19207	12340710	.PLATE,RETAINING,WIN..... UOC:AVY,A13,A14,BVY,HVY,H13,H14,NNN	4
9	PAOZZ	5305009846195	96906	MS35206-247	.SCREW,MACHINE #8-32 X 3/4..... UOC:AVY,A13,A14,BVY,HVY,H13,H14,NNN	36
10	PAOZZ	5310009416019	96906	MS21083N08	.NUT,SELF-LOCKING,HE #8-32..... UOC:AVY,A13,A14,BVY,HVY,H13,H14,NNN	36
11	PAOOO	2510011975547	34623	SF5581724	DOOR,VEHICULAR FRONT,R.H. PART OF KIT P/N 5705692..... UOC:AVY,A13,A14,BVY,HVY,H13,H14,NNN	1
11	PAOOO	2510011975546	34623	SF5581723	DOOR,VEHICULAR FRONT,L.H. PART OF KIT P/N 5705692..... UOC:AVY,A13,A14,BVY,HVY,H13,H14,NNN	1
11	PAOOO	2510013302249	19207	12342157	DOOR,VEHICULAR REAR,L.H. PART OF KIT P/N 5705692..... UOC:AVY,A13,A14,BVY,HVY,H13,H14,NNN	1
11	PAOOO	2510013302250	19207	12342155	DOOR,VEHICULAR REAR,R.H. PART OF KIT P/N 5705692..... UOC:AVY,A13,A14,BVY,HVY,H13,H14,NNN	1
12	PAOZZ	5340010263250	81349	M5501/7-F2	.CAP-PLUG,PROTECTIVE..... UOC:AVY,A13,A14,BVY,HVY,H13,H14,NNN	18
13	PAOZZ	5310009416019	96906	MS21083N08	.NUT,SELF-LOCKING,HE #8-32..... UOC:AVY,A13,A14,BVY,HVY,H13,H14,NNN	18
14	PFOZZ	5340011980686	19207	12340710	.PLATE,RETAINING,WIN..... UOC:AVY,A13,A14,BVY,HVY,H13,H14,NNN	2
15	XBOZZ		19207	12340605	.WINDOW,VEHICULAR..... UOC:AVY,A13,A14,BVY,HVY,H13,H14,NNN	1
16	PAOZZ	5305000711327	96906	MS51960-70	.SCREW,MACHINE #10-32 X 1/4 PART OF KIT P/N 5705618 PART OF KIT P/N 5705619..... UOC:AVY,A13,A14,BVY,HVY,H13,H14,NNN	1
17	PAOZZ	2540012037721	19207	12301363-2	.HANDLE,DOOR,VEHICUL L.H. PART OF	1

(1) ITEM NO	(2) SMR CODE	(3) NSN	(4) CAGEC	(5) PART NUMBER	(6) DESCRIPTION AND USABLE ON CODES(UOC)	(7) QTY
					KIT P/N 5705619.....	
					UOC:AVY,A13,A14,BVY,HVY,H13,H14,NNN	
17	PAOZZ	2540012001994	19207	12301363-1	.HANDLE,DOOR,VEHICUL R.H. PART OF	1
					KIT P/N 5705618.....	
					UOC:AVY,A13,A14,BVY,HVY,H13,H14,NNN	
18	PAOZZ	5360013157212	19207	12356764-1	.SPRING,HELICAL,TORS L.H. PART OF	1
					KIT P/N 5705619.....	
					UOC:AVY,A13,A14,BVY,HVY,H13,H14,NNN	
18	PAOZZ	5360013157211	19207	12356764-2	.SPRING,HELICAL,TORS R.H. PART OF	1
					KIT P/N 5705618.....	
					UOC:AVY,A13,A14,BVY,HVY,H13,H14,NNN	
19	PAOZZ	5310011520598	24617	271172	.NUT,SELF-LOCKING,AS.....	13
					UOC:AVY,A13,A14,BVY,HVY,H13,H14,NNN	
20	PAOZZ	5305009881725	96906	MS35206-281	.SCREW,MACHINE 1/4-20 X 3/4.....	1
					UOC:AVY,A13,A14,BVY,HVY,H13,H14,NNN	
21	PAOZZ	5310012059056	34623	5581321	.WASHER,FLAT 5/8 PART OF KIT P/N	1
					5705618 PART OF KIT P/N 5705619.....	
					UOC:AVY,A13,A14,BVY,HVY,H13,H14,NNN	
22	PAOZZ	2540012001995	19207	12301365	.HANDLE,DOOR,VEHICUL L.H.,R.H. PART	1
					OF KIT P/N 5705618 PART OF KIT P/N	
					5705619.....	
					UOC:AVY,A13,A14,BVY,HVY,H13,H14,NNN	
23	PAOZZ	5305000711315	96906	MS51957-79	.SCREW,MACHINE 1/4-20 X 1/2.....	3
					UOC:AVY,A13,A14,BVY,HVY,H13,H14,NNN	
24	PAOZZ	5340012059022	19207	12340193-2	.LEAF,BUTT HINGE FRONT AND REAR,	2
					L.H.....	
					UOC:AVY,A13,A14,BVY,HVY,H13,H14,NNN	
24	PAOZZ	5340012059021	19207	12340193-1	.LEAF,BUTT HINGE FRONT AND REAR,	2
					R.H.....	
					UOC:AVY,A13,A14,BVY,HVY,H13,H14,NNN	
25	PAOZZ	5305009846195	96906	MS35206-247	.SCREW,MACHINE #8-32 X 3/4.....	18
					UOC:AVY,A13,A14,BVY,HVY,H13,H14,NNN	
26	PAOZZ	5340012547189	19207	12340201	.LOOP,STRAP FASTENER.....	1
					UOC:AVY,A13,A14,BVY,HVY,H13,H14,NNN	
27	PAOZZ	5310009971888	96906	MS35649-2252	.NUT,PLAIN,HEXAGON 1/4-20.....	1
					UOC:AVY,A13,A14,BVY,HVY,H13,H14,NNN	
28	PAOZZ	5310002416658	96906	MS51943-34	NUT,SELF-LOCKING,HE 5/16-20 PART OF	2
					KIT P/N 5705692.....	
					UOC:AVY,A13,A14,BVY,HVY,H13,H14,NNN	
29	PAOZZ	5310000814219	96906	MS27183-12	WASHER,FLAT 11/32 PART OF KIT P/N	2
					5705692.....	
					UOC:AVY,A13,A14,BVY,HVY,H13,H14,NNN	
30	PAOZZ	5305000514076	80204	B1821BH031F100N	SCREW,CAP,HEXAGON H 5/16-24 X 1.00	2
					PART OF KIT P/N 5705692.....	
					UOC:AVY,A13,A14,BVY,HVY,H13,H14,NNN	
KIT	PDFZZ	2540011992390	19207	5705692	WINTERIZATION KIT,V.....	1
					UOC:A13,A14,HVY,H13,H14	
					BEZEL,AUTO (1) 377-12	
					BOLT,MACHINE (4) 376-19	
					BOLT,MACHINE (6) 377-15	
					BOW,VEHICULAR TOP (2) 376-1	
					BOW,VEHICULAR TOP (1) 376-10	
					BRACKET,MOUNTING (1) 376-21	

(1) ITEM NO	(2) SMR CODE	(3) NSN	(4) CAGEC	(5) PART NUMBER	(6) DESCRIPTION AND USABLE ON CODES(UOC)	(7) QTY
					BRACKET,MOUNTING (1) 376-21	
					BRACKET,MOUNTING (1) 377-3	
					BRACKET,MOUNTING (1) 377-3	
					COVER,FITTED,VEHICU(1) 378-1	
					CURTAIN,VEHICULAR (1) 378-4	
					DOOR,VEHICULAR (1) 378-11	
					DOOR,VEHICULAR (1) 378-11	
					DOOR,VEHICULAR (1) 378-11	
					DOOR,VEHICULAR (1) 378-11	
					FASTENER,TAPE,HOOK (2) 377-9	
					HANDLE,BOW (6) 377-6	
					HANDRAIL,VEHICULAR (1) 376-6	
					HANDRAIL,VEHICULAR (1) 376-6	
					MOUNT (4) 377-10	
					NUT,PLAIN,BLIND RIV(6) 377-11	
					NUT,SELF-LOCKING,HE(4) 376-13	
					NUT,SELF-LOCKING,HE(2) 376-14	
					NUT,SELF-LOCKING,HE(4) 376-18	
					NUT,SELF-LOCKING,HE(12) 377-7	
					NUT,SELF-LOCKING,HE(10) 377-8	
					NUT,SELF-LOCKING.HE(2) 378-28	
					RIVET,BLIND (8) 376-22	
					SCREW,CAP,HEXAGON H(10) 377-1	
					SCREW,CAP,HEXAGON H(2) 378-30	
					SCREW,CAP,SOCKET HE(2) 376-9	
					SCREW,MACHINE (8) 376-5	
					SCREW,MACHINE (4) 376-17	
					SCREW,MACHINE (2) 376-20	
					SCREW,MACHINE (12) 377-5	
					STRIKE,CATCH (1) 376-16	
					STRIKE,CATCH (1) 376-16	
					WASHER,FLAT (12) 376-15	
					WASHER,FLAT (20) 377-2	
					WASHER,FLAT (6) 377-14	
					WASHER,FLAT (2) 378-29	

END OF FIGURE

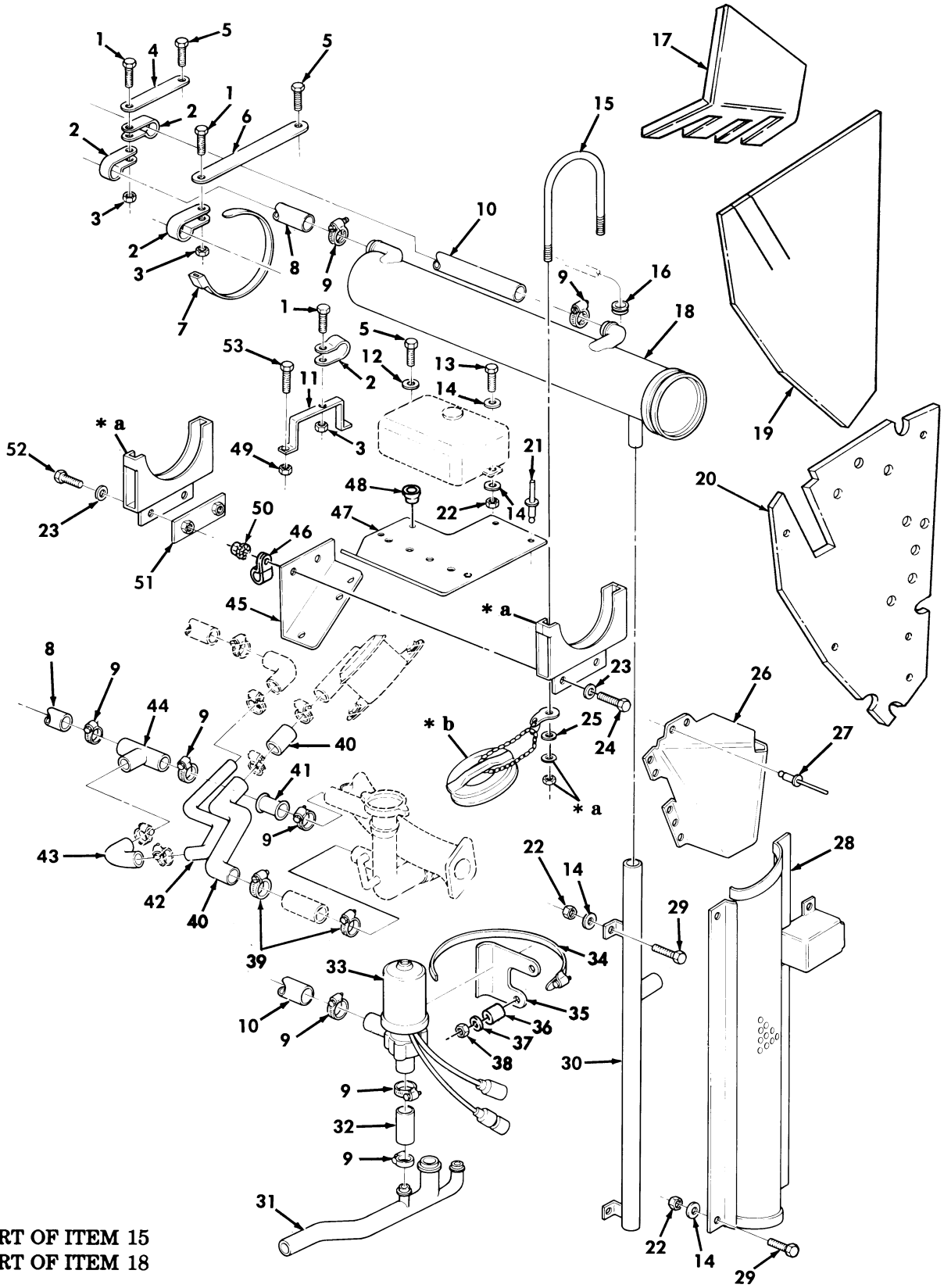

* a PART OF ITEM 15
* b PART OF ITEM 18

Figure 379. Swingfire Heater Kit and Related Parts.

(1) ITEM NO	(2) SMR CODE	(3) NSN	(4) CAGEC	(5) PART NUMBER	(6) DESCRIPTION AND USABLE ON CODES(UOC)	(7) QTY
					GROUP 3303 WINTERIZATION KITS	
					FIG. 379 SWINGFIRE HEATER KIT AND RELATED PARTS	
1	PAOZZ	5305009846194	96906	MS35206-246	SCREW,MACHINE #8-32 X 5/8 PART OF KIT P/N 5705615..... UOC:AVY,A11,A13,A14,A15,A20,A24,A25, A26,A27,B16,B17,B18,HVY,H11,H13,H14, H15,H16,H17,H18,H20,H21,H24,H25,H26, H27,H28,MMM	3
2	PAOZZ	5340009226300	96906	MS21333-77	CLAMP,LOOP PART OF KIT P/N 5705615.. UOC:AVY,A11,A13,A14,A15,A20,A24,A25, A26,A27,B16,B17,B18,HVY,H11,H13,H14, H15,H16,H17,H18,H20,H21,H24,H25,H26, H27,H28,MMM	4
3	PAOZZ	5310008113494	96906	MS21044-N08	NUT,SELF-LOCKING,HE #8-32 PART OF KIT P/N 5705615..... UOC:AVY,A11,A13,A14,A15,A20,A24,A25, A26,A27,B16,B17,B18,HVY,H11,H13,H14, H15,H16,H17,H18,H20,H21,H24,H25,H26, H27,H28,MMM	3
4	PAOZZ	5365013145544	19207	12368397-2	SPACER,PLATE PART OF KIT P/N 5705615 UOC:AVY,A11,A13,A14,A15,A20,A24,A25, A26,A27,B16,B17,B18,HVY,H11,H13,H14, H15,H16,H17,H18,H20,H21,H24,H25,H26, H27,H28,MMM	1
5	PAOZZ	5305007578287	96906	MS51851-43	SCREW,TAPPING #8-12 X 3/8 PART OF KIT P/N 5705615..... UOC:AVY,A11,A13,A14,A15,A20,A24,A25, A26,A27,B16,B17,B18,HVY,H11,H13,H14, H15,H16,H17,H18,H20,H21,H24,H25,H26, H27,H28,MMM	3
6	PAOZZ	5365013145544	19207	12368397-2	SPACER,PLATE PART OF KIT P/N 5705615 UOC:AVY,A11,A13,A14,A15,A20,A24,A25, A26,A27,B16,B17,B18,HVY,H11,H13,H14, H15,H16,H17,H18,H20,H21,H24,H25,H26, H27,H28,MMM	1
7	PAOZZ	5975005709598	96906	MS3367-7-9	STRAP,TIEDOWN,ELECT PART OF KIT P/N 5705615..... UOC:AVY,A11,A13,A14,A15,A20,A24,A25, A26,A27,B16,B17,B18,HVY,H11,H13,H14, H15,H16,H17,H18,H20,H21,H24,H25,H26, H27,H28,MMM	9
8	MOOZZ		96906	MS521301A203R 74	HOSE,NONMETALLIC MAKE FROM HOSE,P/N MS521301A203R,74 INCHES LONG PART OF KIT P/N 5705615..... UOC:AVY,A11,A13,A14,A15,A20,A24,A25, A26,A27,B16,B17,B18,HVY,H11,H13,H14, H15,H16,H17,H18,H20,H21,H24,H25,H26, H27,H28,MMM	1
9	PAOZZ	4730009083194	96906	MS35842-11	CLAMP,HOSE PART OF KIT P/N 5705615.. UOC:AVY,A11,A13,A14,A15,A20,A24,A25, A26,A27,B16,B17,B18,HVY,H11,H13,H14,	8

(1) ITEM NO	(2) SMR CODE	(3) NSN	(4) CAGEC	(5) PART NUMBER	(6) DESCRIPTION AND USABLE ON CODES(UOC)	(7) QTY
					H15,H16,H17,H18,H20,H21,H24,H25,H26, H27,H28,MMM	
10	MOOZZ		96906	MS521301A203R 58	HOSE,NONMETALLIC MAKE FROM HOSE,P/N MS521301A203R,58 INCHES LONG PART OF KIT P/N 5705615..... UOC:AVY,A11,A13,A14,A15,A20,A24,A25, A26,A27,B16,B17,B18,HVY,H11,H13,H14, H15,H16,H17,H18,H20,H21,H24,H25,H26, H27,H28,MMM	1
11	PAOZZ	5340013145567	19207	12368392	BRACKET,MULTIPLE AN PART OF KIT P/N 5705615..... UOC:AVY,A11,A13,A14,A15,A20,A24,A25, A26,A27,B16,B17,B18,HVY,H11,H13,H14, H15,H16,H17,H18,H20,H21,H24,H25,H26, H27,H28,MMM	1
12	PAOZZ	5310005590070	96906	MS35333-38	WASHER,LOCK PART OF KIT P/N 5705615. UOC:AVY,A11,A13,A14,A15,A20,A24,A25, A26,A27,B16,B17,B18,HVY,H11,H13,H14, H15,H16,H17,H18,H20,H21,H24,H25,H26, H27,H28,MMM	1
13	PAOZZ	5306000680514	80204	B1821BH025F088N	BOLT,MACHINE 1/4-28 X 7/8 PART OF KIT P/N 5705615..... UOC:AVY,A11,A13,A14,A15,A20,A24,A25, A26,A27,B16,B17,B18,HVY,H11,H13,H14, H15,H16,H17,H18,H20,H21,H24,H25,H26, H27,H28,MMM	2
14	PAOZZ	5310008094058	96906	MS27183-10	WASHER,FLAT 1/4 PART OF KIT P/N 5705615..... UOC:AVY,A11,A13,A14,A15,A20,A24,A25, A26,A27,B16,B17,B18,HVY,H11,H13,H14, H15,H16,H17,H18,H20,H21,H24,H25,H26, H27,H28,MMM	16
15	PAOZZ	5340013154955	19207	12368375	CLAMP,LOOP PART OF KIT P/N 5705615.. UOC:AVY,A11,A13,A14,A15,A20,A24,A25, A26,A27,B16,B17,B18,HVY,H11,H13,H14, H15,H16,H17,H18,H20,H21,H24,H25,H26, H27,H28,MMM	2
16	PAOZZ	5325013097164	96906	MS35489-149	GROMMET,NONMETALLIC .875 PART OF KIT P/N 5705615..... UOC:AVY,A11,A13,A14,A15,A20,A24,A25, A26,A27,B16,B17,B18,HVY,H11,H13,H14, H15,H16,H17,H18,H20,H21,H24,H25,H26, H27,H28,MMM	1
17	PAOZZ	2540014456029	19207	12342880	INSULATION,THERMAL, L.H. PART OF KIT P/N 5705615..... UOC:AVY,A11,A13,A14,A15,A20,A24,A25, A26,A27,B16,B17,B18,HVY,H11,H13,H14, H15,H16,H17,H18,H20,H21,H24,H25,H26, H27,H28,MMM	1
18	PFOZZ	2540013509380	19207	12342038	WATER JACKET,VEHICU PART OF KIT P/N 5705615..... UOC:AVY,A11,A13,A14,A15,A20,A24,A25, A26,A27,B16,B17,B18,HVY,H11,H13,H14, H15,H16,H17,H18,H20,H21,H24,H25,H26,	1

(1) ITEM NO	(2) SMR CODE	(3) NSN	(4) CAGEC	(5) PART NUMBER	(6) DESCRIPTION AND USABLE ON CODES(UOC)	(7) QTY
					H27,H28,MMM	
19	PAOZZ	2835014657620	19207	12342881-1	INSULATION,COWL LEF L.H. PART OF KIT P/N 5705615..... UOC:AVY,A11,A13,A14,A15,A20,A24,A25, A26,A27,B16,B17,B18,HVY,H11,H13,H14, H15,H16,H17,H18,H20,H21,H24,H25,H26, H27,H28,MMM	1
20	PAOZZ	2540014491718	34623	12342878-1	ARMOR,SUPPLEMENTAL, R.H. PART OF KIT P/N 5705615..... UOC:AVY,A11,A13,A14,A15,A20,A24,A25, A26,A27,B16,B17,B18,HVY,H11,H13,H14, H15,H16,H17,H18,H20,H21,H24,H25,H26, H27,H28,MMM	1
20	PAOZZ	2540014519345	19207	12342878-2	ARMOR,SUPPLEMENTAL, L.H. PART OF KIT P/N 5705615..... UOC:AVY,A11,A13,A14,A15,A20,A24,A25, A26,A27,B16,B17,B18,HVY,H11,H13,H14, H15,H16,H17,H18,H20,H21,H24,H25,H26, H27,H28,MMM	1
21	PAOZZ	5320011357319	80205	NAS9301BNS-6-03	RIVET,BLIND 3/16 X 3/16 PART OF KIT P/N 5705615..... UOC:AVY,A11,A13,A14,A15,A20,A24,A25, A26,A27,B16,B17,B18,HVY,H11,H13,H14, H15,H16,H17,H18,H20,H21,H24,H25,H26, H27,H28,MMM	2
22	PAOZZ	5310009359022	96906	MS51943-32	NUT,SELF-LOCKING,HE 1/4-20 PART OF KIT P/N 5705615..... UOC:AVY,A11,A13,A14,A15,A20,A24,A25, A26,A27,B16,B17,B18,HVY,H11,H13,H14, H15,H16,H17,H18,H20,H21,H24,H25,H26, H27,H28,MMM	14
23	PAOZZ	5310006379541	96906	MS35338-46	WASHER,LOCK 1/4 PART OF KIT P/N 5705615..... UOC:AVY,A11,A13,A14,A15,A20,A24,A25, A26,A27,B16,B17,B18,HVY,H11,H13,H14, H15,H16,H17,H18,H20,H21,H24,H25,H26, H27,H28,MMM	4
24	PAOZZ	5306000680513	60285	6893-2	BOLT,MACHINE 1/4-20 X 3/4 PART OF KIT P/N 5705615..... UOC:AVY,A11,A13,A14,A15,A20,A24,A25, A26,A27,B16,B17,B18,HVY,H11,H13,H14, H15,H16,H17,H18,H20,H21,H24,H25,H26, H27,H28,MMM	4
25	PAOZZ	5310012805796	96906	MS27183-57	WASHER,FLAT 3/8 PART OF KIT P/N 5705615..... UOC:AVY,A11,A13,A14,A15,A20,A24,A25, A26,A27,B16,B17,B18,HVY,H11,H13,H14, H15,H16,H17,H18,H20,H21,H24,H25,H26, H27,H28,MMM	1
26	PAOZZ	2540013141130	19207	12368398	HOUSING,HEATER COMP PART OF KIT P/N 5705615..... UOC:AVY,A11,A13,A14,A15,A20,A24,A25, A26,A27,B16,B17,B18,HVY,H11,H13,H14, H15,H16,H17,H18,H20,H21,H24,H25,H26,	1

(1) ITEM NO	(2) SMR CODE	(3) NSN	(4) CAGEC	(5) PART NUMBER	(6) DESCRIPTION AND USABLE ON CODES(UOC)	(7) QTY
					H27,H28,MMM	
27	PAOZZ	5320012751998	11815	BAPKTR-64	RIVET,BLIND 1/8 PART OF KIT P/N 5705615..... UOC:AVY,A11,A13,A14,A15,A20,A24,A25, A26,A27,B16,B17,B18,HVY,H11,H13,H14, H15,H16,H17,H18,H20,H21,H24,H25,H26, H27,H28,MMM	11
28	PFOZZ	2540013173309	34623	12368400	GUARD ASSEMBLY,BRUS PART OF KIT P/N 5705615..... UOC:AVY,A11,A13,A14,A15,A20,A24,A25, A26,A27,B16,B17,B18,HVY,H11,H13,H14, H15,H16,H17,H18,H20,H21,H24,H25,H26, H27,H28,MMM	1
29	PAOZZ	5306000680513	60285	6893-2	BOLT,MACHINE 1/4-20 X 3/4 PART OF KIT P/N 5705615..... UOC:AVY,A11,A13,A14,A15,A20,A24,A25, A26,A27,B16,B17,B18,HVY,H11,H13,H14, H15,H16,H17,H18,H20,H21,H24,H25,H26, H27,H28,MMM	12
30	PAOZZ	2990013140151	19207	12368443	PIPE,EXHAUST PART OF KIT P/N 5705615 UOC:AVY,A11,A13,A14,A15,A20,A24,A25, A26,A27,B16,B17,B18,HVY,H11,H13,H14, H15,H16,H17,H18,H20,H21,H24,H25,H26, H27,H28,MMM	1
31	PFOZZ	4710013139340	19207	12342095	TUBE,BENT,METALLIC PART OF KIT P/N 5705615..... UOC:AVY,A11,A13,A14,A15,A20,A24,A25, A26,A27,B16,B17,B18,HVY,H11,H13,H14, H15,H16,H17,H18,H20,H21,H24,H25,H26, H27,H28,MMM	1
32	MOOZZ		96906	MS521301A203R 7	HOSE,NONMETALLIC MAKE FROM HOSE,P/N MS521301A203R,7.50 INCHES LONG PART OF KIT P/N 5705615..... UOC:AVY,A11,A13,A14,A15,A20,A24,A25, A26,A27,B16,B17,B18,HVY,H11,H13,H14, H15,H16,H17,H18,H20,H21,H24,H25,H26, H27,H28,MMM	1
33	PAOZZ	2930013140145	19207	12342294	PUMP,COOLING SYSTEM PART OF KIT P/N 5705615..... UOC:AVY,A11,A13,A14,A15,A20,A24,A25, A26,A27,B16,B17,B18,HVY,H11,H13,H14, H15,H16,H17,H18,H20,H21,H24,H25,H26, H27,H28,MMM	1
34	PAOZZ	4730009098627	01276	FF9311-36	CLAMP,HOSE PART OF KIT P/N 5705615.. UOC:AVY,A11,A13,A14,A15,A20,A24,A25, A26,A27,B16,B17,B18,HVY,H11,H13,H14, H15,H16,H17,H18,H20,H21,H24,H25,H26, H27,H28,MMM	1
35	PAOZZ	5340013142445	19207	12368374	BRACKET,MOUNTING PART OF KIT P/N 5705615..... UOC:AVY,A11,A13,A14,A15,A20,A24,A25, A26,A27,B16,B17,B18,HVY,H11,H13,H14, H15,H16,H17,H18,H20,H21,H24,H25,H26, H27,H28,MMM	1

(1) ITEM NO	(2) SMR CODE	(3) NSN	(4) CAGEC	(5) PART NUMBER	(6) DESCRIPTION AND USABLE ON CODES(UOC)	(7) QTY
36	PAOZZ	5365012550965	19207	12338521-14	SPACER,SLEEVE PART OF KIT P/N 5705615..... UOC:AVY,A11,A13,A14,A15,A20,A24,A25, A26,A27,B16,B17,B18,HVY,H11,H13,H14, H15,H16,H17,H18,H20,H21,H24,H25,H26, H27,H28,MMM	2
37	PAOZZ	5310012067306	7X677	11500207	WASHER,LOCK PART OF KIT P/N 5705615. UOC:AVY,A11,A13,A14,A15,A20,A24,A25, A26,A27,B16,B17,B18,HVY,H11,H13,H14, H15,H16,H17,H18,H20,H21,H24,H25,H26, H27,H28,MMM	2
38	PAOZZ	5310013151535	24617	11505922	NUT,PLAIN,HEXAGON M10-O.35 PART OF KIT P/N 5705615..... UOC:AVY,A11,A13,A14,A15,A20,A24,A25, A26,A27,B16,B17,B18,HVY,H11,H13,H14, H15,H16,H17,H18,H20,H21,H24,H25,H26, H27,H28,MMM	2
39	PAOZZ	4730009083193	7Z588	30024H	CLAMP,HOSE PART OF KIT P/N 5705615.. UOC:AVY,A11,A13,A14,A15,A20,A24,A25, A26,A27,B16,B17,B18,HVY,H11,H13,H14, H15,H16,H17,H18,H20,H21,H24,H25,H26, H27,H28,MMM	2
40	PAOZZ	4720012111998	19207	12340492	HOSE,NONMETALLIC PART OF KIT P/N 5705615..... UOC:AVY,A11,A13,A14,A15,A20,A24,A25, A26,A27,B16,B17,B18,HVY,H11,H13,H14, H15,H16,H17,H18,H20,H21,H24,H25,H26, H27,H28,MMM	2
41	MOOZZ		96906	521301A203R 5.50	HOSE,NONMETALLIC MAKE FROM HOSE,P/N MS521301A203R,5.50 INCHES LONG PART OF KIT P/N 5705615..... UOC:AVY,A11,A13,A14,A15,A20,A24,A25, A26,A27,B16,B17,B18,HVY,H11,H13,H14, H15,H16,H17,H18,H20,H21,H24,H25,H26, H27,H28,MMM	1
42	PAOZZ	4710012572649	19207	12340498	TUBE ASSEMBLY,METAL PART OF KIT P/N 5705615..... UOC:AVY,A11,A13,A14,A15,A20,A24,A25, A26,A27,B16,B17,B18,HVY,H11,H13,H14, H15,H16,H17,H18,H20,H21,H24,H25,H26, H27,H28,MMM	1
43	PAOZZ	4720012572655	19207	12340493	HOSE,PREFORMED PART OF KIT P/N 5705615..... UOC:AVY,A11,A13,A14,A15,A20,A24,A25, A26,A27,B16,B17,B18,HVY,H11,H13,H14, H15,H16,H17,H18,H20,H21,H24,H25,H26, H27,H28,MMM	1
44	PAOZZ	4730001003918	96906	MS24521-7	TEE,HOSE PART OF KIT P/N 5705615.... UOC:AVY,A11,A13,A14,A15,A20,A24,A25, A26,A27,B16,B17,B18,HVY,H11,H13,H14, H15,H16,H17,H18,H20,H21,H24,H25,H26, H27,H28,MMM	1
45	PFOZZ	5340013201079	19207	12368387	BRACKET,ANGLE PART OF KIT P/N 5705615.....	1

(1) ITEM NO	(2) SMR CODE	(3) NSN	(4) CAGEC	(5) PART NUMBER	(6) DESCRIPTION AND USABLE ON CODES(UOC)	(7) QTY
					UOC:AVY,A11,A13,A14,A15,A20,A24,A25, A26,A27,B16,B17,B18,HVY,H11,H13,H14, H15,H16,H17,H18,H20,H21,H24,H25,H26, H27,H28,MMM	
46	PAOZZ	5340009936207	96906	MS21333-99	CLAMP,LOOP PART OF KIT P/N 5705615.. UOC:AVY,A11,A13,A14,A15,A20,A24,A25, A26,A27,B16,B17,B18,HVY,H11,H13,H14, H15,H16,H17,H18,H20,H21,H24,H25,H26, H27,H28,MMM	1
47	PAOZZ	5340013154120	19207	12368391	PLATE,MOUNTING PART OF KIT P/N 5705615..... UOC:AVY,A11,A13,A14,A15,A20,A24,A25, A26,A27,B16,B17,B18,HVY,H11,H13,H14, H15,H16,H17,H18,H20,H21,H24,H25,H26, H27,H28,MMM	1
48	PAOZZ	5975012113142	28520	SB-750-625-2840	BUSHING,ELECTRICAL PART OF KIT P/N 5705615..... UOC:AVY,A11,A13,A14,A15,A20,A24,A25, A26,A27,B16,B17,B18,HVY,H11,H13,H14, H15,H16,H17,H18,H20,H21,H24,H25,H26, H27,H28,MMM	1
49	PAOZZ	5310008775797	96906	MS21044-N3	NUT,SELF-LOCKING,HE #10-32 PART OF KIT P/N 5705615..... UOC:AVY,A11,A13,A14,A15,A20,A24,A25, A26,A27,B16,B17,B18,HVY,H11,H13,H14, H15,H16,H17,H18,H20,H21,H24,H25,H26, H27,H28,MMM	2
50	PAOZZ	5310013335245	24617	271175	NUT,SELF-LOCKING,HE 1/4-20 PART OF KIT P/N 5705615..... UOC:AVY,A11,A13,A14,A15,A20,A24,A25, A26,A27,B16,B17,B18,HVY,H11,H13,H14, H15,H16,H17,H18,H20,H21,H24,H25,H26, H27,H28,MMM	1
51	PAOZZ	5340013146838	19207	12368390	PLATE,MENDING PART OF KIT P/N 5705615..... UOC:AVY,A11,A13,A14,A15,A20,A24,A25, A26,A27,B16,B17,B18,HVY,H11,H13,H14, H15,H16,H17,H18,H20,H21,H24,H25,H26, H27,H28,MMM	1
52	PAOZZ	5305000680515	80204	B1821BH025F100N	SCREW,CAP,HEXAGON H 1/4-28 X 1.00 PART OF KIT P/N 5705615..... UOC:AVY,A11,A13,A14,A15,A20,A24,A25, A26,A27,B16,B17,B18,HVY,H11,H13,H14, H15,H16,H17,H18,H20,H21,H24,H25,H26, H27,H28,MMM	2
53	PAOZZ	5305009897435	96906	MS35207-264	SCREW,MACHINE #10-32 X 5/8 PART OF KIT P/N 5705615..... UOC:AVY,A11,A13,A14,A15,A20,A24,A25, A26,A27,B16,B17,B18,HVY,H11,H13,H14, H15,H16,H17,H18,H20,H21,H24,H25,H26, H27,H28,MMM	2

END OF FIGURE

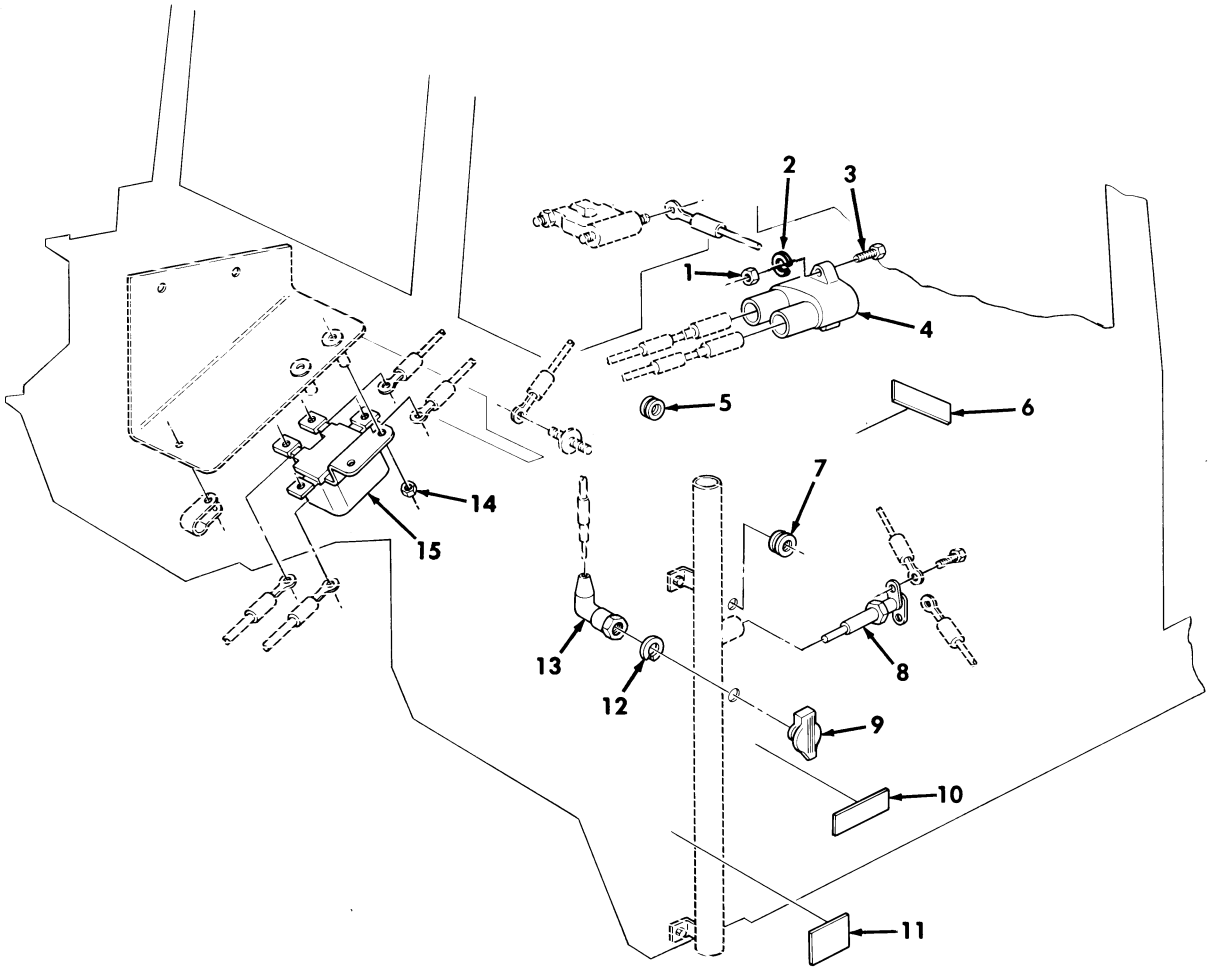

Figure 380. Swingfire Heater Kit, Circuit Breaker and Related Parts.

(1) ITEM NO	(2) SMR CODE	(3) NSN	(4) CAGEC	(5) PART NUMBER	(6) DESCRIPTION AND USABLE ON CODES(UOC)	(7) QTY
					GROUP 3303 WINTERIZATION KITS	
					FIG. 380 SWINGFIRE HEATER KIT, CIRCUIT BREAKER AND RELATED PARTS	
1	PAOZZ	5310009349754	96906	MS35650-382	NUT,PLAIN,HEXAGON #8-32 PART OF KIT P/N 5705615..... UOC:AVY,A11,A13,A14,A15,A20,A24,A25, A26,A27,B16,B17,B18,HVY,H11,H13,H14, H15,H16,H17,H18,H20,H21,H24,H25,H26, H27,H28,MMM	2
2	PAOZZ	5310000453299	96906	MS35338-42	WASHER,LOCK PART OF KIT P/N 5705615. UOC:AVY,A11,A13,A14,A15,A20,A24,A25, A26,A27,B16,B17,B18,HVY,H11,H13,H14, H15,H16,H17,H18,H20,H21,H24,H25,H26, H27,H28,MMM	2
3	PAOZZ	5305009846195	96906	MS35206-247	SCREW,MACHINE #8-32 X 3/4 PART OF KIT P/N 5705615..... UOC:AVY,A11,A13,A14,A15,A20,A24,A25, A26,A27,B16,B17,B18,HVY,H11,H13,H14, H15,H16,H17,H18,H20,H21,H24,H25,H26, H27,H28,MMM	2
4	PAOZZ	5925014302318	58536	AA5557/01-001	CIRCUIT BREAKER PART OF KIT P/N 5705615..... UOC:AVY,A11,A13,A14,A15,A20,A24,A25, A26,A27,B16,B17,B18,HVY,H11,H13,H14, H15,H16,H17,H18,H20,H21,H24,H25,H26, H27,H28,MMM	1
5	PAOZZ	5325002708891	96906	MS35489-21	GROMMET,NONMETALLIC PART OF KIT P/N 5705615..... UOC:AVY,A11,A13,A14,A15,A20,A24,A25, A26,A27,B16,B17,B18,HVY,H11,H13,H14, H15,H16,H17,H18,H20,H21,H24,H25,H26, H27,H28,MMM	1
6	PAOZZ	9905013177987	19207	12342026	PLATE,INSTRUCTION PART OF KIT P/N 5705615..... UOC:AVY,A11,A13,A14,A15,A20,A24,A25, A26,A27,B16,B17,B18,HVY,H11,H13,H14, H15,H16,H17,H18,H20,H21,H24,H25,H26, H27,H28,MMM	1
7	PAOZZ	5325002919366	96906	MS35489-11	GROMMET,NONMETALLIC PART OF KIT P/N 5705615..... UOC:AVY,A11,A13,A14,A15,A20,A24,A25, A26,A27,B16,B17,B18,HVY,H11,H13,H14, H15,H16,H17,H18,H20,H21,H24,H25,H26, H27,H28,MMM	1
8	PAOZZ	5930013182809	19207	12356766	SWITCH,THERMOSTATIC PART OF KIT P/N 5705615..... UOC:AVY,A11,A13,A14,A15,A20,A24,A25, A26,A27,B16,B17,B18,HVY,H11,H13,H14, H15,H16,H17,H18,H20,H21,H24,H25,H26, H27,H28,MMM	1
9	PAOZZ	5935013142084	19207	11669531	CONNECTOR SET,ELECT PART OF KIT P/N	1

(1) ITEM NO	(2) SMR CODE	(3) NSN	(4) CAGEC	(5) PART NUMBER	(6) DESCRIPTION AND USABLE ON CODES(UOC)	(7) QTY
					5705615..... UOC:AVY,A11,A13,A14,A15,A20,A24,A25, A26,A27,B16,B17,B18,HVY,H11,H13,H14, H15,H16,H17,H18,H20,H21,H24,H25,H26, H27,H28,MMM	
10	PAOZZ	9905013177986	19207	12342027	PLATE,IDENTIFICATIO PART OF KIT P/N 5705615..... UOC:AVY,A11,A13,A14,A15,A20,A24,A25, A26,A27,B16,B17,B18,HVY,H11,H13,H14, H15,H16,H17,H18,H20,H21,H24,H25,H26, H27,H28,MMM	1
11	PAOZZ	7690013158540	19207	12342024	MARKER,IDENTIFICATI PART OF KIT P/N 5705615..... UOC:AVY,A11,A13,A14,A15,A20,A24,A25, A26,A27,B16,B17,B18,HVY,H11,H13,H14, H15,H16,H17,H18,H20,H21,H24,H25,H26, H27,H28,MMM	1
12	PAOZZ	5310005503714	96906	MS35333-47	WASHER,LOCK 3/4 PART OF KIT P/N 5705615..... UOC:AVY,A11,A13,A14,A15,A20,A24,A25, A26,A27,B16,B17,B18,HVY,H11,H13,H14, H15,H16,H17,H18,H20,H21,H24,H25,H26, H27,H28,MMM	1
13	PAOZZ	5975005536995	96906	MS25171-1S	CABLE NIPPLE,ELECTR PART OF KIT P/N 5705615..... UOC:AVY,A11,A13,A14,A15,A20,A24,A25, A26,A27,B16,B17,B18,HVY,H11,H13,H14, H15,H16,H17,H18,H20,H21,H24,H25,H26, H27,H28,MMM	1
14	PAOZZ	5310009359022	96906	MS51943-32	NUT,SELF-LOCKING,HE 1/4-28 PART OF KIT P/N 5705615..... UOC:AVY,A11,A13,A14,A15,A20,A24,A25, A26,A27,B16,B17,B18,HVY,H11,H13,H14, H15,H16,H17,H18,H20,H21,H24,H25,H26, H27,H28,MMM	2
15	PAOZZ	2920008483292	16764	1116968	CUTOUT RELAY,ENGINE 24 VOLTS PART OF KIT P/N 5705615..... UOC:AVY,A11,A13,A14,A15,A20,A24,A25, A26,A27,B16,B17,B18,HVY,H11,H13,H14, H15,H16,H17,H18,H20,H21,H24,H25,H26, H27,H28,MMM	1

END OF FIGURE

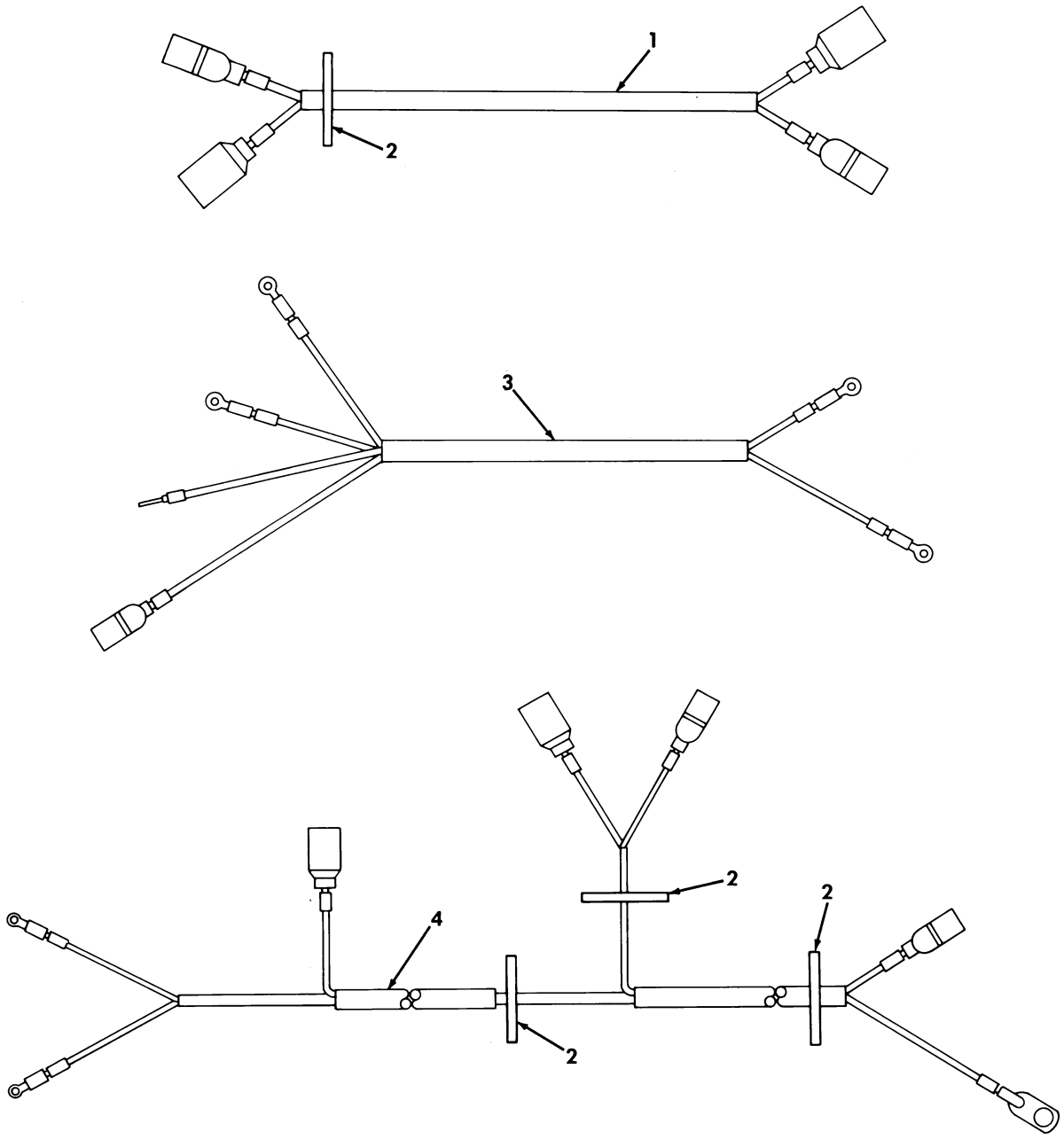

Figure 381. Swingfire Heater Kit, Harness Assemblies.

(1) ITEM NO	(2) SMR CODE	(3) NSN	(4) CAGEC	(5) PART NUMBER	(6) DESCRIPTION AND USABLE ON CODES(UOC)	(7) QTY
					GROUP 3303 WINTERIZATION KITS	
					FIG. 381 SWINGFIRE HEATER KIT, HARNESS ASSEMBLIES	
1	PAOZZ	6150013145643	19207	12368396	CABLE ASSEMBLY,SPEC PART OF KIT P/N 5705615..... UOC:AVY,A11,A13,A14,A15,A20,A24,A25, A26,A27,B16,B17,B18,HVY,H11,H13,H14, H15,H16,H17,H18,H20,H21,H24,H25,H26, H27,H28,MMM	1
2	PAOZZ	5975005709598	96906	MS3367-7-9	STRAP,TIEDOWN,ELECT PART OF KIT P/N 5705615..... UOC:AVY,A11,A13,A14,A15,A20,A24,A25, A26,A27,B16,B17,B18,HVY,H11,H13,H14, H15,H16,H17,H18,H20,H21,H24,H25,H26, H27,H28,MMM	4
3	PAOZZ	6150013151148	19207	12368394	WIRING HARNESS,BRAN PART OF KIT P/N 5705615..... UOC:AVY,A11,A13,A14,A15,A20,A24,A25, A26,A27,B16,B17,B18,HVY,H11,H13,H14, H15,H16,H17,H18,H20,H21,H24,H25,H26, H27,H28,MMM	1
4	PFOZZ	6150013145241	19207	12368395	CABLE ASSEMBLY,SPEC PART OF KIT P/N 5705615..... UOC:AVY,A11,A13,A14,A15,A20,A24,A25, A26,A27,B16,B17,B18,HVY,H11,H13,H14, H15,H16,H17,H18,H20,H21,H24,H25,H26, H27,H28,MMM	1
KIT	PDFZZ	2540013149320	19207	5705615	PARTS KIT,VEHICULAR SWINGFIRE HEATER..... UOC:AVY,A11,A13,A14,A15,A20,A24,A25, A26,A27,B16,B17,B18,HVY,H11,H13,H14, H15,H16,H17,H18,H20,H21,H24,H25,H26, H27,H28,MMM	1
					ARMOR,SUPPLEMENTAL,(1) 379-20	
					ARMOR,SUPPLEMENTAL,(1) 379-20	
					BOLT,MACHINE (12) 379-29	
					BOLT,MACHINE (4) 379-24	
					BOLT,MACHINE (2) 379-13	
					BRACKET,MOUNTING (1) 379-35	
					BRACKET,ANGLE (1) 379-45	
					BRACKET,MULTIPLE AN(1) 379-11	
					BUSHING,ELECTRICAL (1) 379-48	
					CABLE ASSEMBLY,SPEC(1) 381-4	
					CABLE ASSEMBLY,SPEC(1) 381-1	
					CABLE NIPPLE,ELECTR(1) 380-13	
					CIRCUIT BREAKER (1) 380-4	
					CLAMP,HOSE (8) 379-9	
					CLAMP,HOSE (2) 379-39	
					CLAMP,HOSE (1) 379-34	
					CLAMP,LOOP (2) 379-15	
					CLAMP,LOOP (4) 379-2	

(1) ITEM NO	(2) SMR CODE	(3) NSN	(4) CAGEC	(5) PART NUMBER	(6) DESCRIPTION AND USABLE ON CODES(UOC)	(7) QTY
					CLAMP,LOOP (1) 379-46	
					CONNECTOR SET,ELECT(1) 380-9	
					CUTOUT RELAY,ENGINE(1) 380-15	
					GROMMET,NONMETALLIC(1) 380-7	
					GROMMET,NONMETALLIC(1) 380-5	
					GROMMET,NONMETALLIC(1) 379-16	
					GUARD ASSEMBLY,BRUS(1) 379-28	
					HOSE,NONMETALLIC (1) 379-8	
					HOSE,NONMETALLIC (1) 379-10	
					HOSE,NONMETALLIC (1) 379-32	
					HOSE,NONMETALLIC (2) 379-40	
					HOSE,NONMETALLIC (1) 379-41	
					HOSE,PREFORMED (1) 379-43	
					HOUSING,HEATER COMP(1) 379-26	
					INSULATION,COWL LEF(1) 379-19	
					INSULATION,THERMAL,(1) 379-17	
					MARKER,IDENTIFICATI(1) 380-11	
					NUT,PLAIN,HEXAGON (2) 380-1	
					NUT,PLAIN,HEXAGON (2) 379-38	
					NUT,SELF-LOCKING,HE(2) 379-49	
					NUT,SELF-LOCKING,HE(3) 379-3	
					NUT,SELF-LOCKING,HE(14) 379-22	
					NUT,SELF-LOCKING,HE(2) 380-14	
					NUT,SELF-LOCKING,HE(1) 379-50	
					PIPE,EXHAUST (1) 379-30	
					PLATE,IDENTIFICATIO(1) 380-10	
					PLATE,INSTRUCTION (1) 380-6	
					PLATE,MENDING (1) 379-51	
					PLATE,MOUNTING (1) 379-47	
					PUMP,COOLING SYSTEM(1) 379-33	
					RIVET,BLIND (11) 379-27	
					RIVET,BLIND (2) 379-21	
					SCREW,CAP,HEXAGON H(2) 379-52	
					SCREW,MACHINE (3) 379-1	
					SCREW,MACHINE (2) 380-3	
					SCREW,MACHINE (2) 379-53	
					SCREW,TAPPING (3) 379-5	
					SPACER,PLATE (1) 379-6	
					SPACER,PLATE (1) 379-4	
					SPACER,SLEEVE (2) 379-36	
					STRAP,TIEDOWN,ELECT(9) 379-7	
					STRAP,TIEDOWN,ELECT(4) 381-2	
					SWITCH,THERMOSTATIC(1) 380-8	
					TEE,HOSE (1) 379-44	
					TUBE ASSEMBLY,METAL(1) 379-42	
					TUBE,BENT,METALLIC (1) 379-31	
					WASHER,FLAT (16) 379-14	
					WASHER,LOCK (1) 379-12	
					WASHER,LOCK (1) 380-12	
					WASHER,LOCK (2) 379-37	
					WASHER,LOCK (4) 379-23	
					WASHER,LOCK (1) 379-25	
					WASHER,LOCK (2) 380-2	

(1) ITEM NO	(2) SMR CODE	(3) NSN	(4) CAGEC	(5) PART NUMBER	(6) DESCRIPTION AND USABLE ON CODES(UOC)	(7) QTY
					WATER JACKET,VEHICU(1) 379-18	
					WIRING HARNESS,BRAN(1) 381-3	

END OF FIGURE

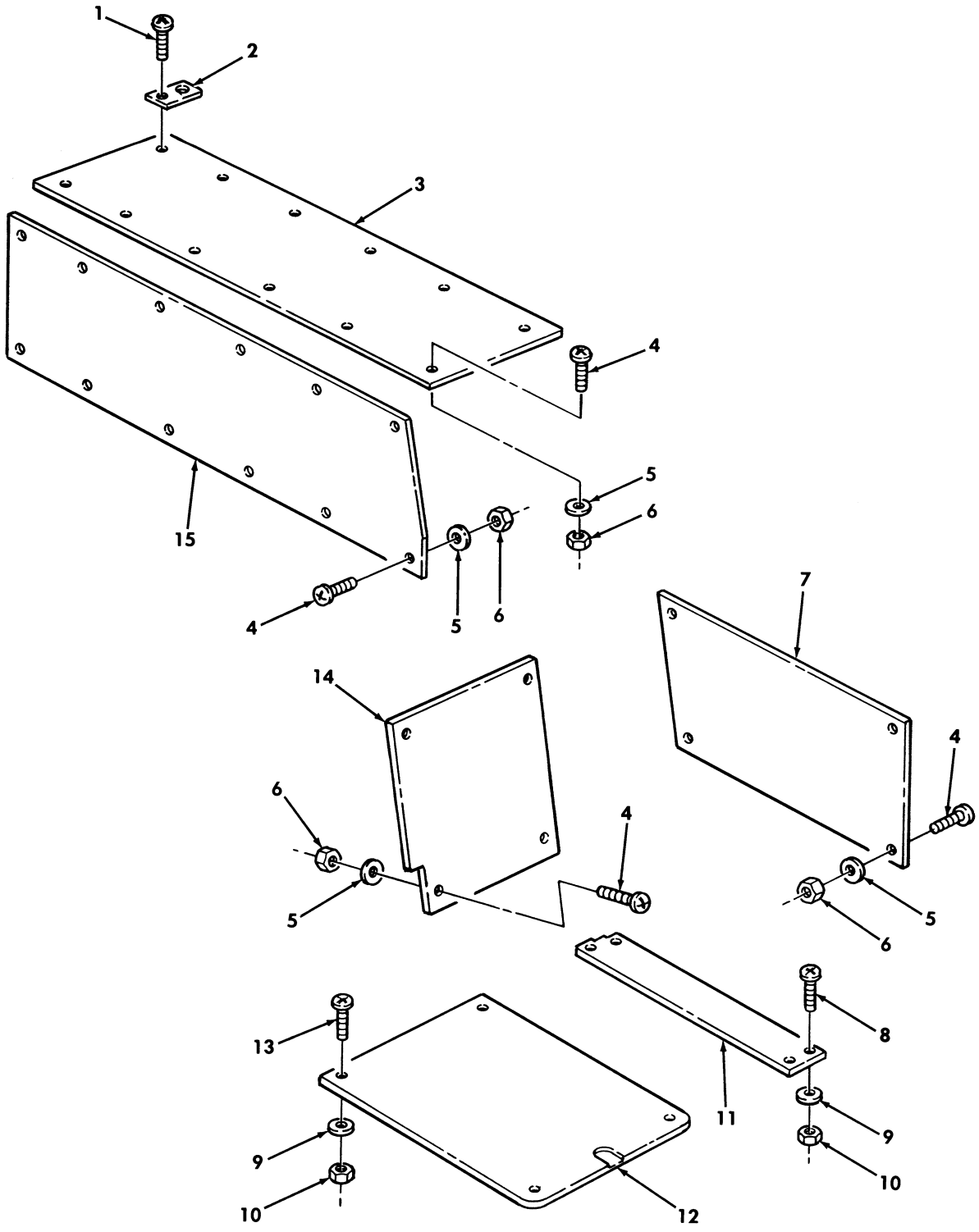

Figure 382. Two Door Seat and Floor Covers.

(1) ITEM NO	(2) SMR CODE	(3) NSN	(4) CAGEC	(5) PART NUMBER	(6) DESCRIPTION AND USABLE ON CODES(UOC)	(7) QTY
					GROUP 3303 WINTERIZATION KITS	
					FIG. 382 TWO DOOR SEAT AND FLOOR COVERS	
1	PAOZZ	5305009002546	96906	MS35492-28	SCREW,WOOD #6 X .50,PART OF KIT P/N 5705611..... UOC:A13,A14,H13,H14	12
2	PAOZZ	5365013168966	19207	12342210	SPACER,PLATE PART OF KIT P/N 5705611 UOC:A13,A14,H13,H14	12
3	KFFZZ		19207	12342181	TOP COVER ASSEMBLY L.H.,PART OF KIT P/N 5705611..... UOC:A13,A14,H13,H14	1
3	KFFZZ		19207	12342182-2	TOP COVER ASSEMBLY R.H.,PART OF KIT 5705611..... UOC:A13,A14,H13,H14	1
4	PAOZZ	5305009932457	96906	MS35207-284	SCREW,MACHINE #10-32 X 1.50,PART OF KIT P/N 5705611..... UOC:A13,A14,H13,H14	48
5	PAOZZ	5310008094058	96906	MS27183-10	WASHER,FLAT #10,PART OF KIT P/N 5705611..... UOC:A13,A14,H13,H14	48
6	PAOZZ	5310004838791	96906	MS17829-4F	NUT,SELF-LOCKING,HE #10-32,PART OF KIT P/N 5705611..... UOC:A13,A14,H13,H14	48
7	MFFZZ		19207	12342171-1	COVER R.H., MAKE FROM PLYWOOD,P/N NN-P-530 PART OF KIT P/N 5705611.... UOC:A13,A14,H13,H14	1
7	MFFZZ		19207	12342171-2	COVER L.H.,MAKE FROM PLYWOOD,P/N NN-P-530 PART OF KIT P/N 5705611.... UOC:A13,A14,H13,H14	1
8	PAOZZ	5305009592704	96906	MS35191-324	SCREW,MACHINE 3/8-24 X 1.75,PART OF KIT P/N 5705611..... UOC:A13,A14,H13,H14	8
9	PAOZZ	5310010164871	88044	AN960-616	WASHER,FLAT 3/8,PART OF KIT P/N 5705611..... UOC:A13,A14,H13,H14	16
10	PAOZZ	5310010583353	72582	192481	NUT,SELF-LOCKING,HE 3/8-24,PART OF KIT P/N 5705611..... UOC:A13,A14,H13,H14	16
11	KFFZZ		19207	12342170	COVER,FLOOR L.H.,PART OF KIT P/N 5705611..... UOC:A13,A14,H13,H14	1
11	KFFZZ		19207	12342265	COVER,FLOOR R.H.,PART OF KIT P/N 5705611..... UOC:A13,A14,H13,H14	1
12	KFFZZ		19207	12342184	SEAT BACK PART OF KIT P/N 5705611.. UOC:A13,A14,H13,H14	2
13	PAOZZ	5305008242004	96906	MS35191-326	SCREW,MACHINE 3/8-24 X 2.50,PART OF KIT P/N 5705611..... UOC:A13,A14,H13,H14	8
14	KFFZZ		19207	12342172	COVER ASSEMBLY L.H.,PART OF KIT P/N 5705611.....	1

(1) ITEM NO	(2) SMR CODE	(3) NSN	(4) CAGEC	(5) PART NUMBER	(6) DESCRIPTION AND USABLE ON CODES(UOC)	(7) QTY
					UOC:A13,A14,H13,H14	
14	KFFZZ		19207	12342183	COVER ASSEMBLY R.H.,PART OF KIT P/N 5705611.....	1
					UOC:A13,A14,H13,H14	
15	KFFZZ		19207	12342180	COVER ASSEMBLY L.H.,SIDE,PART OF KIT P/N 5705611.....	1
15	KFFZZ		19207	12342257	COVER ASSEMBLY R.H.,SIDE,PART OF KIT P/N 5705611.....	1
					UOC:A13,A14,H13,H14	

END OF FIGURE

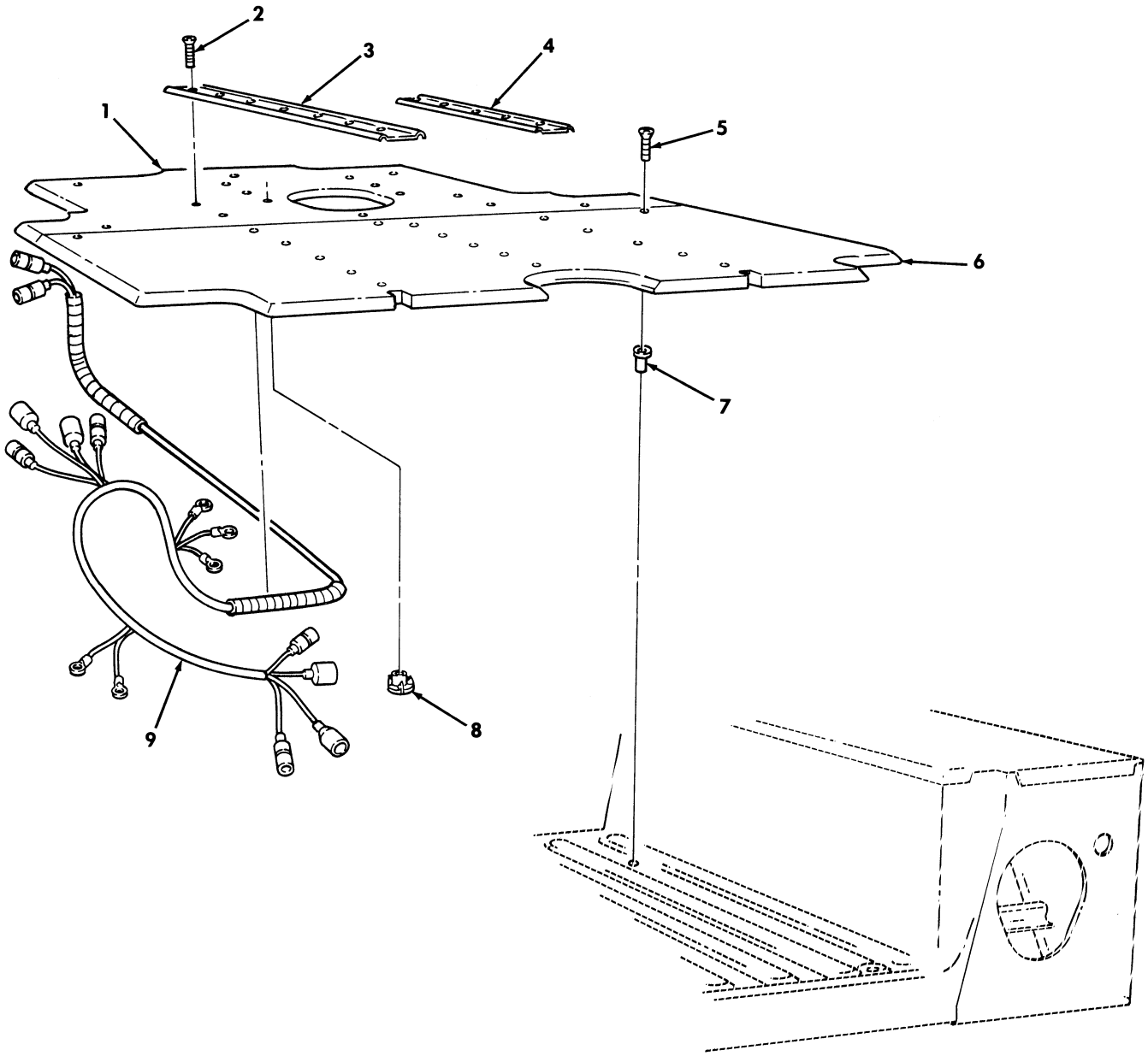

Figure 383. Cargo Floor Cover and Harness Assembly.

(1) ITEM NO	(2) SMR CODE	(3) NSN	(4) CAGEC	(5) PART NUMBER	(6) DESCRIPTION AND USABLE ON CODES(UOC)	(7) QTY
					GROUP 3303 WINTERIZATION KITS	
					FIG. 383 CARGO FLOOR COVER AND HARNESS ASSEMBLY	
1	KFFZZ		19207	12342178	FLOOR COVER ASSEMBL PART OF KIT P/N 5705611..... UOC:A13,A14,H13,H14	1
2	PAOZZ	5305009026643	96906	MS35492-76	SCREW,WOOD #10 X .75 PART OF KIT P/N 5705611..... UOC:A13,A14,H13,H14	19
3	PAOZZ	2590013174856	34623	12342179	MOLDING,METAL PART OF KIT P/N 5705611..... UOC:A13,A14,H13,H14	2
4	PAOZZ	2590013173953	34623	12342203	MOLDING,METAL PART OF KIT P/N 5705611..... UOC:A13,A14,H13,H14	1
5	PAOZZ	5305009585262	96906	MS35190-324	SCREW,MACHINE 3/8-16 X 2.25 PART OF KIT P/N 5705611..... UOC:A13,A14,H13,H14	9
6	KFFZZ		19207	12342177	FLOOR COVER ASSEMBL PART OF KIT P/N 5705611..... UOC:A13,A14,H13,H14	1
7	PAOZZ	5310012838482	96906	MS27130-CR31	NUT,PLAIN,BLIND RIV 3/8-16 PART OF KIT P/N 5705611..... UOC:A13,A14,H13,H14	9
8	PAOZZ	5310010256444	96906	MS51941-10	NUT,PLAIN,PLATE PART OF KIT P/N 5705611..... UOC:A13,A14,H13,H14	6
9	PFFZZ	6150013246356	19207	12342255	CABLE ASSEMBLY,SPEC PART OF KIT P/N 5705611..... UOC:A13,A14,H13,H14	1

END OF FIGURE

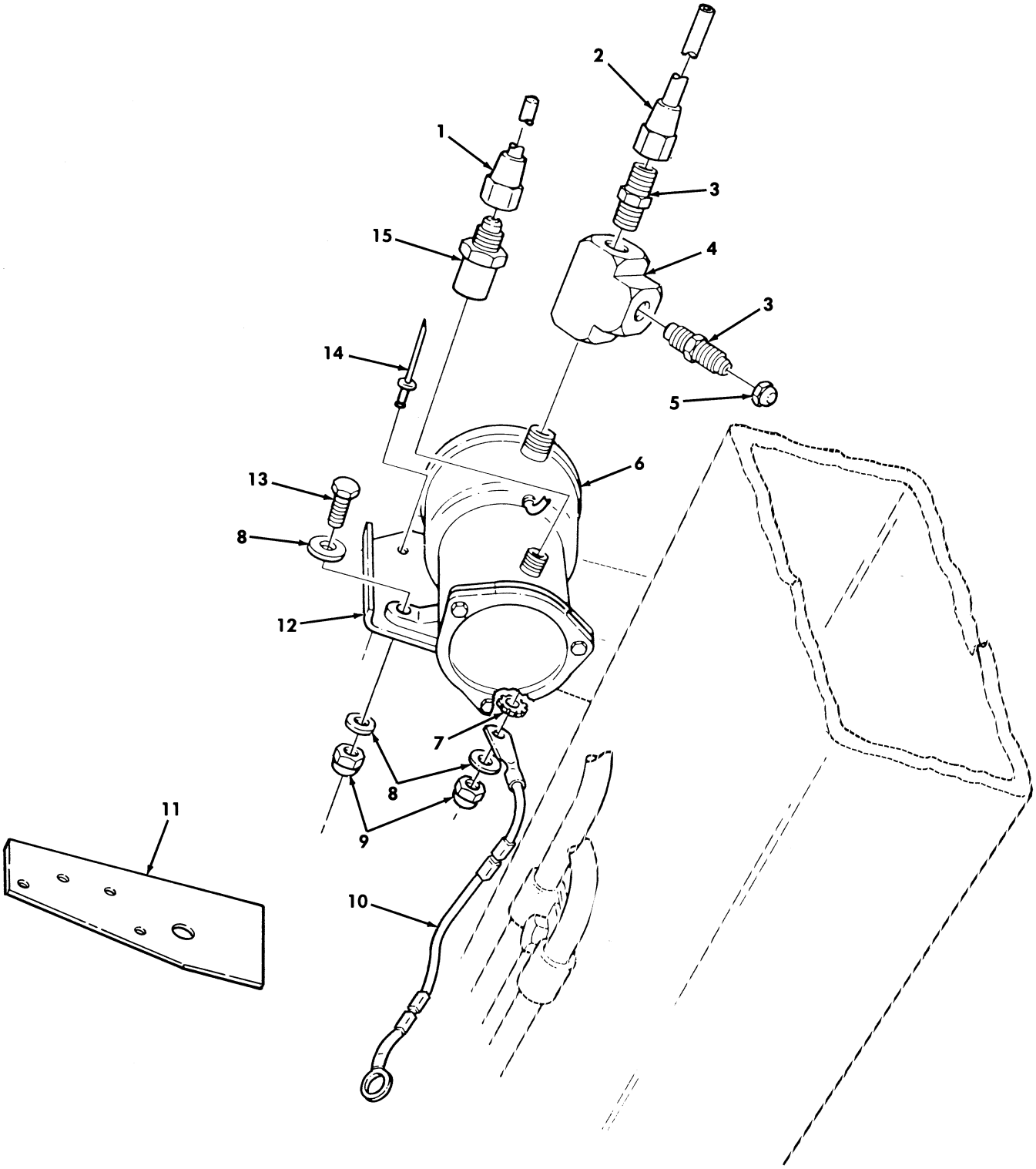

Figure 384. Winterization Kit, Fuel Pump, and Attaching Hardware.

(1) ITEM NO	(2) SMR CODE	(3) NSN	(4) CAGEC	(5) PART NUMBER	(6) DESCRIPTION AND USABLE ON CODES(UOC)	(7) QTY
					GROUP 3303 WINTERIZATION KITS	
					FIG. 384 WINTERIZATION KIT,FUEL PUMP AND ATTACHING HARDWARE	
1	PFOZZ	4710012030608	34623	5588696	TUBE ASSEMBLY,METAL PART OF KIT P/N 5705611..... UOC:A13,A14,H13,H14	1
2	PFOZZ	4710013171046	34623	12342277	TUBE ASSEMBLY,METAL PART OF KIT P/N 5705611..... UOC:A13,A14,H13,H14	1
3	PAOZZ	4730005291237	13899	191410	ADAPTER,STRAIGHT,PI PART OF KIT P/N 5705611..... UOC:A13,A14,H13,H14	2
4	PAOZZ	4730010489739	81343	4-4-4 140438C	TEE,PIPE PART OF KIT P/N 5705611... UOC:A13,A14,H13,H14	1
5	PAOZZ	4730002608285	81343	5010112B(N5)	CAP,TUBE PART OF KIT P/N 5705611... UOC:A13,A14,H13,H14	1
6	PAOZZ	2910014553197	96906	MS51321-2	PUMP,FUEL,ELECTRICA PART OF KIT P/N 5705611..... UOC:A13,A14,H13,H14	1
7	PAOZZ	5310005501130	96906	MS35338-40	WASHER,LOCK 1/4,PART OF KIT P/N 5705611..... UOC:A13,A14,H13,H14	1
8	PAOZZ	5310008094058	96906	MS27183-10	WASHER,FLAT 1/4,PART OF KIT P/N 5705611..... UOC:A13,A14,H13,H14	4
9	PAOZZ	5310000614650	96906	MS51943-31	NUT,SELF-LOCKING,HE PART OF KIT P/N 5705611..... UOC:A13,A14,H13,H14	2
10	PAOZZ	6150012608000	34623	5595746	LEAD,ELECTRICAL PART OF KIT P/N 5705611..... UOC:A13,A14,H13,H14	1
11	PFFZZ	2910013206645	34623	12340696	TEMPLATE,FUEL PART OF KIT P/N 5705611..... UOC:A13,A14,H13,H14	1
12	PFOZZ	5340012043903	19207	12338559	BRACKET,DOUBLE ANGL PART OF KIT P/N 5705611..... UOC:A13,A14,H13,H14	1
13	PAOZZ	5305000680502	96906	MS90725-6	SCREW,CAP,HEXAGON H 1/4-20 X .75, PART OF KIT P/N 5705611..... UOC:A13,A14,H13,H14	2
14	PAOZZ	5320011357319	81249	M7885/2-6-03	RIVET,BLIND .126-.187,PART OF KIT P/N 5705611..... UOC:A13,A14,H13,H14	4
15	PAOZZ	4730002776347	34623	5583386	ADAPTER,STRAIGHT,PI PART OF KIT P/N 5705611..... UOC:A13,A14,H13,H14	1

END OF FIGURE

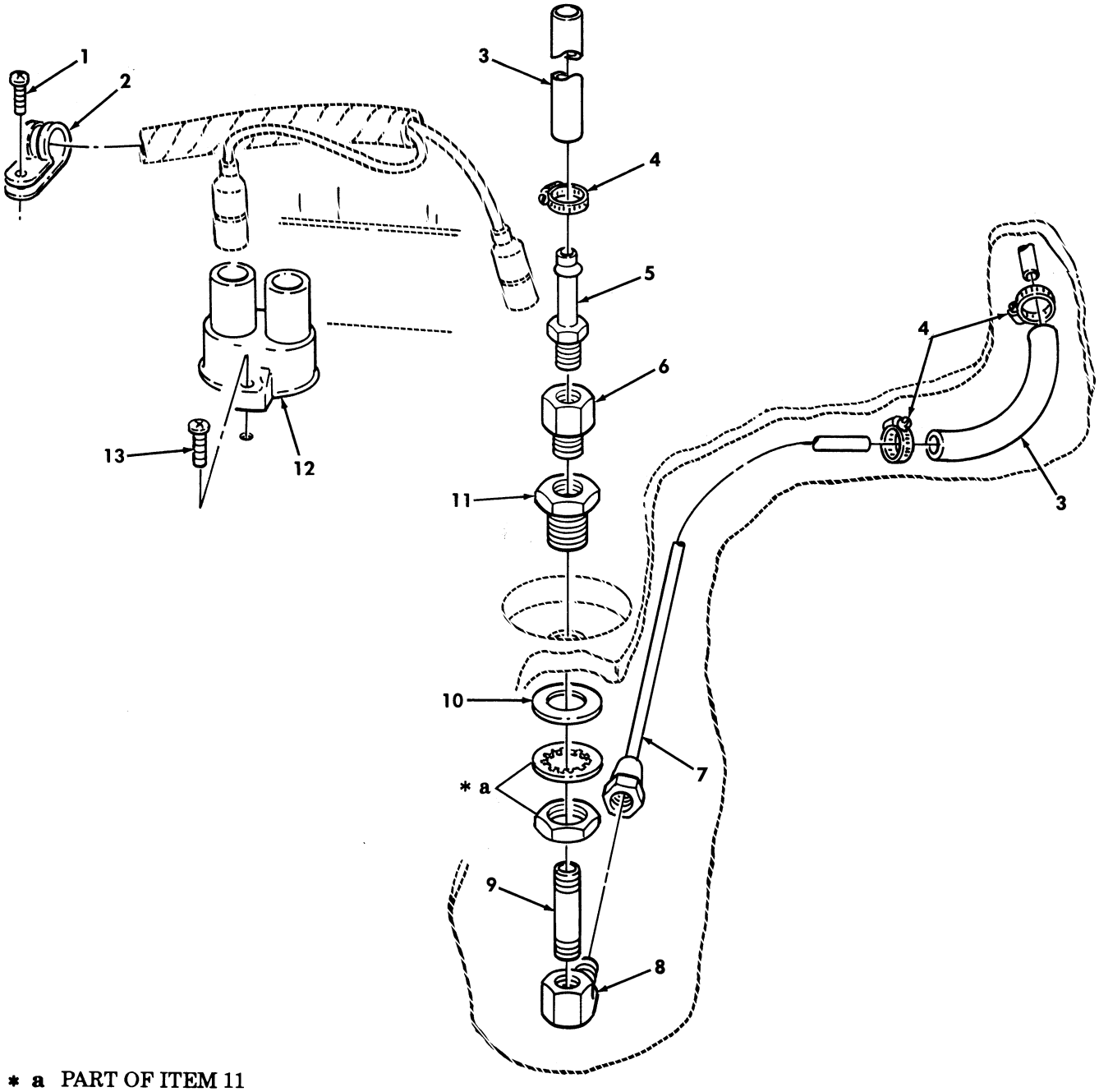

* a PART OF ITEM 11

Figure 385. Fuel Pump Tube Assembly.

(1) ITEM NO	(2) SMR CODE	(3) NSN	(4) CAGEC	(5) PART NUMBER	(6) DESCRIPTION AND USABLE ON CODES(UOC)	(7) QTY
					GROUP 3303 WINTERIZATION KITS	
					FIG. 385 FUEL PUMP TUBE ASSEMBLY	
1	PAOZZ	5305000567879	96906	MS35493-74	SCREW,WOOD #10 X .50,PART OF KIT P/N 5705611..... UOC:A13,A14,H13,H14	1
2	PAOZZ	5340009899222	96906	MS21333-74	CLAMP,LOOP PART OF KIT P/N 5705611. UOC:A13,A14,H13,H14	1
3	MOOZZ		7X677	94383154-3	TUBE MAKE FROM HOSE,P/N MIL-H-13444, 7 INCHES LONG PART OF KIT P/N 5705611..... UOC:A13,A14,H13,H14	2
4	PAOZZ	4730002782523	88907	B54-32780	CLAMP,LOOP PART OF KIT P/N 5705611. UOC:A13,A14,H13,H14	3
5	PAOZZ	4730013576523	4A439	BN252	ADAPTER,ATRAIGHT,PI PART OF KIT P/N 5705611..... UOC:A13,A14,H13,H14	1
6	PAOZZ	4730013477342	81343	4-4 130139C	COUPLING,PIPE PART OF KIT P/N 5705611..... UOC:A13,A14,H13,H14	1
7	PAOZZ	4710013171045	34623	12342270	TUBE ASEMBLY,METAL PART OF KIT P/N 5705611..... UOC:A13,A14,H13,H14	1
8	PFOZZ	4730012031025	81343	5010203CA	ELBOW,PIPE TO TUBE PART OF KIT P/N 5705611..... UOC:A13,A14,H13,H14	1
9	PAOZZ	4730013153242	96906	MS51873-32	NIPPLE,PIPE PART OF KIT P/N 5705611 UOC:A13,A14,H13,H14	1
10	PAOZZ	5310008098533	96906	MS27183-23	WASHER,FLAT 1-1/2,PART OF KIT P/N 5705611..... UOC:A13,A14,H13,H14	1
11	PAOZZ	4730008975497	79470	W21204	COUPLING,PIPE PART OF KIT P/N 5705611..... UOC:A13,A14,H13,H14	1
12	PAOZZ	5925000264767	81349	M13516/1-1	CIRCUIT BREAKER PART OF KIT P/N 5705611..... UOC:A13,A14,H13,H14	1
13	PAOZZ	5305009012134	96906	MS35493-55	SCREW,WOOD #8 X 1.00,PART OF KIT P/N 5705611..... UOC:A13,A14,H13,H14	2

END OF FIGURE

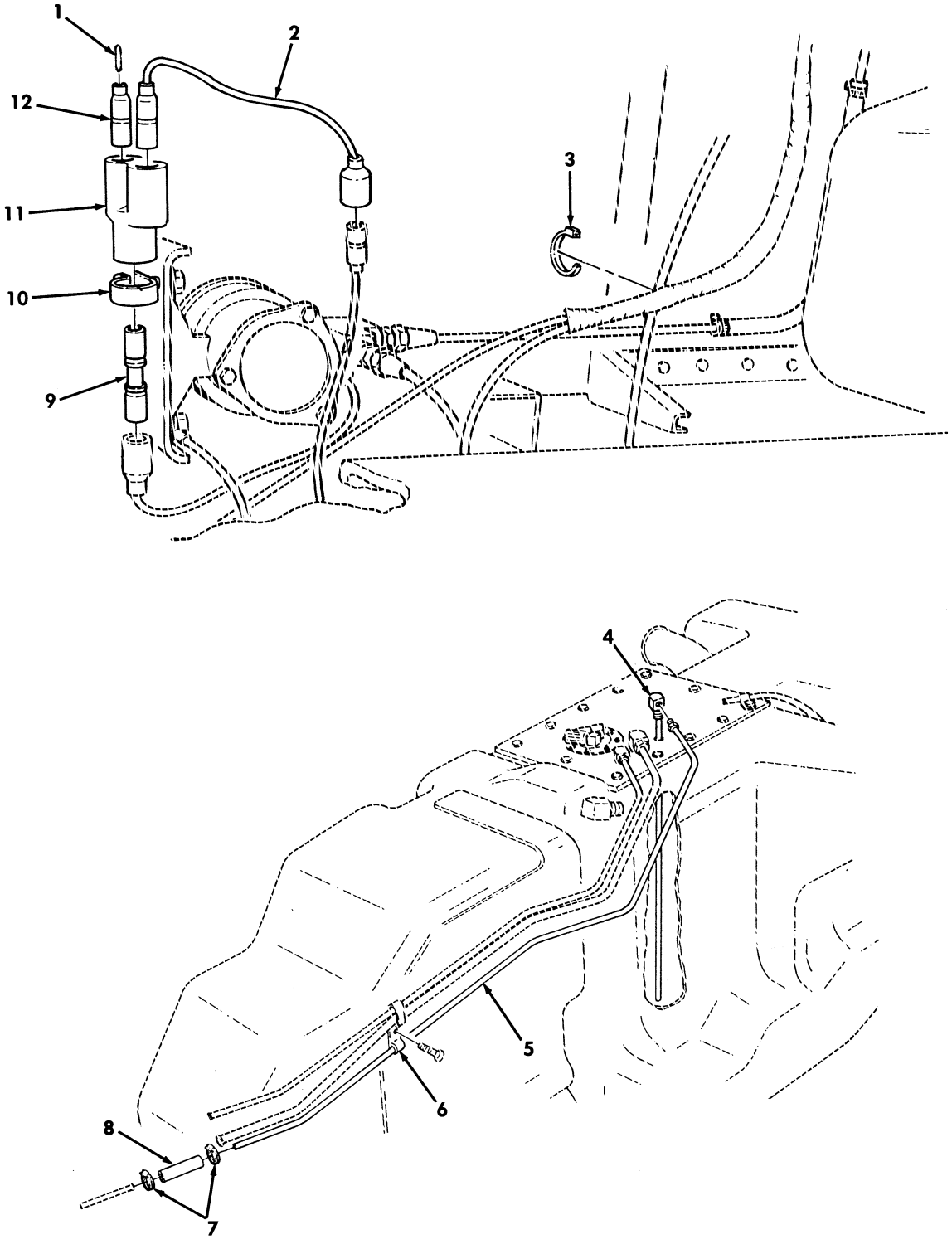

Figure 386. Winterization Kit, Fuel Line and Jumper Cable.

(1) ITEM NO	(2) SMR CODE	(3) NSN	(4) CAGEC	(5) PART NUMBER	(6) DESCRIPTION AND USABLE ON CODES(UOC)	(7) QTY
					GROUP 3303 WINTERIZATION KITS	
					FIG. 386 WINTERIZATION KIT,FUEL LINE AND JUMPER CABLE	
1	PAOZZ	5935002140904	19207	7982907	DUMMY,CONNECTOR,PLU PART OF KIT P/N 5705611..... UOC:A13,A14,H13,H14	1
2	PAOZZ	6150013960906	19207	12342902	LEAD,ELECTRICAL PART OF KIT P/N 5705611..... UOC:A13,A14,H13,H14	1
3	PAOZZ	5975001338687	96906	MS3367-5-0	STRAP,TIEDOWN,ELECT PART OF KIT P/N 5705611..... UOC:A13,A14,H13,H14	1
4	PAOZZ	4710012030615	34623	5578694	TUBE ASSEMBLY,METAL PART OF KIT P/N 5705611..... UOC:A13,A14,H13,H14	1
5	PAOZZ	4710012030607	34623	5588694	TUBE ASSEMBLY,METAL PART OF KIT P/N 5705611..... UOC:A13,A14,H13,H14	1
6	PAOZZ	5340009936207	96906	MS21333-99	CLAMP,LOOP PART OF KIT P/N 5705611. UOC:A13,A14,H13,H14	1
7	PAOZZ	4730011188278	76599	MMF4-SS	CLAMP,HOSE PART OF KIT P/N 57T5611. UOC:A13,A14,H13,H14	2
8	PAOZZ	4720013162538	9C234	12338553-1	HOSE,NONMETALLIC PART OF KIT P/N 5705611..... UOC:A13,A14,H13,H14	1
9	PAOZZ	5935008074109	19207	8741492	ADAPTER,CONNECTOR PART OF KIT P/N 5705611..... UOC:A13,A14,H13,H14	1
10	PAOZZ	5340002827537	96906	MS21333-41	CLAMP,LOOP PART OF KIT P/N 5705611. UOC:A13,A14,H13,H14	1
11	PAOZZ	5935009006281	96906	MS27147-1	ADAPTER,CONNECTOR 3-WAY,PART OF KIT P/N 5705611..... UOC:A13,A14,H13,H14	1
12	PAOZZ	5935008338561	19207	8338561	SHELL,ELECTRICAL CO PART OF KIT P/N 5705611..... UOC:A13,A14,H13,H14	1

END OF FIGURE

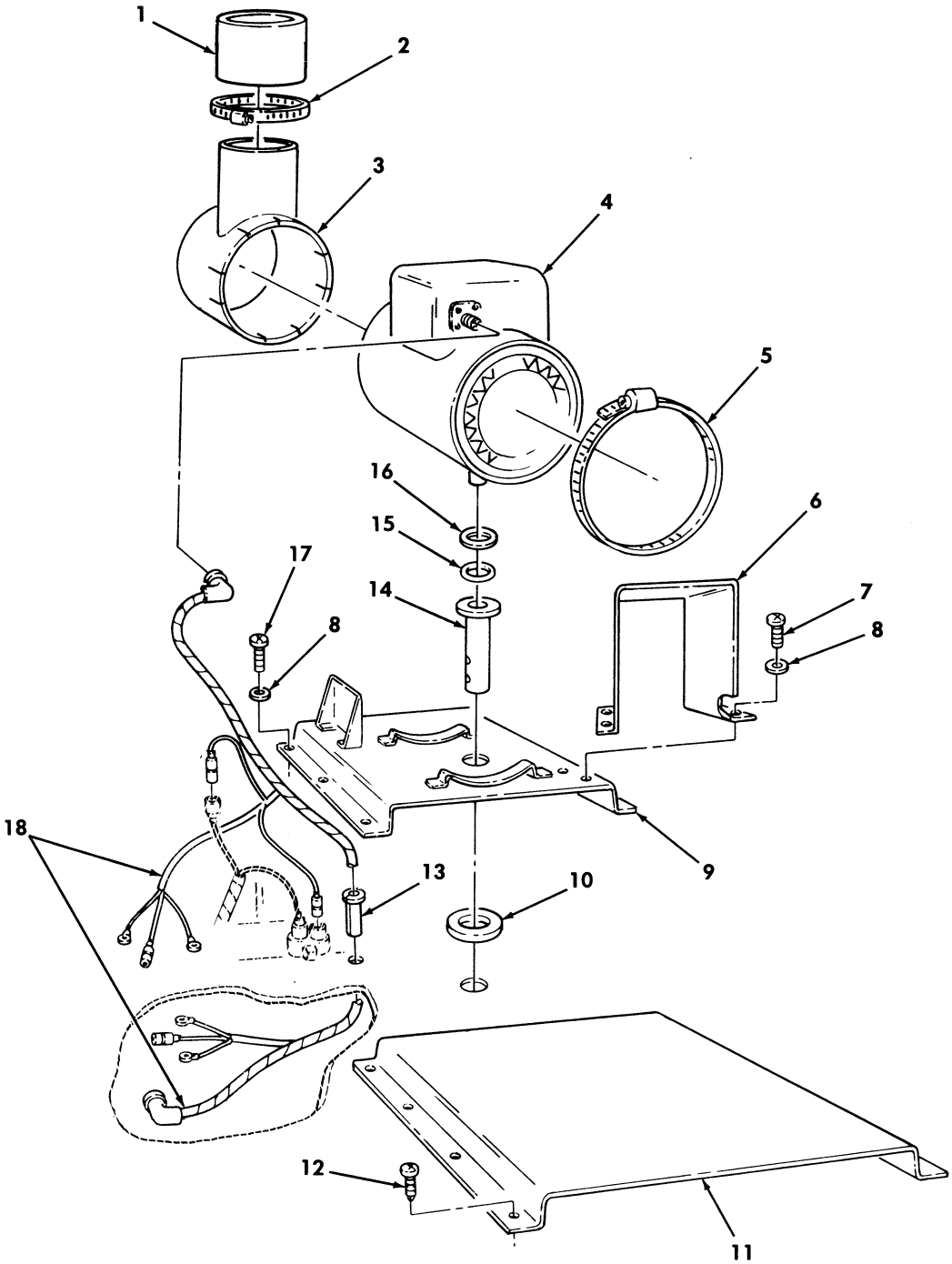

Figure 387. Winterization Kit, Heater and Exhaust Diverter Assembly.

(1) ITEM NO	(2) SMR CODE	(3) NSN	(4) CAGEC	(5) PART NUMBER	(6) DESCRIPTION AND USABLE ON CODES(UOC)	(7) QTY
					GROUP 3303 WINTERIZATION KITS	
					FIG. 387 WINTERIZATION KIT,HEATER AND EXHAUST DIVERTER ASSEMBLY	
1	PFOZZ	5340014507521	19207	12446982	SLEEVE,COUPLING,CLA PART OF KIT P/N 5705611..... UOC:A13,A14,H13,H14	1
2	PAOZZ	4730009086293	96906	MS35842-15	CLAMP,HOSE PART OF KIT P/N 5705611.. UOC:A13,A14,H13,H14	1
3	PFOZZ	4520013170929	19207	12342256	ELBOW,AIR CONDITION PART OF KIT P/N 5705611..... UOC:A13,A14,H13,H14	1
4	PAOFF	2540011943323	19207	11669898	HEATER,VEHICULAR,CO PART OF KIT P/N 5705611..... UOC:A13,A14,H13,H14	1
5	PAOZZ	4730009086294	34623	5578947	CLAMP,HOSE PART OF KIT P/N 5705611.. UOC:A13,A14,H13,H14	2
6	PAOZZ	2540013162597	34623	12342213	SHIELD,HEATER DUCT PART OF KIT P/N 5705611..... UOC:A13,A14,H13,H14	1
7	PAOZZ	5305002678952	80204	B1821BH025F050N	SCREW,CAP,HEXAGON H 1/4-28 X .50, PART OF KIT P/N 5705611..... UOC:A13,A14,H13,H14	4
8	PAOZZ	5310002092946	12204	120380	WASHER,LOCK 1/4,PART OF KIT P/N 5705611..... UOC:A13,A14,H13,H14	10
9	PFOZZ	4520013162585	19207	12342191	BASE,PLATE PART OF KIT P/N 5705611.. UOC:A13,A14,H13,H14	1
10	PAOZZ	5330013197302	19207	12356789	GASKET PART OF KIT P/N 5705611..... UOC:A13,A14,H13,H14	1
11	PAOZZ	5340013208662	19207	11609942	BRACKET,MULTIPLE AN PART OF KIT P/N 5705611..... UOC:A13,A14,H13,H14	1
12	PAOZZ	5325000149926	96906	MS35493-76	SCREW,WOOD #10 X .75,PART OF KIT P/N 5705611..... UOC:A13,A14,H13,H14	8
13	PAOZZ	5325011757442	19207	12300715-1	GROMMET,NONMETALLIC PART OF KIT P/N 5705611..... UOC:A13,A14,H13,H14	1
14	PAOZZ	4710013171044	34623	12342276	TUBE ASSEMBLY,METAL PART OF KIT P/N 5705611..... UOC:A13,A14,H13,H14	1
15	PAOZZ	5331007700242	19207	7700242	O-RING PART OF KIT P/N 5705611..... UOC:A13,A14,H13,H14	1
16	PAOZZ	5310007700243	19207	7700243	WASHER,FLAT PART OF KIT P/N 5705611. UOC:A13,A14,H13,H14	1
17	PAOZZ	5305000680515	80204	B1821BH025F100N	SCREW,CAP,HEXAGON H 1/4-28 X 1.00, PART OF KIT P/N 5705611..... UOC:A13,A14,H13,H14	6
18	PFOZZ	6150013246355	19207	12342193	CABLE ASSEMBLY,SPEC PART OF KIT P/N 5705611..... UOC:A13,A14,H13,H14	1

END OF FIGURE

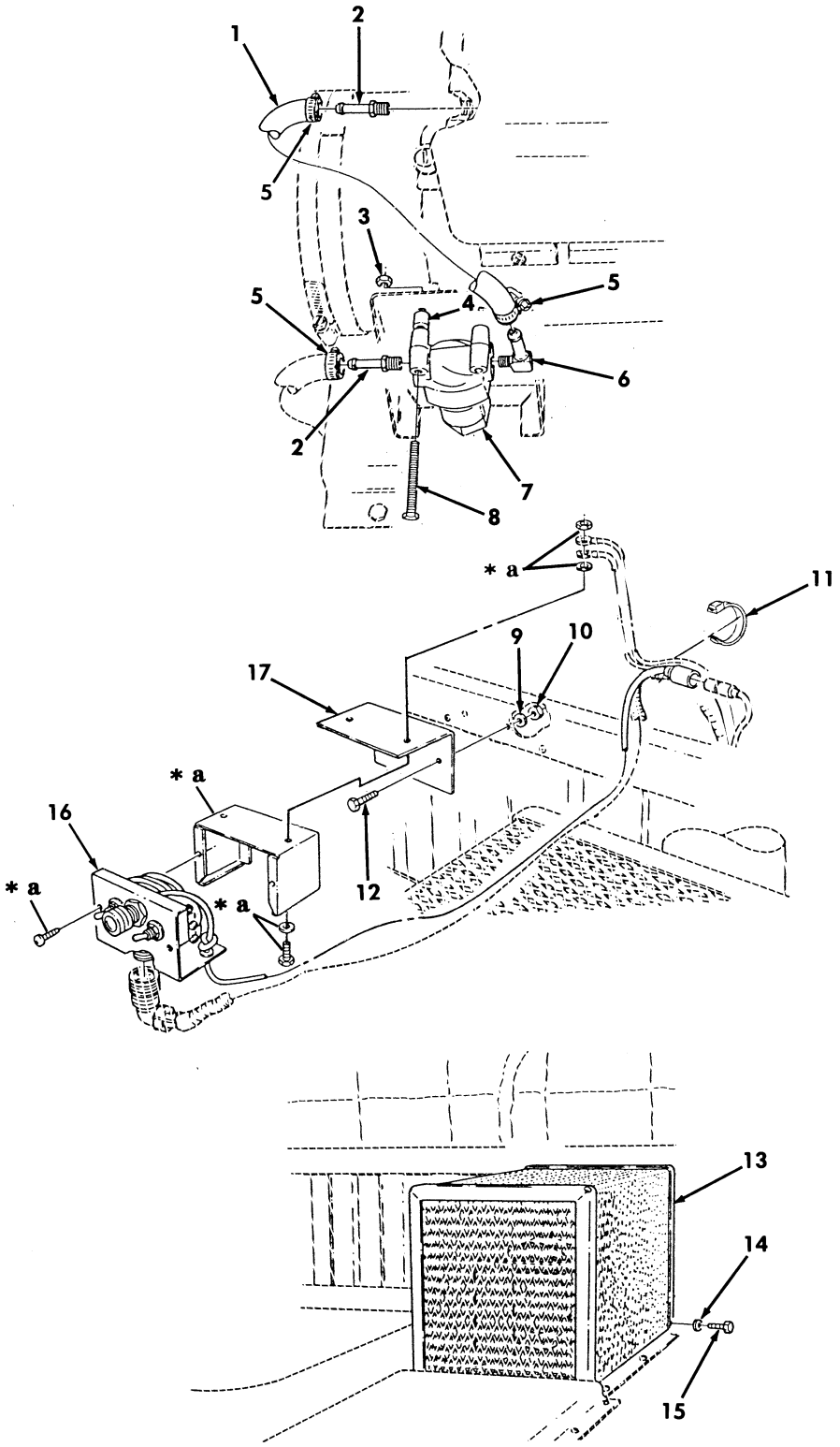

* a PART OF ITEM 16

Figure 388. Winterization Kit, Control Box, Filter, and Cover Assembly.

(1) ITEM NO	(2) SMR CODE	(3) NSN	(4) CAGEC	(5) PART NUMBER	(6) DESCRIPTION AND USABLE ON CODES(UOC)	(7) QTY
					GROUP 3303 WINTERIZATION KITS	
					FIG. 388 WINTERIZATION KIT,CONTROL BOX,FILTER,AND COVER ASSEMBLY	
1	MOOZZ		19207	12338553-2	HOSE,NONMETALLIC MAKE FROM HOSE,P/N 12338553,14 INCHES LONG,PART OF KIT P/N 5705611..... UOC:A13,A14,H13,H14	1
2	PAOZZ	4730013575651	81343	5-2 430160C	ADAPTER,STRAIGHT,PI PART OF KIT P/N 5705611..... UOC:A13,A14,H13,H14	2
3	PAOZZ	5310008775797	96906	MS21044N3	NUT,SELF-LOCKING,HE #10-32,PART OF KIT P/N 5705611..... UOC:A13,A14,H13,H14	2
4	PAOZZ	5365013182066	19207	8359764	SPACER,SLEEVE PART OF KIT P/N 5705611..... UOC:A13,A14,H13,H14	2
5	PAOZZ	4730002782523	88907	B54-32780	CLAMP,HOSE PART OF KIT P/N 5705611.. UOC:A13,A14,H13,H14	3
6	PAOZZ	4730013486231	81343	5-2 430260	ELBOW PART OF KIT P/N 5705611..... UOC:A13,A14,H13,H14	1
7	PAOZZ	2910000253493	96906	MS51085-1	FILTER,FLUID PART OF KIT P/N 5705611 UOC:A13,A14,H13,H14	1
8	PAOZZ	5305011204363	54132	9415779	SCREW,CAP,HEXAGON H #10-32 X 2.00 PART OF KIT P/N 5705611..... UOC:A13,A14,H13,H14	2
9	PAOZZ	5310008094058	96906	MS27183-10	WASHER,FLAT 1/4,PART OF KIT P/N 5705611..... UOC:A13,A14,H13,H14	2
10	PAOZZ	5310009359022	96906	MS51943-32	NUT,SELF-LOCKING,HE 1/4-28,PART OF KIT P/N 5705611..... UOC:A13,A14,H13,H14	2
11	PAOZZ	5975001338687	96906	MS3367-5-0	STRAP,TIEDOWN,ELECT PART OF KIT P/N 5705611..... UOC:A13,A14,H13,H14	1
12	PAOZZ	5305002678953	80204	B1821BH025F063N	SCREW,CAP,HEXAGON H 1/4-28 X .625 PART OF KIT P/N 5705611..... UOC:A13,A14,H13,H14	2
13	PAOZZ	2540013208918	19207	12342189	SHIELD,HEATER DUCT PART OF KIT P/N 5705611..... UOC:A13,A14,H13,H14	1
14	PAOZZ	5310001941483	96906	MS35333-44	WASHER,LOCK 1/4,PART OF KIT P/N 5705611..... UOC:A13,A14,H13,H14	4
15	PAOZZ	5306000680513	80204	B1821BH025F075N	BOLT,MACHINE 1/4-28 X .75,PART OF KIT P/N 5705611..... UOC:A13,A14,H13,H14	4
16	PAOZZ	2540011256154	19207	11669705	CONTROL BOX PART OF KIT P/N 5705611. UOC:A13,A14,H13,H14	1
17	PFOZZ	5340013172675	19207	12342260	BRACKET,ANGLE PART PF KIT P/N 5705611..... UOC:A13,A14,H13,H14	1

END OF FIGURE

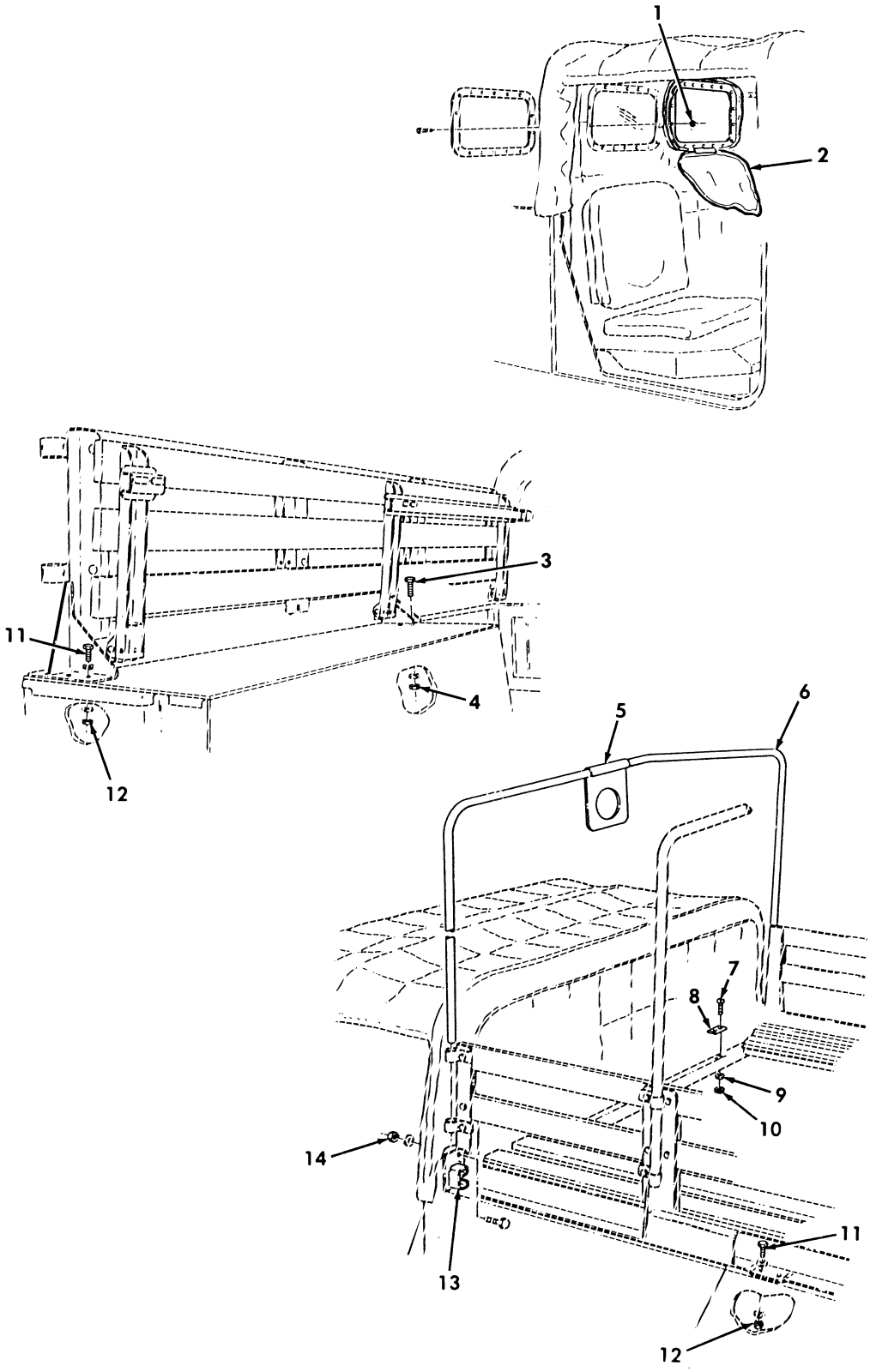

Figure 389. Seat Support Assemblies and Mounting Hardware.

(1) ITEM NO	(2) SMR CODE	(3) NSN	(4) CAGEC	(5) PART NUMBER	(6) DESCRIPTION AND USABLE ON CODES(UOC)	(7) QTY
					GROUP 3303 WINTERIZATION KITS	
					FIG. 389 SEAT SUPPORT ASSEMBLIES AND MOUNTING HARDWARE	
1	PAOZZ	5310009416019	96906	MS21083N08	NUT,SELF-LOCKING,HE #10-24 PART OF KIT P/N 5705611..... UOC:A13,A14,H13,H14	36
2	PAOZZ	2540001042889	19207	11609693-1	CURTAIN,VEHICULAR,B PART OF KIT P/N 5705611..... UOC:A13,A14,H13,H14	2
3	PFOZZ	5305000712056	80204	B1821BH044C175N	SCREW,CAP,HEXAGON H 7/16-14 X 1.75 PART OF KIT P/N 5705611..... UOC:A13,A14,H13,H14	4
4	PAOZZ	5310013185237	24617	9419456	NUT,SELF-LOCKING,HE 7/16-14,PART OF KIT P/N 5705611..... UOC:A13,A14,H13,H14	4
5	PFOZZ	5340013177501	19207	12342266	BRACKET,MOUNTING PART OF KIT P/N 5705611..... UOC:A13,A14,H13,H14	1
6	PFOZZ	2540011996760	34623	5581331	BOW,VEHICULAR TOP PART OF KIT P/N 5705611..... UOC:A13,A14,H13,H14	3
7	PFOZZ	5305009932457	96906	MS35207-284	SCREW,MACHINE 1/4-28 X 1.25,PART OF KIT P/N 5705611..... UOC:A13,A14,H13,H14	4
8	PAOZZ	2510013160216	19207	12342166	BLOCK,PLYWOOD PART OF KIT P/N 5705611..... UOC:A13,A14,H13,H14	2
9	PFOZZ	5310008094058	96906	MS27183-10	WASHER,FLAT 1/4,PART OF KIT P/N 5705611..... UOC:A13,A14,H13,H14	4
10	PAOZZ	5310004838791	96906	MS17829-4F	NUT,SELF-LOCKING,HE 1/4-28,PART OF KIT P/N 5705611..... UOC:A13,A14,H13,H14	4
11	PAOZZ	5305000712509	80204	B1821BH025C150N	SCREW,CAP,HEXAGON H 1/4-20 X 1.50 PART OF KIT P/N 5705611..... UOC:A13,A14,H13,H14	18
12	PAOZZ	5310010666759	72962	21NE-040	NUT,SELF-LOCKING,HE 1/4-20,PART OF KIT P/N 5705611..... UOC:A13,A14,H13,H14	18
13	PAOZZ	2590013170534	34623	12342175	BRACKET,VEHICULAR C R.H.,PART OF KIT P/N 5705611..... UOC:A13,A14,H13,H14	1
13	PAOZZ	2590013170535	34623	12342264	BRACKET,VEHICULAR C L.H.,PART OF KIT P/N 5705611..... UOC:A13,A14,H13,H14	1
14	PAOZZ	5310002416658	96906	MS51943-34	NUT,SELF-LOCKING,HE 5/16-24,PART OF KIT P/N 5705611..... UOC:A13,A14,H13,H14	6

END OF FIGURE

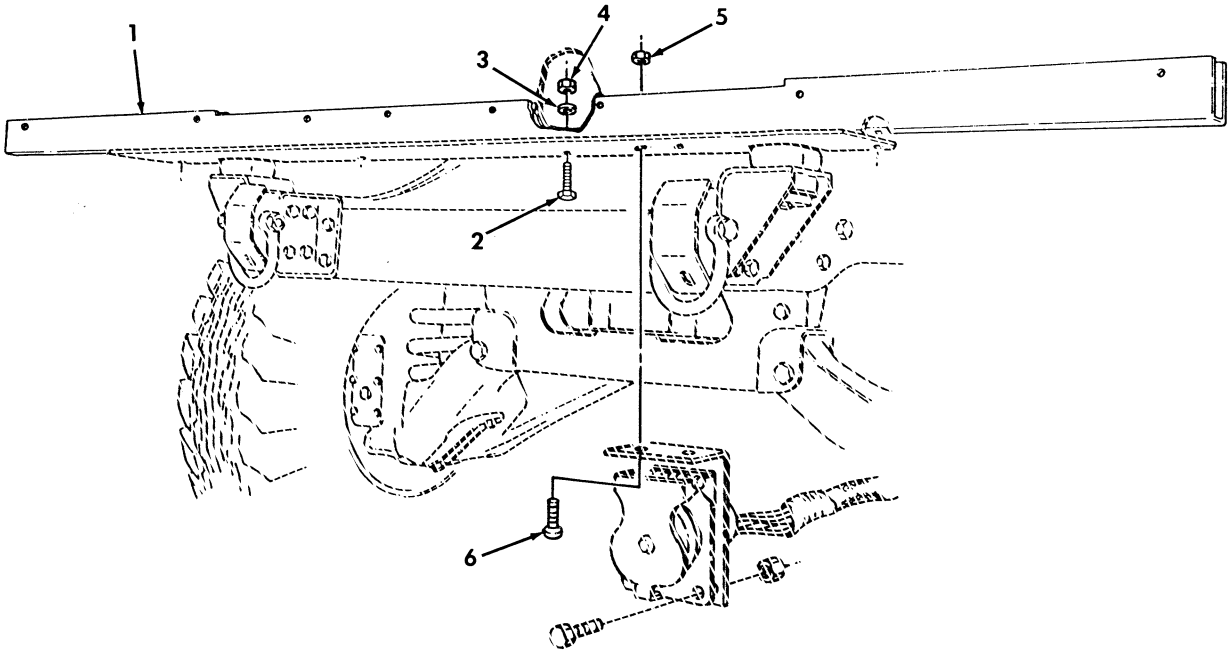

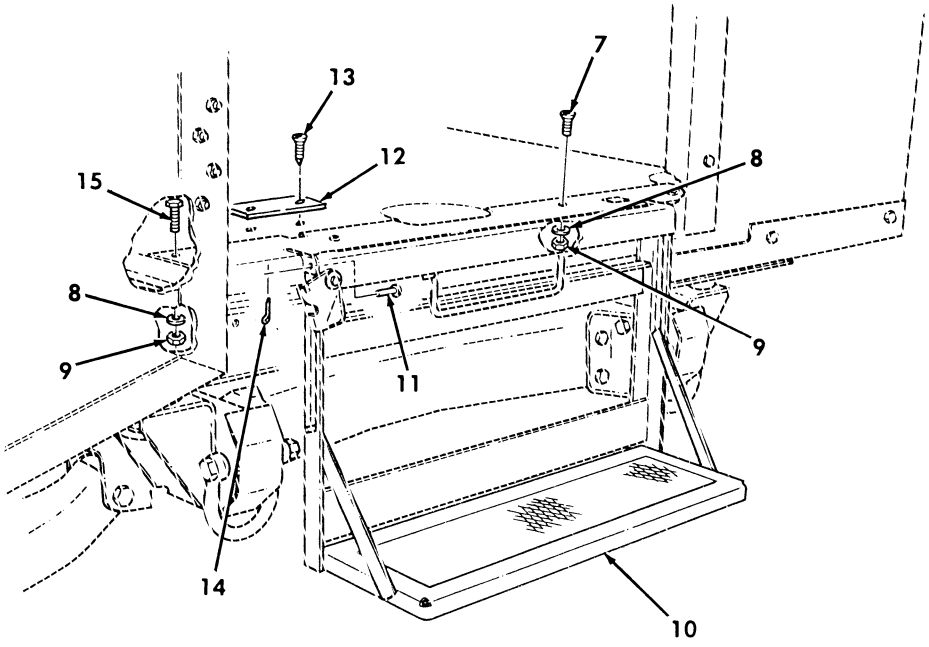

Figure 390. Step Assembly, Support Assembly, and Mounting Hardware.

(1) ITEM NO	(2) SMR CODE	(3) NSN	(4) CAGEC	(5) PART NUMBER	(6) DESCRIPTION AND USABLE ON CODES(UOC)	(7) QTY
					GROUP 3303 WINTERIZATION KITS	
					FIG. 390 STEP ASSEMBLY,SUPPORT ASSEMBLY,AND MOUNTING HARDWARE	
1	PFOZZ	2540013170820	34623	12342332	SUPPORT ASSEMBLY,BO PART OF KIT P/N 5705611..... UOC:A13,A14,H13,H14	1
2	PAOZZ	5305007195221	80204	B1821BH050F150N	SCREW,CAP,HEXAGON H 1/2-20 X 1.50, PART OF KIT P/N 5705611..... UOC:A13,A14,H13,H14	4
3	PAOZZ	5310008095998	96906	MS27183-18	WASHER,FLAT 1/2 PART OF KIT P/N 5705611..... UOC:A13,A14,H13,H14	4
4	PAOZZ	5310007749073	72582	190171	NUT,SELF-LOCKING,CA 1/2-20 PART OF KIT P/N 5705611..... UOC:A13,A14,H13,H14	4
5	PAOZZ	5310008140673	96906	MS51943-33	NUT,SELF-LOCKING,HE 5/16-18 PART OF KIT P/N 5705611..... UOC:A13,A14,H13,H14	2
6	PAOZZ	5306002264829	80204	B1821BH031C125N	BOLT,MACHINE 5/16-18 X 1.25 PART OF KIT P/N 5705611..... UOC:A13,A14,H13,H14	2
7	PAOZZ	5305009017250	96906	MS24693-S350	SCREW,MACHINE 3/8-24 X 1.25,PART OF KIT P/N 5705611..... UOC:A13,A14,H13,H14	2
8	PAOZZ	5310001670821	61465	M2025103	WASHER,FLAT 3/8,PART OF KIT P/N 5705611..... UOC:A13,A14,H13,H14	4
9	PAOZZ	5310010583353	72582	192481	NUT,SELF-LOCKING,HE 3/8-24,PART OF KIT P/N 5705611..... UOC:A13,A14,H13,H14	4
10	PAOZZ	2540013171024	34623	12342301	LADDER,VEHICLE BOAR PART OF KIT P/N 5705611..... UOC:A13,A14,H13,H14	1
11	PAOZZ	5315008903461	96906	MS20392-6C17	PIN,STRAIGHT,HEADER 7/16 X .531, PART OF KIT P/N 5705611..... UOC:A13,A14,H13,H14	2
12	PAOZZ	5340013942409	19207	12342903	PLATE,MOUNTING PART OF KIT P/N 5705611..... UOC:A13,A14,H13,H14	1
13	PAOZZ	5305009026643	96906	MS35492-76	SCREW,WOOD #10 X .75,PART OF KIT P/N 5705611..... UOC:A13,A14,H13,H14	2
14	PAOZZ	5315008423044	96906	MS24665-283	PIN,COTTER 1/16,PART OF KIT P/N 5705611..... UOC:A13,A14,H13,H14	2
15	PAOZZ	5305002693242	80204	B1821BH038F200N	SCREW,CAP,HEXAGON H 3/8-24 X 2.00, PART OF KIT P/N 5705611..... UOC:A13,A14,H13,H14	2

END OF FIGURE

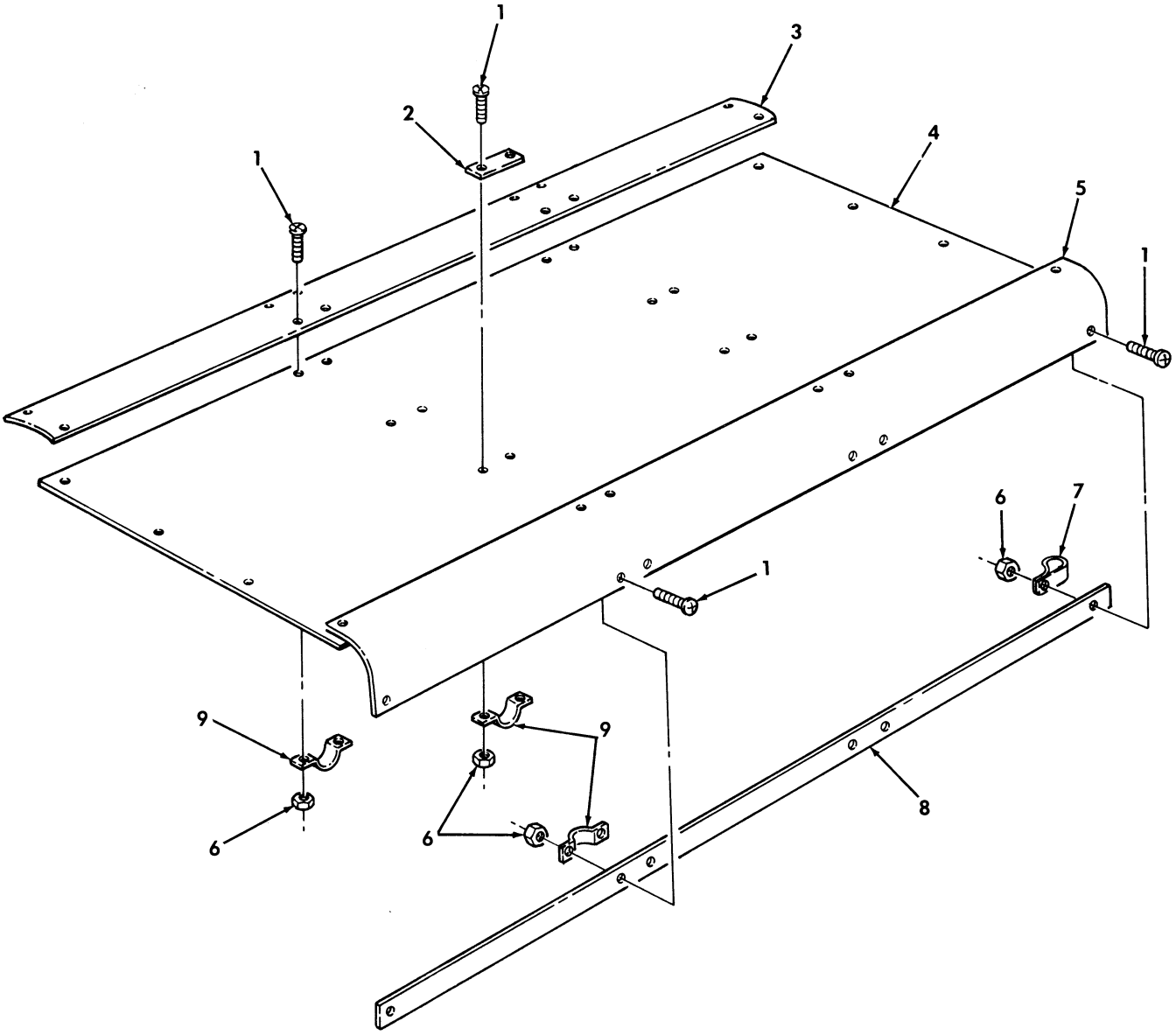

Figure 391. Top Plate Support and Attaching Hardware.

(1) ITEM NO	(2) SMR CODE	(3) NSN	(4) CAGEC	(5) PART NUMBER	(6) DESCRIPTION AND USABLE ON CODES(UOC)	(7) QTY
					GROUP 3303 WINTERIZATION KITS	
					FIG. 391 TOP PLATE SUPPORT AND ATTACHING HARDWARE	
1	PAOZZ	5305009932460	96906	MS35207-282	SCREW,MACHINE 1/4-28 X .875 PART OF KIT P/N 5705611..... UOC:A13,A14,H13,H14	50
2	PAOZZ	5340013182040	19207	12342218	PLATE,MENDING PART OF KIT P/N 5705611..... UOC:A13,A14,H13,H14	8
3	KFFZZ		19207	12342226	PLATE,SEAM PART OF KIT P/N 5705611.. UOC:A13,A14,H13,H14	1
4	KFFZZ		19207	12342220-1	SUPPORT PART OF KIT P/N 5705611..... UOC:A13,A14,H13,H14	1
5	KFFZZ		19207	12342221	SUPPORT PART OF KIT P/N 5705611..... UOC:A13,A14,H13,H14	1
6	PAOZZ	5310013174022	24617	9413553	NUT,PLAIN,EXTENDED 1/4-28 PART OF KIT P/N 5705611..... UOC:A13,A14,H13,H14	50
7	PAOZZ	5340013179086	19207	12342234	CLAMP,LOOP PART OF KIT P/N 5705611.. UOC:A13,A14,H13,H14	10
8	KFFZZ		19207	12342220-2	SUPPORT PART OF KIT P/N 5705611..... UOC:A13,A14,H13,H14	1
9	PAOZZ	5340013199426	19207	12342235	STRAP,RETAINING,PART OF KIT P/N 5705611..... UOC:A13,A14,H13,H14	20

END OF FIGURE

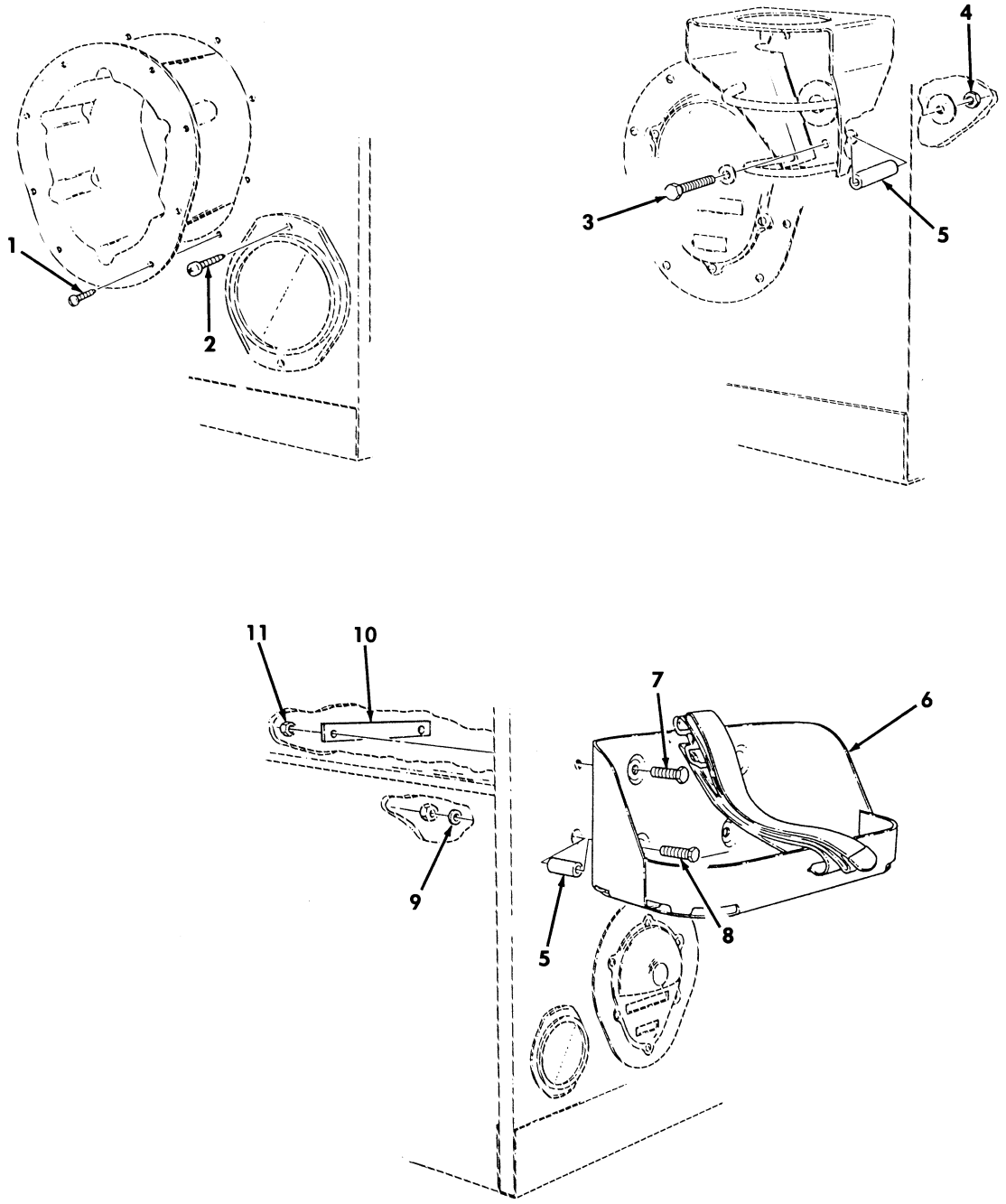

Figure 392. Fuel Can Bracket, Antenna Mounting Bracket, and Composite Light Housing Mounting Hardware.

(1) ITEM NO	(2) SMR CODE	(3) NSN	(4) CAGEC	(5) PART NUMBER	(6) DESCRIPTION AND USABLE ON CODES(UOC)	(7) QTY
					GROUP 3303 WINTERIZATION KITS	
					FIG. 392 FUEL CAN BRACKET,ANTENNA MOUNTING BRACKET,AND COMPOSITE LIGHT HOUSING MOUNTING HARDWARE	
1	PAOZZ	5305000149926	96906	MS35493-76	SCREW,WOOD #10 X .875,PART OF KIT 5705611..... UOC:A13,A14,H13,H14	16
2	PAOZZ	5305013159512	96906	MS35495-124	SCREW,WOOD #14 X .75,PART OF KIT P/N 5705611..... UOC:A13,A14,H13,H14	4
3	PAOZZ	5306002259097	96906	MS90726-42	BOLT,MACHINE 5/16-24 X 2.50,PART OF KIT P/N 5705611..... UOC:A13,A14,H13,H14	3
4	PAOZZ	5310000880553	24617	190139	NUT,SELF-LOCKING,HE 5/16-24,PART OF KIT P/N 5705611..... UOC:A13,A14,H13,H14	3
5	PAOZZ	5365013168985	19207	12342237	SPACER,SLEEVE PART OF KIT P/N 5705611..... UOC:A13,A14,H13,H14	5
6	PAOZZ	2590004736331	07860	C21452	BRACKET ASSEMBLY,LI PART OF KIT P/N 5705611..... UOC:A13,A14,H13,H14	1
7	PAOZZ	5305009146131	96906	MS18153-63	SCREW,CAP,HEXAGON H 3/8-24 X 1.75, PART OF KIT P/N 5705611..... UOC:A13,A14,H13,H14	2
8	PAOZZ	5305002692811	96906	MS90726-67	SCREW,CAP,HEXAGON H 3/8-24 X 2.50, PART OF KIT P/N 5705611..... UOC:A13,A14,H13,H14	2
9	PAOZZ	5310000806004	96906	MS27183-14	WASHER,FLAT 3/8,PART OF KIT P/N 5705611..... UOC:A13,A14,H13,H14	2
10	PAOZZ	5340013182041	19207	12342219	PLATE,MENDING PART OF KIT P/N 5705611..... UOC:A13,A14,H13,H14	1
11	PAOZZ	5310010583353	72582	192481	NUT,SELF-LOCKING,HE 3/8-24,PART OF KIT P/N 5705611..... UOC:A13,A14,H13,H14	4

END OF FIGURE

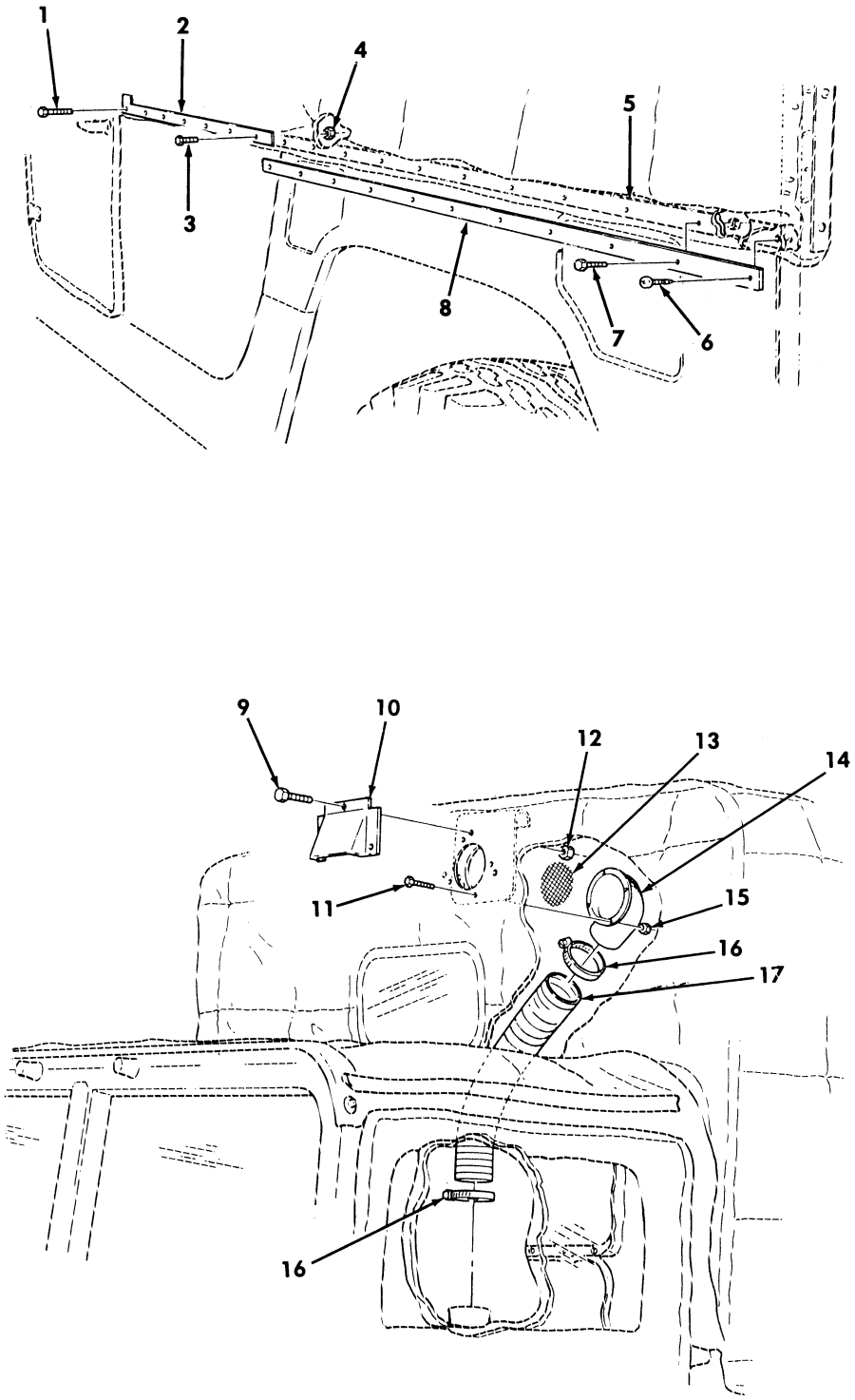

Figure 393. Mounting Plates and Ventilator Exhaust Ducting.

(1) ITEM NO	(2) SMR CODE	(3) NSN	(4) CAGEC	(5) PART NUMBER	(6) DESCRIPTION AND USABLE ON CODES(UOC)	(7) QTY
					GROUP 3303 WINTERIZATION KITS	
					FIG. 393 MOUNTING PLATES AND VENTILATOR EXHAUST DUCTING	
1	PAOZZ	5305000712237	96906	MS90725-14	SCREW,CAP,HEXAGON H 1/4-20 X 2.00, PART OF KIT P/N 5705611..... UOC:A13,A14,H13,H14	1
2	PAOZZ	5340013202060	19207	12342201	PLATE,MOUNTING PART OF KIT P/N 5705611..... UOC:A13,A14,H13,H14	1
3	PAOZZ	5305000712056	80204	B1821BH044C175N	SCREW,CAP,HEXAGON H 1/4-20 X 1.75, PART OF KIT P/N 5705611..... UOC:A13,A14,H13,H14	6
4	PAOZZ	5310010128962	24617	9416918	NUT,PLAIN,EXTENDED 1/4-20,PART OF KIT P/N 5705611..... UOC:A13,A14,H13,H14	17
5	PAOZZ	5330013175392	19207	12342248	RUBBER,STRIP PART OF KIT P/N 5705611 UOC:A13,A14,H13,H14	1
6	PAOZZ	5305013170409	96906	MS35495-127	SCREW,WOOD #14 X 1.25,PART OF KIT P/N 5705611..... UOC:A13,A14,H13,H14	1
7	PAOZZ	5305000680502	96906	MS90725-6	SCREW,CAP,HEXAGON H 1/4-20 X .75, PART OF KIT P/N 5705611..... UOC:A13,A14,H13,H14	10
8	PAOZZ	2590013174854	19207	12342173	MOLDING,METAL PART OF KIT P/N 5705611..... UOC:A13,A14,H13,H14	1
9	PAOZZ	5305000680515	80204	B1821BH025F100N	SCREW,CAP,HEXAGON H 1/4-28 X 1.00, PART OF KIT P/N 5705611..... UOC:A13,A14,H13,H14	3
10	PFOZZ	2540013162588	34623	7390378	VENTILATOR,AIR,CIRC PART OF KIT P/N 5705611..... UOC:A13,A14,H13,H14	1
11	PAOZZ	5305009896265	96906	MS35207-262	SCREW,MACHINE #10-32 X .375,PART OF KIT P/N 5705611..... UOC:A13,A14,H13,H14	4
12	PAOZZ	5310009359022	96906	MS51943-32	NUT,SELF-LOCKING,HE 1/4-28,PART OF KIT P/N 5705611..... UOC:A13,A14,H13,H14	3
13	PAOZZ	4730005671630	78358	484487	STRAINER ELEMENT,SE PART OF KIT P/N 5705611..... UOC:A13,A14,H13,H14	1
14	PFOZZ	2540001778108	19207	7951057	ADAPTER,VEHICLE STO PART OF KIT P/N 5705611..... UOC:A13,A14,H13,H14	1
15	PAOZZ	5310008775797	96906	MS21044N3	NUT,SELF-LOCKING,HE #10-32,PART OF KIT P/N 5705611..... UOC:A13,A14,H13,H14	4
16	PAOZZ	4730009086293	66295	60HS	CLAMP.HOSE PART OF KIT P/N 5705611.. UOC:A13,A14,H13,H14	2
17	PAOZZ	4720014764656	19207	12342261-1	HOSE,AIR DUCT 44 INCHES LONG PART OF KIT P/N 5705611..... UOC:A13,A14,H13,H14	1

END OF FIGURE

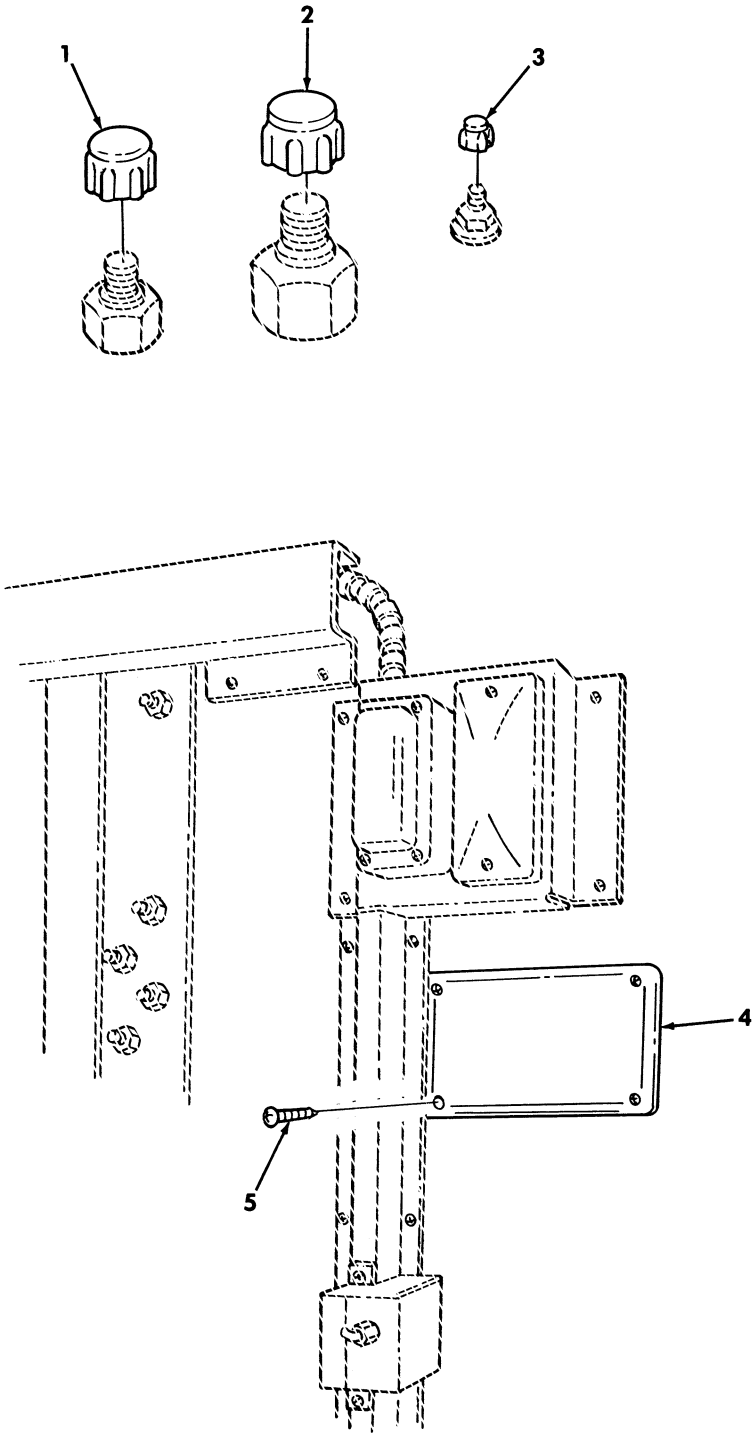

Figure 394. Screw Caps and Winterization Instruction Plate.

(1) ITEM NO	(2) SMR CODE	(3) NSN	(4) CAGEC	(5) PART NUMBER	(6) DESCRIPTION AND USABLE ON CODES(UOC)	(7) QTY
					GROUP 3303 WINTERIZATION KITS	
					FIG. 394 SCREW CAPS AND WINTERIZATION INSTRUCTION PLATE	
1	PAOZZ	5340007274774	81349	M5501/11-F5	CAP,PROTECTIVE,DUST PART OF KIT P/N 5705611..... UOC:A13,A14,H13,H14	23
2	PAOZZ	5340011679314	81349	M5501/11-F7	CAP,PROTECTIVE,DUST PART OF KIT P/N 5705611..... UOC:A13,A14,H13,H14	2
3	PAOZZ	5340011744894	81349	M5501/11-F1	CAP.PROTECTIVE,DUST PART OF KIT P/N 5705611..... UOC:A13,A14,H13,H14	52
4	PFOZZ	9905010327002	19207	10896651	PLATE,INSTRUCTION PART OF KIT P/N 5705611..... UOC:A13,A14,H13,H14	1
5	PAOZZ	5305009012099	96906	MS35493-51	SCREW,WOOD #8 X .50,PART OF KIT P/N 5705611..... UOC:A13,A14,H13,H14	4

END OF FIGURE

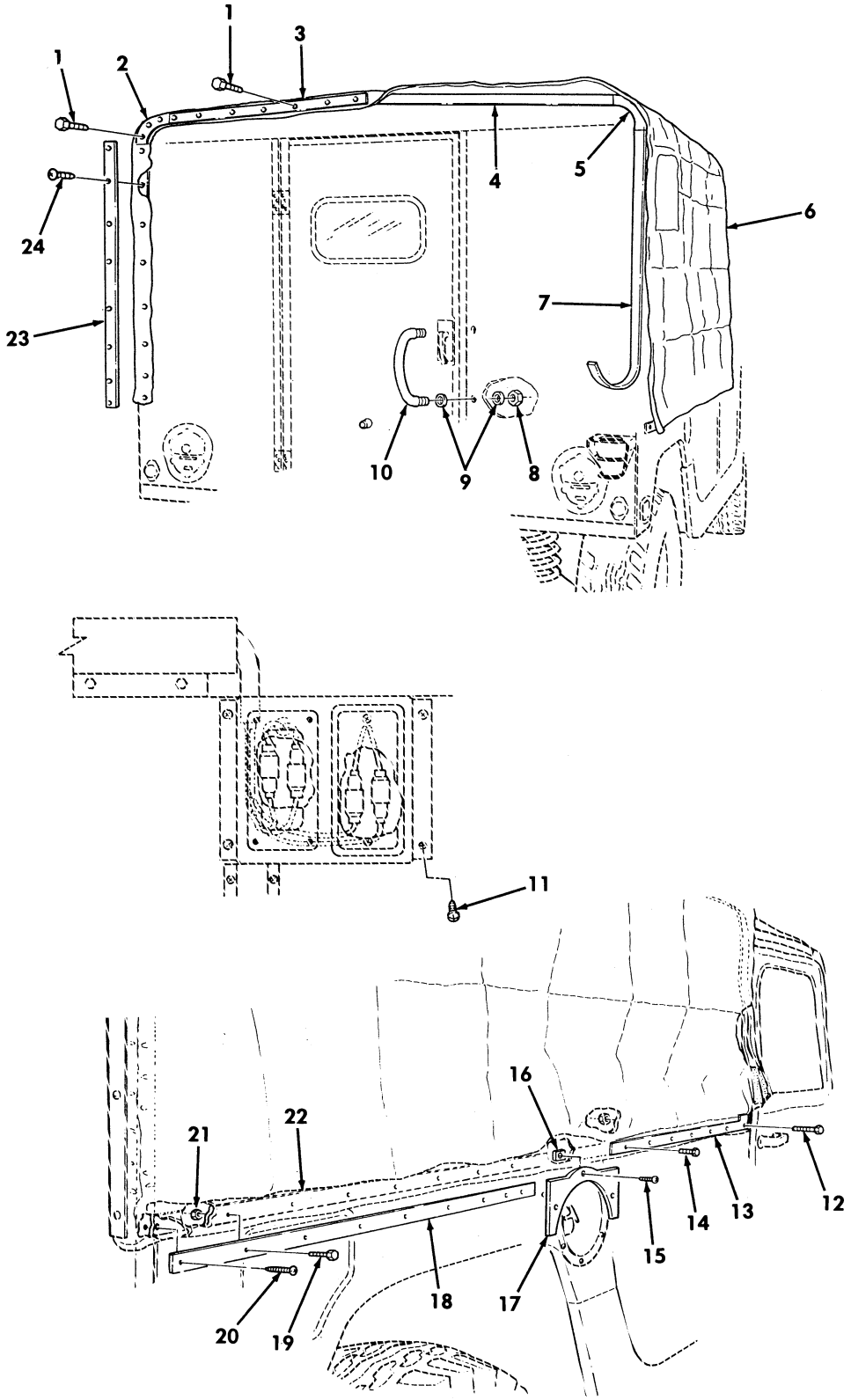

Figure 395. Top Cover Assembly and Mounting Hardware.

(1) ITEM NO	(2) SMR CODE	(3) NSN	(4) CAGEC	(5) PART NUMBER	(6) DESCRIPTION AND USABLE ON CODES(UOC)	(7) QTY
					GROUP 3303 WINTERIZATION KITS	
					FIG. 395 TOP COVER ASSEMBLY AND MOUNTING HARDWARE	
1	PAOZZ	5305004324253	96906	MS51861-67	SCREW,TAPPING 1/4-14 X .75,PART OF KIT P/N 5705611..... UOC:A13,A14,H13,H14	20
2	PAOZZ	2590013173952	19207	12342195	MOLDING,METAL PART OF KIT P/N 5705611..... UOC:A13,A14,H13,H14	2
3	PAOZZ	2590013178292	19207	12342216	MOLDING,METAL PART OF KIT P/N 5705611..... UOC:A13,A14,H13,H14	2
4	PAOZZ	5330013175393	19207	12342345	RUBBER STRIP PART OF KIT P/N 5705611 UOC:A13,A14,H13,H14	2
5	PAOZZ	5330013181998	19207	12342343	SEAL,NONMETALLIC ST PART OF KIT P/N 5705611..... UOC:A13,A14,H13,H14	2
6	PAOFF	2540013153762	19207	12342187	COVER,FITTED,VEHICU PART OF KIT P/N 5705611..... UOC:A13,A14,H13,H14	1
7	PAOZZ	5330013189780	19207	12342344	RUBBER,STRIP PART OF KIT P/N 5705611 UOC:A13,A14,H13,H14	2
8	PAOZZ	5310013178164	24617	272739	NUT,SELF-LOCKING,HE 5/8-18,PART OF KIT P/N 5705611..... UOC:A13,A14,H13,H14	2
9	PAOZZ	5310004986675	10001	1788116	WASHER,FLAT 5/8,PART OF KIT P/N 5705611..... UOC:A13,A14,H13,H14	4
10	PAOZZ	2540013174289	34623	11602903	HANDLE,DOOR PART OF KIT P/N 5705611 UOC:A13,A14,H13,H14	1
11	PAOZZ	5305000567879	96906	MS35493-74	SCREW,WOOD #10 X .50,PART OF KIT P/N 5705611..... UOC:A13,A14,H13,H14	8
12	PAOZZ	5305000712237	96906	MS90725-14	SCREW,CAP,HEXAGON H 1/4-20 X 2.00, PART OF KIT P/N 5705611..... UOC:A13,A14,H13,H14	1
13	PAOZZ	5340013202060	19207	12342201	PLATE,MOUNTING PART OF KIT P/N 5705611..... UOC:A13,A14,H13,H14	1
14	PAOZZ	5305000712056	80204	B1821BH044C175N	SCREW,CAP,HEXAGON H 7/16-14 X 1.75 PART OF KIT P/N 5705611..... UOC:A13,A14,H13,H14	6
15	PAOZZ	5305013159524	96906	MS51850-69	SCREW,TAPPING #10 X 1.25,PART OF KIT P/N 5705611..... UOC:A13,A14,H13,H14	3
16	PAOZZ	5310011101145	96906	MS90724-39	NUT,SHEET SPRING #10-39,PART OF KIT P/N 5705611..... UOC:A13,A14,H13,H14	3
17	PAOZZ	2510013199384	19207	12342258	FRAME SECTION,STRUC PART OF KIT P/N 5705611..... UOC:A13,A14,H13,H14	1

(1) ITEM NO	(2) SMR CODE	(3) NSN	(4) CAGEC	(5) PART NUMBER	(6) DESCRIPTION AND USABLE ON CODES(UOC)	(7) QTY
18	PAOZZ	2590013174855	19207	12342185	MOLDING,METAL PART OF KIT P/N 5705611..... UOC:A13,A14,H13,H14	1
19	PAOZZ	5305000680502	96906	MS90725-6	SCREW,CAP,HEXAGON H 1/4-20 X .75 PART OF KIT P/N 5705611..... UOC:A13,A14,H13,H14	8
20	PAOZZ	5305013170409	96906	MS35489-127	SCREW,WOOD #14 X 1.25,PART OF KIT P/N 5705611..... UOC:A13,A14,H13,H14	1
21	PAOZZ	5310010128962	24617	9416918	NUT,PLAIN,EXTENDED 1/4-20,PART OF KIT P/N 5705611..... UOC:A13,A14,H13,H14	15
22	PAOZZ	5330013175392	19207	12342248	RUBBER STRIP PART OF KIT P/N 5705611 UOC:A13,A14,H13,H14	1
23	PAOZZ	2590013177561	34623	12342215	MOLDING,METAL PART OF KIT P/N 5705611..... UOC:A13,A14,H13,H14	2
24	PAOZZ	5305013159882	96906	MS35495-126	SCREW,WOOD #14 X 1.00,PART OF KIT P/N 5705611..... UOC:A13,A14,H13,H14	24

END OF FIGURE

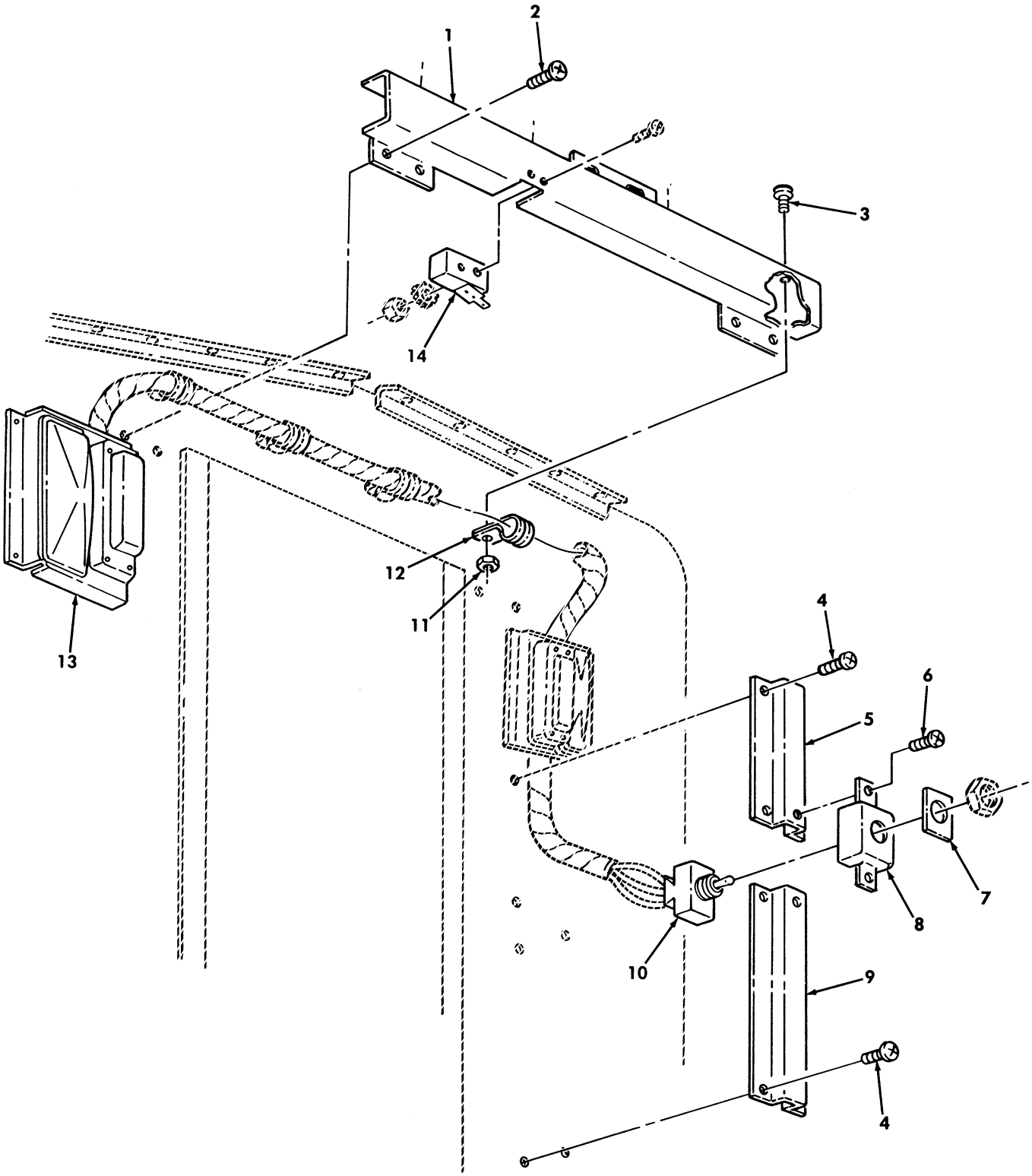

Figure 396. Wiring Harness Channel and Hardware.

(1) ITEM NO	(2) SMR CODE	(3) NSN	(4) CAGEC	(5) PART NUMBER	(6) DESCRIPTION AND USABLE ON CODES(UOC)	(7) QTY
					GROUP 3303 WINTERIZATION KITS	
					FIG. 396 WIRING HARNESS CHANNEL AND HARDWARE	
1	PFOZZ	2510013178258	19207	12342214	CHANNEL,BODY PART OF KIT P/N 5705611 UOC:A13,A14,H13,H14	1
2	PAOZZ	5305004324253	96906	MS51861-67	SCREW,TAPPING 1/4-14 X .75,PART OF KIT P/N 5705611..... UOC:A13,A14,H13,H14	6
3	PAOZZ	5305009897434	96906	MS35207-263	SCREW,MACHINE #10-32 X .50,PART OF KIT P/N 5705611..... UOC:A13,A14,H13,H14	4
4	PAOZZ	5305000567879	96906	MS35493-74	SCREW,WOOD #10 X .50,PART OF KIT P/N 5705611..... UOC:A13,A14,H13,H14	14
5	PFOZZ	2540013173350	19207	12342199	CHANNEL,LIFT,VEHICL PART OF KIT P/N 5705611..... UOC:A13,A14,H13,H14	1
6	PAOZZ	5305009906444	96906	MS35207-261	SCREW,MACHINE #10-32 X .375,PART OF KIT P/N 5705611..... UOC:A13,A14,H13,H14	2
7	PFOZZ	9905013240886	19207	12342194	PLATE,INSTRUCTION PART OF KIT P/N 5705611..... UOC:A13,A14,H13,H14	1
8	PFOZZ	5975013226373	19207	12342198	JUNCTION BOX PART OF KIT P/N 5705611 UOC:A13,A14,H13,H14	1
9	PFOZZ	2540013162697	34623	12342200	CHANNEL,LIFT,VEHICL PART OF KIT P/N 5705611..... UOC:A13,A14,H13,H14	1
10	PAOZZ	5930006814727	96906	MS24523-21	SWITCH,TOGGLE PART OF KIT P/N 5705611..... UOC:A13,A14,H13,H14	1
11	PAOZZ	5310008775797	96906	MS21044N3	NUT,SELF-LOCKING,HE #10-32,PART OF KIT P/N 5705611..... UOC:A13,A14,H13,H14	4
12	PAOZZ	5340007647051	96906	MS21333-69	CLAMP,LOOP PART OF KIT P/N 5705611. UOC:A13,A14,H13,H14	4
13	PAOZZ	6220013230431	19207	12342403	STOP LIGHT-TAILLIGH PART OF KIT P/N 5705611..... UOC:A13,A14,H13,H14	2
14	PFOZZ	5930012663919	34623	5598011	SWITCH,SENSITIVE PART OF KIT P/N 5705611..... UOC:A13,A14,H13,H14	1

END OF FIGURE

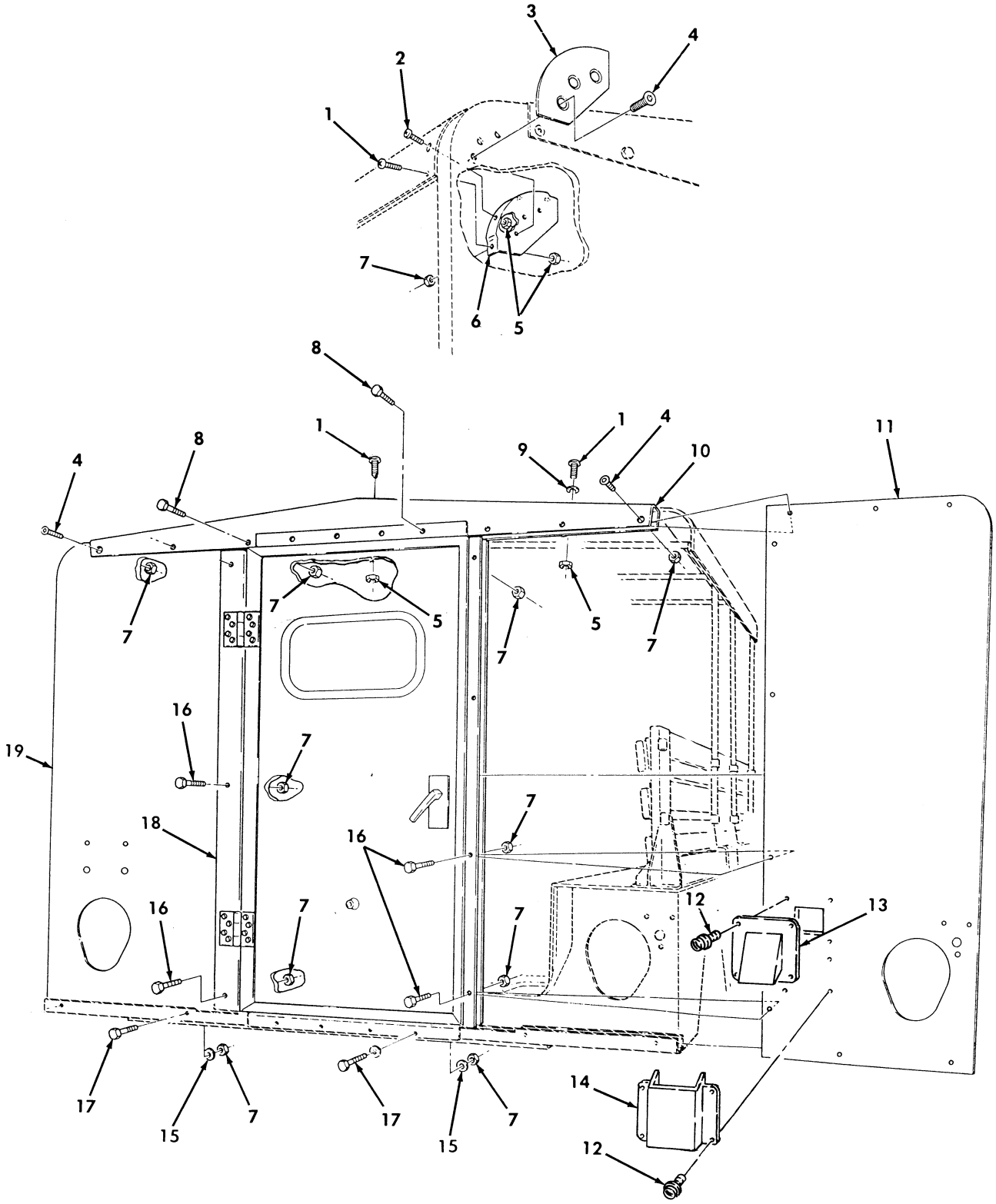

Figure 397. End Closures, Door Assembly, and Mounting Hardware.

(1) ITEM NO	(2) SMR CODE	(3) NSN	(4) CAGEC	(5) PART NUMBER	(6) DESCRIPTION AND USABLE ON CODES(UOC)	(7) QTY
					GROUP 3303 WINTERIZATION KITS	
					FIG. 397 END CLOSURES,DOOR ASSEMBLY, AND MOUNTING HARDWARE	
1	PAOZZ	5305009932460	96906	MS35207-282	SCREW,MACHINE 1/4-28 X .875,PART OF KIT P/N 5705611..... UOC:A13,A14,H13,H14	14
2	PAOZZ	5305009932738	96906	MS35207-280	SCREW,MACHINE 1/4-28 X .75,PART OF KIT P/N 5705611..... UOC:A13,A14,H13,H14	4
3	PAOZZ	5340013182180	19207	12342324	PLATE,MOUNTING PART OF KIT P/N 5705611..... UOC:A13,A14,H13,H14	2
4	PAOZZ	5305013159683	96906	MS35191-348	SCREW,MACHINE 1/2-20 X 2.00 PART OF KIT P/N 5705611..... UOC:A13,A14,H13,H14	8
5	PAOZZ	5310004838791	96906	MS17829-4F	NUT,SELF-LOCKING,HE 1/4-28 PART OF KIT P/N 5705611..... UOC:A13,A14,H13,H14	8
6	PAOZZ	5340013184893	19207	12342322	BRACKET,MOUNTING PART OF KIT P/N 5705611..... UOC:A13,A14,H13,H14	2
7	PAOZZ	5310007749073	72582	190171	NUT,SELF-LOCKING,CA 1/2-20 PART OF KIT P/N 5705611..... UOC:A13,A14,H13,H14	28
8	PAOZZ	5305007195239	96906	MS90727-116	SCREW,CAP,HEXAGON H 1/2-20 X 2.25, PART OF KIT P/N 5705611..... UOC:A13,A14,H13,H14	8
9	PAOZZ	5310008094058	96906	MS27183-10	WASHER,FLAT 1/4 PART OF KIT P/N 5705611..... UOC:A13,A14,H13,H14	8
10	PAFZZ	2510013195952	19207	12342317	FRAME,SECTION,STRUC PART OF KIT P/N 5705611..... UOC:A13,A14,H13,H14	1
11	KFFZZ		19207	12342223-2	CLOSURE END R.H. PART OF KIT P/N 5705611..... UOC:A13,A14,H13,H14	1
12	PAOZZ	5305013159882	96906	MS35495-126	SCREW,WOOD #14 X 1.00 PART OF KIT P/N 5705611..... UOC:A13,A14,H13,H14	8
13	PFOZZ	2540014767827	19207	12446983	VENTILATOR PART OF KIT P/N 5705611.. UOC:A13,A14,H13,H14	1
14	PFOZZ	2540014770242	19207	12446981	DIVERTER,LIGHT PART OF KIT P/N 5705611..... UOC:A13,A14,H13,H14	1
15	PAOZZ	5310008095998	96906	MS27183-18	WASHER,FLAT 1/2 PART OF KIT P/N 5705611..... UOC:A13,A14,H13,H14	12
16	PAOZZ	5305007195238	80204	B1821BH050F200N	SCREW,CAP,HEXAGON H 1/2-20 X 2.00 PART OF KIT P/N 5705611..... UOC:A13,A14,H13,H14	4

(1) ITEM NO	(2) SMR CODE	(3) NSN	(4) CAGEC	(5) PART NUMBER	(6) DESCRIPTION AND USABLE ON CODES(UOC)	(7) QTY
17	PAOZZ	5305007195241	80204	B1821BH050F275N	SCREW,CAP,HEXAGON H 1/2-20 X 2.75, PART OF KIT P/N 5705611..... UOC:A13,A14,H13,H14	8
18	PAOZZ	2510013144892	19207	12342330	DOOR,VEHICULAR PART OF KIT P/N 5705611..... UOC:A13,A14,H13,H14	1
19	KFFZZ		19207	12342223-1	CLOSURE END L.H. PART OF KIT P/N 5705611.....	1
KIT	PDFZZ	2540013140142	19207	5705611	WINTERIZATION KIT..... UOC:A13,A14,H13,H14	1
					ADAPTER,CONNECTOR (1) 386-9	
					ADAPTER,CONNECTOR (1) 386-11	
					ADAPTER,STRAIGHT,PI(2) 384-3	
					ADAPTER,STRAIGHT,PI(1) 384-15	
					ADAPTER,STRAIGHT,PI(1) 385-5	
					ADAPTER,STRAIGHT,PI(2) 388-2	
					ADAPTER,VEHICLE STO(1) 393-14	
					BASE PLATE,SPACE HE(1) 387-9	
					BLOCK,PLYWOOD (2) 389-8	
					BOLT,MACHINE (4) 388-15	
					BOLT,MACHINE (2) 390-6	
					BOLT,MACHINE (3) 392-3	
					BOW,VEHICULAR,TOP (3) 389-6	
					BRACKET,ANGLE (1) 388-17	
					BRACKET,DOUBLE ANGL(1) 384-12	
					BRACKET,MOUNTING (1) 389-5	
					BRACKET,MOUNTING (2) 397-6	
					BRACKET,MULTIPLE AN(1) 387-11	
					BRACKET,VEHICULAR C(1) 389-13	
					BRACKET,VEHICULAR C(1) 389-13	
					BRACKET,VEHICULAR C(1) 392-6	
					CABLE ASSEMBLY,SPEC(1) 383-9	
					CABLE ASSEMBLY,SPEC(1) 387-18	
					CAP,PROTECTIVE,DUST(23) 394-1	
					CAP,PROTECTIVE,DUST(2) 394-2	
					CAP,PROTECTIVE,DUST(52) 394-3	
					CAP,TUBE (1) 384-5	
					CHANNEL,BODY (1) 396-1	
					CHANNEL,LIFT,VEHICU(1) 396-5	
					CHANNEL,LIFT,VEHICU(1) 396-9	
					CIRCUIT,BREAKER (1) 385-12	
					CLAMP,HOSE (3) 385-4	
					CLAMP,HOSE (2) 386-7	
					CLAMP,HOSE (1) 387-2	
					CLAMP,HOSE (2) 387-5	
					CLAMP,HOSE (3) 388-5	
					CLAMP,HOSE (2) 393-16	
					CLAMP,LOOP (1) 385-2	
					CLAMP,LOOP (1) 386-6	
					CLAMP,LOOP (1) 386-10	
					CLAMP,LOOP (10) 391-7	
					CLAMP,LOOP (4) 396-12	
					CLOSURE END,R.H. (1) 397-11	

(1) ITEM NO	(2) SMR CODE	(3) NSN	(4) CAGEC	(5) PART NUMBER	(6) DESCRIPTION AND USABLE ON CODES(UOC)	(7) QTY
					CLOSURE END,L.H. (1) 397-19	
					CONTROL BOX,ELECTRI(1) 388-16	
					COUPLING,PIPE (1) 385-6	
					COUPLING,PIPE (1) 385-11	
					COVER ASSEMBLY (1) 382-14	
					COVER ASSEMBLY (1) 382-14	
					COVER ASSEMBLY (1) 382-15	
					COVER ASSEMBLY,SIDE(1) 382-15	
					COVER,FITTED,VEHICU(1) 395-6	
					COVER,FLOOR,L.H. (1) 382-11	
					COVER,FLOOR,R.H. (1) 382-11	
					COVER,L.H. (1) 382-7	
					COVER,R.H. (1) 382-7	
					CURTAIN,VEHICULAR,B(2) 389-2	
					DIVERTER,LIGHT (1) 397-14	
					DOOR,VEHICULAR (1) 397-18	
					DUMMY CONNECTOR,PLU(1) 386-1	
					ELBOW,AIR CONDITION(1) 387-3	
					ELBOW,PIPE TO HOSE (1) 388-6	
					ELBOW,PIPE TO TUBE (1) 385-8	
					FILTER,FLUID (1) 388-7	
					FLOOR COVER ASSEMBL(1) 383-1	
					FLOOR COVER ASSEMBL(1) 383-6	
					FRAME SECTION,STRUC(1) 395-17	
					FRAME SECTION,STRUC(1) 397-10	
					GASKET (1) 387-10	
					GROMMET,NONMETALLIC(1) 387-13	
					HANDLE,DOOR (1) 395-10	
					HEATER,VEHICULAR,CO(1) 387-4	
					HOSE,AIR DUCT (1) 393-17	
					HOSE,NONMETALLIC (1) 386-8	
					HOSE,NONMETALLIC (1) 388-1	
					JUNCTION BOX (1) 396-8	
					LADDER,VEHICLE BOA (1) 390-10	
					LEAD,ELECTRICAL (1) 384-10	
					LEAD,ELECTRICAL (1) 386-2	
					MOLDING,METAL (2) 383-3	
					MOLDING,METAL (1) 383-4	
					MOLDING,METAL (1) 393-8	
					MOLDING,METAL (2) 395-2	
					MOLDING,METAL (2) 395-3	
					MOLDING,METAL (1) 395-18	
					MOLDING,METAL (2) 395-23	
					NIPPLE,PIPE (1) 385-9	
					NUT,PLAIN,BLIND RIV(9) 383-7	
					NUT,PLAIN,EXTENDED (50) 391-6	
					NUT,PLAIN,EXTENDED (17) 393-4	
					NUT,PLAIN,EXTENDED (15) 395-21	
					NUT,PLAIN,PLATE (6) 393-8	
					NUT,SELF-LOCKING,CA(4) 390-4	
					NUT,SELF-LOCKING,CA(28) 397-7	
					NUT,SELF-LOCKING,HE(48) 382-6	
					NUT,SELF-LOCKING,HE(16) 382-10	

(1) ITEM NO	(2) SMR CODE	(3) NSN	(4) CAGEC	(5) PART NUMBER	(6) DESCRIPTION AND USABLE ON CODES(UOC)	(7) QTY
					NUT,SELF-LOCKING,HE(2)	384-9
					NUT,SELF-LOCKING,HE(2)	388-3
					NUT,SELF-LOCKING,HE(2)	388-10
					NUT,SELF-LOCKING,HE(36)	389-1
					NUT,SELF-LOCKING,HE(4)	389-4
					NUT,SELF-LOCKING,HE(4)	389-10
					NUT,SELF-LOCKING,HE(18)	389-12
					NUT,SELF-LOCKING,HE(6)	389-14
					NUT,SELF-LOCKING,HE(2)	390-5
					NUT,SELF-LOCKING,HE(4)	390-9
					NUT,SELF-LOCKING,HE(3)	393-12
					NUT,SELF-LOCKING,HE(3)	392-4
					NUT,SELF-LOCKING,HE(4)	392-11
					NUT,SELF-LOCKING,HE(4)	393-15
					NUT,SELF-LOCKING,HE(2)	395-8
					NUT,SELF-LOCKING,HE(4)	396-11
					NUT,SELF-LOCKING,HE(8)	397-5
					NUT,SHEET,SPRING (3)	395-16
					O-RING (1)	387-15
					PIN,COTTER (2)	390-14
					PIN,STRAIGHT,HEADED(2)	390-11
					PLATE,INSTRUCTION (1)	394-4
					PLATE,INSTRUCTION (1)	396-7
					PLATE,MENDING (8)	391-2
					PLATE,MENDING (1)	392-10
					PLATE,MENDING (1)	390-12
					PLATE,MOUNTING (1)	393-2
					PLATE,MOUNTING (1)	395-13
					PLATE,MOUNTING (2)	397-3
					PLATE,SEAM (1)	391-3
					PUMP,FUEL (1)	384-6
					RIVET,BLIND (4)	384-14
					RUBBER STRIP (1)	393-5
					RUBBER STRIP (2)	395-4
					RUBBER,STRIP (2)	395-7
					RUBBER STRIP (1)	395-22
					SCREW,CAP,HEXAGON H(2)	384-13
					SCREW,CAP,HEXAGON H(4)	387-7
					SCREW,CAP,HEXAGON H(6)	387-17
					SCREW,CAP,HEXAGON H(2)	388-8
					SCREW,CAP,HEXAGON H(2)	388-12
					SCREW,CAP,HEXAGON H(4)	389-3
					SCREW,CAP,HEXAGON H(18)	389-11
					SCREW,CAP,HEXAGON H(4)	390-2
					SCREW,CAP,HEXAGON H(2)	390-15
					SCREW,CAP,HEXAGON H(2)	392-7
					SCREW,CAP,HEXAGON H(2)	392-8
					SCREW,CAP,HEXAGON H(1)	393-1
					SCREW,CAP,HEXAGON H(6)	393-3
					SCREW,CAP,HEXAGON H(10)	393-7
					SCREW,CAP,HEXAGON H(3)	393-9
					SCREW,CAP,HEXAGON H(1)	395-12
					SCREW,CAP,HEXAGON H(6)	395-14

(1) ITEM NO	(2) SMR CODE	(3) NSN	(4) CAGEC	(5) PART NUMBER	(6) DESCRIPTION AND USABLE ON CODES(UOC)	(7) QTY
					SCREW,CAP,HEXAGON H(	8) 395-19
					SCREW,CAP,HEXAGON H(	8) 397-8
					SCREW,CAP,HEXAGON H(	4) 397-16
					SCREW,CAP,HEXAGON H(	8) 397-17
					SCREW,MACHINE (	48) 382-4
					SCREW,MACHINE (	8) 382-8
					SCREW,MACHINE (	8) 382-13
					SCREW,MACHINE (	9) 383-5
					SCREW,MACHINE (	4) 389-7
					SCREW,MACHINE (	2) 390-7
					SCREW,MACHINE (	50) 391-1
					SCREW,MACHINE (	4) 393-11
					SCREW,MACHINE (	4) 396-3
					SCREW,MACHINE (	2) 396-6
					SCREW,MACHINE (	14) 397-1
					SCREW,MACHINE (	4) 397-2
					SCREW,MACHINE (	8) 397-4
					SCREW,TAPPING (	20) 395-1
					SCREW,TAPPING (	3) 395-15
					SCREW,TAPPING (	6) 396-2
					SCREW,WOOD (	12) 382-1
					SCREW,WOOD (	19) 383-2
					SCREW,WOOD (	1) 385-1
					SCREW,WOOD (	2) 385-13
					SCREW,WOOD (	8) 387-12
					SCREW,WOOD (	2) 390-13
					SCREW,WOOD (	16) 392-1
					SCREW,WOOD (	4) 392-2
					SCREW,WOOD (	1) 393-6
					SCREW,WOOD (	4) 394-5
					SCREW,WOOD (	8) 395-11
					SCREW,WOOD (	1) 395-20
					SCREW,WOOD (	24) 395-24
					SCREW,WOOD (	14) 396-4
					SCREW,WOOD (	8) 397-12
					SEAL,NONMETALLIC (	2) 395-5
					SEAT BACK (	2) 382-12
					SHELL,ELECTRICAL CO(	1) 386-12
					SHIELD,HEATER DUCT (	1) 387-6
					SHIELD,HEATER DUCT (	1) 388-13
					SLEEVE,COUPLING (	1) 387-1
					SPACER,PLATE (	12) 382-2
					SPACER,SLEEVE (	2) 388-4
					SPACER,SLEEVE (	5) 392-5
					STOP LIGHT-TAILLIGH(	2) 396-13
					STRAINER ELEMENT,SE(	1) 393-13
					STRAP,RETAINING (	20) 391-9
					STRAP,TIEDOWN,ELECT(	1) 386-3
					STRAP,TIEDOWN,ELECT(	1) 388-11
					SUPPORT (	1) 391-4
					SUPPORT (	1) 391-5
					SUPPORT (	1) 391-8
					SUPPORT ASSEMBLY,BO(	1) 390-1

(1) ITEM NO	(2) SMR CODE	(3) NSN	(4) CAGEC	(5) PART NUMBER	(6) DESCRIPTION AND USABLE ON CODES(UOC)	(7) QTY
					SWITCH,SENSITIVE (1) 396-14	
					SWITCH,TOGGLE (1) 396-10	
					TEE,PIPE (1) 384-4	
					TEMPLATE,FUEL PUMP (1) 384-11	
					TOP COVER ASSEMBLY (1) 382-3	
					TOP COVER ASSEMBLY (1) 382-3	
					TUBE (2) 385-3	
					TUBE ASSEMBLY,METAL(1) 384-1	
					TUBE ASSEMBLY,METAL(1) 384-2	
					TUBE ASSEMBLY,METAL(1) 385-7	
					TUBE ASSEMBLY,METAL(1) 386-4	
					TUBE ASSEMBLY,METAL(1) 386-5	
					TUBE ASSEMBLY,METAL(1) 387-14	
					VENTILATOR (1) 397-13	
					VENTILATOR,AIR CIRC(1) 393-10	
					WASHER,FLAT (48) 382-5	
					WASHER,FLAT (16) 382-9	
					WASHER,FLAT (4) 384-8	
					WASHER,FLAT (1) 385-10	
					WASHER,FLAT (1) 387-16	
					WASHER,FLAT (2) 388-9	
					WASHER,FLAT (4) 389-9	
					WASHER,FLAT (4) 390-3	
					WASHER,FLAT (4) 390-8	
					WASHER,FLAT (2) 392-9	
					WASHER,FLAT (4) 395-9	
					WASHER,FLAT (8) 397-9	
					WASHER,FLAT (12) 397-15	
					WASHER,LOCK (1) 384-7	
					WASHER,LOCK (10) 387-8	
					WASHER,LOCK (4) 388-14	

END OF FIGURE

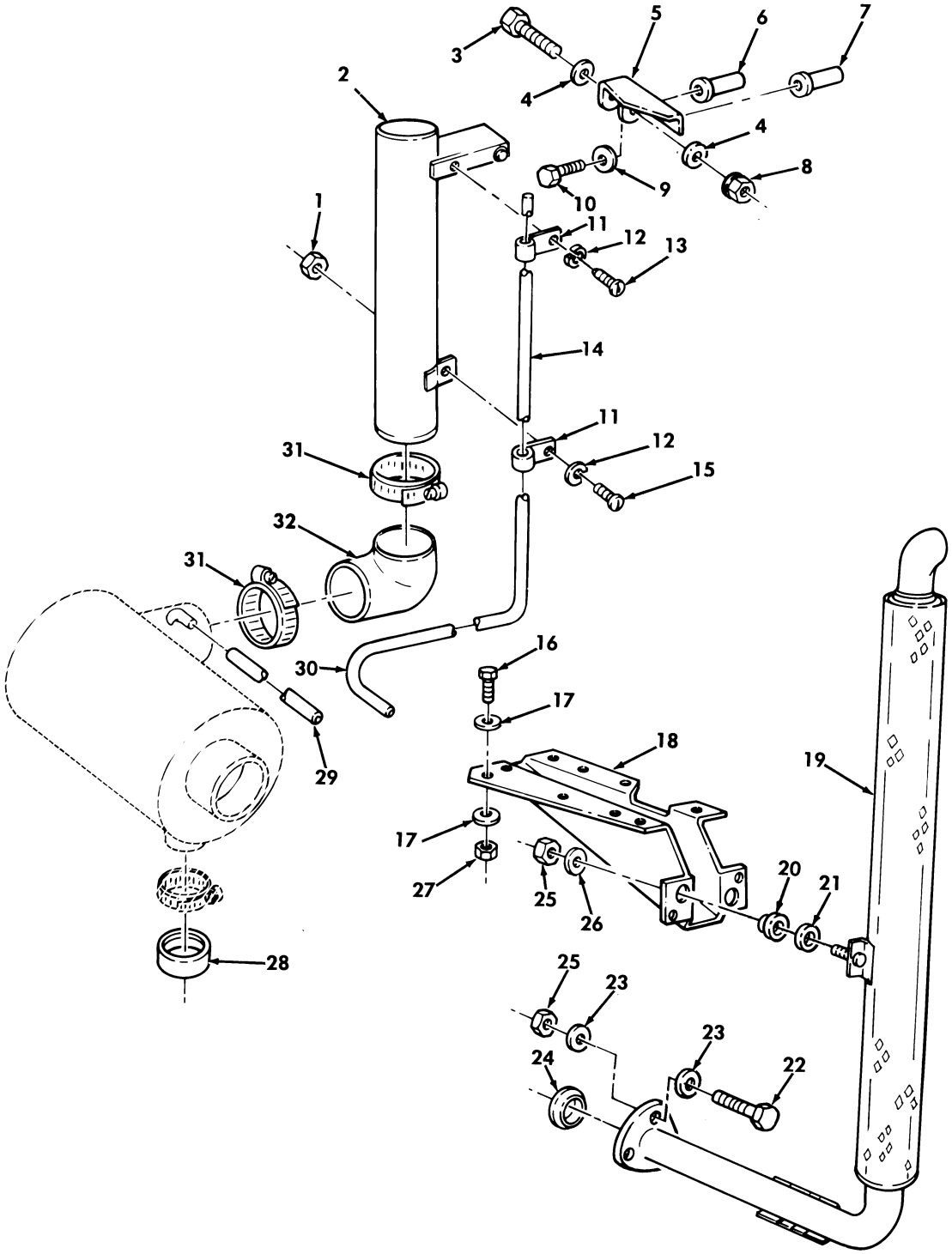

Figure 398. Deep Water Fording Kit, Intake and Exhaust Systems.

(1) ITEM NO	(2) SMR CODE	(3) NSN	(4) CAGEC	(5) PART NUMBER	(6) DESCRIPTION AND USABLE ON CODES(UOC)	(7) QTY
					GROUP 3305 DEEP WATER FORDING KITS	
					FIG. 398 DEEP WATER FORDING KIT, INTAKE AND EXHAUST SYSTEMS	
1	PAOZZ	5310012490899	96906	MS51470-03	NUT,PLAIN,HEXAGON #10-32 PART OF KIT P/N 5705693..... UOC:AVY,A11,A13,A14,A20,A24,A25,A26, A27,BVY,B16,B17,B18,B20,B24,B25,C17, HVY,H11,H13,H14,H16,H17,H18,H20,H21, H24,H25,H26,H27,H28,MMM,NNN	1
2	PFOZZ	2510011980333	19207	12339843	STACK ASSEMBLY PART OF KIT P/N 5705693..... UOC:AVY,A11,A13,A14,A20,A24,A25,A26, A27,BVY,B16,B17,B18,B20,B24,B25,C17, HVY,H11,H13,H14,H16,H17,H18,H20,H21, H24,H25,H26,H27,H28,MMM,NNN	1
3	PAOZZ	5305000695578	96906	MS90725-94	SCREW,CAP,HEXAGON H 7/16-14 X 2.75 PART OF KIT P/N 5705693..... UOC:AVY,A11,A13,A14,A20,A24,A25,A26, A27,BVY,B16,B17,B18,B20,B24,B25,C17, HVY,H11,H13,H14,H16,H17,H18,H20,H21, H24,H25,H26,H27,H28,MMM,NNN	1
4	PAOZZ	5310008094085	96906	MS27183-16	WASHER,FLAT 7/16 PART OF KIT P/N 5705693..... UOC:AVY,A11,A13,A14,A20,A24,A25,A26, A27,BVY,B16,B17,B18,B20,B24,B25,C17, HVY,H11,H13,H14,H16,H17,H18,H20,H21, H24,H25,H26,H27,H28,MMM,NNN	2
5	PFOZZ	5340012389543	19207	12339832	BRACKET,MOUNTING PART OF KIT P/N 5705693..... UOC:AVY,A11,A13,A14,A20,A24,A25,A26, A27,BVY,B16,B17,B18,B20,B24,B25,C17, HVY,H11,H13,H14,H16,H17,H18,H20,H21, H24,H25,H26,H27,H28,MMM,NNN	1
6	PFOZZ	5310012317455	19207	12339397-3	NUT,PLAIN,BLIND RIV 1/4-20 PART OF KIT P/N 5705693..... UOC:AVY,A11,A13,A14,A20,A24,A25,A26, A27,BVY,B16,B17,B18,B20,B24,B25,C17, HVY,H11,H13,H14,H16,H17,H18,H20,H21, H24,H25,H26,H27,H28,MMM,NNN	1
7	PAOZZ	5310013886205	19207	12339397-6	NUT,PLAIN,BLIND RIV 1/4-20 PART OF KIT P/N 5705693..... UOC:AVY,A11,A13,A14,A20,A24,A25,A26, A27,BVY,B16,B17,B18,B20,B24,B25,C17, HVY,H11,H13,H14,H16,H17,H18,H20,H21, H24,H25,H26,H27,H28,MMM,NNN	1
8	PAOZZ	5310011504003	24617	9422299	NUT,SELF-LOCKING,HE 7/16-14 PART OF KIT P/N 5705693..... UOC:AVY,A11,A13,A14,A20,A24,A25,A26, A27,BVY,B16,B17,B18,B20,B24,B25,C17, HVY,H11,H13,H14,H16,H17,H18,H20,H21, H24,H25,H26,H27,H28,MMM,NNN	1

(1) ITEM NO	(2) SMR CODE	(3) NSN	(4) CAGEC	(5) PART NUMBER	(6) DESCRIPTION AND USABLE ON CODES(UOC)	(7) QTY
9	PAOZZ	5310008775975	19207	10918603	WASHER,FLAT 1/4 PART OF KIT P/N 5705693..... UOC:AVY,A11,A13,A14,A20,A24,A25,A26, A27,BVY,B16,B17,B18,B20,B24,B25,C17, HVY,H11,H13,H14,H16,H17,H18,H20,H21, H24,H25,H26,H27,H28,MMM,NNN	2
10	PAOZZ	5305000680509	80204	B1821BH025C125N	SCREW,CAP,HEXAGON H 1/4-20 X 1.25 PART OF KIT P/N 5705693..... UOC:AVY,A11,A13,A14,A20,A24,A25,A26, A27,BVY,B16,B17,B18,B20,B24,B25,C17, HVY,H11,H13,H14,H16,H17,H18,H20,H21, H24,H25,H26,H27,H28,MMM,NNN	2
11	PAOZZ	5340000797837	96906	MS21333-67	CLAMP,LOOP PART OF KIT P/N 5705693.. UOC:AVY,A11,A13,A14,A20,A24,A25,A26, A27,BVY,B16,B17,B18,B20,B24,B25,C17, HVY,H11,H13,H14,H16,H17,H18,H20,H21, H24,H25,H26,H27,H28,MMM,NNN	2
12	PAOZZ	5310007217809	96906	MS35340-43	WASHER,LOCK #10 PART OF KIT P/N 5705693..... UOC:AVY,A11,A13,A14,A20,A24,A25,A26, A27,BVY,B16,B17,B18,B20,B24,B25,C17, HVY,H11,H13,H14,H16,H17,H18,H20,H21, H24,H25,H26,H27,H28,MMM,NNN	2
13	PAOZZ	5305012542461	34623	5592899	SCREW,TAPPING,THREA #10-32 X 1/2 PART OF KIT P/N 5705693..... UOC:AVY,A11,A13,A14,A20,A24,A25,A26, A27,BVY,B16,B17,B18,B20,B24,B25,C17, HVY,H11,H13,H14,H16,H17,H18,H20,H21, H24,H25,H26,H27,H28,MMM,NNN	1
14	PFOZZ	4710012096746	34623	12339833	TUBE,BENT,METALLIC PART OF KIT P/N 5705693..... UOC:AVY,A11,A13,A14,A20,A24,A25,A26, A27,BVY,B16,B17,B18,B20,B24,B25,C17, HVY,H11,H13,H14,H16,H17,H18,H20,H21, H24,H25,H26,H27,H28,MMM,NNN	1
15	PAOZZ	5305009897434	96906	MS35207-263	SCREW,MACHINE #10-32 X 1/2 PART OF KIT P/N 5705693..... UOC:AVY,A11,A13,A14,A20,A24,A25,A26, A27,BVY,B16,B17,B18,B20,B24,B25,C17, HVY,H11,H13,H14,H16,H17,H18,H20,H21, H24,H25,H26,H27,H28,MMM,NNN	1
16	PAOZZ	5305000680502	96906	MS90725-6	SCREW,CAP,HEXAGON H 1/4-20 X 3/4 PART OF KIT P/N 5705693..... UOC:AVY,A11,A13,A14,A20,A24,A25,A26, A27,BVY,B16,B17,B18,B20,B24,B25,C17, HVY,H11,H13,H14,H16,H17,H18,H20,H21, H24,H25,H26,H27,H28,MMM,NNN	8
17	PAOZZ	5310011023270	24617	2436161	WASHER,FLAT 1/4 PART OF KIT P/N 5705693..... UOC:AVY,A11,A13,A14,A20,A24,A25,A26, A27,BVY,B16,B17,B18,B20,B24,B25,C17, HVY,H11,H13,H14,H16,H17,H18,H20,H21, H24,H25,H26,H27,H28,MMM,NNN	16

(1) ITEM NO	(2) SMR CODE	(3) NSN	(4) CAGEC	(5) PART NUMBER	(6) DESCRIPTION AND USABLE ON CODES(UOC)	(7) QTY
18	PFOZZ	5340011857959	19207	12339848	BRACKET,PIPE PART OF KIT P/N 5705693 UOC:AVY,A11,A13,A14,A20,A24,A25,A26, A27,BVY,B16,B17,B18,B20,B24,B25,C17, HVY,H11,H13,H14,H16,H17,H18,H20,H21, H24,H25,H26,H27,H28,MMM,NNN	1
19	PAOZZ	2990012102176	19207	12339849	PIPE,EXHAUST PART OF KIT P/N 5705693 UOC:AVY,A11,A13,A14,A20,A24,A25,A26, A27,BVY,B16,B17,B18,B20,B24,B25,C17, HVY,H11,H13,H14,H16,H17,H18,H20,H21, H24,H25,H26,H27,H28,MMM,NNN	1
20	PFOZZ	5365012135739	34623	5584575-B	BUSHING,NONMETALLIC PART OF KIT P/N 5705693..... UOC:AVY,A11,A13,A14,A20,A24,A25,A26, A27,BVY,B16,B17,B18,B20,B24,B25,C17, HVY,H11,H13,H14,H16,H17,H18,H20,H21, H24,H25,H26,H27,H28,MMM,NNN	2
21	PAOZZ	5310012987770	3M915	5596167	WASHER,FLAT 3/8 PART OF KIT P/N 5705693..... UOC:AVY,A11,A13,A14,A20,A24,A25,A26, A27,BVY,B16,B17,B18,B20,B24,B25,C17, HVY,H11,H13,H14,H16,H17,H18,H20,H21, H24,H25,H26,H27,H28,MMM,NNN	2
22	PAOZZ	5305007829489	80204	B1821BH038C200N	SCREW,CAP,HEXAGON H 3/8-16 X 2.00 PART OF KIT P/N 5705693..... UOC:AVY,A11,A13,A14,A20,A24,A25,A26, A27,BVY,B16,B17,B18,B20,B24,B25,C17, HVY,H11,H13,H14,H16,H17,H18,H20,H21, H24,H25,H26,H27,H28,MMM,NNN	3
23	PAOZZ	5310000877493	96906	MS27183-13	WASHER,FLAT 3/8 PART OF KIT P/N 5705693..... UOC:AVY,A11,A13,A14,A20,A24,A25,A26, A27,BVY,B16,B17,B18,B20,B24,B25,C17, HVY,H11,H13,H14,H16,H17,H18,H20,H21, H24,H25,H26,H27,H28,MMM,NNN	6
24	PFOZZ	5330012000466	19207	12338339	GASKET PART OF KIT P/N 5705693..... UOC:AVY,A11,A13,A14,A20,A24,A25,A26, A27,BVY,B16,B17,B18,B20,B24,B25,C17, HVY,H11,H13,H14,H16,H17,H18,H20,H21, H24,H25,H26,H27,H28,MMM,NNN	1
25	PAOZZ	5310009359021	96906	MS51943-35	NUT,SELF-LOCKING,HE 3/8-16 PART OF KIT P/N 5705693..... UOC:AVY,A11,A13,A14,A20,A24,A25,A26, A27,BVY,B16,B17,B18,B20,B24,B25,C17, HVY,H11,H13,H14,H16,H17,H18,H20,H21, H24,H25,H26,H27,H28,MMM,NNN	5
26	PAOZZ	5310012581536	0MAY0	5593221	WASHER,FLAT 3/8 PART OF KIT P/N 5705693..... UOC:AVY,A11,A13,A14,A20,A24,A25,A26, A27,BVY,B16,B17,B18,B20,B24,B25,C17, HVY,H11,H13,H14,H16,H17,H18,H20,H21, H24,H25,H26,H27,H28,MMM,NNN	2
27	PAOZZ	5310000614650	96906	MS51943-31	NUT,SELF-LOCKING,HE 1/4-20 PART OF KIT P/N 5705693.....	8

(1) ITEM NO	(2) SMR CODE	(3) NSN	(4) CAGEC	(5) PART NUMBER	(6) DESCRIPTION AND USABLE ON CODES(UOC)	(7) QTY
					UOC:AVY,A11,A13,A14,A20,A24,A25,A26, A27,BVY,B16,B17,B18,B20,B24,B25,C17, HVY,H11,H13,H14,H16,H17,H18,H20,H21, H24,H25,H26,H27,H28,MMM,NNN	
28	PAOZZ	5340011972382	19207	12339996	CAP,PROTECTIVE,DUST PART OF KIT P/N 5705693..... UOC:AVY,A11,A13,A14,A20,A24,A25,A26, A27,BVY,B16,B17,B18,B24,B25,C17,HVY, H11,H13,H14,H15,H16,H17,H18,H20,H21, H24,H25,H26,H27,H28,MMM,NNN	1
29	MOOZZ		34623	5591707	TUBE MAKE FROM TUBE,P/N CPR104420-1,70 INCHES LONG PART OF KIT P/N 5705693..... UOC:AVY,A11,A13,A14,A20,A24,A25,A26, A27,BVY,B16,B17,B18,B20,B24,B25,C17, HVY,H11,H13,H14,H16,H17,H18,H20,H21, H24,H25,H26,H27,H28,MMM,NNN	1
30	MOOZZ		34623	5591210	TUBE,NONMETALLIC MAKE FROM TUBE,P/N CPR104420-2,11 INCHES LONG PART OF KIT P/N 5705693..... UOC:AVY,A11,A13,A14,A20,A24,A25,A26, A27,BVY,B16,B17,B18,B20,B24,B25,C17, HVY,H11,H13,H14,H16,H17,H18,H20,H21, H24,H25,H26,H27,H28,MMM,NNN	1
31	PAOZZ	4730003599487	66295	C72P	CLAMP,HOSE PART OF KIT P/N 5705693.. UOC:AVY,A11,A13,A14,A20,A24,A25,A26, A27,BVY,B16,B17,B18,B20,B24,B25,C17, HVY,H11,H13,H14,H16,H17,H18,H20,H21, H24,H25,H26,H27,H28,MMM,NNN	2
32	PAOZZ	4720011945338	34623	5578943	HOSE,PREFORMED PART OF KIT P/N 5705693..... UOC:AVY,A11,A13,A14,A20,A24,A25,A26, A27,BVY,B16,B17,B18,B20,B24,B25,C17, HVY,H11,H13,H14,H16,H17,H18,H20,H21, H24,H25,H26,H27,H28,MMM,NNN	1

END OF FIGURE

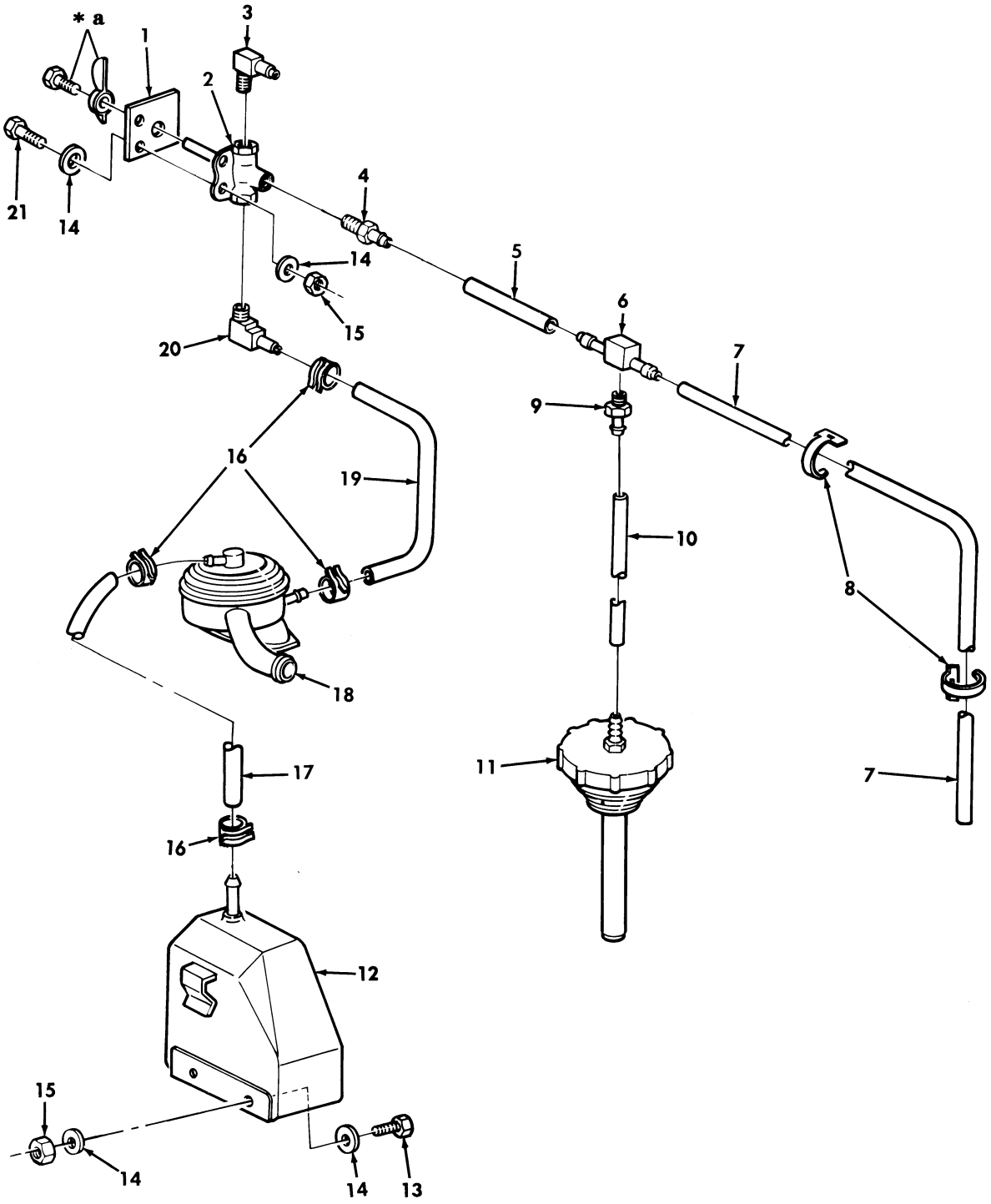

* a PART OF ITEM 2

Figure 399. Deep Water Fording Kit, Selector Valve, Sensor Cup, and Vent Lines.

(1) ITEM NO	(2) SMR CODE	(3) NSN	(4) CAGEC	(5) PART NUMBER	(6) DESCRIPTION AND USABLE ON CODES(UOC)	(7) QTY
					GROUP 3305 DEEP WATER FORDING KITS	
					FIG. 399 DEEP WATER FORDING KIT, SELECTOR VALVE,SENSOR CUP,AND VENT LINES	
1	PAOZZ	9905012058635	19207	12339109	PLATE,IDENTIFICATIO PART OF KIT P/N 5705693..... UOC:AVY,A11,A13,A14,A20,A24,A25,A26, A27,BVY,B16,B17,B18,B20,B24,B25,C17, HVY,H11,H13,H14,H16,H17,H18,H20,H21, H24,H25,H26,H27,H28,MMM,NNN	1
2	PAOZZ	4820011928030	70411	220C-J	VALVE,CROSS PART OF KIT P/N 5705693. UOC:AVY,A11,A13,A14,A20,A24,A25,A26, A27,BVY,B16,B17,B18,B20,B24,B25,C17, HVY,H11,H13,H14,H16,H17,H18,H20,H21, H24,H25,H26,H27,H28,MMM,NNN	1
3	PAOZZ	4730010707680	01989	1069X4	ELBOW,PIPE TO HOSE PART OF KIT P/N 5705693..... UOC:AVY,A11,A13,A14,A20,A24,A25,A26, A27,BVY,B16,B17,B18,B20,B24,B25,C17, HVY,H11,H13,H14,H16,H17,H18,H20,H21, H24,H25,H26,H27,H28,MMM,NNN	1
4	PAOZZ	4730011855348	01989	1068X4	ADAPTER,STRAIGHT,PI PART OF KIT P/N 5705693..... UOC:AVY,A11,A13,A14,A20,A24,A25,A26, A27,BVY,B16,B17,B18,B20,B24,B25,C17, HVY,H11,H13,H14,H16,H17,H18,H20,H21, H24,H25,H26,H27,H28,MMM,NNN	1
5	MOOZZ		34623	5584373	TUBE,NONMETALLIC MAKE FROM TUBE,P/N CPR104420-1, 26 INCHES LONG PART OF KIT P/N 5705693..... UOC:AVY,A11,A13,A14,A20,A24,A25,A26, A27,BVY,B16,B17,B18,B20,B24,B25,C17, HVY,H11,H13,H14,H16,H17,H18,H20,H21, H24,H25,H26,H27,H28,MMM,NNN	1
6	PAOZZ	4730010035105	79470	1064X4	TEE,HOSE PART OF KIT P/N 5705693.... UOC:AVY,A11,A13,A14,A20,A24,A25,A26, A27,BVY,B16,B17,B18,B20,B24,B25,C17, HVY,H11,H13,H14,H16,H17,H18,H20,H21, H24,H25,H26,H27,H28,MMM,NNN	1
7	MOOZZ		34623	5591253	TUBE MAKE FROM TUBE, P/N CPR104420-1, 41 INCHES LONG PART OF KIT P/N 5705693..... UOC:AVY,A11,A13,A14,A20,A24,A25,A26, A27,BVY,B16,B17,B18,B20,B24,B25,C17, HVY,H11,H13,H14,H16,H17,H18,H20,H21, H24,H25,H26,H27,H28,MMM,NNN	1
8	PAOZZ	5340011494434	7X677	3816659	STRAP,LINE SUPPORTI PART OF KIT P/N 5705693..... UOC:AVY,A11,A13,A14,A20,A24,A25,A26, A27,BVY,B16,B17,B18,B20,B24,B25,C17, HVY,H11,H13,H14,H16,H17,H18,H20,H21,	3

(1) ITEM NO	(2) SMR CODE	(3) NSN	(4) CAGEC	(5) PART NUMBER	(6) DESCRIPTION AND USABLE ON CODES(UOC)	(7) QTY
					H24,H25,H26,H27,H28,MMM,NNN	
9	PAOZZ	4730005951078	24869	AM-4X2-B	ADAPTER,STRAIGHT,PI PART OF KIT P/N 5705693..... UOC:AVY,A11,A13,A14,A20,A24,A25,A26, A27,BVY,B16,B17,B18,B20,B24,B25,C17, HVY,H11,H13,H14,H16,H17,H18,H20,H21, H24,H25,H26,H27,H28,MMM,NNN	1
10	MOOZZ		34623	5582644	TUBE MAKE FROM TUBE, P/N CPR104420-1, 20 INCHES LONG PART OF KIT P/N 5705693..... UOC:AVY,A11,A13,A14,A20,A24,A25,A26, A27,BVY,B16,B17,B18,B20,B24,B25,C17, HVY,H11,H13,H14,H16,H17,H18,H20,H21, H24,H25,H26,H27,H28,MMM,NNN	1
11	PAOZZ	2590011924425	19207	12339997	CAP,FILLER OPENING PART OF KIT P/N 5705693..... UOC:AVY,A11,A13,A14,A20,A24,A25,A26, A27,BVY,B16,B17,B18,B20,B24,B25,C17, HVY,H11,H13,H14,H16,H17,H18,H20,H21, H24,H25,H26,H27,H28,MMM,NNN	1
12	PAOZZ	2540011924502	19207	12339845	CUP,SENSOR,DEEP WAT PART OF KIT P/N 5705693..... UOC:AVY,A11,A13,A14,A20,A24,A25,A26, A27,BVY,B16,B17,B18,B20,B24,B25,C17, HVY,H11,H13,H14,H16,H17,H18,H20,H21, H24,H25,H26,H27,H28,MMM,NNN	1
13	PAOZZ	5305000680502	96906	MS90725-6	SCREW,CAP,HEXAGON H 1/4-20 X 3/4 PART OF KIT P/N 5705693..... UOC:AVY,A11,A13,A14,A20,A24,A25,A26, A27,BVY,B16,B17,B18,B20,B24,B25,C17, HVY,H11,H13,H14,H16,H17,H18,H20,H21, H24,H25,H26,H27,H28,MMM,NNN	2
14	PAOZZ	5310011023270	24617	2436161	WASHER,FLAT PART OF KIT P/N 5705693. UOC:AVY,A11,A13,A14,A20,A24,A25,A26, A27,BVY,B16,B17,B18,B20,B24,B25,C17, HVY,H11,H13,H14,H16,H17,H18,H20,H21, H24,H25,H26,H27,H28,MMM,NNN	8
15	PAOZZ	5310000614650	96906	MS51943-31	NUT,SELF-LOCKING,HE 1/4-20 PART OF KIT P/N 5705693..... UOC:AVY,A11,A13,A14,A20,A24,A25,A26, A27,BVY,B16,B17,B18,B20,B24,B25,C17, HVY,H11,H13,H14,H16,H17,H18,H20,H21, H24,H25,H26,H27,H28,MMM,NNN	4
16	PAOZZ	4730001389201	81348	WW-C-4408	CLAMP,HOSE PART OF KIT P/N 5705693.. UOC:AVY,A11,A13,A14,A20,A24,A25,A26, A27,BVY,B16,B17,B18,B20,B24,B25,C17, HVY,H11,H13,H14,H16,H17,H18,H20,H21, H24,H25,H26,H27,H28,MMM,NNN	4
17	MOOZZ		34623	12339981-2	HOSE,NONMETALLIC MAKE FROM HOSE,P/N RB1450-1-4IDX1-20D, 25 INCHES LONG PART OF KIT P/N 5705693..... UOC:AVY,A11,A13,A14,A20,A24,A25,A26, A27,BVY,B16,B17,B18,B20,B24,B25,C17,	1

(1) ITEM NO	(2) SMR CODE	(3) NSN	(4) CAGEC	(5) PART NUMBER	(6) DESCRIPTION AND USABLE ON CODES(UOC)	(7) QTY
					HVY,H11,H13,H14,H16,H17,H18,H20,H21, H24,H25,H26,H27,H28,MMM,NNN	
18	PAOZZ	4820011927678	70040	25043364	VALVE,VENT PART OF KIT P/N 5705693.. UOC:AVY,A11,A13,A14,A20,A24,A25,A26, A27,BVY,B16,B17,B18,B20,B24,B25,C17, HVY,H11,H13,H14,H16,H17,H18,H20,H21, H24,H25,H26,H27,H28,MMM,NNN	1
19	MOOZZ		34623	5583855	HOSE MAKE FROM HOSE, P/N RB1450-1-4IDX1-20D, 42 INCHES LONG PART OF KIT P/N 5705693..... UOC:AVY,A11,A13,A14,A20,A24,A25,A26, A27,BVY,B16,B17,B18,B20,B24,B25,C17, HVY,H11,H13,H14,H16,H17,H18,H20,H21, H24,H25,H26,H27,H28,MMM,NNN	1
20	PAOZZ	4730012004277	79470	1582	ELBOW,PIPE TO HOSE PART OF KIT P/N 5705693..... UOC:AVY,A11,A13,A14,A20,A24,A25,A26, A27,BVY,B16,B17,B18,B20,B24,B25,C17, HVY,H11,H13,H14,H16,H17,H18,H20,H21, H24,H25,H26,H27,H28,MMM,NNN	1
21	PAOZZ	5305000680508	80204	B1821BH025C075N	SCREW,CAP,HEXAGON H PART OF KIT P/N 5705693..... UOC:AVY,A11,A13,A14,A20,A24,A25,A26, A27,BVY,B16,B17,B18,B20,B24,B25,C17, HVY,H11,H13,H14,H16,H17,H18,H20,H21, H24,H25,H26,H27,H28	2

END OF FIGURE

1—2 5—6

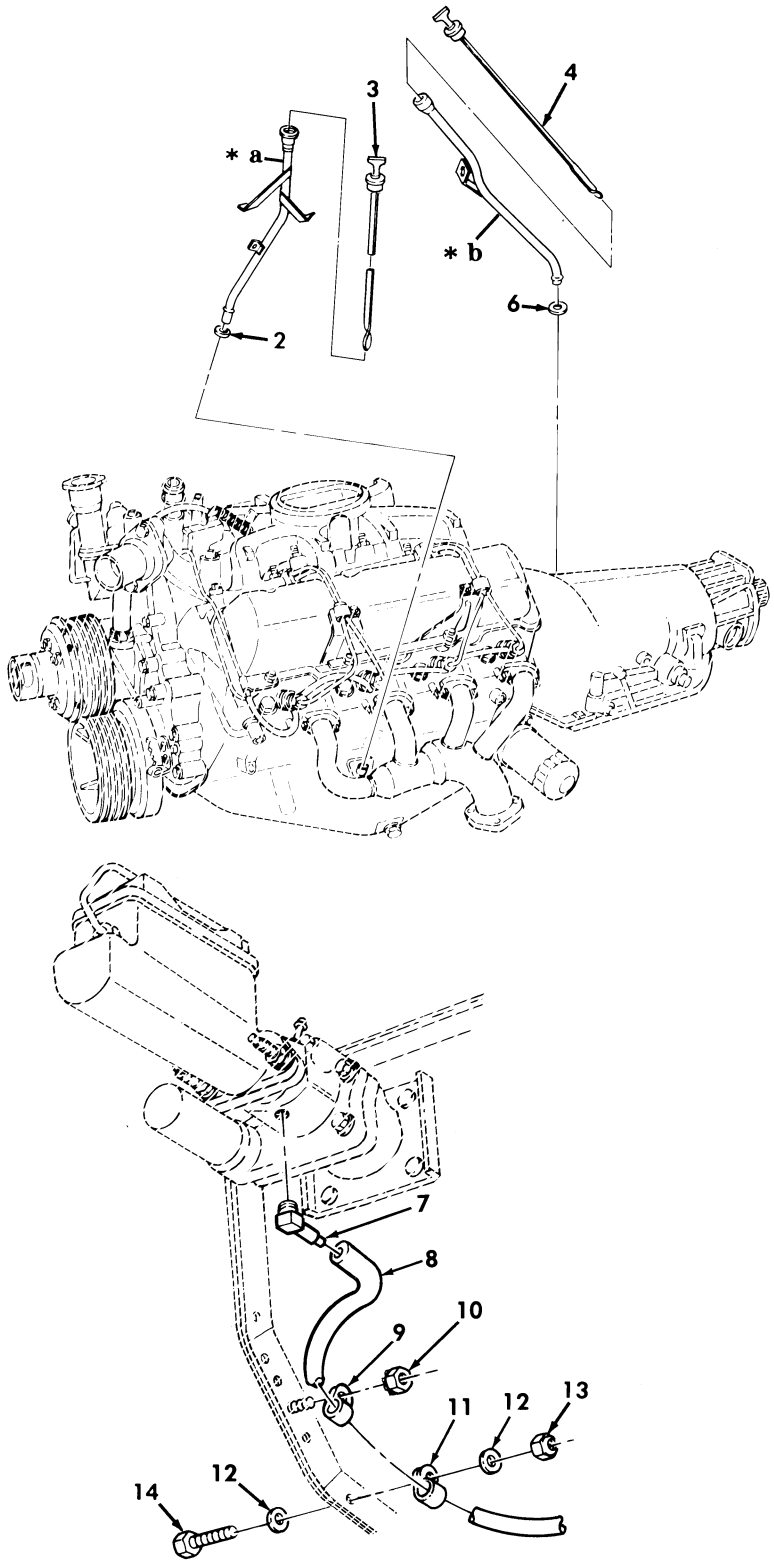

* a PART OF ITEM 1
* b PART OF ITEM 5

Figure 400. Deep Water Fording Kit, Hydro-Boost Vent Line, Engine and Transmission Dipstick, and Tube Assemblies

(1) ITEM NO	(2) SMR CODE	(3) NSN	(4) CAGEC	(5) PART NUMBER	(6) DESCRIPTION AND USABLE ON CODES(UOC)	(7) QTY
					GROUP 3305 DEEP WATER FORDING KITS	
					FIG. 400 DEEP WATER FORDING KIT, HYDRO-BOOST VENT LINE,ENGINE AND TRANSMISSION DIPSTICK,AND TUBE ASSEMBLIES	
1	PFOZZ	4710012028245	19207	12339844	TUBE ASSEMBLY,METAL PART OF KIT P/N 5705693..... UOC:AVY,A11,A13,A14,A20,A24,A25,A26, A27,BVY,B16,B17,B18,B20,B24,B25,C17, HVY,H11,H13,H14,H16,H17,H18,H20,H21, H24,H25,H26,H27,H28,MMM,NNN	1
2	PAOZZ	5331009359136	11862	274244	.O-RING..... UOC:AVY,A11,A13,A14,A20,A24,A25,A26, A27,BVY,B16,B17,B18,B20,B24,B25,C17, HVY,H11,H13,H14,H16,H17,H18,H20,H21, H24,H25,H26,H27,H28,MMM,NNN	1
3	PAOZZ	6680011853202	19207	12339846	GAGE ROD-CAP,LIQUID PART OF KIT P/N 5705693..... UOC:AVY,A11,A13,A14,A20,A24,A25,A26, A27,BVY,B16,B17,B18,B20,B24,B25,C17, HVY,H11,H13,H14,H16,H17,H18,H20,H21, H24,H25,H26,H27,H28,MMM,NNN	1
4	PAOZZ	6680014667238	19207	12460314	GAGE ROD-CAP,LIQUID..... UOC:BVY,B20,B24,B25,C17,NNN	1
4	PAOZZ	6680011794349	34623	5582843	GAGE ROD-CAP,LIQUID PART OF KIT P/N 5705693..... UOC:AVY,A11,A13,A14,A20,A24,A25,A26, A27,B16,B17,B18,HVY,H11,H13,H14,H16, H17,H18,H20,H21,H24,H25,H26,H27,H28, MMM	1
5	PAOZZ	4710011794346	19207	12339147-2	TUBE,BENT,METALLIC PART OF KIT P/N 5705693..... UOC:AVY,A11,A13,A14,A20,A24,A25,A26, A27,BVY,B16,B17,B18,B20,B24,B25,C17, HVY,H11,H13,H14,H16,H17,H18,H20,H21, H24,H25,H26,H27,H28,MMM,NNN	1
6	PAOZZ	5330011846492	02697	2-113N497-70	.PACKING,PREFORMED..... UOC:AVY,A11,A13,A14,A20,A24,A25,A26, A27,BVY,B16,B17,B18,B20,B24,B25,C17, HVY,H11,H13,H14,H16,H17,H18,H20,H21, H24,H25,H26,H27,H28,MMM,NNN	1
7	PAOZZ	4730011953803	01989	1069X4X1	ELBOW,PIPE TO HOSE PART OF KIT P/N 5705693..... UOC:AVY,A11,A13,A14,A20,A24,A25,A26, A27,BVY,B16,B17,B18,B20,B24,B25,C17, HVY,H11,H13,H14,H16,H17,H18,H20,H21, H24,H25,H26,H27,H28,MMM,NNN	1
8	MOOZZ		34623	5582644	TUBE MAKE FROM TUBE, P/N CPR104420-1, 20 INCHES LONG PART OF KIT P/N 5705693..... UOC:AVY,A11,A13,A14,A20,A24,A25,A26,	1

(1) ITEM NO	(2) SMR CODE	(3) NSN	(4) CAGEC	(5) PART NUMBER	(6) DESCRIPTION AND USABLE ON CODES(UOC)	(7) QTY
					A27,BVY,B16,B17,B18,B20,B24,B25,C17, HVY,H11,H13,H14,H16,H17,H18,H20,H21, H24,H25,H26,H27,H28,MMM,NNN	
9	PAOZZ	5340000797837	96906	MS21333-67	CLAMP,LOOP PART OF KIT P/N 5705693.. UOC:AVY,A11,A13,A14,A20,A24,A25,A26, A27,BVY,B16,B17,B18,B20,B24,B25,C17, HVY,H11,H13,H14,H16,H17,H18,H20,H21, H24,H25,H26,H27,H28,MMM,NNN	1
10	PAOZZ	5310001249265	72582	271169	NUT,PLAIN,ASSEMBLED PART OF KIT P/N 5705693..... UOC:AVY,A11,A13,A14,A20,A24,A25,A26, A27,BVY,B16,B17,B18,B20,B24,B25,C17, HVY,H11,H13,H14,H16,H17,H18,H20,H21, H24,H25,H26,H27,H28,MMM,NNN	1
11	PAOZZ	5340008091490	96906	MS21333-98	CLAMP,LOOP PART OF KIT P/N 5705693.. UOC:AVY,A11,A13,A14,A20,A24,A25,A26, A27,BVY,B16,B17,B18,B20,B24,B25,C17, HVY,H11,H13,H14,H16,H17,H18,H20,H21, H24,H25,H26,H27,H28,MMM,NNN	1
12	PAOZZ	5310011023270	24617	2436161	WASHER,FLAT 1/4 PART OF KIT P/N 5705693..... UOC:AVY,A11,A13,A14,A20,A24,A25,A26, A27,BVY,B16,B17,B18,B20,B24,B25,C17, HVY,H11,H13,H14,H16,H17,H18,H20,H21, H24,H25,H26,H27,H28,MMM,NNN	2
13	PAOZZ	5310000614650	96906	MS51943-31	NUT,SELF-LOCKING,HE 1/4-20 PART OF KIT P/N 5705693..... UOC:AVY,A11,A13,A14,A20,A24,A25,A26, A27,BVY,B16,B17,B18,B20,B24,B25,C17, HVY,H11,H13,H14,H16,H17,H18,H20,H21, H24,H25,H26,H27,H28,MMM,NNN	1
14	PAOZZ	5305000680502	96906	MS90725-6	SCREW,CAP,HEXAGON H 1/4-20 X 3/4 PART OF KIT P/N 5705693..... UOC:AVY,A11,A13,A14,A20,A24,A25,A26, A27,BVY,B16,B17,B18,B20,B24,B25,C17, HVY,H11,H13,H14,H16,H17,H18,H20,H21, H24,H25,H26,H27,H28,MMM,NNN	1
KIT	PDOZZ	2590013195435	34623	5705693	MODIFICATION KIT,VE..... UOC:AVY,A11,A13,A14,A20,A24,A25,A26, A27,BVY,B16,B17,B18,B20,B24,B25,C17, HVY,H11,H13,H14,H16,H17,H18,H20,H21, H24,H25,H26,H27,H28,MMM,NNN	1
					ADAPTER,STRAIGHT,PI(1) 399-4	
					ADAPTER,STRAIGHT,PI(1) 399-9	
					BRACKET,MOUNTING (1) 398-5	
					BRACKET,PIPE (1) 398-18	
					BUSHING,NONMETALLIC(2) 398-20	
					CAP,FILLER OPENING (1) 399-11	
					CAP,PROTECTIVE,DUST(1) 398-28	
					CLAMP,HOSE (2) 398-31	
					CLAMP,HOSE (4) 399-16	
					CLAMP,LOOP (1) 400-9	
					CLAMP,LOOP (1) 400-11	

(1) ITEM NO	(2) SMR CODE	(3) NSN	(4) CAGEC	(5) PART NUMBER	(6) DESCRIPTION AND USABLE ON CODES(UOC)	(7) QTY
					CLAMP,LOOP (2) 398-11	
					CUP,SENSOR,DEEP WAT(1) 399-12	
					ELBOW,PIPE TO HOSE (1) 399-3	
					ELBOW,PIPE TO HOSE (1) 399-20	
					ELBOW,PIPE TO HOSE (1) 400-7	
					GAGE ROD-CAP,LIQUID(1) 400-3	
					GAGE ROD-CAP,LIQUID(1) 400-4	
					GAGE ROD-CAP,LIQUID(1) 400-4	
					GASKET (1) 398-24	
					HOSE (1) 399-19	
					HOSE,NONMETALLIC (1) 399-17	
					HOSE,PREFORMED (1) 398-32	
					NUT,PLAIN,ASSEMBLED(1) 400-10	
					NUT,PLAIN,HEXAGON (1) 398-1	
					NUT,PLAIN,BLIND RIV(1) 398-6	
					NUT,PLAIN,BLIND RIV(1) 398-7	
					NUT,SELF-LOCKING,HE(1) 400-13	
					NUT,SELF-LOCKING,HE(1) 398-8	
					NUT,SELF-LOCKING,HE(4) 399-15	
					NUT,SELF-LOCKING,HE(5) 398-25	
					NUT,SELF-LOCKING,HE(8) 398-27	
					PIPE,EXHAUST (1) 398-19	
					PLATE,IDENTIFICATIO(1) 399-1	
					SCREW,CAP,HEXAGON H(1) 398-3	
					SCREW,CAP,HEXAGON H(2) 398-10	
					SCREW,CAP,HEXAGON H(2) 399-13	
					SCREW,CAP,HEXAGON H(2) 399-21	
					SCREW,CAP,HEXAGON H(1) 400-14	
					SCREW,CAP,HEXAGON H(8) 398-16	
					SCREW,CAP,HEXAGON H(3) 398-22	
					SCREW,MACHINE (1) 398-15	
					SCREW,TAPPING,THREA(1) 398-13	
					STACK ASSEMBLY (1) 398-2	
					STRAP,LINE SUPPORTI(3) 399-8	
					TEE,HOSE (1) 399-6	
					TUBE (1) 398-29	
					TUBE (1) 400-8	
					TUBE (1) 399-10	
					TUBE (1) 399-7	
					TUBE ASSEMBLY,METAL(1) 400-1	
					TUBE,BENT,METALLIC (1) 400-5	
					TUBE,BENT,METALLIC (1) 398-14	
					TUBE,NONMETALLIC (1) 399-5	
					TUBE,NONMETALLIC (1) 398-30	
					VALVE,CROSS (1) 399-2	
					VALVE,VENT (1) 399-18	
					WASHER,FLAT (2) 400-12	
					WASHER,FLAT (2) 398-21	
					WASHER,FLAT (2) 398-9	
					WASHER,FLAT (2) 398-4	
					WASHER,FLAT (8) 399-14	
					WASHER,FLAT (6) 398-23	
					WASHER,FLAT (2) 398-26	

(1) ITEM NO	(2) SMR CODE	(3) NSN	(4) CAGEC	(5) PART NUMBER	(6) DESCRIPTION AND USABLE ON CODES(UOC)	(7) QTY
					WASHER,FLAT (16) 398-17	
					WASHER,LOCK (2) 398-12	

END OF FIGURE

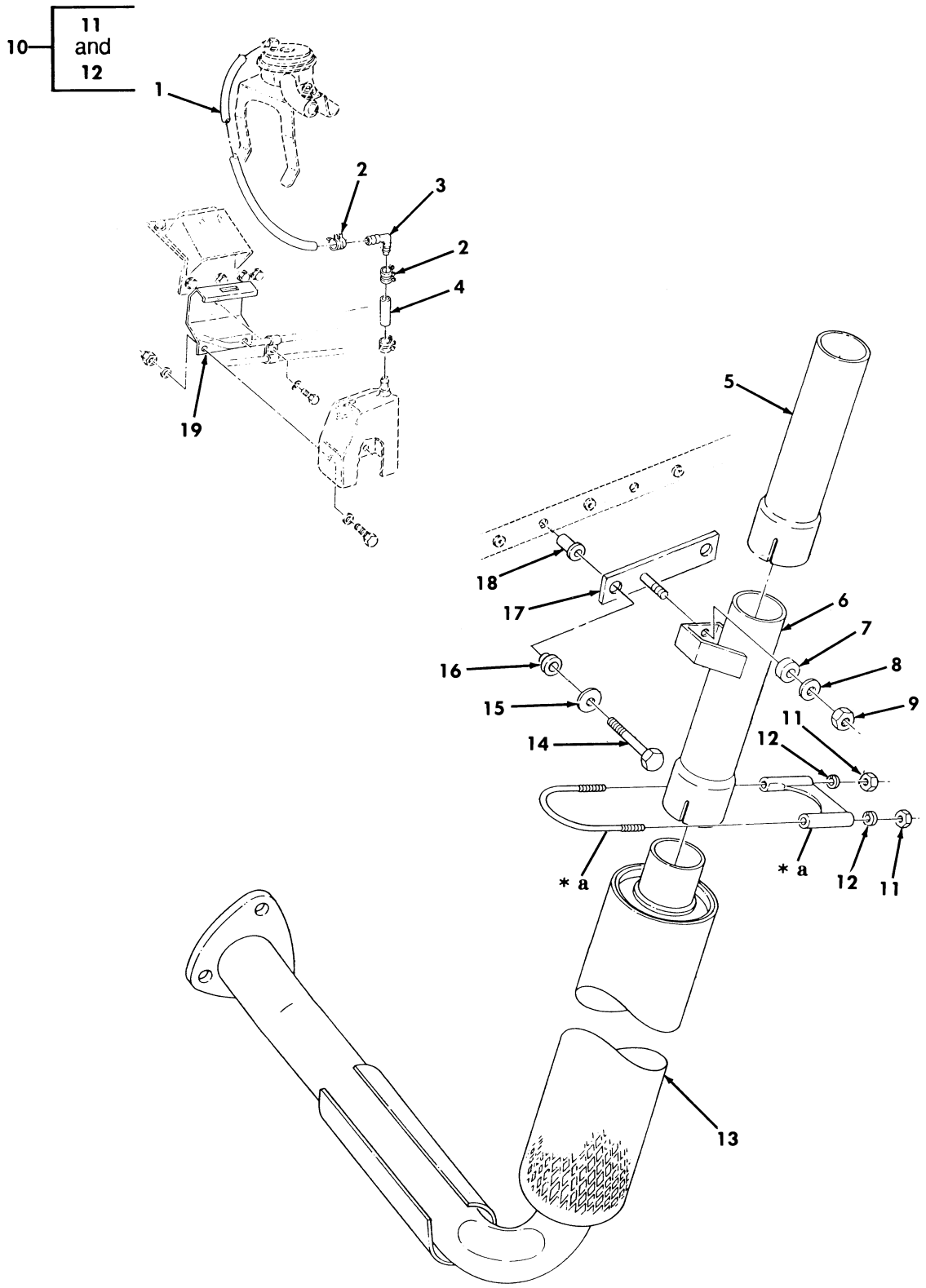

* a PART OF ITEM 10

Figure 401. Supplemental Deep Water Fording Kit.

(1) ITEM NO	(2) SMR CODE	(3) NSN	(4) CAGEC	(5) PART NUMBER	(6) DESCRIPTION AND USABLE ON CODES(UOC)	(7) QTY
					GROUP 3305 DEEP WATER FORDING KITS	
					FIG. 401 SUPPLEMENTAL DEEP WATER FORDING KIT	
1	MOOZZ		19207	12339981-5	HOSE,NONMETALLIC MAKE FROM HOSE, P/N 208-4, 42 INCHES LONG PART OF KIT P/N 5705703..... UOC:A15,B15,H15	1
2	PAOZA	4730002678945	81348	WW-C-440B TYPE E 1/2	CLAMP,HOSE PART OF KIT P/N 5705703.. UOC:A15,B15,H15	2
3	PAOZZ	4730012984363	61424	P4EUB-4	ELBOW,HOSE PART OF KIT P/N 5705703.. UOC:A15,B15,H15	1
4	MOOZZ		19207	12339981-6	HOSE,NONMETALLIC MAKE FROM HOSE,P/N 208-4, 2 INCHES LONG PART OF KIT P/N 5705703..... UOC:A15,B15,H15	1
5	PAOZZ	2990013858988	19207	12342567-2	PIPE,EXHAUST PART OF KIT P/N 5705703 UOC:A15,B15,H15	1
6	PAOZZ	2990013828796	19207	12342566	PIPE,EXHAUST PART OF KIT P/N 5705703 UOC:A15,B15,H15	1
7	PAOZZ	5365013811783	19207	12342569	SPACER,SLEEVE PART OF KIT P/N 5705703..... UOC:A15,B15,H15	1
8	PAOZZ	5310000877493	81495	330 2000	WASHER,FLAT 5/16 PART OF KIT P/N 5705703..... UOC:A15,B15,H15	1
9	PAOZZ	5310008140673	96906	MS51943-33	NUT,SELF-LOCKING,HE 5/16-18 PART OF KIT P/N 5705703..... UOC:A15,B15,H15	1
10	PAOZZ	5340013832397	19207	12338343-3	CLAMP,LOOP PART OF KIT P/N 5705703.. UOC:A15,B15,H15	2
11	PAOZZ	5310007320558	96906	MS51967-8	.NUT,PLAIN,HEXAGON 3/8-16..... UOC:A15,B15,H15	2
12	PAOZZ	5310006379541	81718	H2525M	.WASHER,LOCK 3/8..... UOC:A15,B15,H15	2
13	PAOZZ	2990012998820	34623	12342565	PIPE,EXHAUST PART OF KIT P/N 5705703 UOC:A15,B15,H15	1
14	PAOZZ	5305000712236	96906	MS90725-15	SCREW,CAP,HEXAGON H 1/4-20 X 2.25 PART OF KIT P/N 5705703..... UOC:A15,B15,H15	2
15	PAOZZ	5310001670893	88044	AN8013-2	WASHER,FLAT PART OF KIT P/N 5705703. UOC:A15,B15,H15	2
16	PAOZZ	2990013835689	34623	12341027	HANGER,ENGINE EXHAU PART OF KIT P/N 5705703..... UOC:A15,B15,H15	2
17	PAOZZ	5340013812045	19207	12342795	BRACKET,MOUNTING PART OF KIT P/N 5705703..... UOC:A15,B15,H15	1
18	PAOZZ	4931012028692	19207	12339998-13	PLUSNUT PART OF KIT P/N 5705703..... UOC:A15,B15,H15	2
19	PAOZZ	5340013811266	19207	12341641	STRAP,RETAINING PART OF KIT P/N 5705703.....	1

(1) ITEM NO	(2) SMR CODE	(3) NSN	(4) CAGEC	(5) PART NUMBER	(6) DESCRIPTION AND USABLE ON CODES(UOC)	(7) QTY
					UOC:A15,B15,H15	
KIT	PDOZZ	2540013208731	19207	5705703	MODIFICATION KIT,VE.....	1
					UOC:A15,B15,H15	
					BRACKET,MOUNTING (1) 401-17	
					CLAMP,HOSE (2) 401-2	
					CLAMP,LOOP (2) 401-10	
					ELBOW,HOSE (1) 401-3	
					HANGER,ENGINE EXHAU(2) 401-16	
					HOSE,NONMETALLIC (1) 401-1	
					HOSE,NONMETALLIC (1) 401-4	
					NUT,SELF-LOCKING,HE(1) 401-9	
					PIPE,EXHAUST (1) 401-5	
					PIPE,EXHAUST (1) 401-6	
					PIPE,EXHAUST (1) 401-13	
					PLUSNUT (2) 401-18	
					SCREW,CAP,HEXAGON H(2) 401-14	
					SPACER,SLEEVE (1) 401-7	
					STRAP,RETAINING (1) 401-19	
					WASHER,FLAT (1) 401-8	
					WASHER,FLAT (2) 401-15	

END OF FIGURE

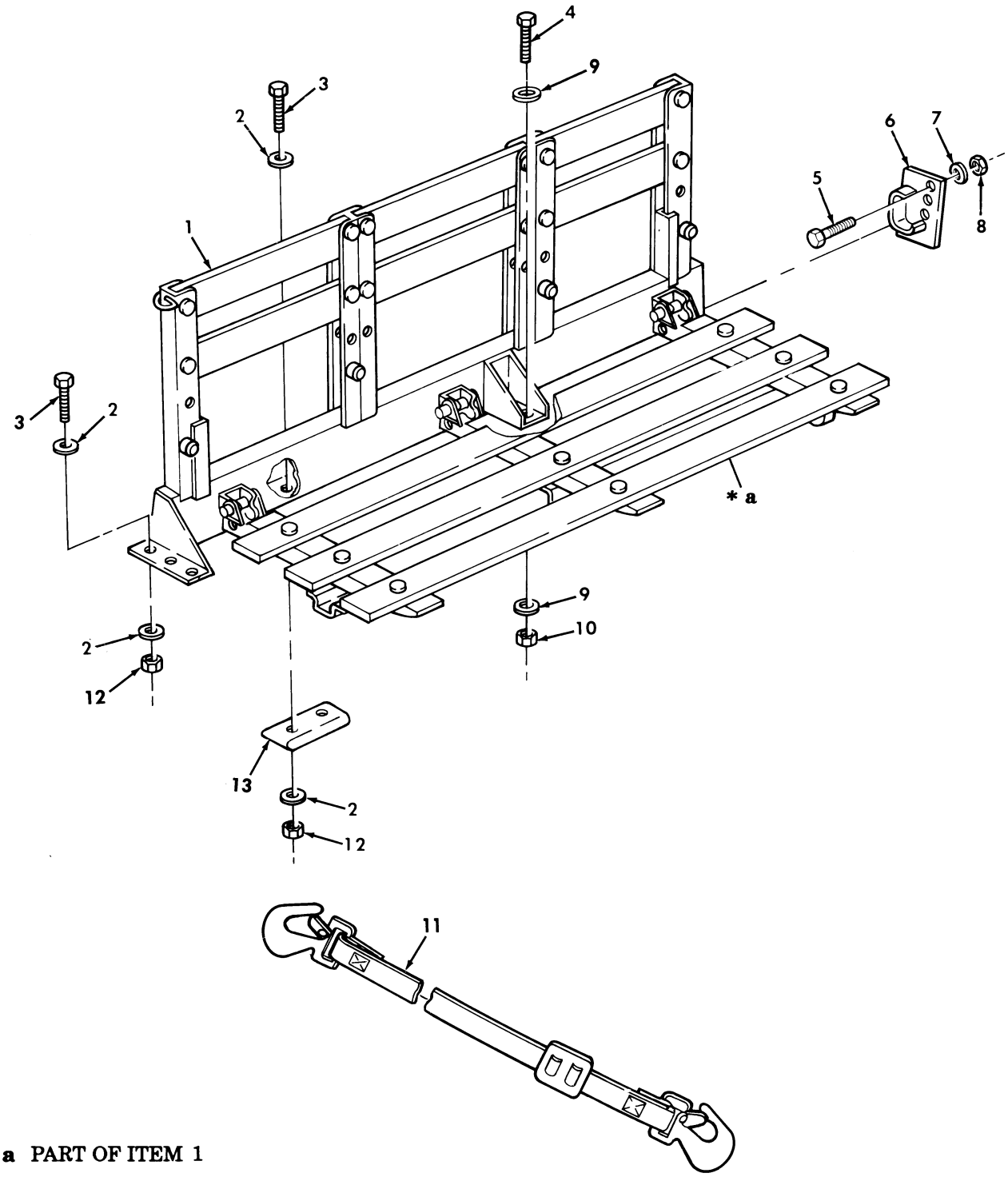

* a PART OF ITEM 1

Figure 402. Troop Seat Kit, Safety Strap, and Mounting Hardware.

(1) ITEM NO	(2) SMR CODE	(3) NSN	(4) CAGEC	(5) PART NUMBER	(6) DESCRIPTION AND USABLE ON CODES(UOC)	(7) QTY
					GROUP 3307 SPECIAL PURPOSE KITS	
					FIG. 402 TROOP SEAT KIT,SAFETY STRAP ,AND MOUNTING HARDWARE	
1	PAOOO	2540011858016	19207	12340560-1	SEAT,VEHICULAR L.H.,GREEN,PART OF KIT P/N 12338105..... UOC:AVY,A13,A14,BVY,HPM,HVY,H13,H14, KTV,NNN	1
1	PAOOO	2540011853214	19207	12340560-2	SEAT,VEHICULAR R.H.,GREEN,PART OF KIT P/N 12338105..... UOC:AVY,A13,A14,BVY,HPM,HVY,H13,H14, KTV,NNN	1
1	PAOOO	2540013967759	19207	12340560-3	SEAT,VEHICUALR L.H.,TAN,PART OF KIT P/N 57K0216..... UOC:AVY,A13,A14,BVY,HPM,HVY,H13,H14, KTV,NNN	1
1	PAOOO	2540013990785	19207	12340560-4	SEAT,VEHICULAR R.H.,TAN,PART OF KIT P/N 57K0216..... UOC:AVY,A13,A14,BVY,HPM,HVY,H13,H14, KTV,NNN	1
1	PAOOO	2540013967756	19207	12340560-5	SEAT,VEHICULAR L.H.,WHITE,PART OF KIT P/N 57K0220..... UOC:AVY,A13,A14,BVY,HPM,HVY,H13,H14, KTV,NNN	1
1	PAOOO	2540013967757	19207	12340560-6	SEAT,VEHICULAR R.H.,WHITE,PART OF KIT P/N 57K0220..... UOC:AVY,A13,A14,BVY,HPM,HVY,H13,H14, KTV,NNN	1
2	PAOZZ	5310008094058	96906	MS27183-10	WASHER,FLAT 1/4..... UOC:AVY,A13,A14,BVY,HPM,HVY,H13,H14, KTV,NNN	36
3	PAOZZ	5305000180024	96906	MS35297-10	SCREW,CAP,HEXAGON H 1/4-20 X 1.25.. UOC:AVY,A13,A14,BVY,HPM,HVY,H13,H14, KTV,NNN	18
4	PAOZZ	5305013157066	24617	453719	SCREW,CAP,HEXAGON H 7/16-20 X 3/4, PART OF KIT P/N 12338105,PART OF KIT P/N 57K0216,PART OF KIT P/N 57K0220. UOC:AVY,A13,A14,BVY,HPM,HVY,H13,H14, KTV,NNN	4
5	PAOZZ	5306002258499	96906	MS90725-34	BOLT,MACHINE 5/16-18 X 1.00,PART OF KIT P/N 12338105,PART OF KIT P/N 57K0216,PART OF KIT P/N 57K0220..... UOC:AVY,A13,A14,BVY,HPM,HVY,H13,H14, KTV,NNN	6
6	PAOZZ	2540013949682	19207	12340542-1	SUPPORT,SEAT,VEHICU L.H.,GREEN,PART OF KIT P/N 12338105..... UOC:AVY,A13,A14,BVY,HPM,HVY,H13,H14, KTV,NNN	1
6	PAOZZ	2540013949683	19207	12340542-2	SUPPORT,SEAT,VEHICU R.H.,GREEN,PART OF KIT P/N 12338105..... UOC:AVY,A13,A14,BVY,HPM,HVY,H13,H14, KTV,NNN	1

(1) ITEM NO	(2) SMR CODE	(3) NSN	(4) CAGEC	(5) PART NUMBER	(6) DESCRIPTION AND USABLE ON CODES(UOC)	(7) QTY
6	PAOZZ	2540013944788	19207	12340542-3	SUPPORT,SEAT,VEHICU L.H.,TAN,PART OF KIT P/N 57K0216..... UOC:AVY,A13,A14,BVY,HPM,HVY,H13,H14, KTV,NNN	1
6	PAOZZ	2540013944787	19207	12340542-4	SUPPORT,SEAT,VEHICU R.H.,TAN,PART OF KIT P/N 57K0216..... UOC:AVY,A13,A14,BVY,HPM,HVY,H13,H14, KTV,NNN	1
6	PAOZZ	2540013944792	19207	12340542-5	SUPPORT,SEAT,VEHICU L.H.,WHITE,PART OF KIT P/N 57K0220..... UOC:AVY,A13,A14,BVY,HPM,HVY,H13,H14, KTV,NNN	1
6	PAOZZ	2540013949679	19207	12340542-6	SUPPORT,SEAT,VEHICU R.H.,WHITE,PART OF KIT P/N 57K0220..... UOC:AVY,A13,A14,BVY,HPM,HVY,H13,H14, KTV,NNN	1
7	PAOZZ	5310000814219	96906	MS27183-12	WASHER,FLAT 5/16..... UOC:AVY,A13,A14,BVY,HPM,HVY,H13,H14, KTV,NNN	6
8	PAOZZ	5310002416658	96906	MS51943-34	NUT,SELF-LOCKING,HE 5/16-18,PART OF KIT P/N 12338105,PART OF KIT P/N 57K0216,PART OF KIT P/N 57K0220..... UOC:AVY,A13,A14,BVY,HPM,HVY,H13,H14, KTV,NNN	6
9	PAOZZ	5310008094085	96906	MS27183-16	WASHER,FLAT 7/16,PART OF KIT P/N 12338105,PART OF KIT P/N 57K0216, PART OF KIT P/N 57K0220..... UOC:AVY,A13,A14,BVY,HPM,HVY,H13,H14, KTV,NNN	8
10	PAOZZ	5310013153403	24617	9422300	NUT,PLAIN,HEXAGON 7/16-20,PART OF KIT P/N 12338105,PART OF KIT P/N 57K0216,PART OF KIT P/N 57K0220..... UOC:AVY,A13,A14,BVY,HPM,HVY,H13,H14, KTV,NNN	4
11	PAOZZ	5340011147712	19207	11682088-1	STRAP,WEBBING PART OF KIT P/N 12338105,PART OF KIT P/N 57K0216, PART OF KIT P/N 57K0220..... UOC:AVY,A13,A14,BVY,HPM,HVY,H13,H14, KTV,NNN	1
12	PAOZZ	5310000614650	96906	MS51943-31	NUT,SELF-LOCKING,HE 1/4-20,PART OF KIT P/N 12338105,PART OF KIT P/N 57K0216,PART OF KIT P/N 57K0220..... UOC:AVY,A13,A14,BVY,HPM,HVY,H13,H14, KTV,NNN	18
13	PFOZZ	5340012559510	19207	12339009	PLATE,MENDING..... UOC:AVY,A13,A14,BVY,HPM,HVY,H13,H14, KTV,NNN	6
KIT	PDOZZ	2540011853216	19207	12338105	PARTS KIT,SEAT GREEN..... UOC:AVY,A13,A14,BVY,HPM,HVY,H13,H14, KTV,NNN	1
					BOLT,MACHINE (6) 402-5	
					NUT,PLAIN,HEXAGON (4) 402-10	
					NUT,SELF-LOCKING,HE(6) 402-8	

(1) ITEM NO	(2) SMR CODE	(3) NSN	(4) CAGEC	(5) PART NUMBER	(6) DESCRIPTION AND USABLE ON CODES(UOC)	(7) QTY
					NUT,SELF-LOCKING,HE(18) 402-12	
					SCREW,CAP,HEXAGON H(4) 402-4	
					SEAT,VEHICULAR (1) 402-1	
					SEAT,VEHICULAR (1) 402-1	
					STRAP,WEBBING (1) 402-11	
					SUPPORT,SEAT,VEHICU(1) 402-6	
					SUPPORT,SEAT,VEHICU(1) 402-6	
					WASHER,FLAT (8) 402-9	
KIT	PDOZZ	2540013388081	19207	57K0216	PARTS KIT,SEAT TAN.....	1
					UOC:AVY,A13,A14,BVY,HPM,HVY,H13,H14, KTV,NNN	
					BOLT,MACHINE (6) 402-5	
					NUT,PLAIN,HEXAGON (4) 402-10	
					NUT,SELF-LOCKING,HE(6) 402-8	
					NUT,SELF-LOCKING,HE(18) 402-12	
					SCREW,CAP,HEXAGON H(4) 402-4	
					SEAT,VEHICULAR (1) 402-1	
					SEAT,VEHICULAR (1) 402-1	
					STRAP,WEBBING (1) 402-11	
					SUPPORT,SEAT,VEHICU(1) 402-6	
					SUPPORT,SEAT,VEHICU(1) 402-6	
					WASHER,FLAT (8) 402-9	
KIT	PDOZZ	2540013958771	19207	57K0220	PARTS KIT,SEAT WHITE.....	1
					UOC:AVY,A13,A14,BVY,HPM,HVY,H13,H14, KTV,NNN	
					BOLT,MACHINE (6) 402-5	
					NUT,PLAIN,HEXAGON (4) 402-10	
					NUT,SELF-LOCKING,HE(6) 402-8	
					NUT,SELF-LOCKING,HE(18) 402-12	
					SCREW,CAP,HEXAGON H(4) 402-4	
					SEAT,VEHICULAR (1) 402-1	
					SEAT,VEHICULAR (1) 402-1	
					STRAP,WEBBING (1) 402-11	
					SUPPORT,SEAT,VEHICU(1) 402-6	
					SUPPORT,SEAT,VEHICU(1) 402-6	
					WASHER,FLAT (8) 402-9	

END OF FIGURE

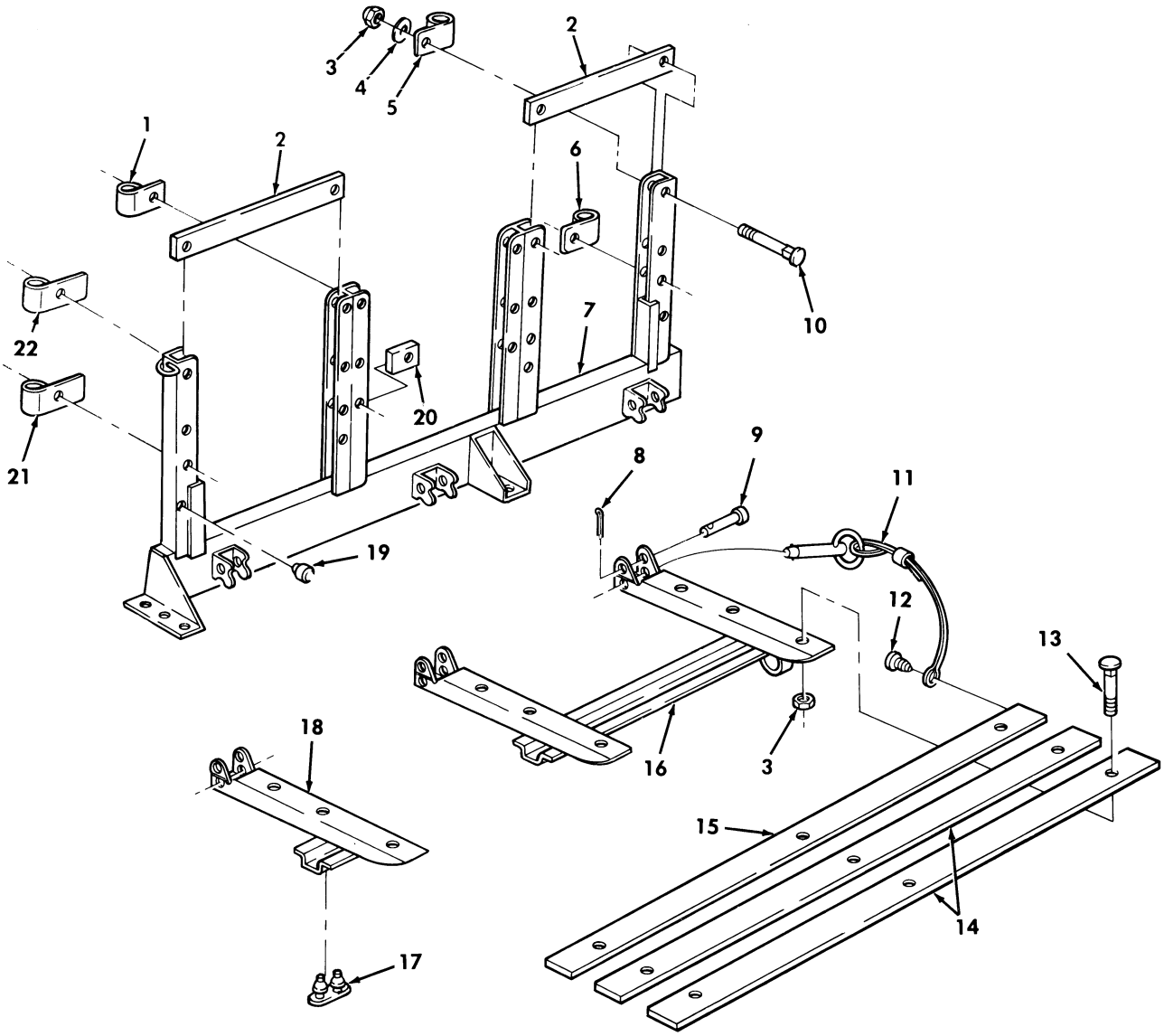

Figure 403. Troop Seat Assembly, Left and Right.

(1) ITEM NO	(2) SMR CODE	(3) NSN	(4) CAGEC	(5) PART NUMBER	(6) DESCRIPTION AND USABLE ON CODES(UOC)	(7) QTY
					GROUP 3307 SPECIAL PURPOSE KITS	
					FIG. 403 TROOP SEAT ASSEMBLY,LEFT AND RIGHT	
1	PAOZZ	2540011929712	34623	5578466	RETAINER ASSEMBLY,B USE ON L.H. SIDE RACK ASSY..... UOC:AVY,A13,A14,BVY,HPM,HVY,H13,H14, KTV,NNN	2
1	PAOZZ	2540011929713	19207	12340545-2	RETAINER ASSEMBLY,B USE ON R.H. SIDE RACK ASSY..... UOC:AVY,A13,A14,BVY,HPM,HVY,H13,H14, KTV,NNN	2
2	PAOZZ	2540011857951	19207	12340544	BOARD SEAT ..... UOC:AVY,A13,A14,BVY,HPM,HVY,H13,H14, KTV,NNN	12
3	PAOZZ	5310009334310	24617	271184	NUT,PLAIN ASSEMBLED 5/16-18..... UOC:AVY,A13,A14,BVY,HPM,HVY,H13,H14, KTV,NNN	50
4	PAOZZ	5310012520512	34623	5592832	WASHER,FLAT 5/16..... UOC:AVY,A13,A14,BVY,HPM,HVY,H13,H14, KTV,NNN	32
5	PFOZZ	2540011929711	19207	12340546-1	RETAINER,BOW,VEHICU..... UOC:AVY,A13,A14,BVY,HPM,HVY,H13,H14, KTV,NNN	3
6	PAOZZ	2540011929712	34623	5578466	RETAINER ASSEMBLY,B USE ON R.H. SIDE RACK ASSY..... UOC:AVY,A13,A14,BVY,HPM,HVY,H13,H14, KTV,NNN	1
6	PAOZZ	2540011929713	19207	12340545-2	RETAINER ASSEMBLY,B USE ON L.H. SIDE RACK ASSY..... UOC:AVY,A13,A14,BVY,HPM,HVY,H13,H14, KTV,NNN	1
7	XAOZZ		34623	5591333	CHANNEL ASSEMBLY R.H..... UOC:AVY,A13,A14,BVY,HPM,HVY,H13,H14, KTV,NNN	1
7	XAOZZ		34623	5591334	CHANNEL ASSEMBLY L.H..... UOC:AVY,A13,A14,BVY,HPM,HVY,H13,H14, KTV,NNN	1
8	PAOZZ	5315012677570	96906	MS24665-319	PIN,COTTER 3/32 X 1.00..... UOC:AVY,A13,A14,BVY,HPM,HVY,H13,H14, KTV,NNN	6
9	PAOZZ	5315007370134	19207	7370134	PIN,STRAIGHT,HEADED 3/8 X 2.00..... UOC:AVY,A13,A14,BVY,HPM,HVY,H13,H14, KTV,NNN	6
10	PAOZZ	5306000120231	96906	MS35751-44	BOLT,SQUARE NECK 5/16-18 X 1.75.... UOC:AVY,A13,A14,BVY,HPM,HVY,H13,H14, KTV,NNN	32
11	PAOZZ	5315010949025	19207	12255608	PIN,QUICK RELEASE..... UOC:AVY,A13,A14,BVY,HPM,HVY,H13,H14, KTV,NNN	2
12	PAOZZ	5305004324170	96906	MS51861-35	SCREW,TAPPING #8-18 X 1/2..... UOC:AVY,A13,A14,BVY,HPM,HVY,H13,H14,	2

(1) ITEM NO	(2) SMR CODE	(3) NSN	(4) CAGEC	(5) PART NUMBER	(6) DESCRIPTION AND USABLE ON CODES(UOC)	(7) QTY
					KTV,NNN	
13	PAOZZ	5306007536996	96906	MS35751-43	BOLT,SQUARE NECK 5/16-18 X 1.50.... UOC:AVY,A13,A14,BVY,HPM,HVY,H13,H14, KTV,NNN	18
14	PAOZZ	2540011858015	19207	12340553	BOARD SEAT ..... UOC:AVY,A13,A14,BVY,HPM,HVY,H13,H14, KTV,NNN	4
15	PFOZZ	2540011924501	19207	12340549	SEAT,VEHICULAR..... UOC:AVY,A13,A14,BVY,HPM,HVY,H13,H14, KTV,NNN	2
16	XAOZZ		19207	12340562-1	CHANNEL ASSEMBLY L.H..... UOC:AVY,A13,A14,BVY,HPM,HVY,H13,H14, KTV,NNN	1
16	XAOZZ		19207	12340562-2	CHANNEL ASSEMBLY R.H..... UOC:AVY,A13,A14,BVY,HPM,HVY,H13,H14, KTV,NNN	1
17	PAOZZ	5340011968028	19207	12339961-1	BUMPER,NONMETALLIC..... UOC:AVY,A13,A14,BVY,HPM,HVY,H13,H14, KTV,NNN	6
18	PFOZZ	2540013344333	34623	5588656	SUPPORT,SEAT,VEHICU REAR..... UOC:AVY,A13,A14,BVY,HPM,HVY,H13,H14, KTV,NNN	2
19	PAOZZ	5340011962573	34623	5584977	BUMPER,NONMETALLIC..... UOC:AVY,A13,A14,BVY,HPM,HVY,H13,H14, KTV,NNN	4
20	PAOZZ	5365011934479	34623	5584999	SPACER..... UOC:AVY,A13,A14,BVY,HPM,HVY,H13,H14, KTV,NNN	4
21	PFOZZ	2540011929715	19207	12340535-1	RETAINER ASSEMBLY,B L.H..... UOC:AVY,A13,A14,BVY,HPM,HVY,H13,H14, KTV,NNN	1
21	PFOZZ	2540011929714	19207	12340535-2	RETAINER ASSEMBLY,B R.H..... UOC:AVY,A13,A14,BVY,HPM,HVY,H13,H14, KTV,NNN	1
22	PAOZZ	2540011932711	19207	12340536-1	RETAINER,BOW,VEHICU..... UOC:AVY,A13,A14,BVY,HPM,HVY,H13,H14, KTV,NNN	1

END OF FIGURE

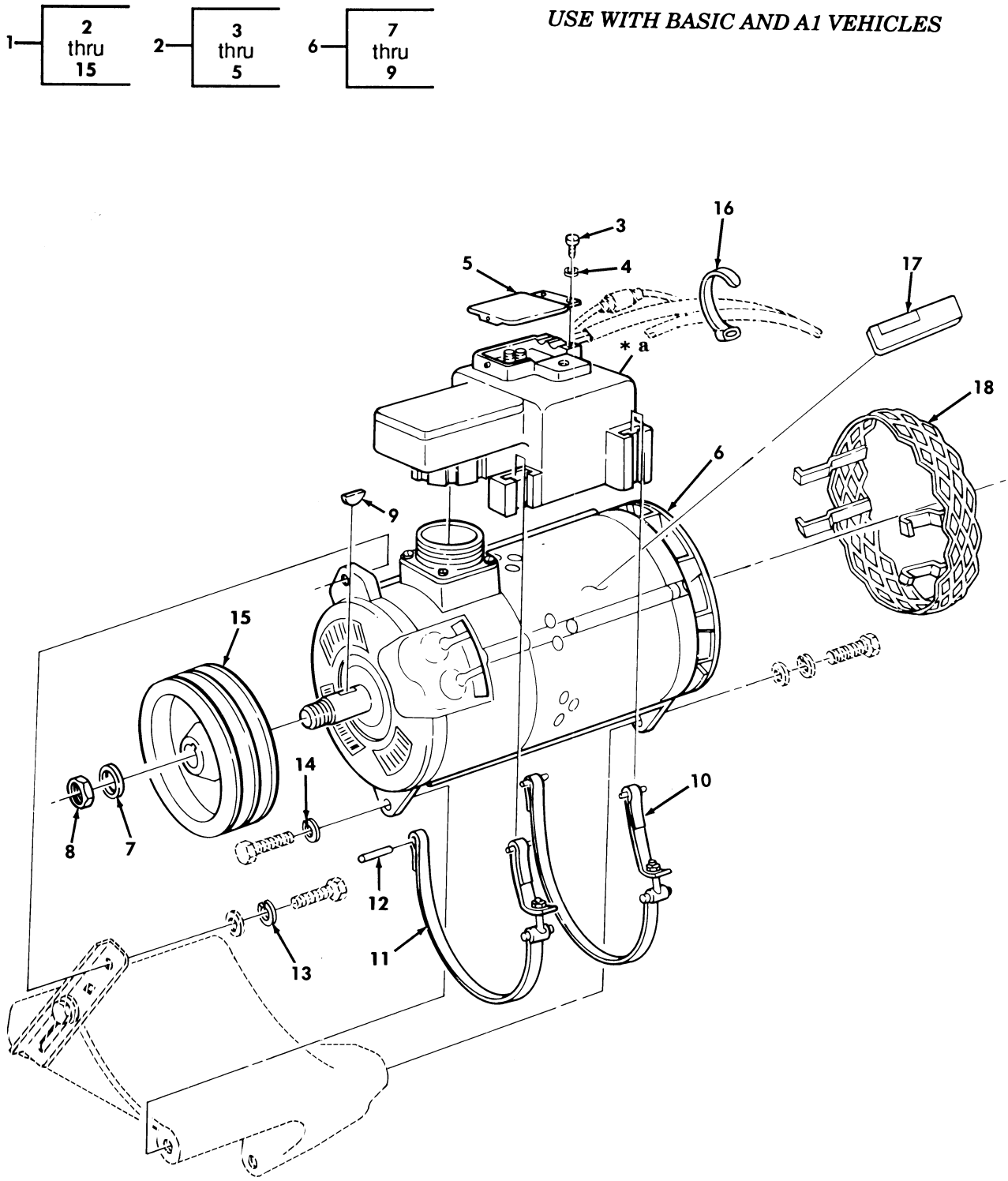

* a PART OF ITEM 2

Figure 404. Alternator, 100 AMP Kit (PRESTOLITE).

(1) ITEM NO	(2) SMR CODE	(3) NSN	(4) CAGEC	(5) PART NUMBER	(6) DESCRIPTION AND USABLE ON CODES(UOC)	(7) QTY
					GROUP 3307 SPECIAL PURPOSE KITS	
					FIG. 404 ALTERNATOR,100 AMP KIT (PRESTOLITE)	
1	AOOFF		19207	12340912	ALTERNATOR,ENGINE PART OF KIT P/N 5705687..... UOC:A11,A13,A14,A20,A24,A25,A26,A27, B17,B18,H11,H13,H14,H17,H18,H20,H21, H24,H25,H26,H27,H28,MMM	1
2	PAOZZ	2920011992391	35510	R027096300	.REGULATOR,ENGINE GE..... UOC:A11,A13,A14,A20,A24,A25,A26,A27, B17,B18,H11,H13,H14,H17,H18,H20,H21, H24,H25,H26,H27,H28,MMM	1
3	PAOZZ	5305009896265	96906	MS35207-262	..SCREW,MACHINE #10-32 X 7/16..... UOC:A11,A13,A14,A20,A24,A25,A26,A27, B17,B18,H11,H13,H14,H17,H18,H20,H21, H24,H25,H26,H27,H28,MMM	2
4	PAOZZ	5310011629661	35510	36896	..WASHER,LOCK #10..... UOC:A11,A13,A14,A20,A24,A25,A26,A27, B17,B18,H11,H13,H14,H17,H18,H20,H21, H24,H25,H26,H27,H28,MMM	2
5	PAOZZ	2920010785769	35510	78403	..COVER,CAPACITOR,GEN..... UOC:A11,A13,A14,A20,A24,A25,A26,A27, B17,B18,H11,H13,H14,H17,H18,H20,H21, H24,H25,H26,H27,H28,MMM	1
6	PAOFF	2920011902709	19207	10947517-2	.GENERATOR,ENGINE AC..... UOC:A11,A13,A14,A20,A24,A25,A26,A27, B17,B18,H11,H13,H14,H17,H18,H20,H21, H24,H25,H26,H27,H28,MMM	1
7	PAOZZ	5310001670826	88044	AN960-1216	..WASHER,FLAT 3/4..... UOC:A11,A13,A14,A20,A24,A25,A26,A27, B17,B18,H11,H13,H14,H17,H18,H20,H21, H24,H25,H26,H27,H28,MMM	1
8	PAOZZ	5310009390783	96906	MS21083N12	..NUT,SELF-LOCKING,HE 3/4-16..... UOC:A11,A13,A14,A20,A24,A25,A26,A27, B17,B18,H11,H13,H14,H17,H18,H20,H21, H24,H25,H26,H27,H28,MMM	1
9	PAOZZ	5315006165529	96906	MS35756-16	..KEY,WOODRUFF..... UOC:A11,A13,A14,A20,A24,A25,A26,A27, B17,B18,H11,H13,H14,H17,H18,H20,H21, H24,H25,H26,H27,H28,MMM	1
10	PAOZZ	2920011992395	35510	A040096268	.PARTS KIT,ENGINE GE..... UOC:A11,A13,A14,A20,A24,A25,A26,A27, B17,B18,H11,H13,H14,H17,H18,H20,H21, H24,H25,H26,H27,H28,MMM	1
11	PAOZZ	2920011992394	35510	A040096267	.PARTS KIT,ENGINE GE..... UOC:A11,A13,A14,A20,A24,A25,A26,A27, B17,B18,H11,H13,H14,H17,H18,H20,H21, H24,H25,H26,H27,H28,MMM	1
12	PAOZZ	5315013335117	35510	96309	.PIN,STRAIGHT,HEADLE..... UOC:A11,A13,A14,A20,A24,A25,A26,A27, B17,B18,H11,H13,H14,H17,H18,H20,H21,	4

(1) ITEM NO	(2) SMR CODE	(3) NSN	(4) CAGEC	(5) PART NUMBER	(6) DESCRIPTION AND USABLE ON CODES(UOC)	(7) QTY
					H24,H25,H26,H27,H28,MMM	
13	PAOZZ	5315006379541	96906	MS35338-46	.WASHER,LOCK PART OF KIT P/N 5705687 UOC:A11,A13,A14,A20,A24,A25,A26,A27, B17,B18,H11,H13,H14,H17,H18,H20,H21, H24,H25,H26,H27,H28,MMM	1
14	PAOZZ	5310002090965	96906	MS35338-47	.WASHER,LOCK PART OF KIT P/N 5705687 UOC:A11,A13,A14,A20,A24,A25,A26,A27, B17,B18,H11,H13,H14,H17,H18,H20,H21, H24,H25,H26,H27,H28,MMM	2
15	PAOZZ	3020012048132	19207	12339412	.PULLEY,GROOVE PART OF KIT P/N 5705687..... UOC:A11,A13,A14,A20,A24,A25,A26,A27, B17,B18,H11,H13,H14,H17,H18,H20,H21, H24,H25,H26,H27,H28,MMM	1
16	PAOZZ	5975012738133	96906	MS3367-3	STRAP,TIEDOWN,ELECT PART OF KIT P/N 5705687..... UOC:A11,A13,A14,A20,A24,A25,A26,A27, B17,B18,H11,H13,H14,H17,H18,H20,H21, H24,H25,H26,H27,H28,MMM	1
17	PAOZZ	7690011975500	19207	12339064	DECAL PART OF KIT P/N 5705687..... UOC:A11,A13,A14,A20,A24,A25,A26,A27, B17,B18,H11,H13,H14,H17,H18,H20,H21, H24,H25,H26,H27,H28,MMM	1
18	PAOZZ	4140013031338	34623	12341875	GUARD,FAN IMPELLER PART OF KIT P/N 5705687..... UOC:A11,A13,A14,A20,A24,A25,A26,A27, B17,B18,H11,H13,H14,H17,H18,H20,H21, H24,H25,H26,H27,H28,MMM	1
KIT	PDOFF	2920011992393	19207	5705687	PARTS KIT,ENGINE GE..... UOC:A11,A13,A14,A20,A24,A25,A26,A27, B17,B18,H11,H13,H14,H17,H18,H20,H21, H24,H25,H26,H27,H28,MMM	1
					ALTERNATOR,ENGINE (1) 404-1 DECAL (1) 404-17 GUARD,FAN (1) 404-18 PULLEY,GROOVE (1) 404-15 STRAP,TIEDOWN,ELECT(1) 404-16 WASHER,LOCK (1) 404-13 WASHER,LOCK (2) 404-14	

END OF FIGURE

USE WITH BASIC AND A1 VEHICLES

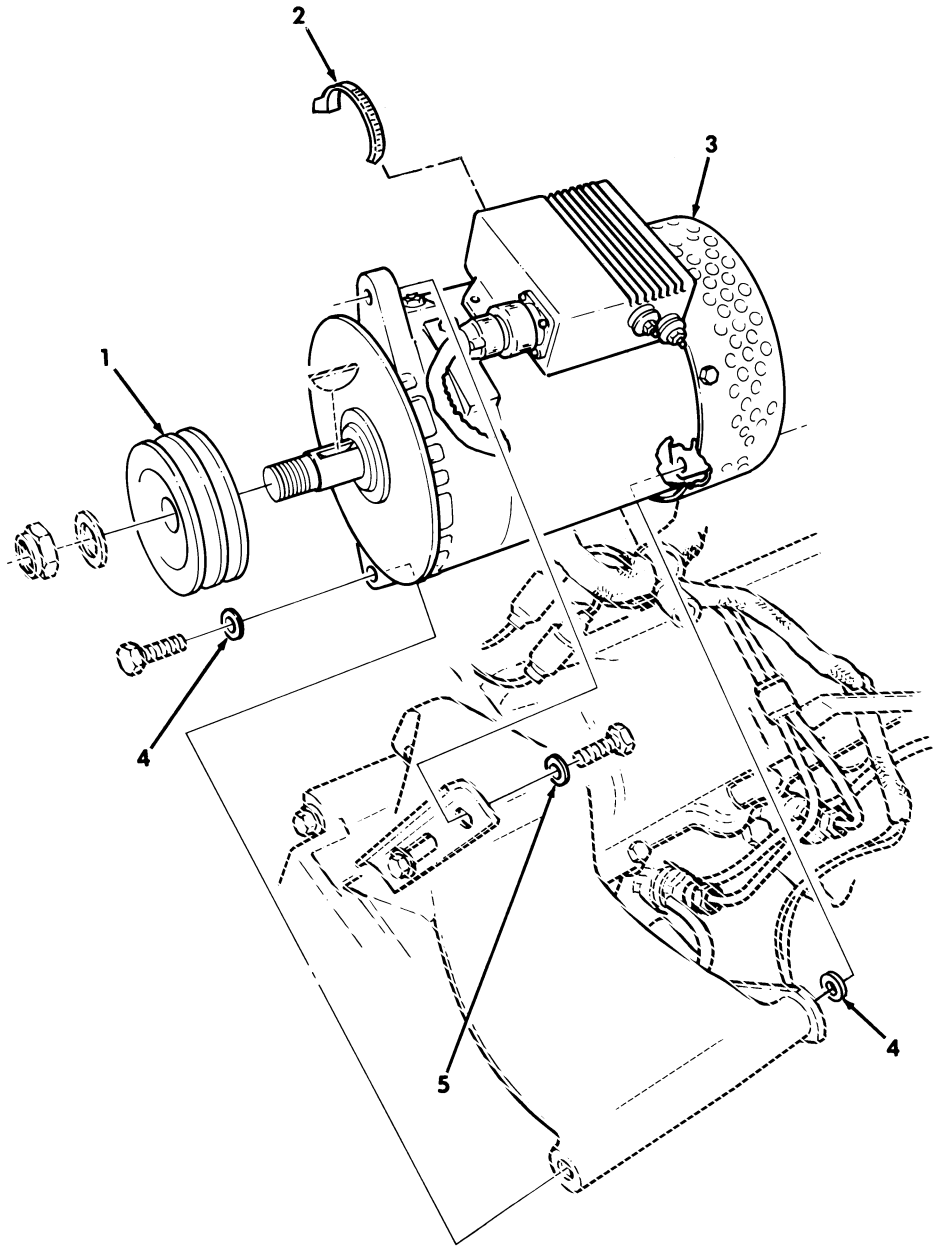

Figure 405. Alternator, 100 AMP Kit (NIEHOFF).

(1) ITEM NO	(2) SMR CODE	(3) NSN	(4) CAGEC	(5) PART NUMBER	(6) DESCRIPTION AND USABLE ON CODES(UOC)	(7) QTY
					GROUP 3307 SPECIAL PURPOSE KITS	
					FIG. 405 ALTERNATOR,100 AMP KIT (NIEHOFF)	
1	PAOZZ	3020012068132	19207	12339412	PULLEY,GROOVE PART OF KIT P/N 57K0254..... UOC:A11,A13,A14,A20,A24,A25,A26,A27, B17,B18,H11,H13,H14,H17,H18,H20,H21, H24,H25,H26,H27,H28,MMM	1
2	PAOZZ	5975004515001	96906	MS3367-3-9	STRAP,TIEDOWN,ELECT PART OF KIT P/N 57K0254..... UOC:A11,A13,A14,A20,A24,A25,A26,A27, B17,B18,H11,H13,H14,H17,H18,H20,H21, H24,H25,H26,H27,H28,MMM	1
3	PAOZZ	2920000000183	19207	12342944	GENERATOR,ENGINE PART OF KIT P/N 57K0254..... UOC:A11,A13,A14,A20,A24,A25,A26,A27, B17,B18,H11,H13,H14,H17,H18,H20,H21, H24,H25,H26,H27,H28,MMM	1
4	PAOZZ	5310002090965	96906	MS35338-47	WASHER,LOCK PART OF KIT P/B 57K0254 UOC:A11,A13,A14,A20,A24,A25,A26,A27, B17,B18,H11,H13,H14,H17,H18,H20,H21, H24,H25,H26,H27,H28,MMM	2
5	PAOZZ	5310006379541	96906	MS35338-46	WASHER,LOCK PART OF KIT P/N 57K0254 UOC:A11,A13,A14,A20,A24,A25,A26,A27, B17,B18,H11,H13,H14,H17,H18,H20,H21, H24,H25,H26,H27,H28,MMM	1
KIT	PDOZZ	2920013714030	19207	57K0254	PARTS KIT,ENGINE GE..... UOC:A11,A13,A14,A20,A24,A25,A26,A27, B17,B18,H11,H13,H14,H17,H18,H20,H21, H24,H25,H26,H27,H28,MMM	1
					GENERATOR,ENGINE (1) 405-3	
					PULLEY,GROOVE (1) 405-1	
					STRAP,TIEDOWN,ELECT(1) 405-2	
					WASHER,LOCK (2) 405-4	
					WASHER,LOCK (1) 405-5	

END OF FIGURE

USE WITH BASIC AND A1 VEHICLES

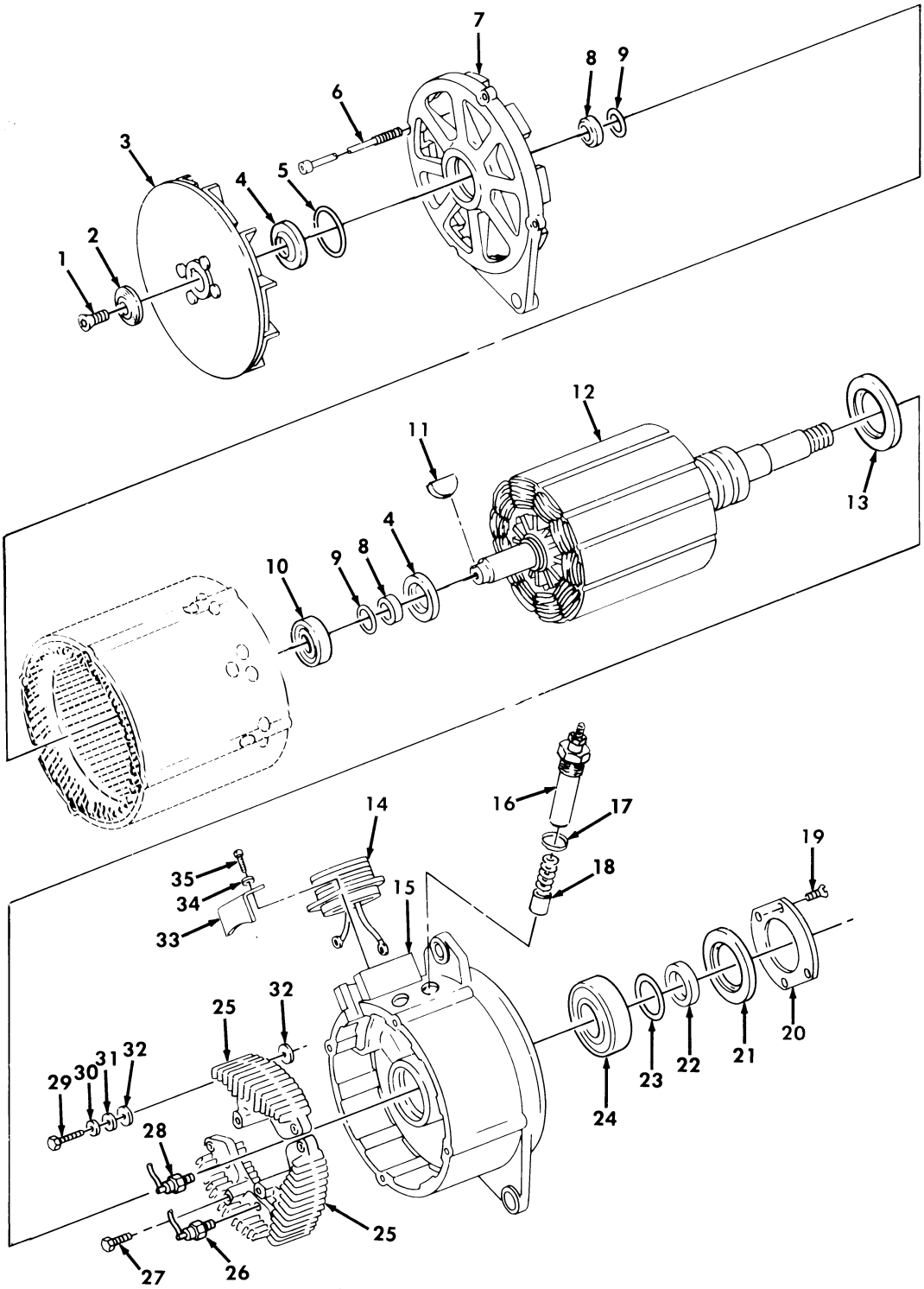

Figure 406. Alternator, 100 AMP (PRESTOLITE).

(1) ITEM NO	(2) SMR CODE	(3) NSN	(4) CAGEC	(5) PART NUMBER	(6) DESCRIPTION AND USABLE ON CODES(UOC)	(7) QTY
					GROUP 3307 SPECIAL PURPOSE KITS	
					FIG. 406 ALTERNATOR,100 AMP (PRESTOLITE)	
1	PAFZZ	5305004344811	35510	60253	SCREW,CAP,SOCKET HE..... UOC:A11,A13,A14,A20,A24,A25,A26,A27, B17,B18,H11,H13,H14,H17,H18,H20,H21, H24,H25,H26,H27,H28,MMM	1
2	PAFZZ	5310010810469	35510	71122	WASHER..... UOC:A11,A13,A14,A20,A24,A25,A26,A27, B17,B18,H11,H13,H14,H17,H18,H20,H21, H24,H25,H26,H27,H28,MMM	1
3	PAFZZ	2920001142942	35510	A041071121	FAN AND HUB ASSEMBL..... UOC:A11,A13,A14,A20,A24,A25,A26,A27, B17,B18,H11,H13,H14,H17,H18,H20,H21, H24,H25,H26,H27,H28,MMM	1
4	KFFZZ		19207	11646898	SEAL,SINGLE LIP PART OF KIT P/N 5703776-1..... UOC:A11,A13,A14,A20,A24,A25,A26,A27, B17,B18,H11,H13,H14,H17,H18,H20,H21, H24,H25,H26,H27,H28,MMM	2
5	PAFZZ	5331000525267	96906	MS9068-030	PACKING,PREFORMED PART OF KIT P/N 5703776-1..... UOC:A11,A13,A14,A20,A24,A25,A26,A27, B17,B18,H11,H13,H14,H17,H18,H20,H21, H24,H25,H26,H27,H28,MMM	1
6	PAFZZ	5305010809109	35510	Z1110-74821	SCREW,CAP,SOCKET HE..... UOC:A11,A13,A14,A20,A24,A25,A26,A27, B17,B18,H11,H13,H14,H17,H18,H20,H21, H24,H25,H26,H27,H28,MMM	4
7	PFFZZ	2920002283402	35510	71117	END BELL,ELECTRICAL..... UOC:A11,A13,A14,A20,A24,A25,A26,A27, B17,B18,H11,H13,H14,H17,H18,H20,H21, H24,H25,H26,H27,H28,MMM	1
8	PAFZZ	5365001439854	35510	71125	SPACER,SLEEVE..... UOC:A11,A13,A14,A20,A24,A25,A26,A27, B17,B18,H11,H13,H14,H17,H18,H20,H21, H24,H25,H26,H27,H28,MMM	2
9	KFFZZ		19207	11646803	PACKING,PREFORMED PART OF KIT P/N 5703776-1..... UOC:A11,A13,A14,A20,A24,A25,A26,A27, B17,B18,H11,H13,H14,H17,H18,H20,H21, H24,H25,H26,H27,H28,MMM	2
10	PAFZZ	3110003434474	19204	11646902	BEARING,BALL,ANNULA..... UOC:A11,A13,A14,A20,A24,A25,A26,A27, B17,B18,H11,H13,H14,H17,H18,H20,H21, H24,H25,H26,H27,H28,MMM	1
11	PAFZZ	5315000698996	35510	60249	KEY,MACHINE 5/32-1/4..... UOC:A11,A13,A14,A20,A24,A25,A26,A27, B17,B18,H11,H13,H14,H17,H18,H20,H21, H24,H25,H26,H27,H28,MMM	1
12	PFFZZ	2920001609346	35510	71127	ROTOR,GENERATOR.....	1

(1) ITEM NO	(2) SMR CODE	(3) NSN	(4) CAGEC	(5) PART NUMBER	(6) DESCRIPTION AND USABLE ON CODES(UOC)	(7) QTY
					UOC:A11,A13,A14,A20,A24,A25,A26,A27, B17,B18,H11,H13,H14,H17,H18,H20,H21, H24,H25,H26,H27,H28,MMM	
13	KFFZZ		19207	11646896	SEAL,SINGLE LIP PART OF KIT P/N 5703776-1..... UOC:A11,A13,A14,A20,A24,A25,A26,A27, B17,B18,H11,H13,H14,H17,H18,H20,H21, H24,H25,H26,H27,H28,MMM	1
14	PAFZZ	2920012515488	35510	95962	CONNECTOR,ALTERNA..... UOC:A11,A13,A14,A20,A24,A25,A26,A27, B17,B18,H11,H13,H14,H17,H18,H20,H21, H24,H25,H26,H27,H28,MMM	1
15	XAFZZ		35510	75824	END BELL,ELECTRICAL..... UOC:A11,A13,A14,A20,A24,A25,A26,A27, B17,B18,H11,H13,H14,H17,H18,H20,H21, H24,H25,H26,H27,H28,MMM	1
16	PAFZZ	2920009008163	35510	71116	HOLDER AND STUD ASS PART OF KIT P/N 5703776-1..... UOC:A11,A13,A14,A20,A24,A25,A26,A27, B17,B18,H11,H13,H14,H17,H18,H20,H21, H24,H25,H26,H27,H28,MMM	2
17	PAFZZ	5330008234881	35510	60198	PACKING,PREFORMED..... UOC:A11,A13,A14,A20,A24,A25,A26,A27, B17,B18,H11,H13,H14,H17,H18,H20,H21, H24,H25,H26,H27,H28,MMM	2
18	PAFZZ	5977010823613	19207	11646900	BRUSH,ELECTRICAL CO PART OF KIT P/N 5703776-1..... UOC:A11,A13,A14,A20,A24,A25,A26,A27, B17,B18,H11,H13,H14,H17,H18,H20,H21, H24,H25,H26,H27,H28,MMM	2
19	PAFZZ	5305006017729	35510	4465	SCREW,MACHINE #10-32 X 1/2..... UOC:A11,A13,A14,A20,A24,A25,A26,A27, B17,B18,H11,H13,H14,H17,H18,H20,H21, H24,H25,H26,H27,H28,MMM	4
20	PAFZZ	3110004511534	35510	59234	PLATE,RETAINING,BEA..... UOC:A11,A13,A14,A20,A24,A25,A26,A27, B17,B18,H11,H13,H14,H17,H18,H20,H21, H24,H25,H26,H27,H28,MMM	1
21	KFFZZ		19207	11646899	SEAL,SINGLE LIP PART OF KIT P/N 5703776-1..... UOC:A11,A13,A14,A20,A24,A25,A26,A27, B17,B18,H11,H13,H14,H17,H18,H20,H21, H24,H25,H26,H27,H28,MMM	1
22	PAFZZ	5365001657862	35510	71126	SPACER,RING..... UOC:A11,A13,A14,A20,A24,A25,A26,A27, B17,B18,H11,H13,H14,H17,H18,H20,H21, H24,H25,H26,H27,H28,MMM	1
23	KFFZZ		19207	11646804	PACKING,PREFORMED PART OF KIT P/N 5703776-1..... UOC:A11,A13,A14,A20,A24,A25,A26,A27, B17,B18,H11,H13,H14,H17,H18,H20,H21, H24,H25,H26,H27,H28,MMM	1
24	PAFZZ	3110003434477	19207	11646897	BEARING,BALL,ANNULA.....	1

(1) ITEM NO	(2) SMR CODE	(3) NSN	(4) CAGEC	(5) PART NUMBER	(6) DESCRIPTION AND USABLE ON CODES(UOC)	(7) QTY
					UOC:A11,A13,A14,A20,A24,A25,A26,A27, B17,B18,H11,H13,H14,H17,H18,H20,H21, H24,H25,H26,H27,H28,MMM	
25	PAFZZ	5961012605135	68505	A051074806	RECTIFIER,SEMICONDU..... UOC:A11,A13,A14,A20,A24,A25,A26,A27, B17,B18,H11,H13,H14,H17,H18,H20,H21, H24,H25,H26,H27,H28,MMM	3
26	PAFZZ	2920001142945	19207	11646901	RECTIFIER AND LEAD PART OF KIT P/N 5703776..... UOC:A11,A13,A14,A20,A24,A25,A26,A27, B17,B18,H11,H13,H14,H17,H18,H20,H21, H24,H25,H26,H27,H28,MMM	3
27	PAFZZ	5306011524849	35510	075884	BOLT,ASSEMBLED WASH 1/4-28 X 1/2... UOC:A11,A13,A14,A20,A24,A25,A26,A27, B17,B18,H11,H13,H14,H17,H18,H20,H21, H24,H25,H26,H27,H28,MMM	3
28	PAFZZ	2920001143370	35510	74808	RECTIFIER AND LEAD PART OF KIT P/N 5703776..... UOC:A11,A13,A14,A20,A24,A25,A26,A27, B17,B18,H11,H13,H14,H17,H18,H20,H21, H24,H25,H26,H27,H28,MMM	3
29	PAFZZ	5305012542511	35510	96470	SCREW,CAP,SOCKET HE #10-32..... UOC:A11,A13,A14,A20,A24,A25,A26,A27, B17,B18,H11,H13,H14,H17,H18,H20,H21, H24,H25,H26,H27,H28,MMM	6
30	PAFZZ	5310004821999	35510	36900	WASHER,LOCK..... UOC:A11,A13,A14,A20,A24,A25,A26,A27, B17,B18,H11,H13,H14,H17,H18,H20,H21, H24,H25,H26,H27,H28,MMM	6
31	PAFZZ	5310011629661	35510	36896	WASHER,LOCK #10..... UOC:A11,A13,A14,A20,A24,A25,A26,A27, B17,B18,H11,H13,H14,H17,H18,H20,H21, H24,H25,H26,H27,H28,MMM	6
32	PAFZZ	5970012535134	35510	96471	INSULATOR,WASHER..... UOC:A11,A13,A14,A20,A24,A25,A26,A27, B17,B18,H11,H13,H14,H17,H18,H20,H21, H24,H25,H26,H27,H28,MMM	12
33	PAFZZ	2920006539025	35510	36196	COVER,TERMINAL..... UOC:A11,A13,A14,A20,A24,A25,A26,A27, B17,B18,H11,H13,H14,H17,H18,H20,H21, H24,H25,H26,H27,H28,MMM	1
34	PAFZZ	5310000453299	96906	MS35338-42	WASHER,LOCK..... UOC:A11,A13,A14,A20,A24,A25,A26,A27, B17,B18,H11,H13,H14,H17,H18,H20,H21, H24,H25,H26,H27,H28,MMM	4
35	PAFZZ	5305010788929	35510	2295	SCREW,MACHINE..... UOC:A11,A13,A14,A20,A24,A25,A26,A27, B17,B18,H11,H13,H14,H17,H18,H20,H21, H24,H25,H26,H27,H28,MMM	4

END OF FIGURE

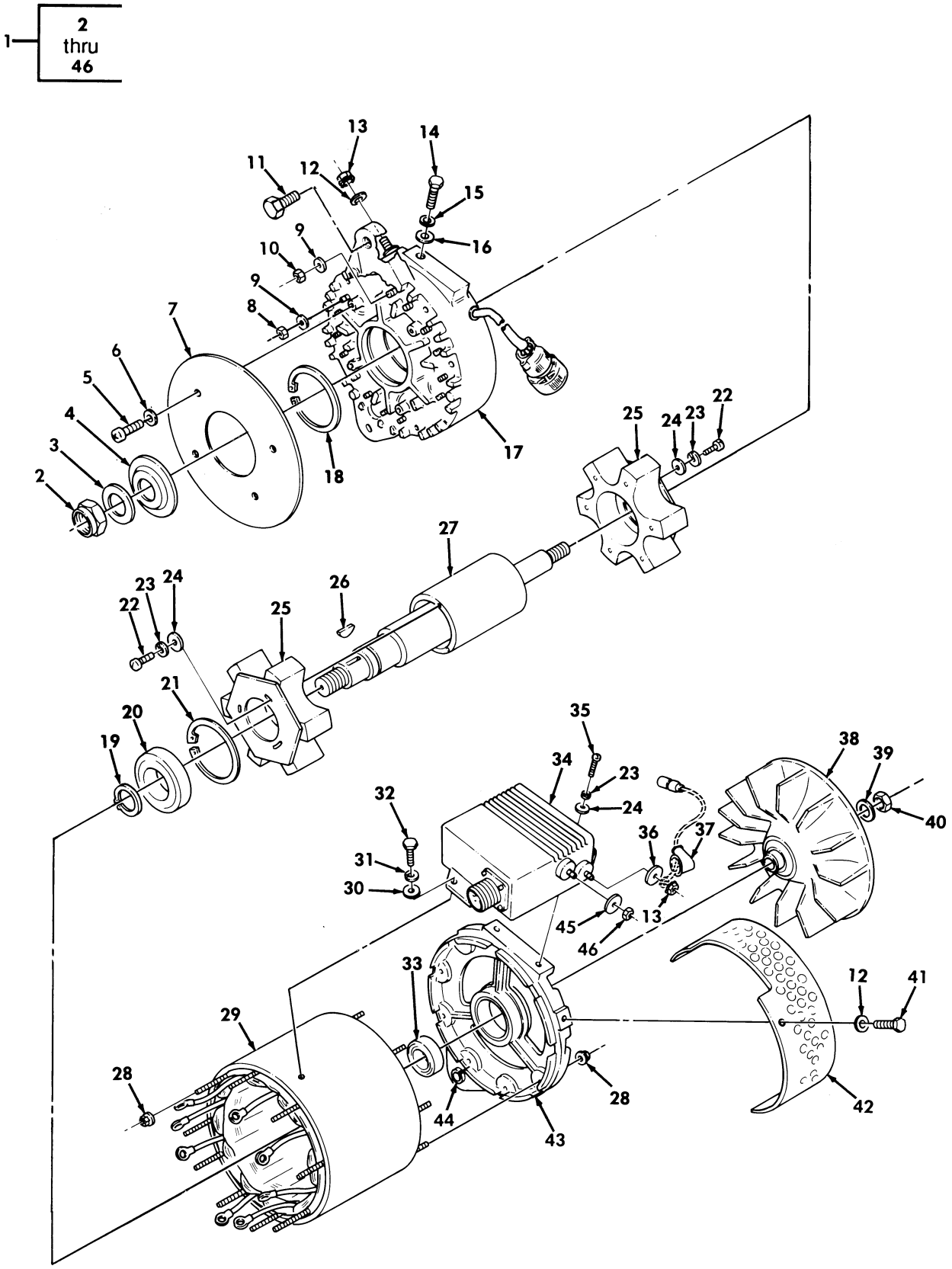

Figure 407. Alternator, 100 AMP (NIEHOFF).

(1) ITEM NO	(2) SMR CODE	(3) NSN	(4) CAGEC	(5) PART NUMBER	(6) DESCRIPTION AND USABLE ON CODES(UOC)	(7) QTY
					GROUP 3307 SPECIAL PURPOSE KITS	
					FIG. 407 ALTERNATOR,100 AMP (NIEHOFF)	
1	PAOFF	2920014070532	19207	12447110	GENERATOR,ENGINE AC..... UOC:A11,A13,A14,A20,A24,A25,A26,A27, B17,B18,B20,B24,B25,C17,H11,H13,H14, H17,H18,H20,H21,H24,H25,H26,H27,H28, MMM	1
2	PAOZZ	5310013488360	76761	N9416	.NUT,SELF-LOCKING,HE..... UOC:A11,A13,A14,A20,A24,A25,A26,A27, B17,B18,B20,B24,B25,C17,H11,H13,H14, H17,H18,H20,H21,H24,H25,H26,H27,H28, MMM	1
3	PAOZZ	5310007720442	19207	7720442	.WASHER,FLAT..... UOC:A11,A13,A14,A20,A24,A25,A26,A27, B17,B18,B20,B24,B25,C17,H11,H13,H14, H17,H18,H20,H21,H24,H25,H26,H27,H28, MMM	1
4	PAFZZ	3110005543246	10988	E114347	.BEARING,BALL,ANNULA..... UOC:A11,A13,A14,A20,A24,A25,A26,A27, B17,B18,B20,B24,B25,C17,H11,H13,H14, H17,H18,H20,H21,H24,H25,H26,H27,H28, MMM	1
5	PAFZZ	5305010324165	76761	N9005	.SCREW,MACHINE..... UOC:A11,A13,A14,A20,A24,A25,A26,A27, B17,B18,B20,B24,B25,C17,H11,H13,H14, H17,H18,H20,H21,H24,H25,H26,H27,H28, MMM	4
6	PAFZZ	5310011364888	76761	N9265	.WASHER,LOCK..... UOC:A11,A13,A14,A20,A24,A25,A26,A27, B17,B18,B20,B24,B25,C17,H11,H13,H14, H17,H18,H20,H21,H24,H25,H26,H27,H28, MMM	4
7	PAOZZ	5340013963950	76761	N9493	.COVER,ACCESS..... UOC:A11,A13,A14,A20,A24,A25,A26,A27, B17,B18,B20,B24,B25,C17,H11,H13,H14, H17,H18,H20,H21,H24,H25,H26,H27,H28, MMM	1
8	PAOZZ	5310012326617	76761	N9343	.NUT,PLAIN,HEXAGON..... UOC:A11,A13,A14,A20,A24,A25,A26,A27, B17,B18,B20,B24,B25,C17,H11,H13,H14, H17,H18,H20,H21,H24,H25,H26,H27,H28, MMM	6
9	PAOZZ	5310012321363	76761	N9062	.WASHER,FLAT..... UOC:A11,A13,A14,A20,A24,A25,A26,A27, B17,B18,B20,B24,B25,C17,H11,H13,H14, H17,H18,H20,H21,H24,H25,H26,H27,H28, MMM	8
10	PAOZZ	5310013626171	76761	N9406	.NUT,SELF-LOCKING,HE..... UOC:A11,A13,A14,A20,A24,A25,A26,A27, B17,B18,B20,B24,B25,C17,H11,H13,H14,	2

(1) ITEM NO	(2) SMR CODE	(3) NSN	(4) CAGEC	(5) PART NUMBER	(6) DESCRIPTION AND USABLE ON CODES(UOC)	(7) QTY
					H17,H18,H20,H21,H24,H25,H26,H27,H28, MMM	
11	PAOZZ	5325003314774	96906	MS122083	.INSERT,SCREW THREAD..... UOC:A11,A13,A14,A20,A24,A25,A26,A27, B17,B18,B20,B24,B25,C17,H11,H13,H14, H17,H18,H20,H21,H24,H25,H26,H27,H28, MMM	1
12	PAFZZ	5310013048733	96906	MS15795-852	.WASHER,FLAT..... UOC:A11,A13,A14,A20,A24,A25,A26,A27, B17,B18,B20,B24,B25,C17,H11,H13,H14, H17,H18,H20,H21,H24,H25,H26,H27,H28, MMM	4
13	PAFZZ	5310013488398	76761	N9410	.NUT,PLAIN,OCTAGON..... UOC:A11,A13,A14,A20,A24,A25,A26,A27, B17,B18,B20,B24,B25,C17,H11,H13,H14, H17,H18,H20,H21,H24,H25,H26,H27,H28, MMM	2
14	PAOZZ	5306002264824	80204	B1821BH031C063N	.BOLT,MACHINE..... UOC:A11,A13,A14,A20,A24,A25,A26,A27, B17,B18,B20,B24,B25,C17,H11,H13,H14, H17,H18,H20,H21,H24,H25,H26,H27,H28, MMM	2
15	PAOZZ	5310004079566	96906	MS35338-45	.WASHER,LOCK..... UOC:A11,A13,A14,A20,A24,A25,A26,A27, B17,B18,B20,B24,B25,C17,H11,H13,H14, H17,H18,H20,H21,H24,H25,H26,H27,H28, MMM	2
16	PAOZZ	5310006255756	96906	MS15795-812	.WASHER,FLAT..... UOC:A11,A13,A14,A20,A24,A25,A26,A27, B17,B18,B20,B24,B25,C17,H11,H13,H14, H17,H18,H20,H21,H24,H25,H26,H27,H28, MMM	2
17	XAFZZ		76761	N7398	.FRONT HOUSING ASSY..... UOC:A11,A13,A14,A20,A24,A25,A26,A27, B17,B18,H11,H13,H14,H17,H18,H20,H21, H24,H25,H26,H27,H28,MMM	1
17	XAFZZ		76761	N7433	.FRONT HOUSING ASSY..... UOC:B20,B24,B25,C17	1
18	PAFZZ	5325013964320	76761	N9494	.RING,RETAINING..... UOC:A11,A13,A14,A20,A24,A25,A26,A27, B17,B18,B20,B24,B25,C17,H11,H13,H14, H17,H18,H20,H21,H24,H25,H26,H27,H28, MMM	1
19	PAFZZ	5325011367662	76761	N9260	.RING,RETAINING..... UOC:A11,A13,A14,A20,A24,A25,A26,A27, B17,B18,B20,B24,B25,C17,H11,H13,H14, H17,H18,H20,H21,H24,H25,H26,H27,H28, MMM	1
20	PAFZZ	3130013968388	76761	N9486	.BEARING UNIT,BALL..... UOC:A11,A13,A14,A20,A24,A25,A26,A27, B17,B18,B20,B24,B25,C17,H11,H13,H14, H17,H18,H20,H21,H24,H25,H26,H27,H28, MMM	1

(1) ITEM NO	(2) SMR CODE	(3) NSN	(4) CAGEC	(5) PART NUMBER	(6) DESCRIPTION AND USABLE ON CODES(UOC)	(7) QTY
21	PAFZZ	5325011364880	76761	N9256	.RING,RETAINING..... UOC:A11,A13,A14,A20,A24,A25,A26,A27, B17,B18,B20,B24,B25,C17,H11,H13,H14, H17,H18,H20,H21,H24,H25,H26,H27,H28, MMM	1
22	PAFZZ	5305000593659	64648	2003-0015-3	.SCREW,MACHINE..... UOC:A11,A13,A14,A20,A24,A25,A26,A27, B17,B18,B20,B24,B25,C17,H11,H13,H14, H17,H18,H20,H21,H24,H25,H26,H27,H28, MMM	6
23	PAFZZ	5310000453296	96906	MS35338-43	.WASHER,LOCK..... UOC:A11,A13,A14,A20,A24,A25,A26,A27, B17,B18,B20,B24,B25,C17,H11,H13,H14, H17,H18,H20,H21,H24,H25,H26,H27,H28, MMM	8
24	PAFZA	5310006151556	28527	2616950G001	.WASHER,FLAT..... UOC:A11,A13,A14,A20,A24,A25,A26,A27, B17,B18,B20,B24,B25,C17,H11,H13,H14, H17,H18,H20,H21,H24,H25,H26,H27,H28, MMM	8
25	XAFZZ		76761	N7402	.ROTOR ASSEMBLY..... UOC:A11,A13,A14,A20,A24,A25,A26,A27, B17,B18,B20,B24,B25,C17,H11,H13,H14, H17,H18,H20,H21,H24,H25,H26,H27,H28, MMM	2
26	PAOZZ	5315000124553	80205	MS35756-17	.KEY,WOODRUFF..... UOC:A11,A13,A14,A20,A24,A25,A26,A27, B17,B18,B20,B24,B25,C17,H11,H13,H14, H17,H18,H20,H21,H24,H25,H26,H27,H28, MMM	1
27	XAFZZ		76761	N7400	.CORE,SHAFT ASSEMBLY..... UOC:A11,A13,A14,A20,A24,A25,A26,A27, B17,B18,B20,B24,B25,C17,H11,H13,H14, H17,H18,H20,H21,H24,H25,H26,H27,H28, MMM	1
28	PAFZZ	5310011651312	76761	N9099	.NUT,SELF-LOCKING,EX..... UOC:A11,A13,A14,A20,A24,A25,A26,A27, B17,B18,B20,B24,B25,C17,H11,H13,H14, H17,H18,H20,H21,H24,H25,H26,H27,H28, MMM	18
29	XAFZZ		76761	N7399	.SHELL,STATOR,FIELD..... UOC:A11,A13,A14,A20,A24,A25,A26,A27, B17,B18,B20,B24,B25,C17,H11,H13,H14, H17,H18,H20,H21,H24,H25,H26,H27,H28, MMM	1
30	PAOZZ	5310013048733	96906	MS15795-852	.WASHER,FLAT 1/4..... UOC:A11,A13,A14,A20,A24,A25,A26,A27, B17,B18,B20,B24,B25,C17,H11,H13,H14, H17,H18,H20,H21,H24,H25,H26,H27,H28, MMM	2
31	PAOZZ	5310005825965	96906	MS35338-44	.WASHER,LOCK 1/4..... UOC:A11,A13,A14,A20,A24,A25,A26,A27, B17,B18,B20,B24,B25,C17,H11,H13,H14,	2

(1) ITEM NO	(2) SMR CODE	(3) NSN	(4) CAGEC	(5) PART NUMBER	(6) DESCRIPTION AND USABLE ON CODES(UOC)	(7) QTY
					H17,H18,H20,H21,H24,H25,H26,H27,H28, MMM	
32	PAOZZ	5305013846279	80204	B1821BH025F063N	.SCREW,CAP,HEXAGON H 1/4-20 X 5/8.. UOC:A11,A13,A14,A20,A24,A25,A26,A27, B17,B18,B20,B24,B25,C17,H11,H13,H14, H17,H18,H20,H21,H24,H25,H26,H27,H28, MMM	2
33	PAFZZ	3110013484867	76761	N9385	.BEARING,BALL,ANNULA..... UOC:A11,A13,A14,A20,A24,A25,A26,A27, B17,B18,B20,B24,B25,C17,H11,H13,H14, H17,H18,H20,H21,H24,H25,H26,H27,H28, MMM	1
34	PAOZZ	2920014159497	76761	N3117	.REGULATOR,ENGINE GE..... UOC:A11,A13,A14,A20,A24,A25,A26,A27, B17,B18,H11,H13,H14,H17,H18,H20,H21, H24,H25,H26,H27,H28,MMM	1
34	PAOZZ	2920014299591	76761	N3119	.REGULATOR,ENGINE GE..... UOC:B20,B24,B25,C17	1
35	PAOZZ	5305006164831	96906	MS35266-65	.SCREW,MACHINE 3/16-32 X .75..... UOC:A11,A13,A14,A20,A24,A25,A26,A27, B17,B18,B20,B24,B25,C17,H11,H13,H14, H17,H18,H20,H21,H24,H25,H26,H27,H28, MMM	2
36	PAOZZ	5310013508549	76761	N9465	.WASHER,FLAT..... UOC:A11,A13,A14,A20,A24,A25,A26,A27, B17,B18,B20,B24,B25,C17,H11,H13,H14, H17,H18,H20,H21,H24,H25,H26,H27,H28, MMM	1
37	PAOZZ	5975013501987	76761	N9464	.BOOT,DUST AND MOIST..... UOC:A11,A13,A14,A20,A24,A25,A26,A27, B17,B18,B20,B24,B25,C17,H11,H13,H14, H17,H18,H20,H21,H24,H25,H26,H27,H28, MMM	3
38	PFFZZ	4140013972228	76761	N9491	.IMPELLER,FAN,CENTRI..... UOC:A11,A13,A14,A20,A24,A25,A26,A27, B17,B18,B20,B24,B25,C17,H11,H13,H14, H17,H18,H20,H21,H24,H25,H26,H27,H28, MMM	1
39	PAFZZ	5310010506565	76761	N9063	.WASHER,FLAT..... UOC:A11,A13,A14,A20,A24,A25,A26,A27, B17,B18,B20,B24,B25,C17,H11,H13,H14, H17,H18,H20,H21,H24,H25,H26,H27,H28, MMM	1
40	PAFZA	5310013905105	76761	N9092	.NUT,SELF-LOCKING,HE..... UOC:A11,A13,A14,A20,A24,A25,A26,A27, B17,B18,B20,B24,B25,C17,H11,H13,H14, H17,H18,H20,H21,H24,H25,H26,H27,H28, MMM	1
41	PAOZZ	5305000680508	80204	B1821BH025C075N	.SCREW,CAP,HEXAGON H 1/4-20 X 3/4.. UOC:A11,A13,A14,A20,A24,A25,A26,A27, B17,B18,B20,B24,B25,C17,H11,H13,H14, H17,H18,H20,H21,H24,H25,H26,H27,H28, MMM	3

(1) ITEM NO	(2) SMR CODE	(3) NSN	(4) CAGEC	(5) PART NUMBER	(6) DESCRIPTION AND USABLE ON CODES(UOC)	(7) QTY
42	PFOZZ	4140013948583	19207	12342930	.GUARD,FAN IMPELLER..... UOC:A11,A13,A14,A20,A24,A25,A26,A27, B17,B18,B20,B24,B25,C17,H11,H13,H14, H17,H18,H20,H21,H24,H25,H26,H27,H28, MMM	1
43	PAFZZ	2920013990794	76761	N7401	.END BELL,ELECTRICAL..... UOC:A11,A13,A14,A20,A24,A25,A26,A27, B17,B18,B20,B24,B25,C17,H11,H13,H14, H17,H18,H20,H21,H24,H25,H26,H27,H28, MMM	1
44	PAOZZ	3120014136106	19207	12342711	.BUSHING,SLEEVE..... UOC:A11,A13,A14,A20,A24,A25,A26,A27, B17,B18,H11,H13,H14,H17,H18,H20,H21, H24,H25,H26,H27,H28,MMM	1
44	PAOZZ	3120014241028	76761	N9545	.BUSHING,SLEEVE..... UOC:B20,B24,B25,C17	1
45	PAOZZ	5310010428391	13499	500-1114-003	.WASHER,FLAT..... UOC:A11,A13,A14,A20,A24,A25,A26,A27, B17,B18,B20,B24,B25,C17,H11,H13,H14, H17,H18,H20,H21,H24,H25,H26,H27,H28, MMM	1
46	PAOZZ	5310013504257	76761	N9467	.NUT,PLAIN,CAP..... UOC:A11,A13,A14,A20,A24,A25,A26,A27, B17,B18,B20,B24,B25,C17,H11,H13,H14, H17,H18,H20,H21,H24,H25,H26,H27,H28, MMM	1

END OF FIGURE

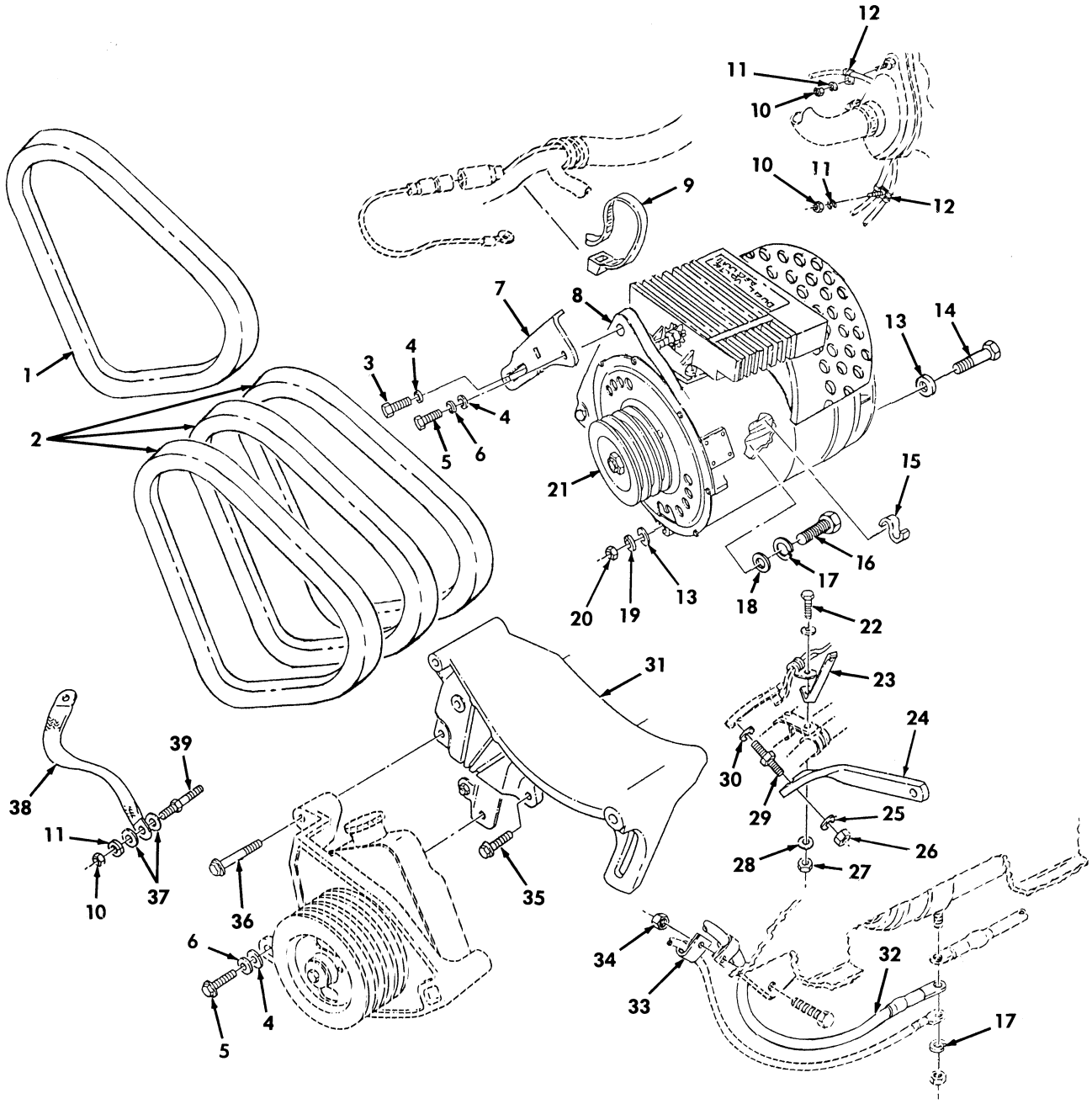

Figure 408. Alternator, 200 AMP Kit.

(1) ITEM NO	(2) SMR CODE	(3) NSN	(4) CAGEC	(5) PART NUMBER	(6) DESCRIPTION AND USABLE ON CODES(UOC)	(7) QTY
					GROUP 3307 SPECIAL PURPOSE KITS	
					FIG. 408 ALTERNATOR,200 AMP KIT	
1	PAOZZ	3030012563616	19207	12339359-14	V-BELT PART OF KIT P/N 57K0247..... UOC:AVY,A11,A13,A14,A15,A20,A24,A25, A26,A27,B16,B17,B18,HVY,H11,H13,H14, H15,H16,H17,H18,H20,H21,H24,H25,H26, H27,H28,MMM	1
2	PAOZZ	3030013214482	19207	12339359-18	BELTS,V,MATCHED SET PART OF KIT P/N 57K0247..... UOC:AVY,A11,A13,A14,A15,A20,A24,A25, A26,A27,B16,B17,B18,HVY,H11,H13,H14, H15,H16,H17,H18,H20,H21,H24,H25,H26, H27,H28,MMM	1
3	PAOZZ	5306011140963	80204	B1821BH038C100L	BOLT,MACHINE PART OF KIT P/N 57K0247 UOC:AVY,A11,A13,A14,A15,A20,A24,A25, A26,A27,B16,B17,B18,HVY,H11,H13,H14, H15,H16,H17,H18,H20,H21,H24,H25,H26, H27,H28,MMM	1
4	PAOZZ	5310000806004	96906	MS27183-14	WASHER,FLAT PART OF KIT P/N 57K0247. UOC:AVY,A11,A13,A14,A15,A20,A24,A25, A26,A27,B16,B17,B18,HVY,H11,H13,H14, H15,H16,H17,H18,H20,H21,H24,H25,H26, H27,H28,MMM	3
5	PAOZZ	5305000680510	80204	B1821BH038C100N	SCREW,CAP,HEXAGON H PART OF KIT P/N 57K0247..... UOC:AVY,A11,A13,A14,A15,A20,A24,A25, A26,A27,B16,B17,B18,HVY,H11,H13,H14, H15,H16,H17,H18,H20,H21,H24,H25,H26, H27,H28,MMM	2
6	PAOZZ	5310006379541	96906	MS35338-46	WASHER,LOCK PART OF KIT P/N 57K0247. UOC:AVY,A11,A13,A14,A15,A20,A24,A25, A26,A27,B16,B17,B18,HVY,H11,H13,H14, H15,H16,H17,H18,H20,H21,H24,H25,H26, H27,H28,MMM	2
7	PAOZZ	5340011975548	19207	12340057	BRACKET,ENGINE ACCE PART OF KIT P/N. 57K0247..... UOC:AVY,A11,A13,A14,A15,A20,A24,A25, A26,A27,B16,B17,B18,HVY,H11,H13,H14, H15,H16,H17,H18,H20,H21,H24,H25,H26, H27,H28,MMM	1
8	PAOZZ	2920012646542	19207	12338796-1	GENERATOR,ENGINE AC PART OF KIT P/N 57K0247..... UOC:AVY,A11,A13,A14,A15,A20,A24,A25, A26,A27,B16,B17,B18,HVY,H11,H13,H14, H15,H16,H17,H18,H20,H21,H24,H25,H26, H27,H28,MMM	1
9	PAOZZ	5975009856630	96906	MS3367-3-0	STRAP,TIEDOWN,ELECT PART OF KIT P/N 57K0247..... UOC:AVY,A11,A13,A14,A15,A20,A24,A25, A26,A27,B16,B17,B18,HVY,H11,H13,H14, H15,H16,H17,H18,H20,H21,H24,H25,H26,	1

(1) ITEM NO	(2) SMR CODE	(3) NSN	(4) CAGEC	(5) PART NUMBER	(6) DESCRIPTION AND USABLE ON CODES(UOC)	(7) QTY
					H27,H28,MMM	
10	PAOZZ	5310012510725	05047	5593046	NUT,PLAIN,HEXAGON PART OF KIT P/N 57K0247..... UOC:AVY,A11,A13,A14,A15,A20,A24,A25, A26,A27,B16,B17,B18,HVY,H11,H13,H14, H15,H16,H17,H18,H20,H21,H24,H25,H26, H27,H28,MMM	3
11	PAOZZ	5310012067306	7X677	11500207	WASHER,LOCK PART OF KIT P/N 57K0247 UOC:AVY,A11,A13,A14,A15,A20,A24,A25, A26,A27,B16,B17,B18,HVY,H11,H13,H14, H15,H16,H17,H18,H20,H21,H24,H25,H26, H27,H28,MMM	3
12	PAOZZ	5340000538994	96906	MS21333-126	CLAMP,LOOP PART OF IT P/N 57K0247... UOC:AVY,A11,A13,A14,A15,A20,A24,A25, A26,A27,B16,B17,B18,HVY,H11,H13,H14, H15,H16,H17,H18,H20,H21,H24,H25,H26, H27,H28,MMM	2
13	PAOZZ	5310002090965	96906	MS35338-47	WASHER,LOCK PART OF KIT P/N 57K0247. UOC:AVY,A11,A13,A14,A15,A20,A24,A25, A26,A27,B16,B17,B18,HVY,H11,H13,H14, H15,H16,H17,H18,H20,H21,H24,H25,H26, H27,H28,MMM	2
14	PAOZZ	5305000712059	80204	B1821BH044C250N	SCREW,CAP,HEXAGON H PART OF KIT P/N 57K0247..... UOC:AVY,A11,A13,A14,A15,A20,A24,A25, A26,A27,B16,B17,B18,HVY,H11,H13,H14, H15,H16,H17,H18,H20,H21,H24,H25,H26, H27,H28,MMM	1
15	PAOZZ	5340011870892	19207	12339890	CLIP,SPRING TENSION PART OF KIT P/N 57K0247..... UOC:AVY,A11,A13,A14,A15,A20,A24,A25, A26,A27,B16,B17,B18,HVY,H11,H13,H14, H15,H16,H17,H18,H20,H21,H24,H25,H26, H27,H28,MMM	1
16	PAOZZ	5305000712069	80204	B1821BH050C150N	SCREW,CAP,HEXAGON H PART OF KIT P/N 57K0247..... UOC:AVY,A11,A13,A14,A15,A20,A24,A25, A26,A27,B16,B17,B18,HVY,H11,H13,H14, H15,H16,H17,H18,H20,H21,H24,H25,H26, H27,H28,MMM	1
17	PAOZZ	5310000034094	96906	MS35338-48	WASHER,LOCK PART OF KIT P/N 57K0247. UOC:AVY,A11,A13,A14,A15,A20,A24,A25, A26,A27,B16,B17,B18,HVY,H11,H13,H14, H15,H16,H17,H18,H20,H21,H24,H25,H26, H27,H28,MMM	2
18	PAOZZ	5310011211703	24617	2436165	WASHER,FLAT PART OF KIT P/N 57K0247. UOC:AVY,A11,A13,A14,A15,A20,A24,A25, A26,A27,B16,B17,B18,HVY,H11,H13,H14, H15,H16,H17,H18,H20,H21,H24,H25,H26, H27,H28,MMM	1
19	PAOZZ	5310008094085	96906	MS27183-16	WASHER,FLAT PART OF KIT P/N 57K0247. UOC:AVY,A11,A13,A14,A15,A20,A24,A25, A26,A27,B16,B17,B18,HVY,H11,H13,H14,	1

(1) ITEM NO	(2) SMR CODE	(3) NSN	(4) CAGEC	(5) PART NUMBER	(6) DESCRIPTION AND USABLE ON CODES(UOC)	(7) QTY
					H15,H16,H17,H18,H20,H21,H24,H25,H26, H27,H28,MMM	
20	PAOZZ	5310014573171	24617	9417028	NUT,PLAIN,HEXAGON PART OF KIT P/N 57K0247..... UOC:AVY,A11,A13,A14,A15,A20,A24,A25, A26,A27,B16,B17,B18,HVY,H11,H13,H14, H15,H16,H17,H18,H20,H21,H24,H25,H26, H27,H28,MMM	1
21	PAOZZ	3020012329629	19207	12339392	PULLEY,GROOVE PART OF KIT P/N 57K0247..... UOC:AVY,A11,A13,A14,A15,A20,A24,A25, A26,A27,B16,B17,B18,HVY,H11,H13,H14, H15,H16,H17,H18,H20,H21,H24,H25,H26, H27,H28,MMM	1
22	PAOZZ	5305002253843	80204	B1821BH025C100N	SCREW,CAP,HEXAGON H 1/4-20 X 1.00, PART OF KIT P/N 57K0247..... UOC:AVY,A11,A13,A14,A15,A20,A24,A25, A26,A27,B16,B17,B18,HVY,H11,H13,H14, H15,H16,H17,H18,H20,H21,H24,H25,H26, H27,H28,MMM	1
23	PAOZZ	5340012925402	19207	12342076	BRACKET PART OF KIT P/N 57K0247..... UOC:AVY,A11,A13,A14,A15,A20,A24,A25, A26,A27,B16,B17,B18,HVY,H11,H13,H14, H15,H16,H17,H18,H20,H21,H24,H25,H26, H27,H28,MMM	1
24	PAOZZ	5340012928404	19207	12342074	BRACKET PART OF KIT P/N 57K0247..... UOC:AVY,A11,A13,A14,A15,A20,A24,A25, A26,A27,B16,B17,B18,HVY,H11,H13,H14, H15,H16,H17,H18,H20,H21,H24,H25,H26, H27,H28,MMM	1
25	PAOZZ	5310012067306	7X677	11500207	WASHER,LOCK PART OF KIT P/N 57K0247. UOC:AVY,A11,A13,A14,A15,A20,A24,A25, A26,A27,B16,B17,B18,HVY,H11,H13,H14, H15,H16,H17,H18,H20,H21,H24,H25,H26, H27,H28,MMM	1
26	PAOZZ	5310012410725	34623	5593046	NUT,PLAIN,HEXAGON 10 MM X 1.5,PART OF KIT P/N 57K0247..... UOC:AVY,A11,A13,A14,A15,A20,A24,A25, A26,A27,B16,B17,B18,HVY,H11,H13,H14, H15,H16,H17,H18,H20,H21,H24,H25,H26, H27,H28,MMM	1
27	PAOZZ	5310000614650	96906	MS51943-31	NUT,SELF-LOCKING,HE PART OF KIT P/N. 57K0247..... UOC:AVY,A11,A13,A14,A15,A20,A24,A25, A26,A27,B16,B17,B18,HVY,H11,H13,H14, H15,H16,H17,H18,H20,H21,H24,H25,H26, H27,H28,MMM	1
28	PAOZZ	5310008094058	96906	MS27183-10	WASHER,FLAT PART OF KIT P/N 57K0247. UOC:AVY,A11,A13,A14,A15,A20,A24,A25, A26,A27,B16,B17,B18,HVY,H11,H13,H14, H15,H16,H17,H18,H20,H21,H24,H25,H26, H27,H28,MMM	1
29	PAOZZ	5307013153597	19207	12339406-3	STUD,SHOULDERED PART OF KIT P/N	1

(1) ITEM NO	(2) SMR CODE	(3) NSN	(4) CAGEC	(5) PART NUMBER	(6) DESCRIPTION AND USABLE ON CODES(UOC)	(7) QTY
					57K0247..... UOC:AVY,A11,A13,A14,A15,A20,A24,A25, A26,A27,B16,B17,B18,HVY,H11,H13,H14, H15,H16,H17,H18,H20,H21,H24,H25,H26, H27,H28,MMM	
30	PAOZZ	5310005956057	96906	MS15795-815	WASHER,FLAT PART OF KIT P/N 57K0247. UOC:AVY,A11,A13,A14,A15,A20,A24,A25, A26,A27,B16,B17,B18,HVY,H11,H13,H14, H15,H16,H17,H18,H20,H21,H24,H25,H26, H27,H28,MMM	1
31	PAOZZ	2590014444365	19207	12338786-1	BRACKET PART OF KIT P/N 57K0247..... UOC:AVY,A11,A13,A14,A15,A20,A24,A25, A26,A27,B16,B17,B18,HVY,H11,H13,H14, H15,H16,H17,H18,H20,H21,H24,H25,H26, H27,H28,MMM	1
32	PAOZZ	6150014495445	19207	12339317	CABLE ASSEMBLY PART OF KIT P/N 57K0247..... UOC:AVY,A11,A13,A14,A15,A20,A24,A25, A26,A27,B16,B17,B18,HVY,H11,H13,H14, H15,H16,H17,H18,H20,H21,H24,H25,H26, H27,H28,MMM	1
33	PAOZZ	5340008091494	96906	MS21333-105	CLAMP,LOOP PART OF KIT P/N 57K0247.. UOC:AVY,A11,A13,A14,A15,A20,A24,A25, A26,A27,B16,B17,B18,HVY,H11,H13,H14, H15,H16,H17,H18,H20,H21,H24,H25,H26, H27,H28,MMM	1
34	PAOZZ	5310011520598	24617	271172	NUT,SELF-LOCKING PART OF KIT P/N 57K0247..... UOC:AVY,A11,A13,A14,A15,A20,A24,A25, A26,A27,B16,B17,B18,HVY,H11,H13,H14, H15,H16,H17,H18,H20,H21,H24,H25,H26, H27,H28,MMM	1
35	PAOZZ	5306012638889	19207	12340845-2	BOLT,MACHINE PART OF KIT P/N 57K0247 UOC:AVY,A11,A13,A14,A15,A20,A24,A25, A26,A27,B16,B17,B18,HVY,H11,H13,H14, H15,H16,H17,H18,H20,H21,H24,H25,H26, H27,H28,MMM	1
36	PAOZZ	5306012643531	19207	12340845-4	BOLT,MACHINE PART OF KIT P/N 57K0247 UOC:AVY,A11,A13,A14,A15,A20,A24,A25, A26,A27,B16,B17,B18,HVY,H11,H13,H14, H15,H16,H17,H18,H20,H21,H24,H25,H26, H27,H28,MMM	1
37	PAOZZ	5310012101587	7X677	11500256	WASHER,FLAT PART OF KIT P/N 57K0247. UOC:AVY,A11,A13,A14,A15,A20,A24,A25, A26,A27,B16,B17,B18,HVY,H11,H13,H14, H15,H16,H17,H18,H20,H21,H24,H25,H26, H27,H28,MMM	2
38	PAOZZ	5999013725601	19207	12341151	STRIP,ELECTRICAL GR PART OF KIT P/N 57K0247..... UOC:AVY,A11,A13,A14,A15,A20,A24,A25, A26,A27,B16,B17,B18,HVY,H11,H13,H14, H15,H16,H17,H18,H20,H21,H24,H25,H26, H27,H28,MMM	1

(1) ITEM NO	(2) SMR CODE	(3) NSN	(4) CAGEC	(5) PART NUMBER	(6) DESCRIPTION AND USABLE ON CODES(UOC)	(7) QTY
39	PAOZZ	5307014084029	19207	12342545	STUD,SHOULDERED PART OF KIT P/N 57K0247..... UOC:AVY,A11,A13,A14,A15,A20,A24,A25, A26,A27,B16,B17,B18,HVY,H11,H13,H14, H15,H16,H17,H18,H20,H21,H24,H25,H26, H27,H28,MMM	1
KIT	PDOZZ	2920013859823	19207	57K0247	PARTS KIT,ENGINE GE..... UOC:AVY,A11,A13,A14,A15,A20,A24,A25, A26,A27,B16,B17,B18,HVY,H11,H13,H14, H15,H16,H17,H18,H20,H21,H24,H25,H26, H27,H28,MMM	1
					BELTS,V,MATCHED (1) 408-2	
					BOLT,MACHINE (1) 408-3	
					BOLT,MACHINE (1) 408-35	
					BOLT,MACHINE (1) 408-36	
					BRACKET,DOUBLE,ANGL(1) 408-23	
					BRACKET,ENGINE,ACCE(1) 408-7	
					BRACKET,MOUNTING (1) 408-24	
					BRACKET,MOUNTING (1) 408-31	
					CABLE ASSEMBLY (1) 408-32	
					CLAMP,LOOP (2) 408-12	
					CLAMP,LOOP (1) 408-33	
					CLIP,SPRING,TENSION(1) 408-15	
					GENERATOR,ENGINE (1) 408-8	
					NUT,PLAIN,HEXAGON (3) 408-10	
					NUT,PLAIN,HEXAGON (1) 408-20	
					NUT,PLAIN,HEXAGON (1) 408-26	
					NUT,SELF-LOCKING (1) 408-27	
					NUT,SELF-LOCKING (1) 408-34	
					PULLEY,GROOVE (1) 408-21	
					SCREW,CAP,HEXAGON H(2) 408-5	
					SCREW,CAP,HEXAGON H(1) 408-14	
					SCREW,CAP,HEXAGON H(1) 408-16	
					SCREW,CAP,HEXAGON H(1) 408-22	
					STRAP,TIEDOWN,ELECT(1) 408-9	
					STRIP,ELECTRICAL GR(1) 408-38	
					STUD,SHOULDERED (1) 408-29	
					STUD,SHOULDERED (1) 408-39	
					V-BELT (1) 408-1	
					WASHER,FLAT (3) 408-4	
					WASHER,FLAT (1) 408-18	
					WASHER,FLAT (1) 408-19	
					WASHER,FLAT (1) 408-28	
					WASHER,FLAT (1) 408-30	
					WASHER,FLAT (2) 408-37	
					WASHER,LOCK (1) 408-6	
					WASHER,LOCK (3) 408-11	
					WASHER,LOCK (2) 408-13	
					WASHER,LOCK (2) 408-17	
					WASHER,LOCK (1) 408-25	

END OF FIGURE

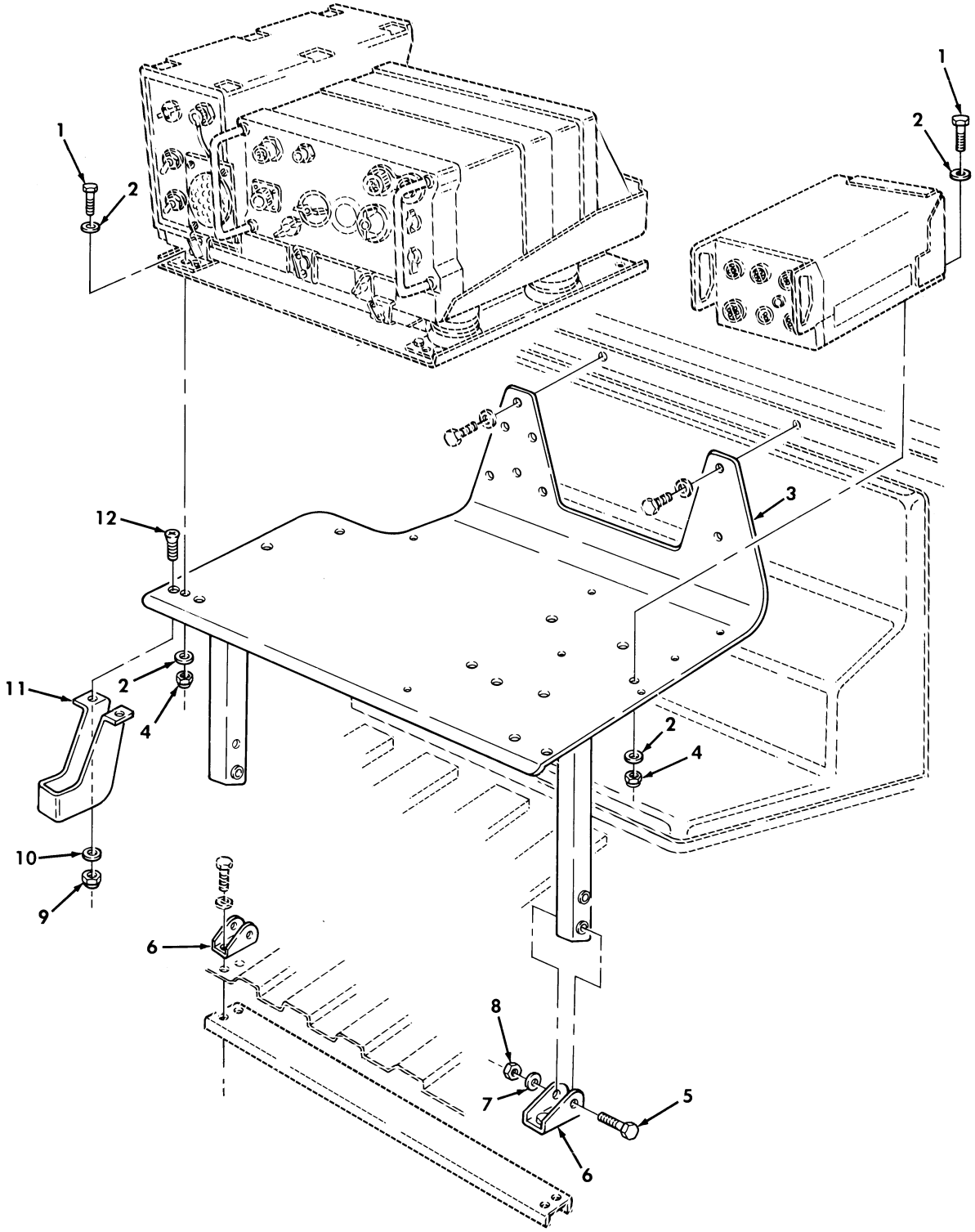

Figure 409. Communications Kit, Radio Rack Assembly, and Mounting Hardware, AN/GRC-160 and TSEC/KY-57.

(1) ITEM NO	(2) SMR CODE	(3) NSN	(4) CAGEC	(5) PART NUMBER	(6) DESCRIPTION AND USABLE ON CODES(UOC)	(7) QTY
					GROUP 3307 SPECIAL PURPOSE KITS	
					FIG. 409 COMMUNICATIONS KIT,RADIO RACK ASSEMBLY,AND MOUNTING HARDWARE, AN/GRC-160 AND TSEC/KY-57	
1	PAOZZ	5306002258499	96906	MS90725-34	BOLT,MACHINE 5/16-18 X 1.00,PART OF KIT P/N 5590244..... UOC:AVY,A13,A14,HVY,H13,H14	9
2	PAOZZ	5310012520512	34623	5592832	WASHER,FLAT 5/16 PART OF KIT P/N 5590244..... UOC:AVY,A13,A14,HVY,H13,H14	18
3	PFOZZ	5975011975505	19207	12340167	MOUNTING BASE,ELECT PART OF KIT P/N 5590244..... UOC:AVY,A13,A14,HVY,H13,H14	1
4	PAOZZ	5310008140673	96906	MS51943-33	NUT,SELF-LOCKING,HE 5/16-18 PART OF KIT P/N 5590244..... UOC:AVY,A13,A14,HVY,H13,H14	9
5	PAOZZ	5306010684592	96906	MS35764-1303	BOLT,SELF-LOCKING 3/8-16 X 2.25 PART OF KIT P/N 5590244..... UOC:AVY,A13,A14,HVY,H13,H14	2
6	PFOZZ	2590012028546	19207	12340134	BRACKET,VEHICULAR C PART OF KIT P/N 5590244..... UOC:AVY,A13,A14,HVY,H13,H14	2
7	PAOZZ	5310014124013	24617	2436163	WASHER,FLAT 3/8 PART OF KIT P/N 5590244..... UOC:AVY,A13,A14,HVY,H13,H14	2
8	PAOZZ	5310009359021	96906	MS51943-35	NUT,SELF-LOCKING,HE 3/8-16,PART OF KIT P/N 5590244..... UOC:AVY,A13,A14,HVY,H13,H14	2
9	PAOZZ	5310000614650	96906	MS51943-31	NUT,SELF-LOCKING,HE 1/4-20 PART OF KIT P/N 5590244..... UOC:AVY,A13,A14,HVY,H13,H14	2
10	PAOZZ	5310011023270	24617	2436161	WASHER,FLAT 1/4 PART OF KIT P/N 5590244..... UOC:AVY,A13,A14,HVY,H13,H14	2
11	PFOZZ	2540012028545	19207	12340131	BRACKET,HEAD PHONE PART OF KIT P/N 5590244..... UOC:AVY,A13,A14,HVY,H13,H14	1
12	PAOZZ	5305007195021	96906	MS51959-81	SCREW,MACHINE 1/4-20 X .75 PART OF KIT P/N 5590244..... UOC:AVY,A13,A14,HVY,H13,H14	2

END OF FIGURE

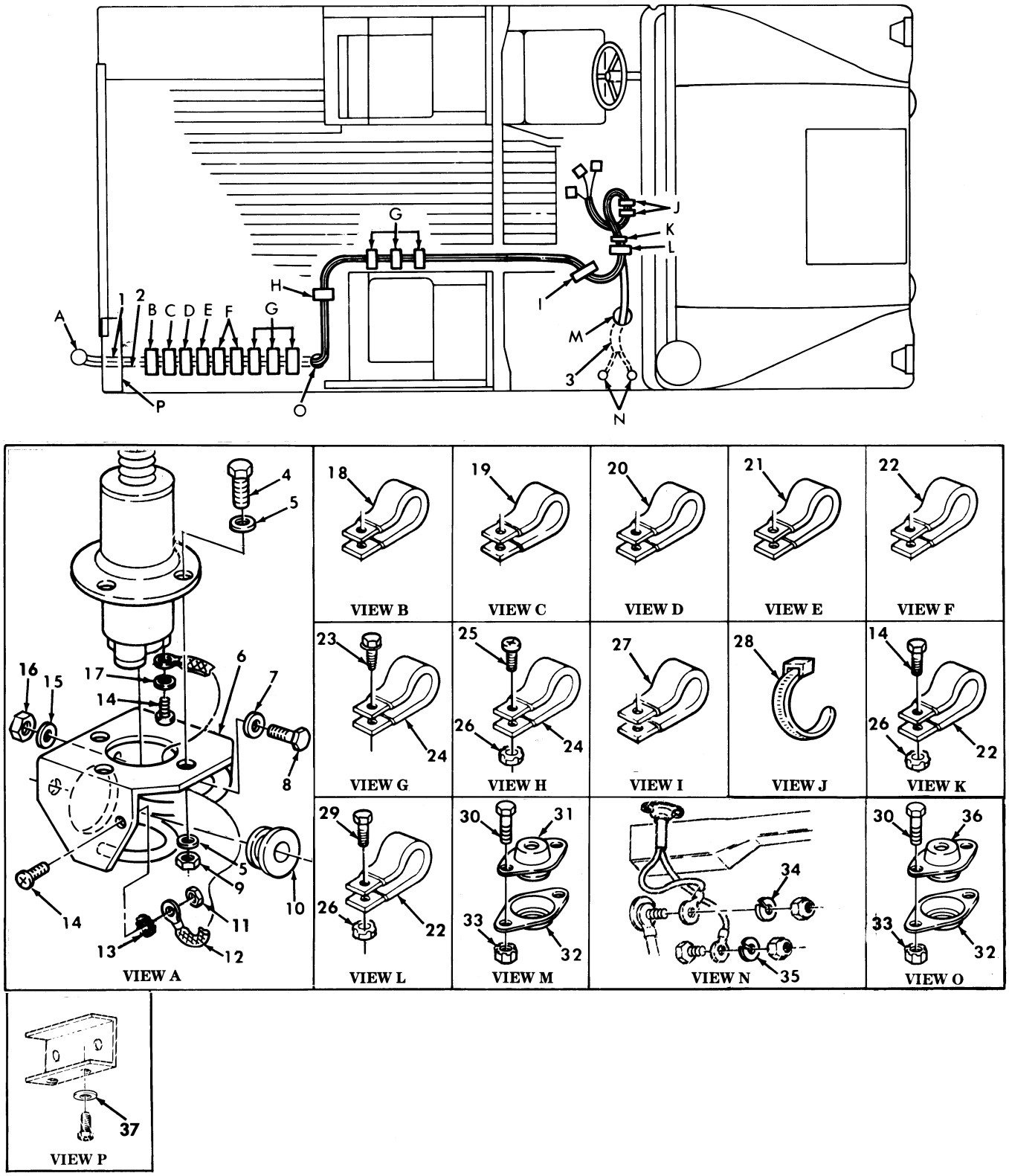

Figure 410. Communications Kit, Radio Cables, AN/GRC-160, AN/VRC-46, and TSEC/KY-57.

(1) ITEM NO	(2) SMR CODE	(3) NSN	(4) CAGEC	(5) PART NUMBER	(6) DESCRIPTION AND USABLE ON CODES(UOC)	(7) QTY
					GROUP 3307 SPECIAL PURPOSE KITS	
					FIG. 410 COMMUNICATIONS KIT,RADIO CABLES,AN/GRC-160,AN/VRC-46,AND TSEC/KY-57	
1	PAOZZ	5995012017495	19207	12338086-3	CABLE ASSEMBLY,RADI PART OF KIT P/N 5590244..... UOC:A13,A14,H13,H14	1
2	PAOZZ	5995012014129	19207	12338089-3	CABLE ASSEMBLY,SPEC PART OF KIT P/N 5590244..... UOC:A13,A14,H13,H14	1
3	PAOZZ	5995012014128	19207	12338088	CABLE ASSEMBLY,SPEC PART OF KIT P/N 5590244..... UOC:A13,A14,H13,H14	1
4	PAOZZ	5305002693216	96906	MS90725-66	SCREW,CAP,HEXAGON H 3/8-16 X 2.00, PART OF KIT P/N 5590244..... UOC:A13,A14,H13,H14	4
5	PAOZZ	5310014124013	24617	2436163	WASHER,FLAT 3/8,PART OF KIT P/N 5590244..... UOC:A13,A14,H13,H14	8
6	PFOZZ	5985012159404	80063	A3046166	SUPPORT,ANTENNA PART OF KIT P/N 5590244..... UOC:A13,A14,H13,H14	1
7	PAOZZ	5310012520512	34623	5592832	WASHER,FLAT 5/16,PART OF KIT P/N 5590244..... UOC:A13,A14,H13,H14	3
8	PAOZZ	5306002258499	96906	MS90725-34	BOLT,MACHINE 5/16-18 X 3/4,PART OF KIT P/N 5590244..... UOC:A13,A14,H13,H14	3
9	PAOZZ	5310009359021	96906	MS51943-35	NUT,SELF-LOCKING,HE 3/8-16,PART OF KIT P/N 5590244..... UOC:A13,A14,H13,H14	4
10	PAOZZ	5325012085424	19207	12338098	GROMMET,NONMETALLIC PART OF KIT P/N 5590244..... UOC:A13,A14,H13,H14	1
11	PAOZZ	5310012510726	34623	5593053	NUT,SELF-LOCKING,HE #10-32,PART OF KIT P/N 5590244..... UOC:A13,A14,H13,H14	1
12	PAOZZ	5999012720018	34623	5598121	STRIP,ELECTRICAL GR PART OF KIT P/N 5590244..... UOC:A13,A14,H13,H14	1
13	PAOZZ	5310000453296	96906	MS35338-43	WASHER,LOCK #10,PART OF KIT P/N 5590244..... UOC:A13,A14,H13,H14	1
14	PAOZZ	5305000593659	96906	MS51958-63	SCREW,MACHINE #10-32 X 1/2,PART OF KIT P/N 5590244..... UOC:A13,A14,H13,H14	3
15	PFOZZ	5310012087576	19207	12338095	WASHER,FLAT 11/32,PART OF KIT P/N 5590244..... UOC:A13,A14,H13,H14	3
16	PAOZZ	5310012531615	34623	5592958	NUT,SELF-LOCKING,HE 5/16-18,PART OF KIT P/N 5590244.....	3

(1) ITEM NO	(2) SMR CODE	(3) NSN	(4) CAGEC	(5) PART NUMBER	(6) DESCRIPTION AND USABLE ON CODES(UOC)	(7) QTY
					UOC:A13,A14,H13,H14	
17	PAOZZ	5310000453296	96906	MS35338-43	WASHER,LOCK #10,PART OF KIT P/N 5590244.....	1
					UOC:A13,A14,H13,H14	
18	PAOZZ	5340008338476	96906	MS21333-122	CLAMP,LOOP PART OF KIT P/N 5590244.	1
					UOC:A13,A14,H13,H14	
19	PAOZZ	5340000572906	96906	MS21333-73	CLAMP,LOOP PART OF KIT P/N 5590244.	1
					UOC:A13,A14,H13,H14	
20	PAOZZ	5340009226300	96906	MS21333-77	CLAMP,LOOP PART OF KIT P/N 5590244.	1
					UOC:A13,A14,H13,H14	
21	PAOZZ	5340007247038	96906	MS21333-76	CLAMP,LOOP PART OF KIT P/N 5590244.	1
					UOC:A13,A14,H13,H14	
22	PAOZZ	5340000502740	96906	MS21333-75	CLAMP,LOOP PART OF KIT P/N 5590244.	4
					UOC:A13,A14,H13,H14	
23	PAOZZ	5305012854234	24617	9414241	SCREW,MACHINE #10-32 X .75,PART OF KIT P/N 5590244.....	6
					UOC:A13,A14,H13,H14	
24	PAOZZ	5340000572904	96906	MS21333-71	CLAMP,LOOP PART OF KIT P/N 5590244.	7
					UOC:A13,A14,H13,H14	
25	PAOZZ	5305000593661	96906	MS51958-65	SCREW,MACHINE #10-32 X 3/4,PART OF KIT P/N 5590244.....	1
					UOC:A13,A14,H13,H14	
26	PAOZZ	5310001249265	72582	271169	NUT,PLAIN,ASSEMBLED #10-32,PART OF KIT P/N 5590244.....	3
					UOC:A13,A14,H13,H14	
27	PAOZZ	5340000886655	96906	MS21333-101	CLAMP,LOOP PART OF KIT P/N 5590244.	1
					UOC:A13,A14,H13,H14	
28	PAOZZ	5975012055379	96906	MS3367-7	STRAP,TIEDOWN,ELECT PART OF KIT P/N 5590244.....	2
					UOC:A13,A14,H13,H14	
29	PAOZZ	5305000711322	96906	MS51960-65	SCREW,MACHINE #10-32 X 1/2,PART OF KIT P/N 5590244.....	1
					UOC:A13,A14,H13,H14	
30	PAOZZ	5305000680502	96906	MS90725-6	SCREW,CAP,HEXAGON H 1/4-20 X 3/4, PART OF KIT P/N 5590244.....	4
					UOC:A13,A14,H13,H14	
31	PAOZZ	5325012055378	19207	12338084	GROMMET PART OF KIT P/N 5590244....	1
					UOC:A13,A14,H13,H14	
32	PAOZZ	2590004543620	34623	809223	RETAINER ASSEMBLY PART OF KIT P/N 5590244.....	2
					UOC:A13,A14,H13,H14	
33	PAOZZ	5310011520598	24617	271172	NUT,SELF-LOCKING 1/4-20,PART OF KIT P/N 5590244.....	4
					UOC:A13,A14,H13,H14	
34	PAOZZ	5310012538440	34623	5596566	WASHER,LOCK 1/2,PART OF KIT P/N 5590244.....	2
					UOC:A13,A14,H13,H14	
35	PAOZZ	5310000034094	96906	MS35338-48	WASHER,LOCK 1/2,PART OF KIT P/N 5590244.....	2
					UOC:A13,A14,H13,H14	
36	PAOZZ	5325012053203	19207	12338085	GROMMET PART OF KIT P/N 5590244....	1
					UOC:A13,A14,H13,H14	
37	PAOZZ	5310005825965	96906	MS35338-44	WASHER,LOCK 1/4,PART OF KIT P/N	1

(1) ITEM NO	(2) SMR CODE	(3) NSN	(4) CAGEC	(5) PART NUMBER	(6) DESCRIPTION AND USABLE ON CODES(UOC)	(7) QTY
					5590244.....	
KIT	PDOZZ	5999011975465	34623	5590244	PARTS KIT,ELECTRONI RAIDO,AN/GRC-	1
					160,AN/VRC-46,AND TSEC KY-57,CARGO..	
					UOC:A13,A14,H13,H14	
					BOLT,MACHINE (9) 409-1	
					BOLT,MACHINE (3) 410-8	
					BOLT,SELF-LOCKING (2) 409-5	
					BRACKET,HEAD PHONE (1) 409-11	
					BRACKET,RADIO (2) 409-6	
					CABLE ASSEMBLY,RADI(1) 410-1	
					CABLE ASSEMBLY,SPEC(1) 410-2	
					CABLE ASSEMBLY,SPEC(1) 410-3	
					CLAMP,LOOP (7) 410-24	
					CLAMP,LOOP (1) 410-20	
					CLAMP,LOOP (1) 410-19	
					CLAMP,LOOP (1) 410-27	
					CLAMP,LOOP (1) 410-21	
					CLAMP,LOOP (4) 410-22	
					CLAMP,LOOP (1) 410-18	
					GROMMET (1) 410-36	
					GROMMET (1) 410-31	
					GROMMET,NONMETALLIC(1) 410-10	
					MOUNTING BASE,ELECT(1) 409-3	
					NUT,PLAIN,ASSEMBLED(3) 410-26	
					NUT,SELF-LOCKING (2) 409-9	
					NUT,SELF-LOCKING (4) 410-33	
					NUT,SELF-LOCKING (9) 409-4	
					NUT,SELF-LOCKING (2) 409-8	
					NUT,SELF-LOCKING (3) 410-16	
					NUT,SELF-LOCKING (4) 410-9	
					NUT,SELF-LOCKING (1) 410-11	
					RETAINER ASSEMBLY (2) 410-32	
					SCREW,CAP,HEXAGON H(4) 410-30	
					SCREW,CAP,HEXAGON H(4) 410-4	
					SCREW,MACHINE (3) 410-14	
					SCREW,MACHINE (2) 409-12	
					SCREW,MACHINE (6) 410-23	
					SCREW,MACHINE (1) 410-25	
					SCREW,MACHINE (1) 410-29	
					STRAP (2) 410-28	
					STRIP,ELECTRIC,GR (1) 410-12	
					SUPPORT,ANTENNA (1) 410-6	
					WASHER,FLAT (3) 410-15	
					WASHER,FLAT (3) 410-7	
					WASHER,FLAT (18) 409-2	
					WASHER,FLAT (2) 409-7	
					WASHER,FLAT (2) 409-10	
					WASHER,FLAT (8) 410-5	
					WASHER,LOCK (1) 410-17	
					WASHER,LOCK (2) 410-34	
					WASHER,LOCK (1) 410-13	
					WASHER,LOCK (2) 410-35	
					WASHER,LOCK (1) 410-37	

END OF FIGURE

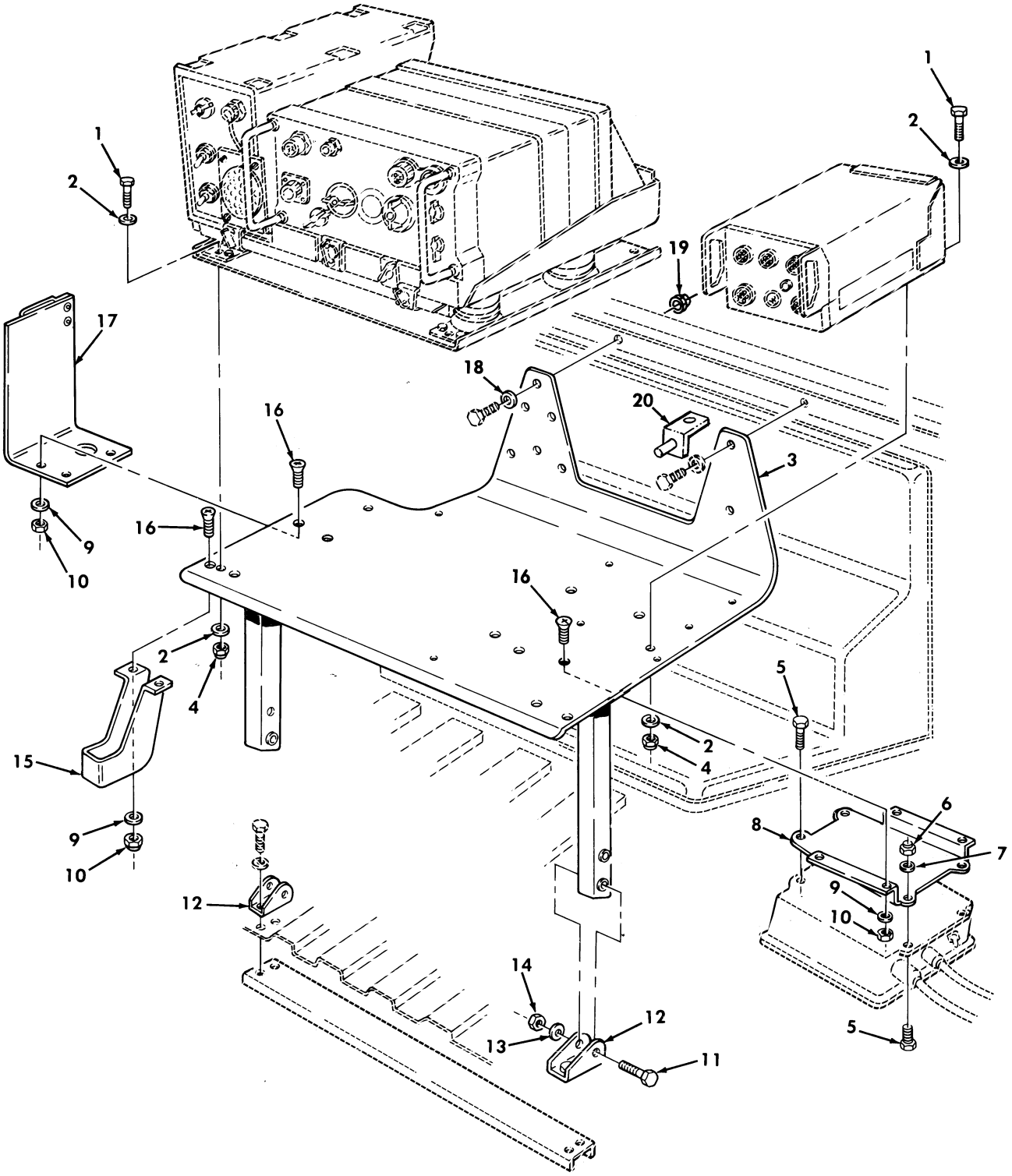

Figure 411. Communications Kit, Radio Rack Assembly, and Mounting Hardware, AN/GRC-160 and TSEC/KY-57, TOW Carrier.

(1) ITEM NO	(2) SMR CODE	(3) NSN	(4) CAGEC	(5) PART NUMBER	(6) DESCRIPTION AND USABLE ON CODES(UOC)	(7) QTY
					GROUP 3307 SPECIAL PURPOSE KITS	
					FIG. 411 COMMUNICATIONS KIT,RADIO RACK ASSEMBLY,AND MOUNTING HARDWARE, AN/GRC-160 AND TSEC/KY-57,TOW CARRIER	
1	PAOZZ	5306002258499	96906	MS90725-34	BOLT,MACHINE 5/16-18 X 1.00..... UOC:A11,A24,A27,B24,H11,H24,H27,MMM	8
2	PAOZZ	5310011023270	24617	2436161	WASHER,FLAT 1/4..... UOC:A11,A24,A27,B24,H11,H24,H27,MMM	16
3	PFOZZ	5975011975505	19207	12340167	MOUNTING BASE,ELECT PART OF KIT P/N 5705689..... UOC:A11,A24,A27,B24,H11,H24,H27,MMM	1
4	PAOZZ	5310008140673	96906	MS51943-33	NUT,SELF-LOCKING,HE 5/16-18..... UOC:A11,A24,A27,B24,H11,H24,H27,MMM	8
5	PAOZZ	5305002400194	96906	MS51849-76	SCREW,MACHINE #10-24 X 3/4..... UOC:A11,A24,A27,B24,H11,H24,H27,MMM	4
6	PAOZZ	5310012699245	24617	190254	NUT,SELF-LOCKING,HE #10-24..... UOC:A11,A24,A27,B24,H11,H24,H27,MMM	4
7	PAOZZ	5310000145850	96906	MS27183-42	WASHER,FLAT #10..... UOC:A11,A24,A27,B24,H11,H24,H27,MMM	4
8	PAOZZ	2540012028548	19207	12340153	BRACE,RADIO MOUNTIN PART OF KIT P/N 5705689..... UOC:A11,A24,A27,B24,H11,H24,H27,MMM	1
9	PAOZZ	5310011023270	24617	2436161	WASHER,FLAT 1/4..... UOC:A11,A24,A27,B24,H11,H24,H27,MMM	9
10	PAOZZ	5310000131245	21450	131245	NUT,SELF-LOCKING,HE 1/4-20..... UOC:A11,A24,A27,B24,H11,H24,H27,MMM	9
11	PAOZZ	5306010684592	96906	MS35764-1303	BOLT,SELF-LOCKING 3/8-16 X 2.25, PART OF KIT P/N 5705689..... UOC:A11,A24,A27,B24,H11,H24,H27,MMM	2
12	PFOZZ	2590012028546	19207	12340134	BRACKET,RADIO PART OF KIT P/N 5705689..... UOC:A11,A24,A27,B24,H11,H24,H27,MMM	2
13	PAOZZ	5310014124013	24617	2436163	WASHER,FLAT 3/8..... UOC:A11,A24,A27,B24,H11,H24,H27,MMM	2
14	PAOZZ	5310009359021	96906	MS51943-35	NUT,SELF-LOCKING,HE 3/8-16..... UOC:A11,A24,A27,B24,H11,H24,H27,MMM	2
15	PFOZZ	2540012028545	19207	12340131	BRACKET,HEAD PHONE PART OF KIT P/N 5705689..... UOC:A11,A24,A27,B24,H11,H24,H27,MMM	1
16	PAOZZ	5305007195021	96906	MS51959-81	SCREW,MACHINE 1/4-20 X .75..... UOC:A11,A24,A27,B24,H11,H24,H27,MMM	9
17	PFOZZ	5340012097386	19207	12340151	BRACKET,ANGLE PART OF KIT P/N 5705689..... UOC:A11,A24,A27,B24,H11,H24,H27,MMM	1
18	PAOZZ	5310011708705	24617	9419265	WASHER,FLAT..... UOC:B24	2
19	PAOZZ	5310009359022	96906	MS51943-32	NUT,SELF-LOCKING,HE..... UOC:B24	2
20	PFOZZ	2590014398268	19207	12446763	BRACKET,ANGLE..... UOC:B24	1

END OF FIGURE

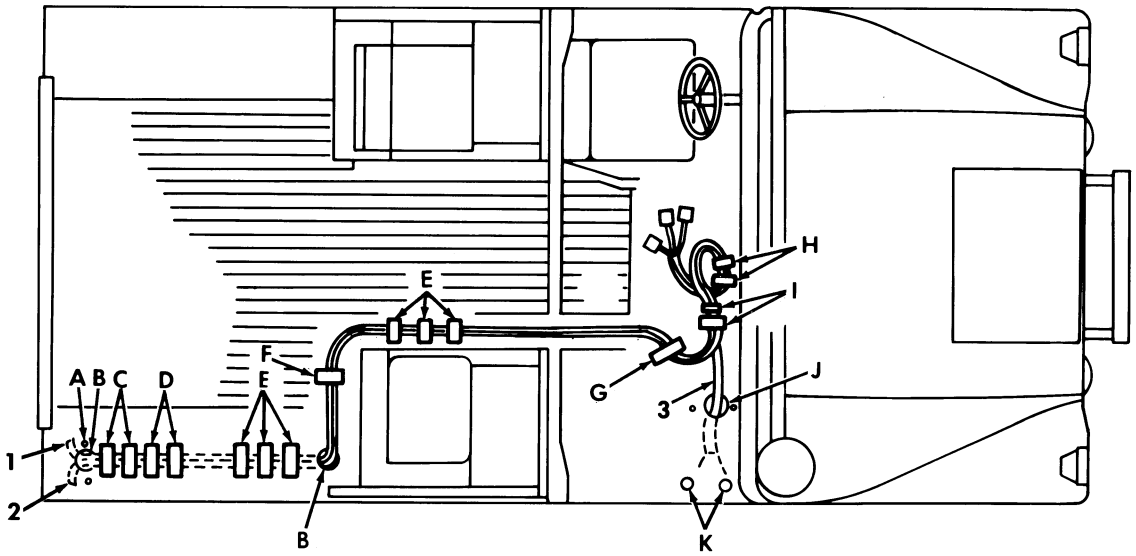

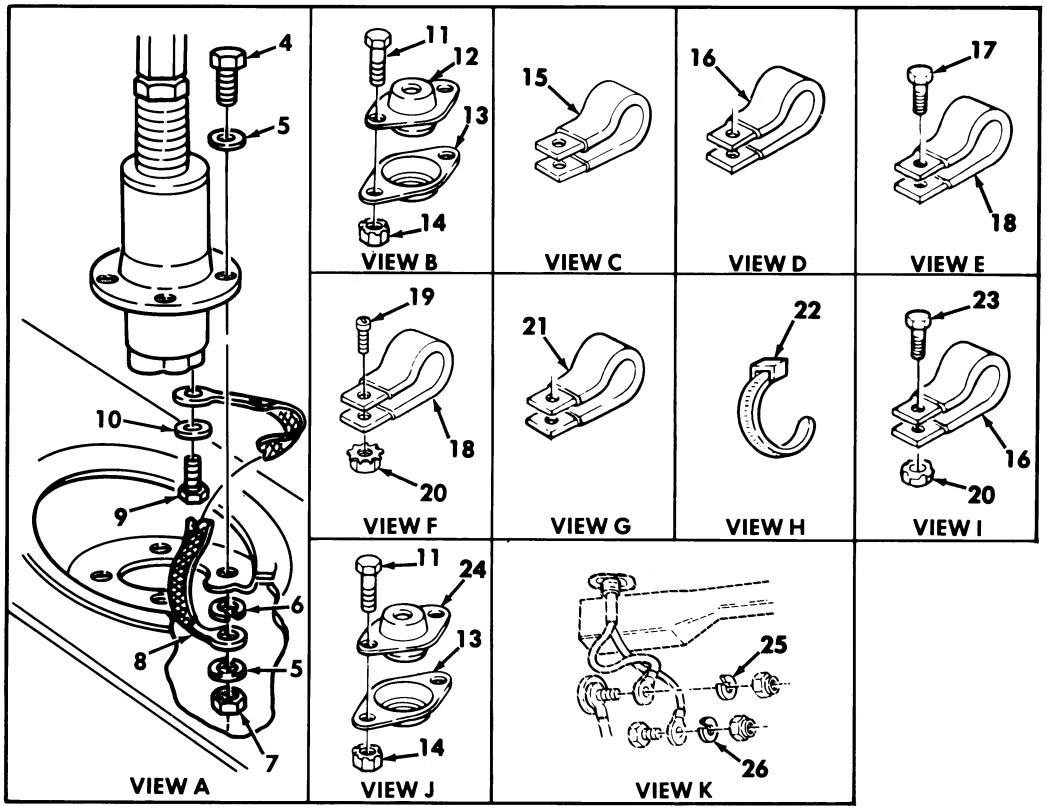

Figure 412. Communications Kit, Radio Cables, AN/GRC-160, AN/VRC-46, and TSEC/KY-57, TOW Carrier.

(1) ITEM NO	(2) SMR CODE	(3) NSN	(4) CAGEC	(5) PART NUMBER	(6) DESCRIPTION AND USABLE ON CODES(UOC)	(7) QTY
					GROUP 3307 SPECIAL PURPOSE KITS	
					FIG. 412 COMMUNICATIONS KIT,RADIO CABLES,AN/GRC-160,AN/VRC-46,AND TSEC/KY-57,TOW CARRIER	
1	PAOZZ	5995012017495	34623	5589167	CABLE ASSEMBLY,RADI PART OF KIT P/N 5705689..... UOC:A11,A24,A27,B24,H11,H24,H27,MMM	1
2	PAOZZ	5995012014129	19207	12338089-3	CABLE ASSEMBLY,SPEC PART OF KIT P/N 5705689..... UOC:A11,A24,A27,B24,H11,H24,H27,MMM	1
3	PAOZZ	5995012014128	19207	12338088	CABLE ASSEMBLY,SPEC PART OF KIT P/N 5705689..... UOC:A11,A24,A27,B24,H11,H24,H27,MMM	1
4	PAOZZ	5305007829489	80204	B1821BH038C200N	SCREW,CAP,HEXAGON H 3/8-16 X 2.00, PART OF KIT P/N 5705689..... UOC:A11,A24,A27,B24,H11,H24,H27,MMM	4
5	PAOZZ	5310014124013	24617	2436163	WASHER,FLAT 3/8..... UOC:A11,A24,A27,B24,H11,H24,H27,MMM	8
6	PAOZZ	5310000453299	96906	MS35333-42	WASHER,LOCK 3/8..... UOC:A11,A24,A27,B24,H11,H24,H27,MMM	1
7	PAOZZ	5310009359021	96906	MS51943-35	NUT,SELF-LOCKING,HE 3/8-16..... UOC:A11,A24,A27,B24,H11,H24,H27,MMM	4
8	PAOZZ	5940012048830	34623	5591200	TERMINAL STRIP,GROU PART OF KIT P/N 5705689..... UOC:A11,A24,A27,B24,H11,H24,H27,MMM	1
9	PAOZZ	5305000593659	96906	MS51958-63	SCREW,MACHINE #10-32 X 1/2,PART OF KIT P/N 5705689..... UOC:A11,A24,A27,B24,H11,H24,H27,MMM	2
10	PAOZZ	5310000453296	96906	MS35338-43	WASHER,LOCK 3/8,PART OF KIT P/N 5705689..... UOC:A11,A24,A27,B24,H11,H24,H27,MMM	1
11	PAOZZ	5305000680502	96906	MS90725-6	SCREW,CAP,HEXAGON H 1/4-20 X 3/4, PART OF KIT P/N 5705689..... UOC:A11,A24,A27,B24,H11,H24,H27,MMM	6
12	PAOZZ	5325012053203	19207	12338085	GROMMET PART OF KIT P/N 5705689.... UOC:A11,A24,A27,B24,H11,H24,H27,MMM	2
13	PAOZZ	2590004543620	19207	809223	RETAINER ASSEMBLY PART OF KIT P/N 5705689..... UOC:A11,A24,A27,B24,H11,H24,H27,MMM	3
14	PAOZZ	5310011520598	24617	271172	NUT,SELF-LOCKING,HE 1/4-20,PART OF KIT P/N 5705689..... UOC:A11,A24,A27,B24,H11,H24,H27,MMM	6
15	PAOZZ	5340008338476	96906	MS21333-122	CLAMP,LOOP PART OF KIT P/N 5705689. UOC:A11,A24,A27,B24,H11,H24,H27,MMM	2
16	PAOZZ	5340000502740	96906	MS21333-75	CLAMP,LOOP PART OF KIT P/N 5705689. UOC:A11,A24,A27,B24,H11,H24,H27,MMM	4
17	PAOZZ	5305012596322	34623	5593913	SCREW,MACHINE #10-32 X 3/4,PART OF KIT P/N 5705689..... UOC:A11,A24,A27,B24,H11,H24,H27,MMM	6
18	PAOZZ	5340000572904	96906	MS21333-71	CLAMP,LOOP PART OF KIT P/N 5705689. UOC:A11,A24,A27,B24,H11,H24,H27,MMM	7

(1) ITEM NO	(2) SMR CODE	(3) NSN	(4) CAGEC	(5) PART NUMBER	(6) DESCRIPTION AND USABLE ON CODES(UOC)	(7) QTY
19	PAOZZ	5305000593661	96906	MS51958-65	SCREW,MACHINE #10-32 X 3/4,PART OF KIT P/N 5705689..... UOC:A11,A24,A27,B24,H11,H24,H27,MMM	1
20	PAOZZ	5310012510726	34623	5593053	NUT,SELF-LOCKING,HE #10-32..... UOC:A11,A24,A27,B24,H11,H24,H27,MMM	3
21	PAOZZ	5340008546729	96906	MS21333-103	CLAMP,LOOP..... UOC:A11,A24,A27,B24,H11,H24,H27,MMM	1
22	PAOZZ	5975012055379	96906	MS3367-7	STRAP PART OF KIT P/N 5705689..... UOC:A11,A24,A27,B24,H11,H24,H27,MMM	2
23	PAOZZ	5305009847363	96906	MS35191-272	SCREW,MACHINE #10-32 X 1/2,PART OF KIT P/N 5705689..... UOC:A11,A24,A27,B24,H11,H24,H27,MMM	2
24	PAOZZ	5325012055378	19207	12338084	GROMMET PART OF KIT P/N 5705689.... UOC:A11,A24,A27,B24,H11,H24,H27,MMM	1
25	PFOZZ	5310012538440	34623	5596566	WASHER,LOCK 1/2..... UOC:A11,A24,A27,B24,H11,H24,H27,MMM	1
26	PAOZZ	5310000034094	96906	MS35338-48	WASHER,LOCK 1/2..... UOC:A11,A24,A27,B24,H11,H24,H27,MMM	1
KIT	PDOZZ	5895011975467	34623	5705689	PARTS KIT,ELECTRONI RADIO,AN/GRC-160,AN/VRC-46,AND TSEC/KY-57,TOW CARRIER..... UOC:A11,A24,A27,B24,H11,H24,H27,MMM	1
					BOLT,SELF-LOCKING (2) 411-11	
					BRACE,RADIO MOUNTIN(1) 411-8	
					BRACKET,HEAD PHONE (1) 411-15	
					BRACKET,ANGLE (1) 411-17	
					BRACKET,RADIO (2) 411-12	
					CABLE ASSEMBLY,RADI(1) 412-1	
					CABLE ASSEMBLY,SPEC(1) 412-3	
					CABLE ASSEMBLY,SPEC(1) 412-2	
					CLAMP,LOOP (2) 412-15	
					CLAMP,LOOP (4) 412-16	
					CLAMP,LOOP (7) 412-18	
					GROMMET (1) 412-24	
					GROMMET (2) 412-12	
					MOUNTING BASE,ELECT(1) 411-3	
					RETAINER ASSEMBLY (3) 411-13	
					NUT,SELF-LOCKING (6) 412-14	
					SCREW,CAP,HEXAGON H(6) 412-11	
					SCREW,CAP,HEXAGON H(4) 412-4	
					SCREW,MACHINE (2) 412-23	
					SCREW,MACHINE (2) 412-9	
					SCREW,MACHINE (6) 412-17	
					SCREW,MACHINE (1) 412-19	
					STRAP (2) 412-22	
					TERMINAL STRIP (1) 412-8	
					WASHER,LOCK (1) 412-10	

END OF FIGURE

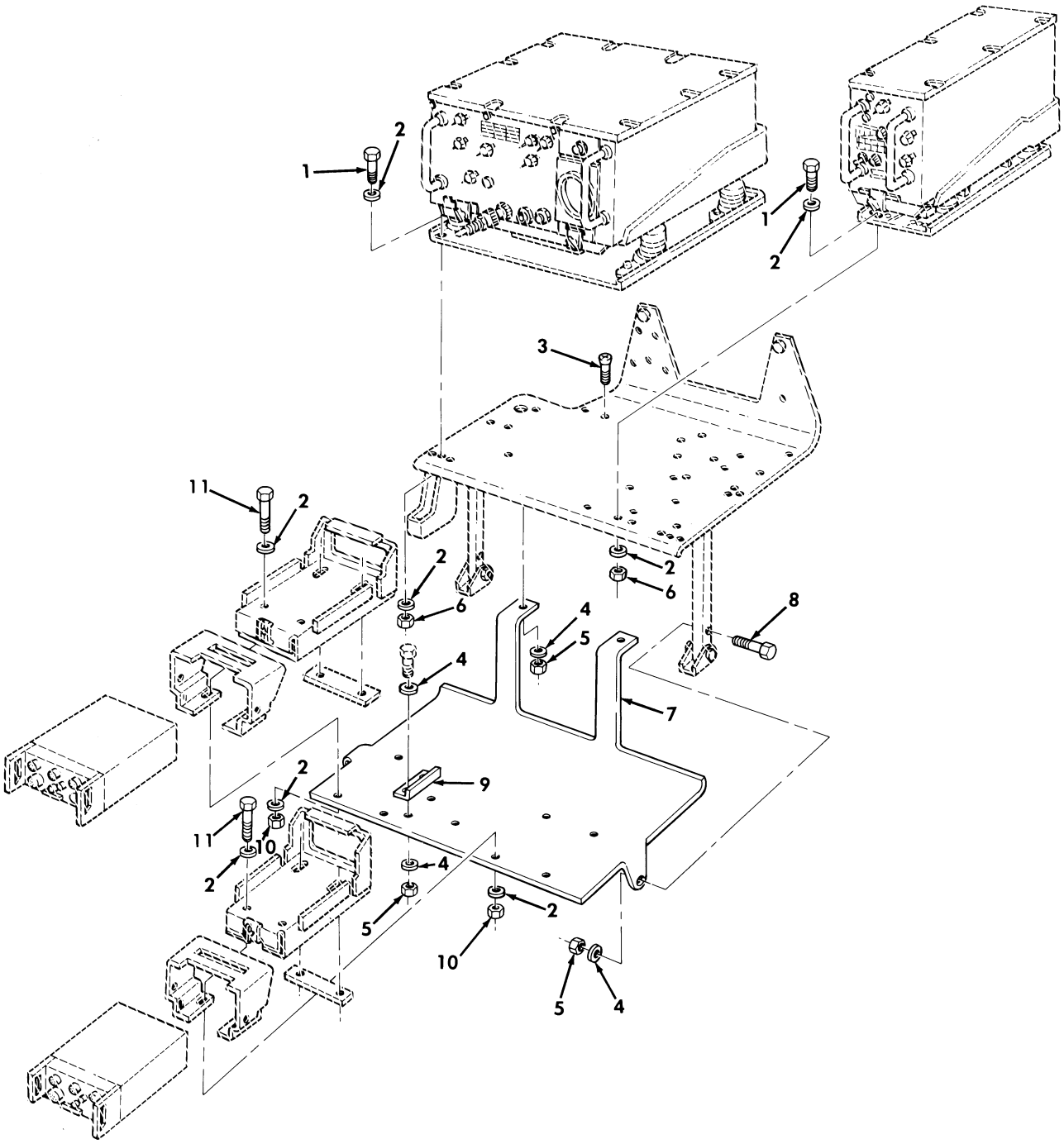

Figure 413. Communications Kit, Radio Rack Assembly, AN/VRC-47 and (2) TSEC/KY-57 Assemblies.

(1) ITEM NO	(2) SMR CODE	(3) NSN	(4) CAGEC	(5) PART NUMBER	(6) DESCRIPTION AND USABLE ON CODES(UOC)	(7) QTY
					GROUP 3307 SPECIAL PURPOSE KITS	
					FIG. 413 COMMUNICATIONS KIT,RADIO RACK ASSEMBLY,AN/VRC-47 AND (2) TSEC/KY-57 ASSEMBLIES	
1	PAOZZ	5306002258499	96906	MS90725-34	BOLT,MACHINE 5/16-18 X 1.00,PART OF KIT P/N PPL-10323..... UOC:AVY,A13,A14,BVY,B17,B18,C17,HVY, H13,H14,H17,H18,NNN	8
2	PAOZZ	5310012520512	34623	5592832	WASHER,FLAT 5/16,PART OF IT P/N PPL-10323..... UOC:AVY,A13,A14,BVY,B17,B18,C17,HVY, H13,H14,H17,H18,NNN	32
3	PAOZZ	5305007195021	96906	MS51959-81	SCREW,MACHINE 1/4-20 X .75,PART OF KIT P/N PPL-10323..... UOC:AVY,A13,A14,BVY,B17,B18,C17,HVY, H13,H14,H17,H18,NNN	2
4	PAOZZ	5310011023270	24617	2436161	WASHER,FLAT 1/4,PART OF KIT P/N PPL-10323..... UOC:AVY,A13,A14,BVY,B17,B18,C17,HVY, H13,H14,H17,H18,NNN	8
5	PAOZZ	5310000614650	96906	MS51943-31	NUT,SELF-LOCKING,HE 1/4-20,PART OF KIT P/N PPL-10323..... UOC:AVY,A13,A14,BVY,B17,B18,C17,HVY, H13,H14,H17,H18,NNN	6
6	PAOZZ	5310008140673	96906	MS51943-33	NUT,SELF-LOCKING,HE 5/16-18,PART OF KIT P/N PPL-10323..... UOC:AVY,A13,A14,BVY,B17,B18,C17,HVY, H13,H14,H17,H18,NNN	8
7	PAOZZ	2540012491589	19207	12340641	SHELF,AUXILIARY PART OF KIT P/N PPL-10323..... UOC:AVY,A13,A14,BVY,B17,B18,C17,HVY, H13,H14,H17,H18,NNN	1
8	PAOZZ	5305000712237	96906	MS90725-14	SCREW,CAP,HEXAGON H 1/4-20 X 2.00, PART OF KIT P/N PPL-10323..... UOC:AVY,A13,A14,BVY,B17,B18,C17,HVY, H13,H14,H17,H18,NNN	2
9	PAOZZ	5340012551109	19207	12340635	BRACKET,ANGLE PART OF KIT P/N PPL-10323..... UOC:AVY,A13,A14,BVY,B17,B18,C17,HVY, H13,H14,H17,H18,NNN	1
10	PAOZZ	5310012559452	34623	5593027	NUT,PLAIN,HEXAGON 5/16-24,PART OF KIT P/N PPL-10323..... UOC:AVY,A13,A14,BVY,B17,B18,C17,HVY, H13,H14,H17,H18,NNN	8
11	PAOZZ	5306000514077	80204	B1821BH031F113N	BOLT,MACHINE 5/16-24 X 1.125,PART OF KIT P/N 5705689..... UOC:AVY,A13,A14,BVY,B17,B18,C17,HVY, H13,H14,H17,H18,NNN	8

END OF FIGURE

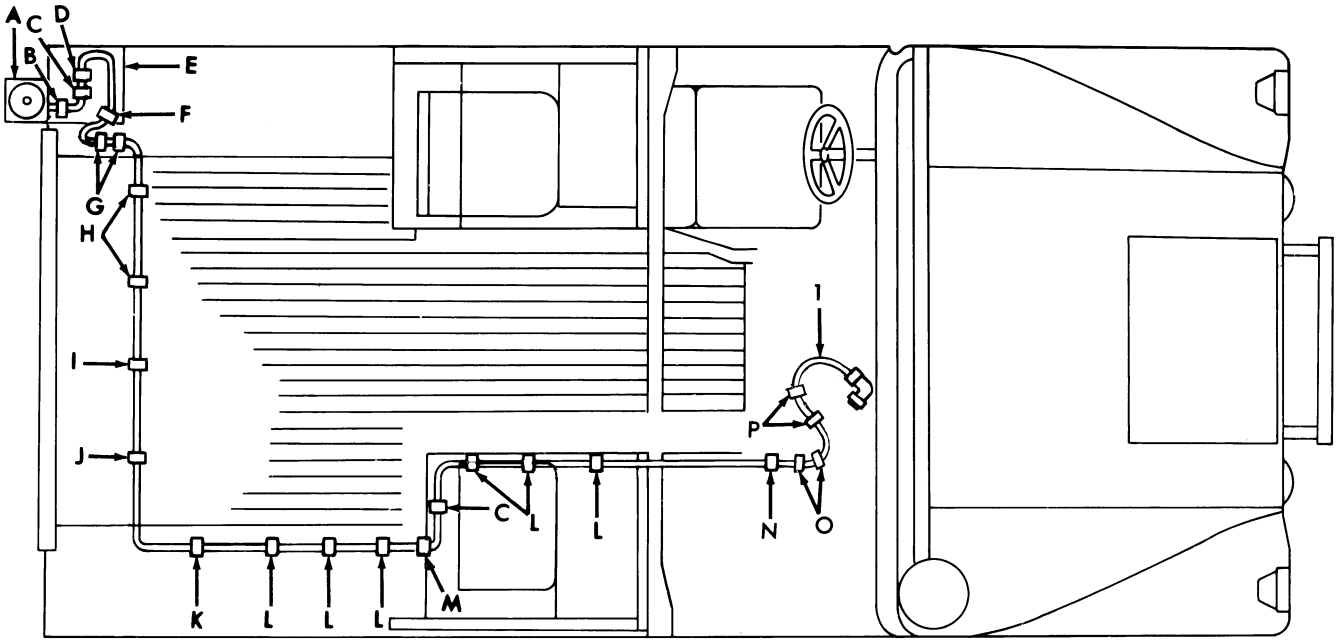

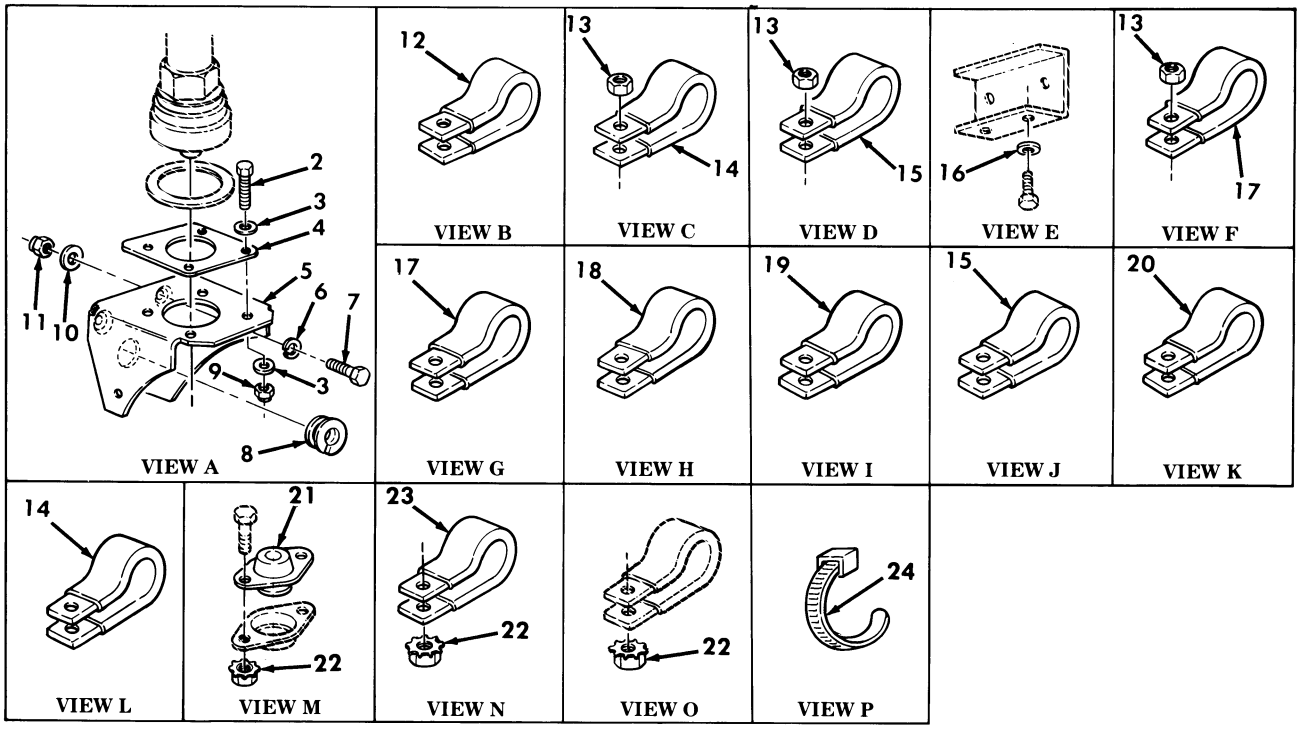

Figure 414. Communications Kit, Radio Cables, AN/VRC-47, and (2) TSEC/KY-57 Assemblies.

(1) ITEM NO	(2) SMR CODE	(3) NSN	(4) CAGEC	(5) PART NUMBER	(6) DESCRIPTION AND USABLE ON CODES(UOC)	(7) QTY
					GROUP 3307 SPECIAL PURPOSE KITS	
					FIG. 414 COMMUNICATIONS KIT,RADIO CABLES,AN/VRC-47 AND (2) TSEC/KY-57 ASSEMBLIES	
1	PAOZZ	5995012519316	19207	12338086-4	CABLE ASSEMBLY,RADI PART OF KIT P/N PPL-10323..... UOC:AVY,A13,A14,BVY,B17,B18,C17,HVY, H13,H14,H17,H18,NNN	1
2	PAOZZ	5305008213869	80204	B1821BH038C175N	SCREW,CAP,HEXAGON H 3/8-16 X 1.75 PART OF KIT P/N PPL-10323..... UOC:AVY,A13,A14,BVY,B17,B18,C17,HVY, H13,H14,H17,H18,NNN	4
3	PAOZZ	5310014124013	24617	2436163	WASHER,FLAT 3/8 PART OF KIT P/N PPL-10323..... UOC:AVY,A13,A14,BVY,B17,B18,C17,HVY, H13,H14,H17,H18,NNN	8
4	PAOZZ	5985012533514	19207	12340637	ADAPTER,ANTENNA TO PART OF KIT P/N PPL-10323..... UOC:AVY,A13,A14,BVY,B17,B18,C17,HVY, H13,H14,H17,H18,NNN	1
5	PAOZZ	5985012159404	80063	A3046166	SUPPORT,ANTENNA PART OF KIT P/N PPL-10323..... UOC:AVY,A13,A14,BVY,B17,B18,C17,HVY, H13,H14,H17,H18,NNN	1
6	PAOZZ	5310012520512	34623	5592832	WASHER,FLAT 5/16 PART OF KIT P/N PPL-10323..... UOC:AVY,A13,A14,BVY,B17,B18,C17,HVY, H13,H14,H17,H18,NNN	3
7	PAOZZ	5306002258499	96906	MS90725-34	BOLT,MACHINE 5/16-18 X 1.00 PART OF KIT P/N PPL-10323..... UOC:AVY,A13,A14,BVY,B17,B18,C17,HVY, H13,H14,H17,H18,NNN	3
8	PAOZZ	5325012085424	19207	12338098	GROMMET,NONMETALLIC PART OF KIT P/N PPL-10323..... UOC:AVY,A13,A14,BVY,B17,B18,C17,HVY, H13,H14,H17,H18,NNN	1
9	PAOZZ	5310009359021	96906	MS51943-35	NUT,SELF-LOCKING,HE 3/8-16 PART OF KIT P/N PPL-10323..... UOC:AVY,A13,A14,BVY,B17,B18,C17,HVY, H13,H14,H17,H18,NNN	4
10	PAOZZ	5310012087576	19207	12338095	WASHER,FLAT 5/16 PART OF KIT P/N PPL-10323..... UOC:AVY,A13,A14,BVY,B17,B18,C17,HVY, H13,H14,H17,H18,NNN	3
11	PAOZZ	5310008140673	96906	MS51943-33	NUT,SELF-LOCKING,HE 5/16-18 PART OF KIT P/N PPL-10323..... UOC:AVY,A13,A14,BVY,B17,B18,C17,HVY, H13,H14,H17,H18,NNN	3
12	PAOZZ	5340000509077	96906	MS21333-119	CLAMP,LOOP PART OF KIT P/N PPL-10323 UOC:AVY,A13,A14,BVY,B17,B18,C17,HVY, H13,H14,H17,H18,NNN	1

(1) ITEM NO	(2) SMR CODE	(3) NSN	(4) CAGEC	(5) PART NUMBER	(6) DESCRIPTION AND USABLE ON CODES(UOC)	(7) QTY
13	PAOZZ	5310001249265	72582	271169	NUT,PLAIN,ASSEMBLED #10-32 PART OF KIT P/N PPL-10323..... UOC:AVY,A13,A14,BVY,B17,B18,C17,HVY, H13,H14,H17,H18,NNN	6
14	PAOZZ	5340000572904	96906	MS21333-71	CLAMP,LOOP PART OF KIT P/N PPL-10323 UOC:AVY,A13,A14,BVY,B17,B18,C17,HVY, H13,H14,H17,H18,NNN	8
15	PAOZZ	5340009899222	96906	MS21333-74	CLAMP,LOOP PART OF KIT P/N PPL-10323 UOC:AVY,A13,A14,BVY,B17,B18,C17,HVY, H13,H14,H17,H18,NNN	2
16	PAOZZ	5310005825965	96906	MS35338-44	WASHER,LOCK 1/4 PART OF KIT P/N PPL -10323..... UOC:AVY,A13,A14,BVY,B17,B18,C17,HVY, H13,H14,H17,H18,NNN	2
17	PAOZZ	5340000572906	96906	MS21333-73	CLAMP,LOOP PART OF KIT P/N PPL-10323 UOC:AVY,A13,A14,BVY,B17,B18,C17,HVY, H13,H14,H17,H18,NNN	2
18	PAOZZ	5340007247038	96906	MS21333-76	CLAMP,LOOP PART OF KIT P/N PPL-10323 UOC:AVY,A13,A14,BVY,B17,B18,C17,HVY, H13,H14,H17,H18,NNN	2
19	PAOZZ	5340009226300	96906	MS21333-77	CLAMP,LOOP PART OF KIT P/N PPL-10323 UOC:AVY,A13,A14,BVY,B17,B18,C17,HVY, H13,H14,H17,H18,NNN	1
20	PAOZZ	5340000502740	96906	MS21333-75	CLAMP,LOOP PART OF KIT P/N PPL-10323 UOC:AVY,A13,A14,BVY,B17,B18,C17,HVY, H13,H14,H17,H18,NNN	1
21	PAOZZ	5325012555062	34623	5590029	GROMMET,NONMETALLIC PART OF KIT P/N PPL-10323..... UOC:AVY,A13,A14,BVY,B17,B18,C17,HVY, H13,H14,H17,H18,NNN	1
22	PAOZZ	5310012538380	34623	5592818	NUT,SELF-LOCKING,HE 1/4-20 PART OF KIT P/N PPL-10323..... UOC:AVY,A13,A14,BVY,B17,B18,C17,HVY, H13,H14,H17,H18,NNN	4
23	PAOZZ	5340009848540	96906	MS21333-102	CLAMP,LOOP PART OF KIT P/N PPL-10323 UOC:AVY,A13,A14,BVY,B17,B18,C17,HVY, H13,H14,H17,H18,NNN	1
24	PAOZZ	5975012055379	96906	MS3367-7	STRAP,TIEDOWN,ELECT PART OF KIT P/N PPL-10323..... UOC:AVY,A13,A14,BVY,B17,B18,C17,HVY, H13,H14,H17,H18,NNN	2
KIT	PDOZZ	5820012221107	80063	PPL-10323	TRANSITION KIT,ELEC RADIO RACK ASSEMBLY,AN/VRC-47 AND TSEC/KY-57... UOC:AVY,A13,A14,BVY,B17,B18,C17,HVY, H13,H14,H17,H18,NNN	1
					ADAPTER,ANTENNA TO (1) 414-4	
					BOLT,MACHINE (8) 413-1	
					BOLT,MACHINE (8) 413-11	
					BOLT,MACHINE (3) 414-7	
					BRACKET,ANGLE (1) 413-9	
					CABLE ASSEMBLY,RADI(1) 414-1	
					CLAMP,LOOP (1) 414-12	
					CLAMP,LOOP (8) 414-14	

(1) ITEM NO	(2) SMR CODE	(3) NSN	(4) CAGEC	(5) PART NUMBER	(6) DESCRIPTION AND USABLE ON CODES(UOC)	(7) QTY
					CLAMP,LOOP (2) 414-15	
					CLAMP,LOOP (2) 414-17	
					CLAMP,LOOP (2) 414-18	
					CLAMP,LOOP (1) 414-19	
					CLAMP,LOOP (1) 414-20	
					CLAMP,LOOP (1) 414-23	
					GROMMET,NONMETALLIC(1) 414-8	
					GROMMET,NONMETALLIC(1) 414-21	
					NUT,PLAIN,HEXAGON (8) 413-10	
					NUT,PLAIN,ASSEMBLED(6) 414-13	
					NUT,SELF-LOCKING,HE(6) 413-5	
					NUT,SELF-LOCKING,HE(8) 413-6	
					NUT,SELF-LOCKING,HE(4) 414-9	
					NUT,SELF-LOCKING,HE(3) 414-11	
					NUT,SELF-LOCKING,HE(4) 414-22	
					SCREW,CAP,HEXAGON H(2) 413-8	
					SCREW,CAP,HEXAGON H(4) 414-2	
					SCREW,MACHINE (2) 413-3	
					SHELF,AUXILIARY (1) 413-7	
					STRAP,TIEDOWN,ELECT(2) 414-24	
					SUPPORT,ANTENNA (1) 414-5	
					WASHER,FLAT (32) 413-2	
					WASHER,FLAT (8) 413-4	
					WASHER,FLAT (8) 414-3	
					WASHER,FLAT (3) 414-6	
					WASHER,FLAT (3) 414-10	
					WASHER,LOCK (2) 414-16	

END OF FIGURE

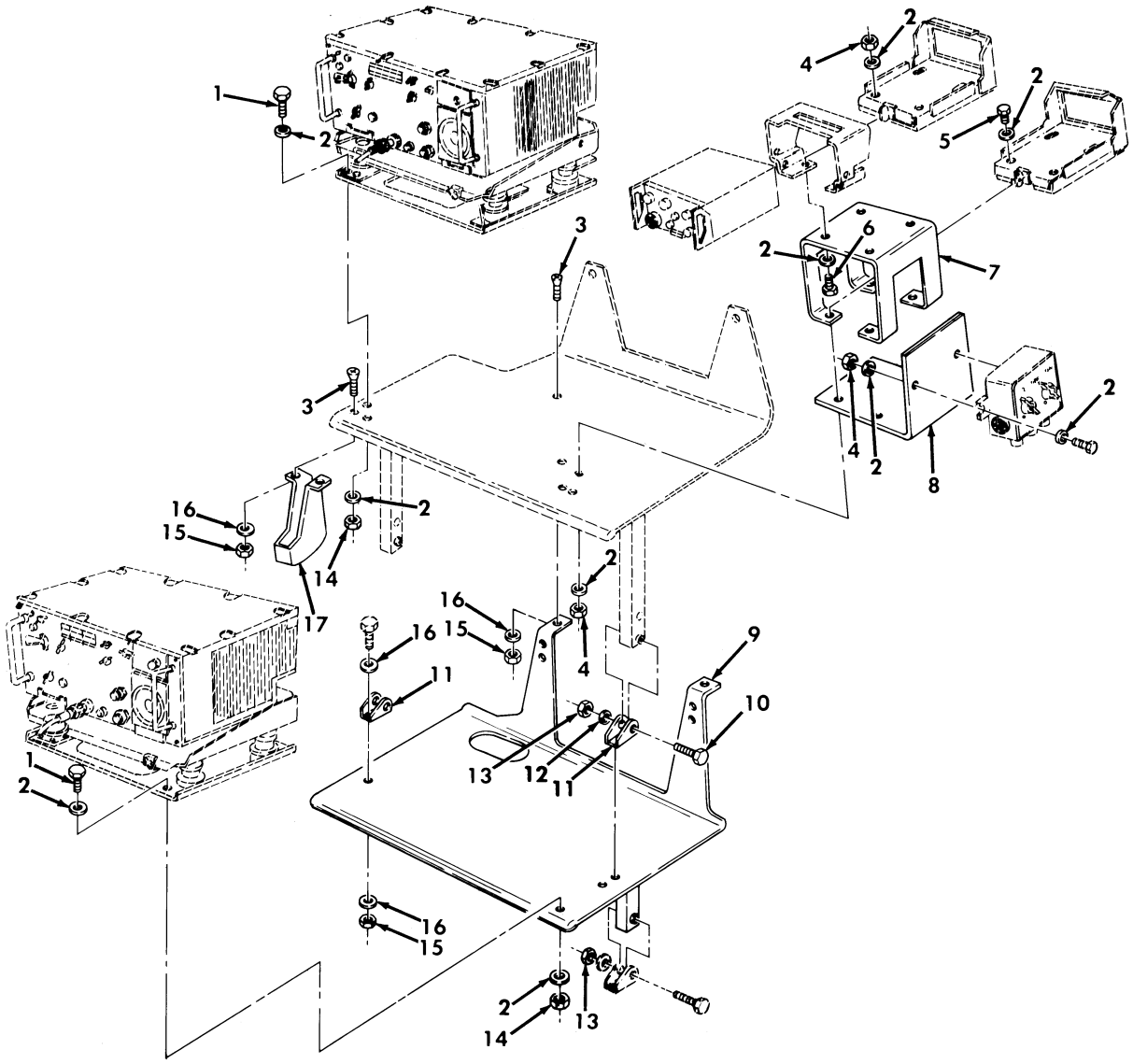

Figure 415. Communications Kit, Radio Rack Assembly, AN/VRC-49, and (2) TSEC/KY-57 Assemblies.

(1) ITEM NO	(2) SMR CODE	(3) NSN	(4) CAGEC	(5) PART NUMBER	(6) DESCRIPTION AND USABLE ON CODES(UOC)	(7) QTY
					GROUP 3307 SPECIAL PURPOSE KITS	
					FIG. 415 COMMUNICATIONS KIT,RADIO RACK ASSEMBLY,AN/VRC-49 AND (2) TSEC/KY-57 ASSEMBLIES	
1	PAOZZ	5306002558499	96906	MS90725-34	BOLT,MACHINE 5/16-18 X 1.00 PART OF KIT P/N PPL-10324..... UOC:AVY,A13,A14,BVY,HVY,H13,H14,NNN	10
2	PAOZZ	5310012520512	34623	5592832	WASHER,FLAT 5/16 PART OF KIT P/N PPL-10324..... UOC:AVY,A13,A14,BVY,HVY,H13,H14,NNN	40
3	PAOZZ	5305007195021	96906	MS51959-81	SCREW,MACHINE 1/4-20 X .75 PART OF KIT P/N PPL-10324..... UOC:AVY,A13,A14,BVY,HVY,H13,H14,NNN	6
4	PAOZZ	5310002416658	96906	MS51943-34	NUT,SELF-LOCKING,HE 5/16-24 PART OF KIT P/N PPL-10324..... UOC:AVY,A13,A14,BVY,HVY,H13,H14,NNN	10
5	PAOZZ	5306000514077	80204	B1821BH031F113N	BOLT,MACHINE 5/16-24 X 1.125 PART OF KIT P/N PPL-10324..... UOC:AVY,A13,A14,BVY,HVY,H13,H14,NNN	4
6	PAOZZ	5306012552662	34623	5593359	BOLT,MACHINE 5/16-24 X .88 PART OF KIT P/N PPL-10324..... UOC:AVY,A13,A14,BVY,HVY,H13,H14,NNN	4
7	PAOZZ	5340012491590	19207	12340639	BRACKET,MOUNTING PART OF KIT P/N PPL -10324..... UOC:AVY,A13,A14,BVY,HVY,H13,H14,NNN	1
8	PFOZZ	5340012559514	19207	12340636	BRACKET,ANGLE PART OF KIT P/N PPL-10324..... UOC:AVY,A13,A14,BVY,HVY,H13,H14,NNN	1
9	PAOZZ	2540012507590	19207	12340581	RACK ASSEMBLY,RADIO PART OF KIT P/N PPL-10324..... UOC:AVY,A13,A14,BVY,HVY,H13,H14,NNN	1
10	PAOZZ	5306010684592	96906	MS35764-1303	BOLT,SELF-LOCKING 3/8-16 X 2.25 PART OF KIT P/N PPL-10324..... UOC:AVY,A13,A14,BVY,HVY,H13,H14,NNN	2
11	PFOZZ	2590012028546	19207	12340134	BRACKET,VEHICULAR C PART OF KIT P/N PPL-10324..... UOC:AVY,A13,A14,BVY,HVY,H13,H14,NNN	2
12	PAOZZ	5310014124013	24617	2436163	WASHER,FLAT 3/8 PART OF KIT P/N PPL -10324..... UOC:AVY,A13,A14,BVY,HVY,H13,H14,NNN	2
13	PAOZZ	5310009359021	96906	MS51943-35	NUT,SELF-LOCKING,HE 3/8-16 PART OF KIT P/N PPL-10324..... UOC:AVY,A13,A14,BVY,HVY,H13,H14,NNN	4
14	PAOZZ	5310008140673	96906	MS51943-33	NUT,SELF-LOCKING,HE 5/16-18 PART OF KIT P/N PPL-10324..... UOC:AVY,A13,A14,BVY,HVY,H13,H14,NNN	10
15	PAOZZ	5310000614650	96906	MS51943-31	NUT,SELF-LOCKING,HE 1/4-20 PART OF KIT P/N PPL-10324..... UOC:AVY,A13,A14,BVY,HVY,H13,H14,NNN	10
16	PAOZZ	5310011023270	24617	2436161	WASHER,FLAT 1/4 PART OF KIT P/N PPL -10324.....	14

(1) ITEM NO	(2) SMR CODE	(3) NSN	(4) CAGEC	(5) PART NUMBER	(6) DESCRIPTION AND USABLE ON CODES(UOC)	(7) QTY
17	PFOZZ	2540012028545	19207	12340131	UOC:AVY,A13,A14,BVY,HVY,H13,H14,NNN BRACKET,HEAD PHONE PART OF KIT P/N PPL-10324..... UOC:AVY,A13,A14,BVY,HVY,H13,H14	1

END OF FIGURE

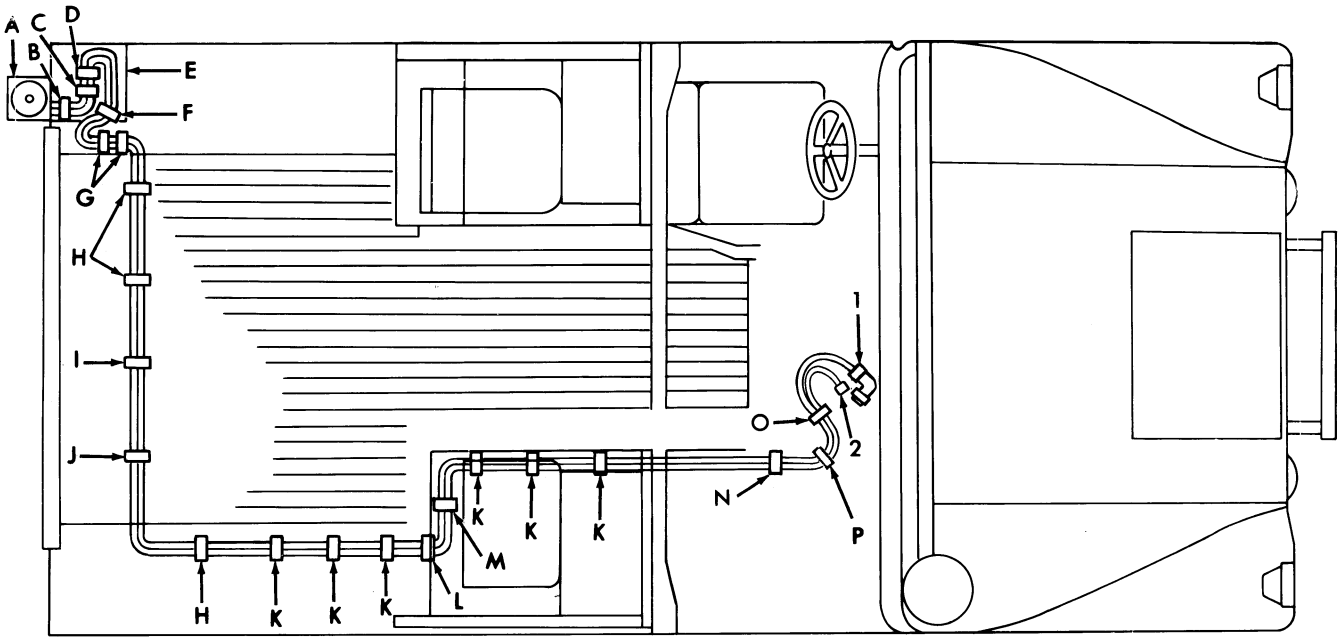

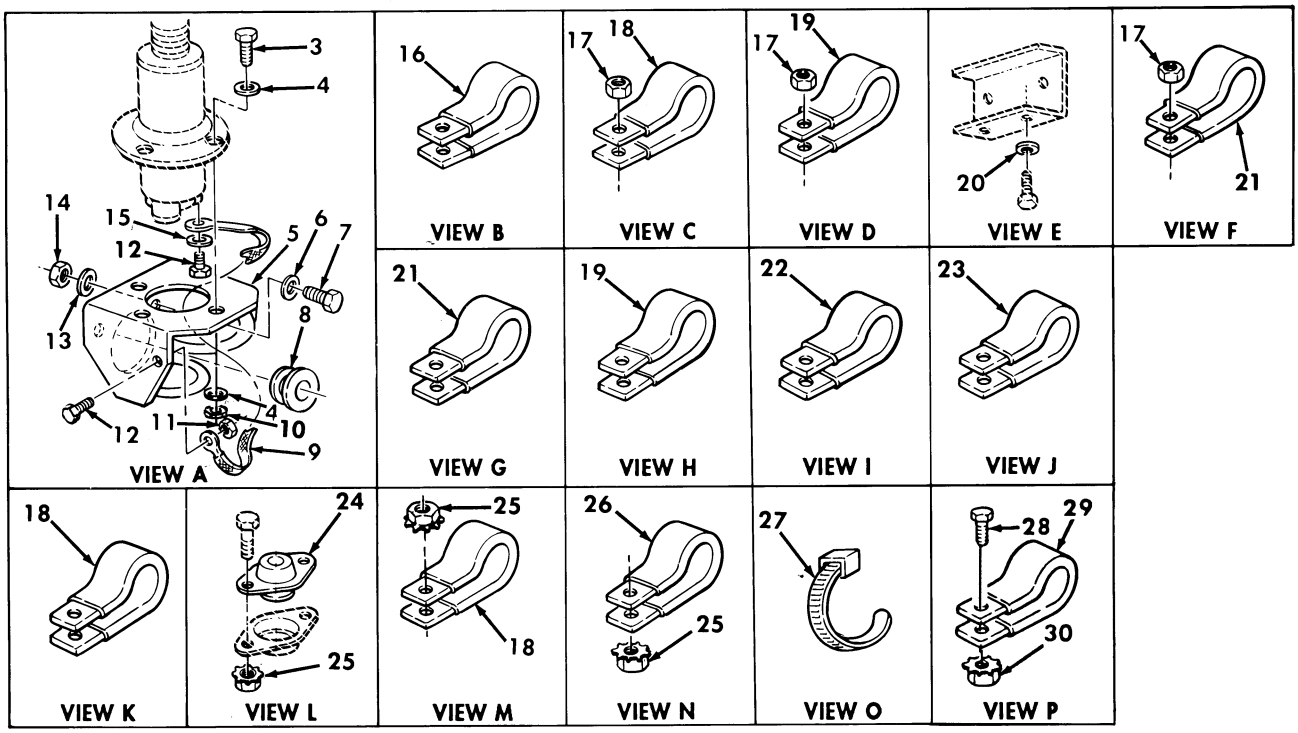

Figure 416. Communications Kit, Radio Cables, AN/VRC-49 and (2) TSEC/KY-57 Assemblies.

(1) ITEM NO	(2) SMR CODE	(3) NSN	(4) CAGEC	(5) PART NUMBER	(6) DESCRIPTION AND USABLE ON CODES(UOC)	(7) QTY
					GROUP 3307 SPECIAL PURPOSE KITS	
					FIG. 416 COMMUNICATIONS KIT,RADIO CABLES,AN/VRC-49 AND (2) TSEC/KY-57 ASSEMBLIES	
1	PAOZZ	5995012516785	19207	12338089-4	CABLE ASSEMBLY,SPEC PART OF KIT P/N PPL-10324..... UOC:AVY,A13,A14,BVY,HVY,H13,H14,NNN	1
2	PAOZZ	5995012519316	19207	12338086-4	CABLE ASSEMBLT,RADI PART OF KIT P/N PPL-10324..... UOC:AVY,A13,A14,BVY,HVY,H13,H14,NNN	1
3	PAOZZ	5305000680502	96906	MS90725-6	SCREW,CAP,HEXAGON H 3/8-16 X 2.00, PART OF KIT P/N PPL-10324..... UOC:AVY,A13,A14,BVY,HVY,H13,H14,NNN	4
4	PAOZZ	5310014124013	19207	2436163	WASHER,FLAT 3/8,PART OF KIT P/N PPL-10324..... UOC:AVY,A13,A14,BVY,HVY,H13,H14,NNN	8
5	PFOZZ	5340011975470	19207	12340364	BRACKET,ANTENNA PART OF KIT P/N PPL-10324..... UOC:AVY,A13,A14,BVY,HVY,H13,H14,NNN	1
6	PAOZZ	5310012520512	34623	5592832	WASHER,FLAT 5/16,PART OF KIT P/N PPL-10324..... UOC:AVY,A13,A14,BVY,HVY,H13,H14,NNN	3
7	PAOZZ	5306002258499	96906	MS90725-34	BOLT,MACHINE 5/16-18 X 1.00,PART OF KIT P/N PPL-10324..... UOC:AVY,A13,A14,BVY,HVY,H13,H14,NNN	3
8	PAOZZ	5325012085424	19207	12338098	GROMMET,NONMETALLIC PART OF KIT P/N PPL-10324..... UOC:AVY,A13,A14,BVY,HVY,H13,H14,NNN	1
9	PAOZZ	6150012078120	19207	12338099-1	LEAD,ELECTRICAL PART OF KIT P/N PPL-10324..... UOC:AVY,A13,A14,BVY,HVY,H13,H14,NNN	1
10	PAOZZ	5310009359021	96906	MS51943-35	NUT,SELF-LOCKING,HE 3/8-16,PART OF KIT P/N PPL-10324..... UOC:AVY,A13,A14,BVY,HVY,H13,H14,NNN	4
11	PAOZZ	5310002514503	24617	9411893	NUT,SELF-LOCKING,HE #10-32,PART OF KIT P/N PPL-10324..... UOC:AVY,A13,A14,BVY,HVY,H13,H14,NNN	1
12	PAOZZ	5305000593659	96906	MS51958-63	SCREW,MACHINE #10-32 X .50,PART OF KIT P/N PPL-10324..... UOC:AVY,A13,A14,BVY,HVY,H13,H14,NNN	2
13	PAOZZ	5310012087576	19207	12338095	WASHER,FLAT 5/16,PART OF KIT P/M PPL-10324..... UOC:AVY,A13,A14,BVY,HVY,H13,H14,NNN	3
14	PAOZZ	5310008140673	96906	MS51943-33	NUT,SELF-LOCKING,HE 5/16-18,PART OF KIT P/N PPL-10323..... UOC:AVY,A13,A14,BVY,HVY,H13,H14,NNN	3
15	PAOZZ	5310000453296	96906	MS35338-43	WASHER,LOCK #10,PART OF KIT P/N PPL-10324..... UOC:AVY,A13,A14,BVY,HVY,H13,H14,NNN	1
16	PAOZZ	5340008546730	96906	MS21333-124	CLAMP,LOOP PART OF KIT P/N PPL-10324 UOC:AVY,A13,A14,BVY,HVY,H13,H14,NNN	1

(1) ITEM NO	(2) SMR CODE	(3) NSN	(4) CAGEC	(5) PART NUMBER	(6) DESCRIPTION AND USABLE ON CODES(UOC)	(7) QTY
17	PFOZZ	5310001249265	72582	271169	NUT,SELF-LOCKING,HE PART OF KIT P/N PPL-10324..... UOC:AVY,A13,A14,BVY,HVY,H13,H14,NNN	3
18	PAOZZ	5340000572906	96906	MS21333-73	CLAMP,LOOP PART OF KIT P/N PPL-10324 UOC:AVY,A13,A14,BVY,HVY,H13,H14,NNN	8
19	PAOZZ	5340009226300	96906	MS21333-77	CLAMP,LOOP PART OF KIT P/N PPL-10324 UOC:AVY,A13,A14,BVY,HVY,H13,H14,NNN	4
20	PAOZZ	5310005825965	96906	MS35338-44	WASHER,LOCK 1/4,PART OF KIT P/N PPL-10324..... UOC:AVY,A13,A14,BVY,HVY,H13,H14,NNN	2
21	PAOZZ	5340007247038	96906	MS21333-76	CLAMP,LOOP PART OF KIT P/N PPL-10324 UOC:AVY,A13,A14,BVY,HVY,H13,H14,NNN	3
22	PFOZZ	5340009588457	96906	MS21333-78	CLAMP,LOOP PART OF KIT P/N PPL-10324 UOC:AVY,A13,A14,BVY,HVY,H13,H14,NNN	1
23	PAOZZ	5340000502740	96906	MS21333-75	CLAMP,LOOP PART OF KIT P/N PPL10324 UOC:AVY,A13,A14,BVY,HVY,H13,H14,NNN	1
24	PAOZZ	5325012555063	19207	12340631	GROMMET,NONMETALLIC PART OF KIT P/N PPL-10324..... UOC:AVY,A13,A14,BVY,HVY,H13,H14,NNN	1
25	PAOZZ	5310011520598	34623	5592818	NUT,SELF-LOCKING,HE 1/4-20,PART OF KIT P/N PPL-10324..... UOC:AVY,A13,A14,BVY,HVY,H13,H14,NNN	4
26	PAOZZ	5340000881254	96906	MS21333-104	CLAMP,LOOP PART OF KIT P/N PPL-10324 UOC:AVY,A13,A14,BVY,HVY,H13,H14,NNN	1
27	PAOZZ	5975012055379	96906	MS3367-7	STRAP,TIEDOWN,ELECT PART OF KIT P/N PPL-10324..... UOC:AVY,A13,A14,BVY,HVY,H13,H14,NNN	1
28	PAOZZ	5305009897434	96906	MS35207-263	SCREW,MACHINE..... UOC:AVY,A13,A14,BVY,HVY,H13,H14,NNN	1
29	PAOZZ	5340000502740	96906	MS21333-75	CLAMP,LOOP..... UOC:AVY,A13,A14,BVY,HVY,H13,H14,NNN	1
30	PAOZZ	5310001249265	24617	271169	NUT,PLAIN,ASSEMBLED..... UOC:AVY,A13,A14,BVY,HVY,H13,H14,NNN	1
KIT	PDOZZ	5820012221106	80036	PPL-10324	TRANSITION KIT,ELEC RADIO RACK ASSEMBLY,AN/VRC-49 RADIO AND TSCE/.. KY-57 ASSEMBLIES..... UOC:AVY,A13,A14,BVY,HVY,H13,H14,NNN	1
					BOLT,MACHINE (10) 415-1	
					BOLT,MACHINE (4) 415-5	
					BOLT,MACHINE (4) 415-6	
					BOLT,MACHINE (3) 416-7	
					BOLT,SELF-LOCKING (2) 415-10	
					BRACKET,ANGLE (1) 415-8	
					BRACKET,ANTENNA (1) 416-5	
					BRACKET,HEAD PHONE (1) 415-17	
					BRACKET,MOUNTING (1) 415-7	
					BRACKET,VEHICULAR C(2) 415-11	
					CABLE ASSEMBLY,RADI(1) 416-2	
					CABLE ASSEMBLY,SPEC(1) 416-1	
					CLAMP,LOOP (1) 416-16	
					CLAMP,LOOP (8) 416-18	
					CLAMP,LOOP (4) 416-19	

(1) ITEM NO	(2) SMR CODE	(3) NSN	(4) CAGEC	(5) PART NUMBER	(6) DESCRIPTION AND USABLE ON CODES(UOC)	(7) QTY
					CLAMP,LOOP (3) 416-21	
					CLAMP,LOOP (1) 416-22	
					CLAMP,LOOP (1) 416-23	
					CLAMP,LOOP (1) 416-26	
					GROMMET,NONMETALLIC(1) 416-8	
					GROMMET,NONMETALLIC(1) 416-24	
					LEAD,ELECTRICAL (1) 416-9	
					NUT,SELF-LOCKING,HE(4) 416-25	
					NUT,SELF-LOCKING,HE(10) 415-4	
					NUT,SELF-LOCKING,HE(4) 415-13	
					NUT,SELF-LOCKING,HE(10) 415-14	
					NUT,SELF-LOCKING,HE(10) 415-15	
					NUT,SELF-LOCKING,HE(4) 416-10	
					NUT,SELF0LOCKING,HE(1) 416-11	
					NUT,SELF-LOCKING,HE(3) 416-14	
					NUT,SELF-LOCKING,HE(4) 416-17	
					RACK ASSEMBLY,RADIO(1) 415-9	
					SCREW,CAP,HEXAGON H(6) 415-3	
					SCREW,CAP,HEXAGON H(4) 416-3	
					SCREW,MACHINE (2) 416-12	
					STRAP,TIEDOWN,ELECT(1) 416-27	
					WASHER,FLAT (40) 415-2	
					WASHER,FLAT (2) 415-12	
					WASHER,FLAT (14) 415-16	
					WASHER,FLAT (8) 416-4	
					WASHER,FLAT (3) 416-6	
					WASHER,FLAT (3) 416-13	
					WASHER,LOCK (1) 416-15	
					WASHER,LOCK (2) 416-20	

END OF FIGURE

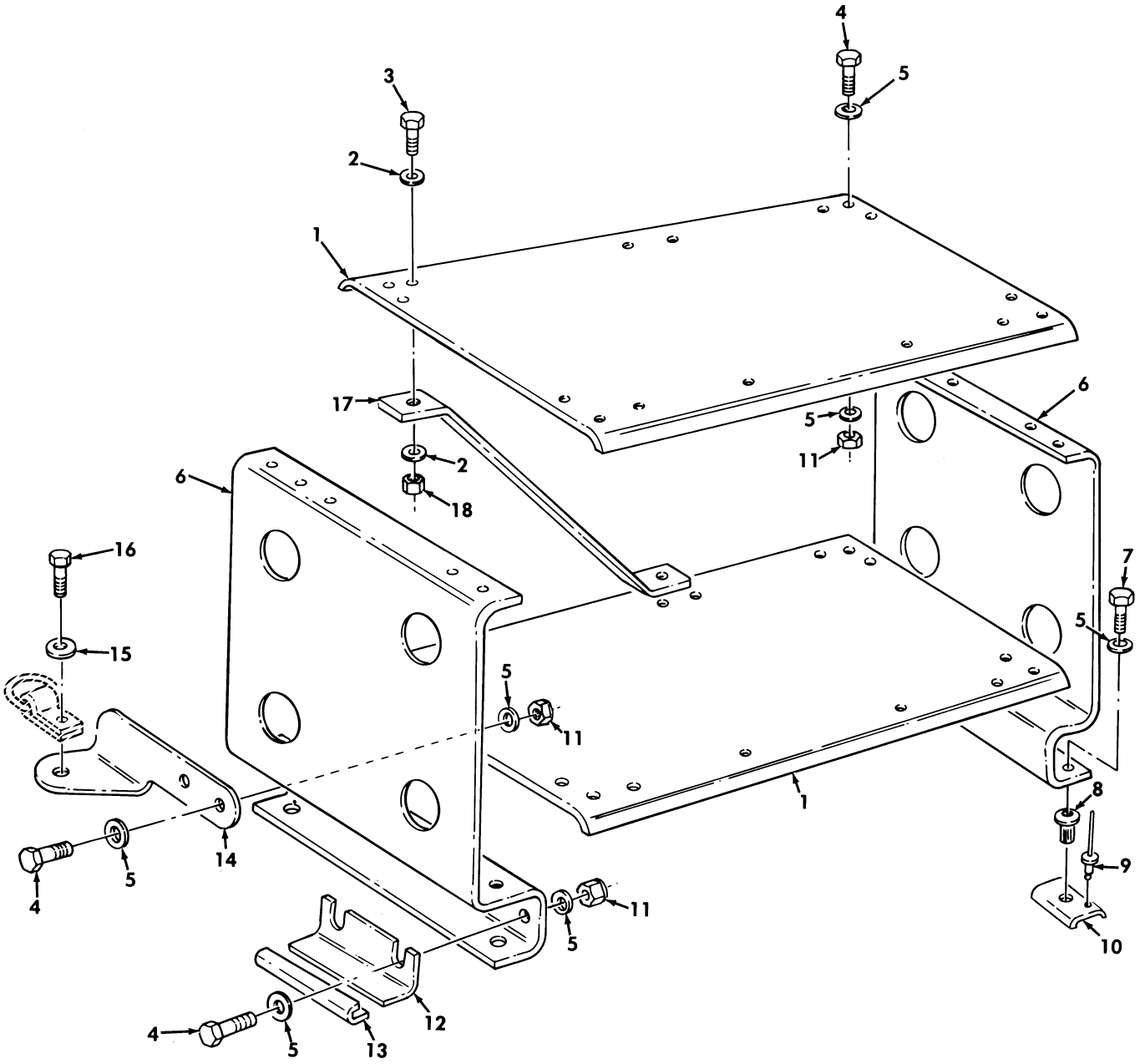

Figure 417. Communications Kit, Radio Rack Assembly.

(1) ITEM NO	(2) SMR CODE	(3) NSN	(4) CAGEC	(5) PART NUMBER	(6) DESCRIPTION AND USABLE ON CODES(UOC)	(7) QTY
					GROUP 3307 SPECIAL PURPOSE KITS	
					FIG. 417 COMMUNICATIONS KIT,RADIO RACK ASSEMBLY	
1	PFOZZ	5975013125469	34623	5596795	SHELF,ELECTRICAL EQ PART OF KIT P/N 5596946..... UOC:A13,A14,H13,H14	2
2	PAOZZ	5310012510748	34623	5593691	WASHER,FLAT 1/4 PART OF KIT P/N 5596946..... UOC:A13,A14,H13,H14	8
3	PAOZZ	5305002253843	80204	B1821BH025C100N	SCREW,CAP,HEXAGON H 1/4-20 X 1.00 PART OF KIT P/N 5596946..... UOC:A13,A14,H13,H14	4
4	PAOZZ	5306002264828	80204	B1821BH031C113N	BOLT,MACHINE 5/16-18 X 1.125 PART OF KIT P/N 5596946..... UOC:A13,A14,H13,H14	14
5	PAOZZ	5310012520512	34623	5592832	WASHER,FLAT 5/16 PART OF KIT P/N 5596946..... UOC:A13,A14,H13,H14	32
6	PAOZZ	5340012902279	34623	5596794	BRACKET,MOUNTING PART OF KIT P/N 5596946..... UOC:A13,A14,H13,H14	2
7	PAOZZ	5306002264829	80204	B1821BH031C125N	BOLT,MACHINE 5/16-18 X 1.25 PART OF KIT P/N 5596946..... UOC:A13,A14,H13,H14	4
8	PAOZZ	5310011981724	03481	S31P280	NUT,PLAIN,BLIND RIV 5/16-18 PART OF KIT P/N 5596946..... UOC:A13,A14,H13,H14	4
9	PAOZZ	5320012544251	34623	5593050	RIVET,BLIND PART OF KIT P/N 5596946. UOC:A13,A14,H13,H14	8
10	PAOZZ	5340012915711	34623	5588193	BRACKET,DOUBLE ANGL PART OF KIT P/N 5596946..... UOC:A13,A14,H13,H14	4
11	PAOZZ	5310008140673	96906	MS51943-33	NUT,SELF-LOCKING,HE 5/16-18 PART OF KIT P/N 5596946..... UOC:A13,A14,H13,H14	14
12	PAOZZ	5340012914537	34623	5597356	BRACKET,ANGLE PART OF KIT P/N 5596946..... UOC:A13,A14,H13,H14	1
13	PAOZZ	2590012911033	34623	5595551	PROTECTOR,EDGE PART OF KIT P/N 5596946..... UOC:A13,A14,H13,H14	1
14	PAOZZ	5340012989691	34623	5597372	BRACKET,ANGLE R.H. PART OF KIT P/N 5596946..... UOC:A13,A14,H13,H14	1
14	PAOZZ	5340012906342	34623	5597350	BRACKET,ANGLE L.H. PART OF KIT P/N 5596946..... UOC:A13,A14,H13,H14	1
15	PAOZZ	5310012538948	34623	5593320	WASHER,FLAT .50 PART OF KIT P/N 5596946..... UOC:A13,A14,H13,H14	2
16	PAOZZ	5305000712069	52304	113324	SCREW,CAP,HEXAGON H 1/2-13 X 1.50	2

(1) ITEM NO	(2) SMR CODE	(3) NSN	(4) CAGEC	(5) PART NUMBER	(6) DESCRIPTION AND USABLE ON CODES(UOC)	(7) QTY
					PART OF KIT P/N 5596946..... UOC:A13,A14,H13,H14	
17	PAOZZ	5340012908390	34623	5597086	BRACKET,MOUNTING PART OF KIT P/N 5596946..... UOC:A13,A14,H13,H14	2
18	PAOZZ	5310000614650	96906	MS51943-31	NUT,SELF-LOCKING,HE 1/4-20 PART OF KIT P/N 5596946..... UOC:A13,A14,H13,H14	4

END OF FIGURE

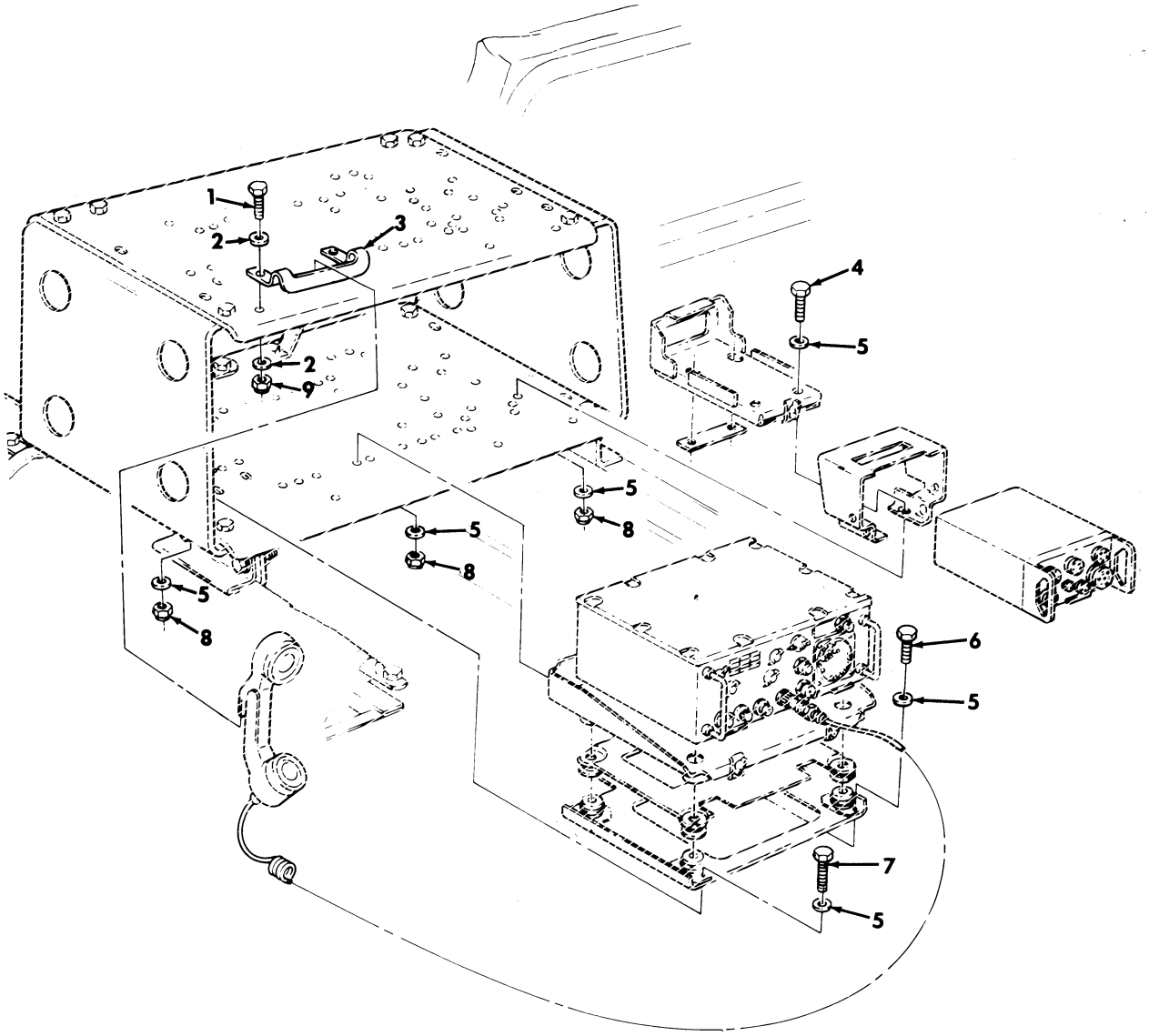

Figure 418. Communications Kit, Radio Rack Assembly Mounting Hardware, AN/VRC-46.

(1) ITEM NO	(2) SMR CODE	(3) NSN	(4) CAGEC	(5) PART NUMBER	(6) DESCRIPTION AND USABLE ON CODES(UOC)	(7) QTY
					GROUP 3307 SPECIAL PURPOSE KITS	
					FIG. 418 COMMUNICATIONS KIT,RADIO RACK ASSEMBLY MOUNTING HARDWARE, AN/VRC-46	
1	PAOZZ	5305000712505	80204	MS90728-7	SCREW,CAP,HEXAGON H 1/4-20 X 7/8 PART OF KIT P/N 5596946..... UOC:A13,A14,H13,H14	2
2	PAOZZ	5310012510748	34623	5593691	WASHER,FLAT 1/4 PART OF KIT P/N 5596946..... UOC:A13,A14,H13,H14	4
3	PAOZZ	5340012918915	34623	5597357	BRACKET,MOUNTING PART OF KIT P/N 5596946..... UOC:A13,A14,H13,H14	1
4	PAOZZ	5306002258498	96906	MS90725-33	BOLT,MACHINE 5/16-18 X 7/8 PART OF KIT P/N 5596946..... UOC:A13,A14,H13,H14	4
5	PAOZZ	5310012520512	34623	5592832	WASHER,FLAT 5/16 PART OF KIT P/N 5596946..... UOC:A13,A14,H13,H14	18
6	PAOZZ	5306002258499	96906	MS90725-34	BOLT,MACHINE 5/16-18 X 1.00 PART OF KIT P/N 5596946..... UOC:A13,A14,H13,H14	3
7	PAOZZ	5306002264828	80204	B1821BH031C113N	BOLT,MACHINE 5/16-18 X 1.125 PART OF KIT P/N 5596946..... UOC:A13,A14,H13,H14	2
8	PAOZZ	5310008140673	96906	MS51943-33	NUT,SELF-LOCKING,HE 5/16-18 PART OF KIT P/N 5596946..... UOC:A13,A14,H13,H14	9
9	PAOZZ	5310000614650	96906	MS51943-31	NUT,SELF-LOCKING,HE 1/4-20 PART OF KIT P/N 5596946..... UOC:A13,A14,H13,H14	2

END OF FIGURE

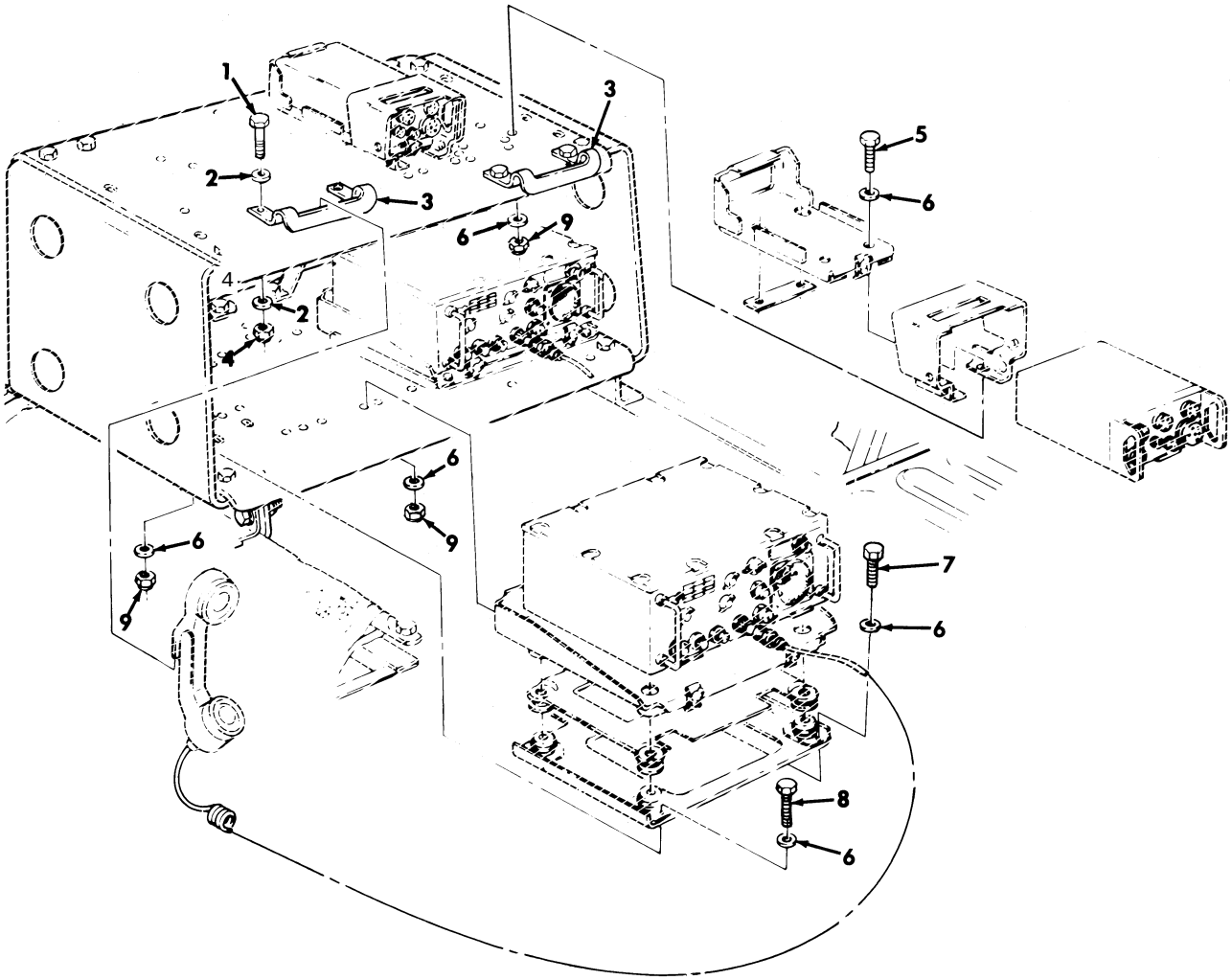

Figure 419. Communications Kit, Radio Rack Assembly Mounting Hardware, (2) AN/VRC-46.

(1) ITEM NO	(2) SMR CODE	(3) NSN	(4) CAGEC	(5) PART NUMBER	(6) DESCRIPTION AND USABLE ON CODES(UOC)	(7) QTY
					GROUP 3307 SPECIAL PURPOSE KITS	
					FIG. 419 COMMUNICATIONS KIT,RADIO RACK ASSEMBLY MOUNTING HARDWARE, (2) AN/VRC-46	
1	PAOZZ	5305000712505	80204	B1821BH025CO88N	SCREW,CAP,HEXAGON H 1/4-20 X 7/8 PART OF KIT P/N 5596946..... UOC:A13,A14,H13,H14	4
2	PAOZZ	5310012510748	34623	5593691	WASHER,FLAT 1/4 PART OF KIT P/N 5596946..... UOC:A13,A14,H13,H14	8
3	PAOZZ	5340012918915	34623	5597357	BRACKET,MOUNTING PART OF KIT P/N 5596946..... UOC:A13,A14,H13,H14	2
4	PAOZZ	5310000614650	96906	MS51943-31	NUT,SELF-LOCKING,HE 1/4-20 PART OF KIT P/N 5596946..... UOC:A13,A14,H13,H14	4
5	PAOZZ	5306002258498	96906	MS90725-33	BOLT,MACHINE 5/16-18 X 7/8 PART OF KIT P/N 5596946..... UOC:A13,A14,H13,H14	8
6	PAOZZ	5310012520512	34623	5592832	WASHER,FLAT 5/16 PART OF KIT P/N 5596946..... UOC:A13,A14,H13,H14	36
7	PAOZZ	5306002258499	96906	MS90725-34	BOLT,MACHINE 5/16-18 X 1.00 PART OF KIT P/N 5596946..... UOC:A13,A14,H13,H14	6
8	PAOZZ	5306002264828	80204	B1821BH031C113N	BOLT,MACHINE 5/16-18 X 1.125 PART OF KIT P/N 5596946..... UOC:A13,A14,H13,H14	4
9	PAOZZ	5310008140673	96906	MS51943-33	NUT,SELF-LOCKING,HE 5/16-18 PART OF KIT P/N 5596946..... UOC:A13,A14,H13,H14	18

END OF FIGURE

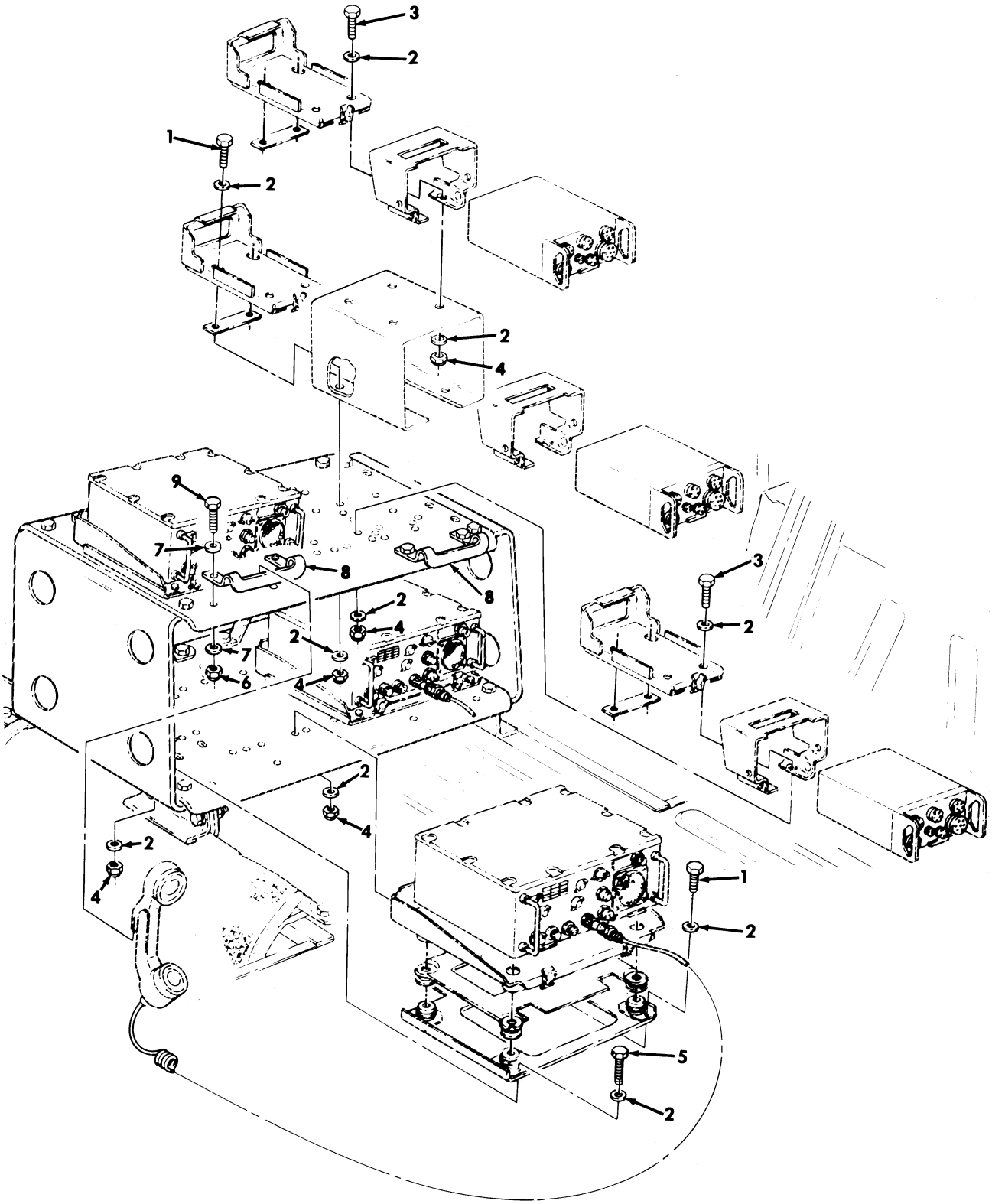

Figure 420. Communications Kit, Radio Rack Assembly Mounting Hardware, (3) AN/VRC-46.

(1) ITEM NO	(2) SMR CODE	(3) NSN	(4) CAGEC	(5) PART NUMBER	(6) DESCRIPTION AND USABLE ON CODES(UOC)	(7) QTY
					GROUP 3307 SPECIAL PURPOSE KITS	
					FIG. 420 COMMUNICATIONS KIT,RADIO RACK ASSEMBLY MOUNTING HARDWARE, (3) AN/VRC-46	
1	PAOZZ	5306002258499	96906	MS90725-34	BOLT,MACHINE 5/16-18 X 1.00 PART OF KIT P/N 5596946..... UOC:A13,A14,H13,H14	13
2	PAOZZ	5310012520512	34623	5592832	WASHER,FLAT 5/16 PART OF KIT P/N 5596946..... UOC:A13,A14,H13,H14	54
3	PAOZZ	5306002258498	96906	MS90725-33	BOLT,MACHINE 5/16-18 X .88 PART OF KIT P/N 5596946..... UOC:A13,A14,H13,H14	8
4	PAOZZ	5310008140673	96906	MS51943-33	NUT,SELF-LOCKING,HE 5/16-18 PART OF KIT P/N 5596946..... UOC:A13,A14,H13,H14	27
5	PAOZZ	5306002264828	80204	B1821BH031C113N	BOLT,MACHINE 5/16-18 X 1.125 PART OF KIT P/N 5596946..... UOC:A13,A14,H13,H14	6
6	PAOZZ	5310000614650	96906	MS51943-31	NUT,SELF-LOCKING,HE 1/4-20 PART OF KIT P/N 5596946..... UOC:A13,A14,H13,H14	4
7	PAOZZ	5310012510748	34623	5593691	WASHER,FLAT 1/4 PART OF KIT P/N 5596946..... UOC:A13,A14,H13,H14	8
8	PAOZZ	5340012918915	34623	5597357	BRACKET,MOUNTING PART OF KIT P/N 5596946..... UOC:A13,A14,H13,H14	2
9	PAOZZ	5305000712505	80204	MS90728-7	SCREW,CAP,HEXAGON H 1/4-20 X .88 PART OF KIT P/N 5596946..... UOC:A13,A14,H13,H14	4

END OF FIGURE

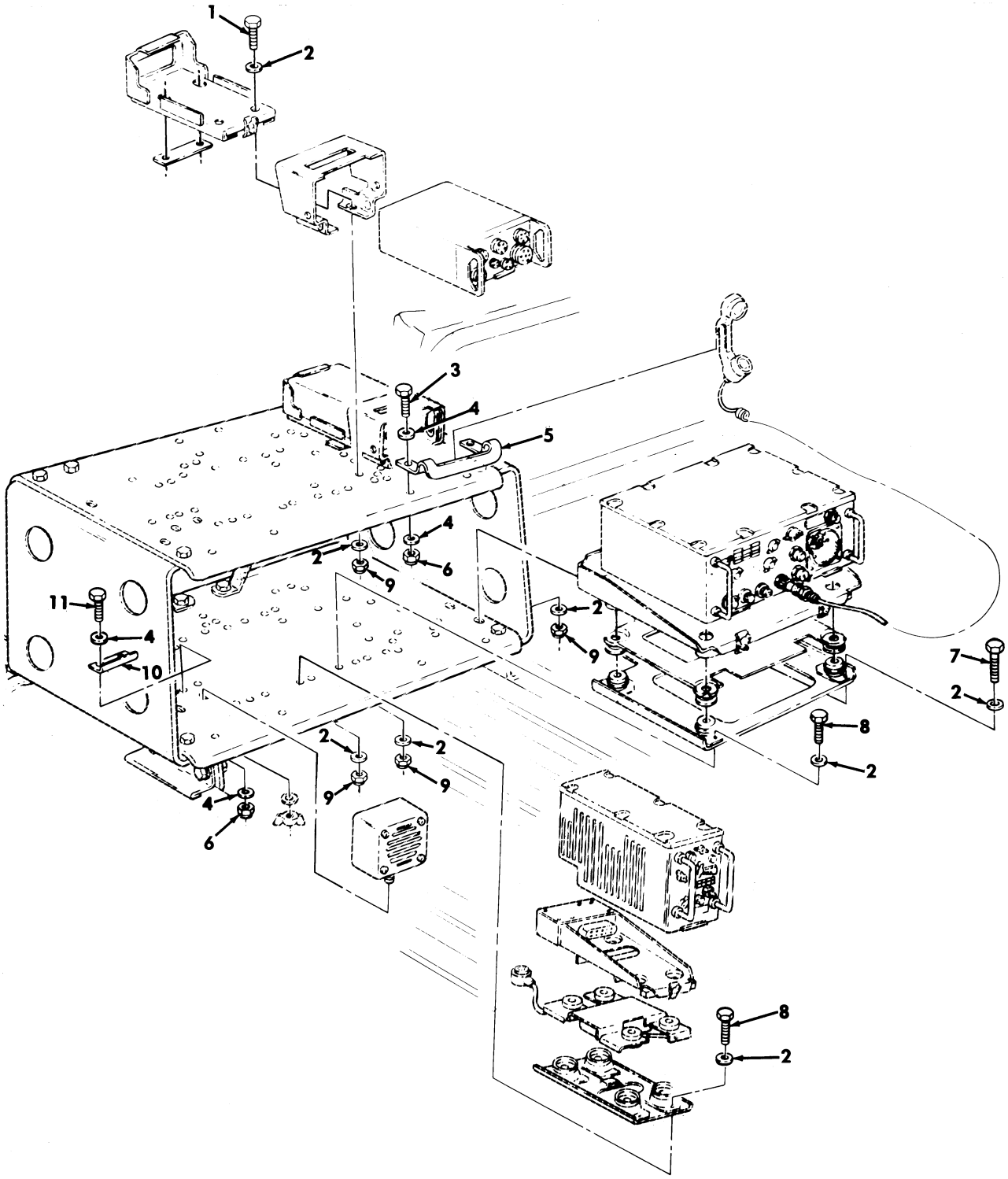

Figure 421. Communications Kit, Radio Rack Assembly Mounting Hardware, AN/VRC-47.

(1) ITEM NO	(2) SMR CODE	(3) NSN	(4) CAGEC	(5) PART NUMBER	(6) DESCRIPTION AND USABLE ON CODES(UOC)	(7) QTY
					GROUP 3307 SPECIAL PURPOSE KITS	
					FIG. 421 COMMUNICATIONS KIT,RADIO RACK ASSEMBLY MOUNTING HARDWARE, AN/VRC-47	
1	PAOZZ	5306002258498	96906	MS90725-33	BOLT,MACHINE 5/16-18 X .88 PART OF KIT P/N 5596946..... UOC:A13,A14,H13,H14	8
2	PAOZZ	5310012520512	34623	5592832	WASHER,FLAT 5/16 PART OF KIT P/N 5596946..... UOC:A13,A14,H13,H14	34
3	PAOZZ	5305000712505	80204	MS90728-7	SCREW,CAP,HEXAGON H 1/4-20 X .88 PART OF KIT P/N 5596946..... UOC:A13,A14,H13,H14	2
4	PAOZZ	5310012510748	34623	5593691	WASHER,FLAT 1/4 PART OF KIT P/N 5596946..... UOC:A13,A14,H13,H14	8
5	PAOZZ	5340012918915	34623	5597357	BRACKET,MOUNTING PART OF KIT P/N 5596946..... UOC:A13,A14,H13,H14	1
6	PAOZZ	5310000614650	96906	MS51943-31	NUT,SELF-LOCKING,HE 1/4-20 PART OF KIT P/N 5596946..... UOC:A13,A14,H13,H14	4
7	PAOZZ	5306002264828	80204	B1821BH031C113N	BOLT,MACHINE 5/16-18 X 1.125 PART OF KIT P/N 5596946..... UOC:A13,A14,H13,H14	2
8	PAOZZ	5306002258499	96906	MS90725-34	BOLT,MACHINE 5/16-18 X 1.00 PART OF KIT P/N 5596946..... UOC:A13,A14,H13,H14	7
9	PAOZZ	5310004722963	96906	MS51943-3	NUT,SELF-LOCKING,HE 5/16-18 PART OF KIT P/N 5596946..... UOC:A13,A14,H13,H14	17
10	PAOZZ	5340012551109	19207	12340635	BRACKET,ANGLE PART OF KIT P/N 5596946..... UOC:A13,A14,H13,H14	1
11	PAOZZ	5305000680502	96906	MS90725-6	SCREW,CAP,HEXAGON H 1/4-20 X .75 PART OF KIT P/N 5596946..... UOC:A13,A14,H13,H14	2

END OF FIGURE

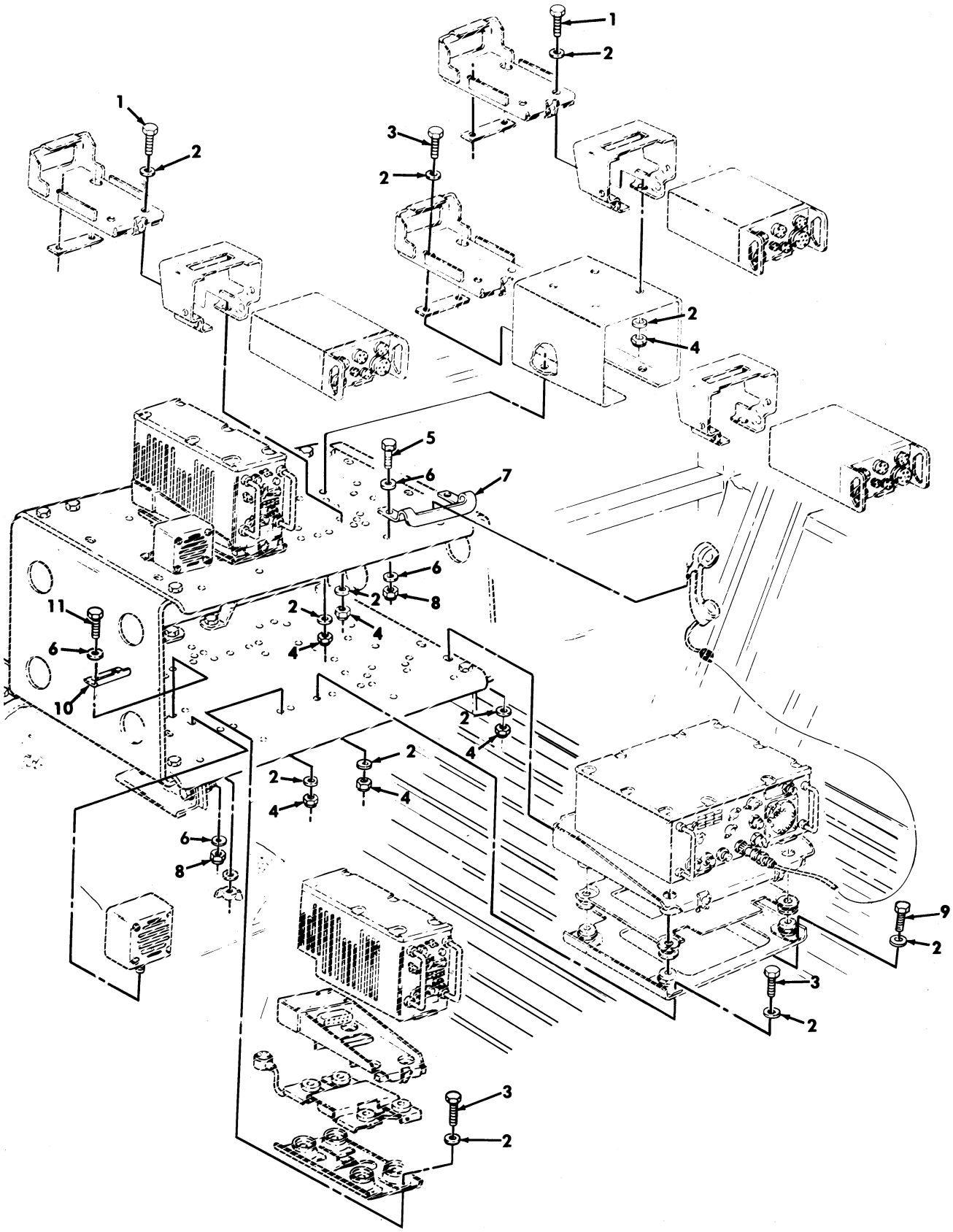

Figure 422. Communications Kit, Radio Rack Assembly Mounting Hardware, AN/VRC-48.

(1) ITEM NO	(2) SMR CODE	(3) NSN	(4) CAGEC	(5) PART NUMBER	(6) DESCRIPTION AND USABLE ON CODES(UOC)	(7) QTY
					GROUP 3307 SPECIAL PURPOSE KITS	
					FIG. 422 COMMUNICATIONS KIT,RADIO RACK ASSEMBLY MOUNTING HARDWARE, AN/VRC-48	
1	PAOZZ	5306002258498	96906	MS90725-33	BOLT,MACHINE 5/16-18 X .88 PART OF KIT P/N 5596946..... UOC:A13,A14,H13,H14	8
2	PAOZZ	5310012520512	34623	5592832	WASHER,FLAT 5/16 PART OF KIT P/N 5596946..... UOC:A13,A14,H13,H14	50
3	PAOZZ	5306002258499	96906	MS90725-34	BOLT,MACHINE 5/16-18 X 1.00 PART OF KIT P/N 5596946..... UOC:A13,A14,H13,H14	15
4	PAOZZ	5310004722963	96906	MS51943-3	NUT,SELF-LOCKING,HE 5/16-18 PART OF KIT P/N 5596946..... UOC:A13,A14,H13,H14	25
5	PAOZZ	5305000712505	80204	MS90728-7	SCREW,CAP,HEXAGON H 1/4-20 X .88 PART OF KIT P/N 5596946..... UOC:A13,A14,H13,H14	2
6	PAOZZ	5310012510748	34623	5593691	WASHER,FLAT 1/4 PART OF KIT P/N 5596946..... UOC:A13,A14,H13,H14	12
7	PAOZZ	5340012918915	34623	5597357	BRACKET,MOUNTING PART OF KIT P/N 5596946..... UOC:A13,A14,H13,H14	1
8	PAOZZ	5310000614650	96906	MS51943-31	NUT,SELF-LOCKING,HE 1/4-20 PART OF KIT P/N 5596946..... UOC:A13,A14,H13,H14	6
9	PAOZZ	5306002264828	80204	B1821BH031C113N	BOLT,MACHINE 5/16-18 X 1.125 PART OF KIT P/N 5596946..... UOC:A13,A14,H13,H14	2
10	PAOZZ	5340012551109	19207	12340635	BRACKET,ANGLE PART OF KIT P/N 5596946..... UOC:A13,A14,H13,H14	2
11	PAOZZ	5305000680502	96906	MS90725-6	SCREW,CAP,HEXAGON H 1/4-20 X .75 PART OF KIT P/N 5596946..... UOC:A13,A14,H13,H14	4

END OF FIGURE

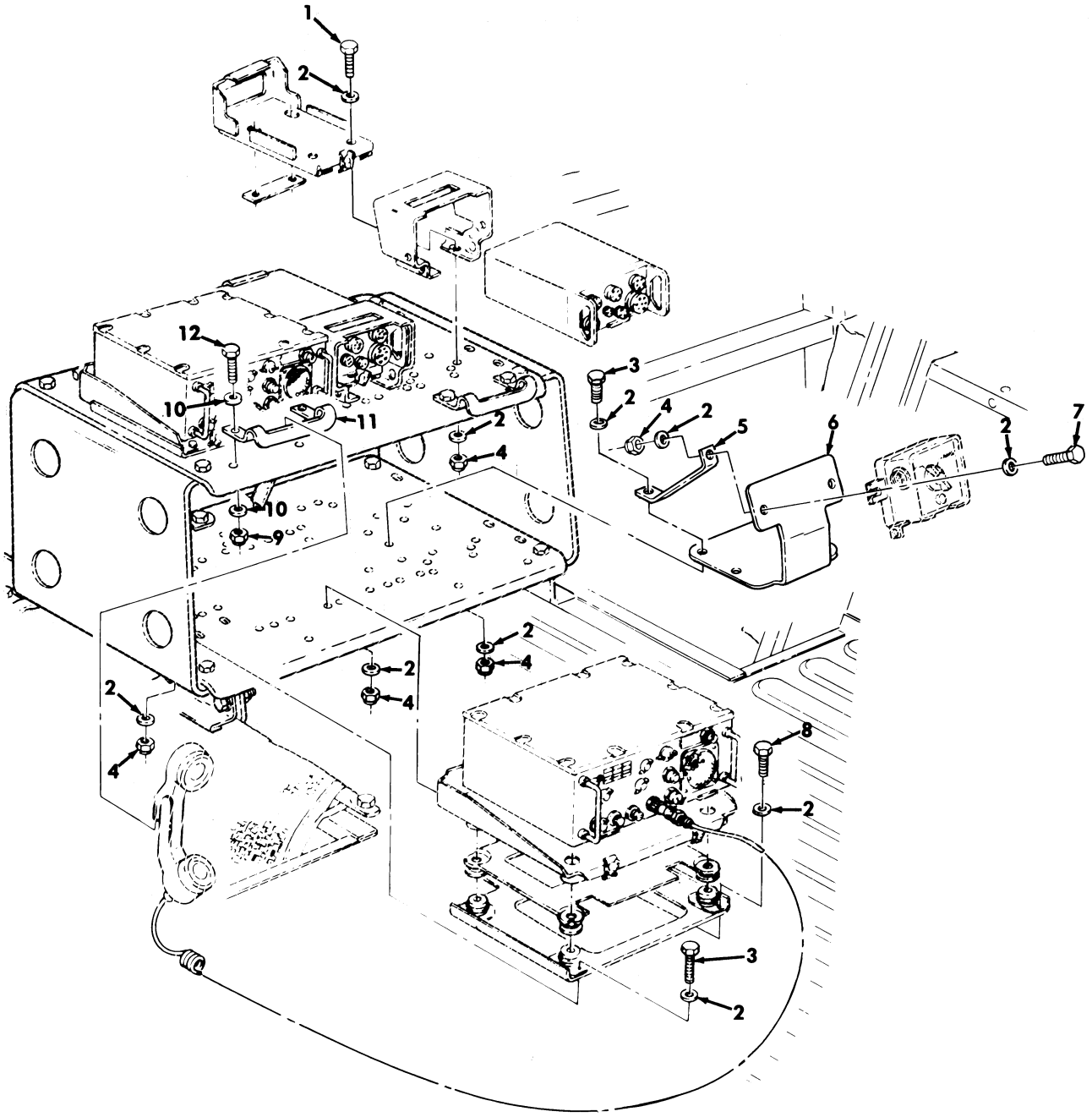

Figure 423. Communications Kit, Radio Rack Assembly Mounting Hardware, AN/VRC-49.

(1) ITEM NO	(2) SMR CODE	(3) NSN	(4) CAGEC	(5) PART NUMBER	(6) DESCRIPTION AND USABLE ON CODES(UOC)	(7) QTY
					GROUP 3307 SPECIAL PURPOSE KITS	
					FIG. 423 COMMUNICATIONS KIT,RADIO RACK ASSEMBLY MOUNTING HARDWARE, AN/VRC-49	
1	PAOZZ	5306002258498	96906	MS90725-33	BOLT,MACHINE 5/16-18 X .88 PART OF KIT P/N 5596946..... UOC:A13,A14,H13,H14	8
2	PAOZZ	5310012520512	34623	5592832	WASHER,FLAT 5/16 PART OF KIT P/N 5596946..... UOC:A13,A14,H13,H14	48
3	PAOZZ	5306002264828	80204	B1821BH031C113N	BOLT,MACHINE 5/16-18 X 1.125 PART OF KIT P/N 5596946..... UOC:A13,A14,H13,H14	8
4	PAOZZ	5310008140673	96906	MS51943-33	NUT,SELF-LOCKING,HE 5/16-18 PART OF KIT P/N 5596946..... UOC:A13,A14,H13,H14	24
5	PAOZZ	2510012905675	34623	5597595	BRACE,RACK PART OF KIT P/N 5596946.. UOC:A13,A14,H13,H14	2
6	PAOZZ	5340012908473	34623	5596797	BRACKET,DOUBLE ANGL PART OF KIT P/N 5596946..... UOC:A13,A14,H13,H14	1
7	PAOZZ	5306002264829	80204	B1821BH031C125N	BOLT,MACHINE 5/16-18 X 1.25 PART OF KIT P/N 5596946..... UOC:A13,A14,H13,H14	2
8	PAOZZ	5306002258499	96906	MS90725-34	BOLT,MACHINE 5/16-18 X 1.00 PART OF KIT P/N 5596946..... UOC:A13,A14,H13,H14	6
9	PAOZZ	5310000614650	96906	MS51943-31	NUT,SELF-LOCKING,HE 1/4-20 PART OF KIT P/N 5596946..... UOC:A13,A14,H13,H14	4
10	PAOZZ	5310012510748	34623	5593691	WASHER,FLAT 1/4 PART OF KIT P/N 5596946..... UOC:A13,A14,H13,H14	8
11	PAOZZ	5340012918915	34623	5597357	BRACKET,MOUNTING PART OF KIT P/N 5596946..... UOC:A13,A14,H13,H14	2
12	PAOZZ	5305000712505	80204	MS90728-7	SCREW,CAP,HEXAGON H 1/4-20 X .88 PART OF KIT P/N 5596946..... UOC:A13,A14,H13,H14	4

END OF FIGURE

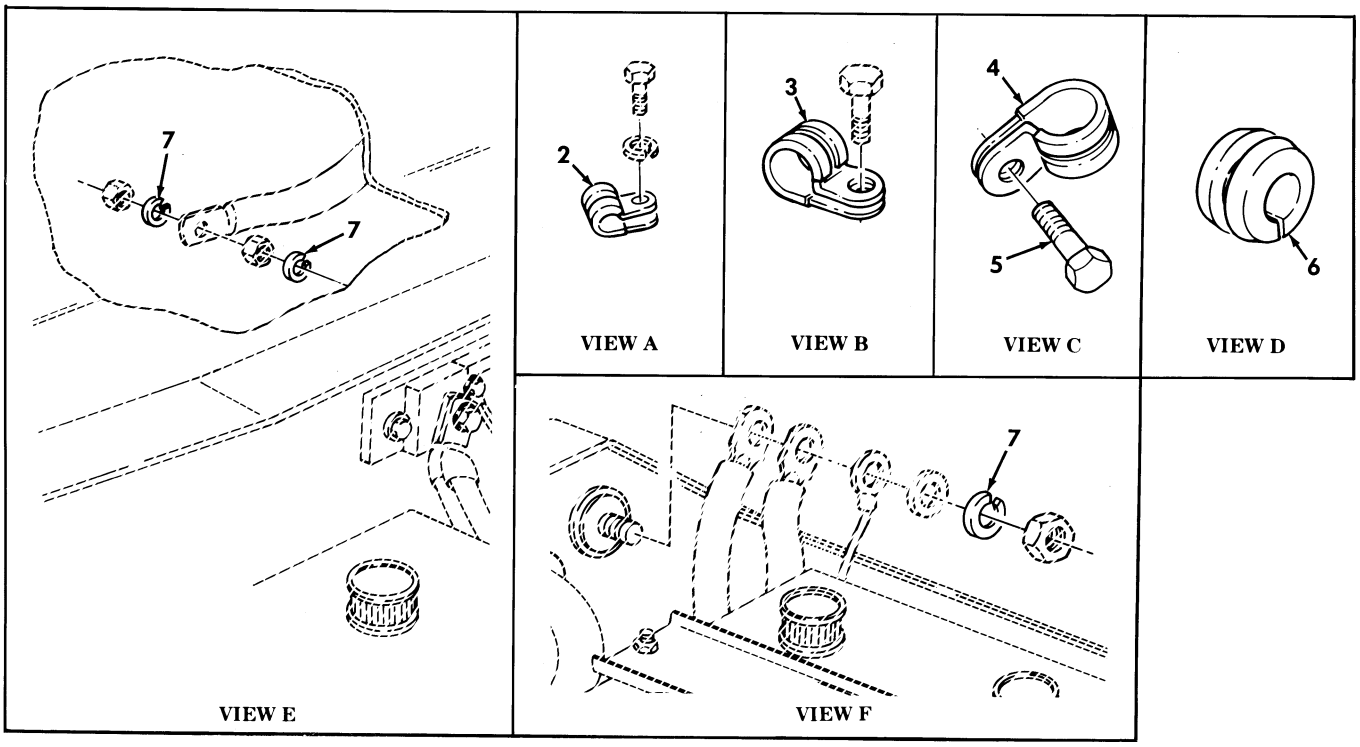

Figure 424. Communications Kit, Radio Cable, Main Power.

(1) ITEM NO	(2) SMR CODE	(3) NSN	(4) CAGEC	(5) PART NUMBER	(6) DESCRIPTION AND USABLE ON CODES(UOC)	(7) QTY
					GROUP 3307 SPECIAL PURPOSE KITS	
					FIG. 424 COMMUNICATIONS KIT,RADIO CABLE,MAIN POWER	
1	PAOZZ	6150012894761	34623	5597136-C	CABLE ASSEMBLY,POWE PART OF KIT P/N 5596946..... UOC:A13,A14,H13,H14	1
2	PAOZZ	5340000573043	96906	MS21333-112	CLAMP,LOOP PART OF KIT P/N 5596946.. UOC:A13,A14,H13,H14	2
3	PAOZZ	5340000502740	96906	MS21333-75	CLAMP,LOOP PART OF KIT P/N 5596946.. UOC:A13,A14,H13,H14	1
4	PAOZZ	5340000913790	96906	MS21333-72	CLAMP,LOOP PART OF KIT P/N 5596946.. UOC:A13,A14,H13,H14	1
5	PAOZZ	5305012596322	34623	12342499-1	SCREW,MACHINE #10-32 X 3/4 PART OF KIT P/N 5596946..... UOC:A13,A14,H13,H14	1
6	PAOZZ	5325002858363	96906	MS35489-45	GROMMET,NONMETALLIC PART OF KIT P/N 5596946..... UOC:A13,A14,H13,H14	1
7	PAOZZ	5310005845272	96906	MS35338-48	WASHER,LOCK 1/2 PART OF KIT P/N 5596946..... UOC:A13,A14,H13,H14	3

END OF FIGURE

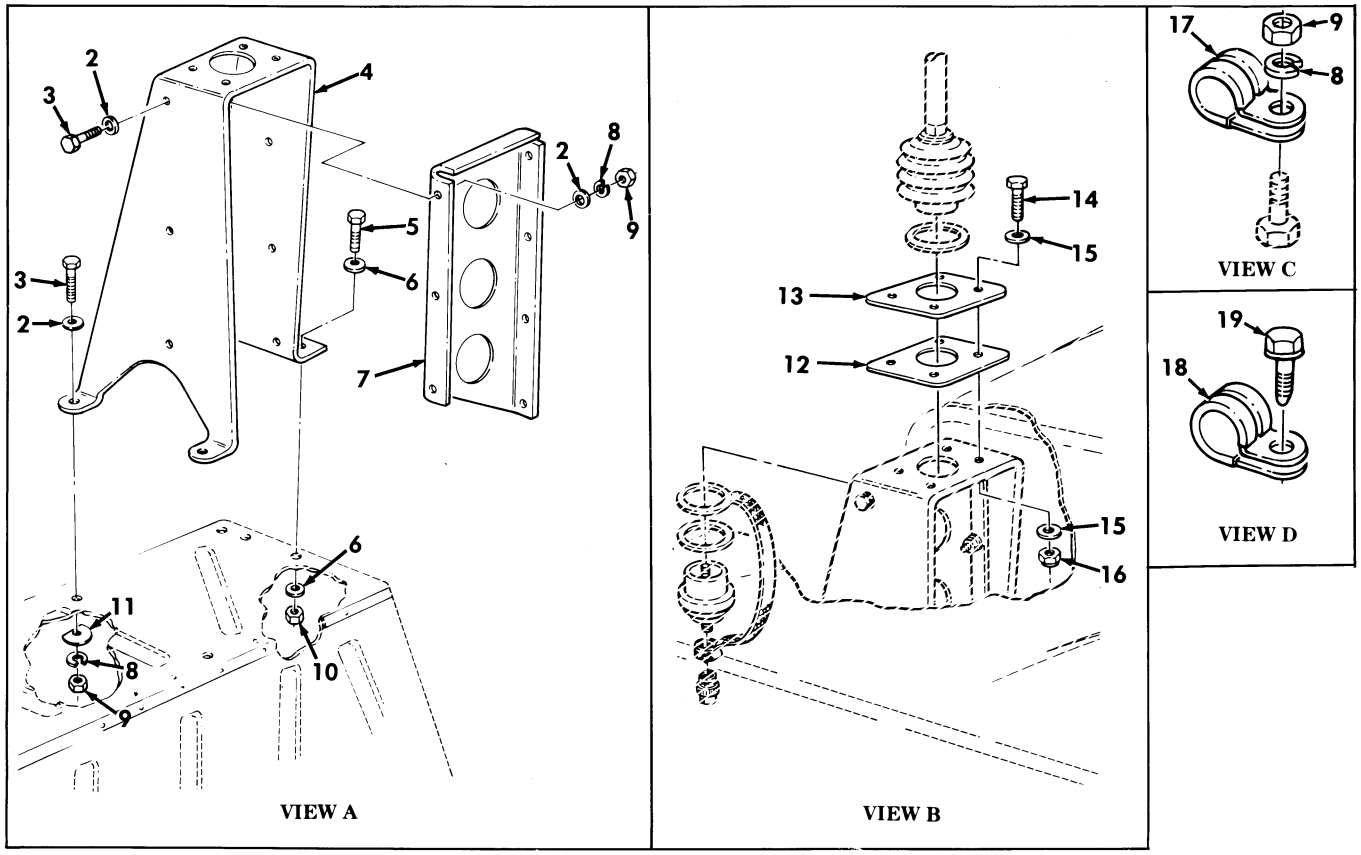

Figure 425. Communications Kit, Radio Cables, AN/VRC-47 and AN/VRC-48.

(1) ITEM NO	(2) SMR CODE	(3) NSN	(4) CAGEC	(5) PART NUMBER	(6) DESCRIPTION AND USABLE ON CODES(UOC)	(7) QTY
					GROUP 3307 SPECIAL PURPOSE KITS	
					FIG. 425 COMMUNICATIONS KIT,RADIO CABLES,AN/VRC-47 AND AN/VRC-48	
1	PAOZZ	5995012916377	34623	5597138	CABLE ASSEMBLY,SPEC PART OF KIT P/N 5596946..... UOC:A13,A14,H13,H14	1
2	PAOZZ	5310012510748	34623	5593691	WASHER,FLAT 1/4 PART OF KIT P/N 5596946..... UOC:A13,A14,H13,H14	16
3	PAOZZ	5305000680509	80204	B1821BH025C125N	SCREW,CAP,HEXAGON H 1/4-20 X 1.25 PART OF KIT P/N 5596946..... UOC:A13,A14,H13,H14	9
4	PAOZZ	5340012904887	34623	5596843	BRACKET,MOUNTING PART OF KIT P/N 5596946..... UOC:A13,A14,H13,H14	1
5	PAOZZ	5305000711788	80204	B1821BH044C125N	SCREW,CAP,HEXAGON H 7/16-14 X 1.25 PART OF KIT P/N 5596946..... UOC:A13,A14,H13,H14	2
6	PAOZZ	5310013034701	96906	MS51412-1	WASHER,FLAT 15/32 PART OF KIT P/N 5596946..... UOC:A13,A14,H13,H14	4
7	PAOZZ	5340012915186	34623	5597150	BRACKET,MOUNTING PART OF KIT P/N 5596946..... UOC:A13,A14,H13,H14	1
8	PAOZZ	5310005825965	96906	MS35338-44	WASHER,LOCK 1/4 PART OF KIT P/N 5596946..... UOC:A13,A14,H13,H14	12
9	PAOZZ	5310009050762	96906	MS51967-3	NUT,PLAIN,HEXAGON 1/4-20 PART OF KIT P/N 5596946..... UOC:A13,A14,H13,H14	12
10	PAOZZ	5310008960903	96906	MS51967-12	NUT,PLAIN,HEXAGON 7/16-14 PART OF KIT P/N 5596946..... UOC:A13,A14,H13,H14	2
11	PAOZZ	5310012087576	19207	12338095	WASHER,FLAT 1/4 PART OF KIT P/N 5596946..... UOC:A13,A14,H13,H14	2
12	PAOZZ	5330012899231	34623	5597371	GASKET PART OF KIT P/N 5596946..... UOC:A13,A14,H13,H14	1
13	PAOZZ	5985012533514	19207	12340637	ADAPTER,ANTENNA TO PART OF KIT P/N 5596946..... UOC:A13,A14,H13,H14	1
14	PAOZZ	5305005432419	80204	B1821BH038C113N	SCREW,CAP,HEXAGON H 3/8-16 X 1.125 PART OF KIT P/N 5596946..... UOC:A13,A14,H13,H14	4
15	PAOZZ	5310014124013	24617	2436163	WASHER,FLAT 3/8 PART OF KIT P/N 5596946..... UOC:A13,A14,H13,H14	8
16	PAOZZ	5310009359021	96906	MS51943-35	NUT,SELF-LOCKING,HE 3/8-16 PART OF KIT P/N 5596946..... UOC:A13,A14,H13,H14	4
17	PAOZZ	5340008546729	96906	MS21333-103	CLAMP,LOOP PART OF KIT P/N 5596946..	3

(1) ITEM NO	(2) SMR CODE	(3) NSN	(4) CAGEC	(5) PART NUMBER	(6) DESCRIPTION AND USABLE ON CODES(UOC)	(7) QTY
					UOC:A13,A14,H13,H14	
18	PAOZZ	5340000797837	96906	MS21333-67	CLAMP,LOOP PART OF KIT P/N 5596946..	3
					UOC:A13,A14,H13,H14	
19	PAOZZ	5305012596322	34623	5593913	SCREW,MACHINE #10-32 X 3/4 PART OF	3
					KIT P/N 5596946.....	
					UOC:A13,A14,H13,H14	

END OF FIGURE

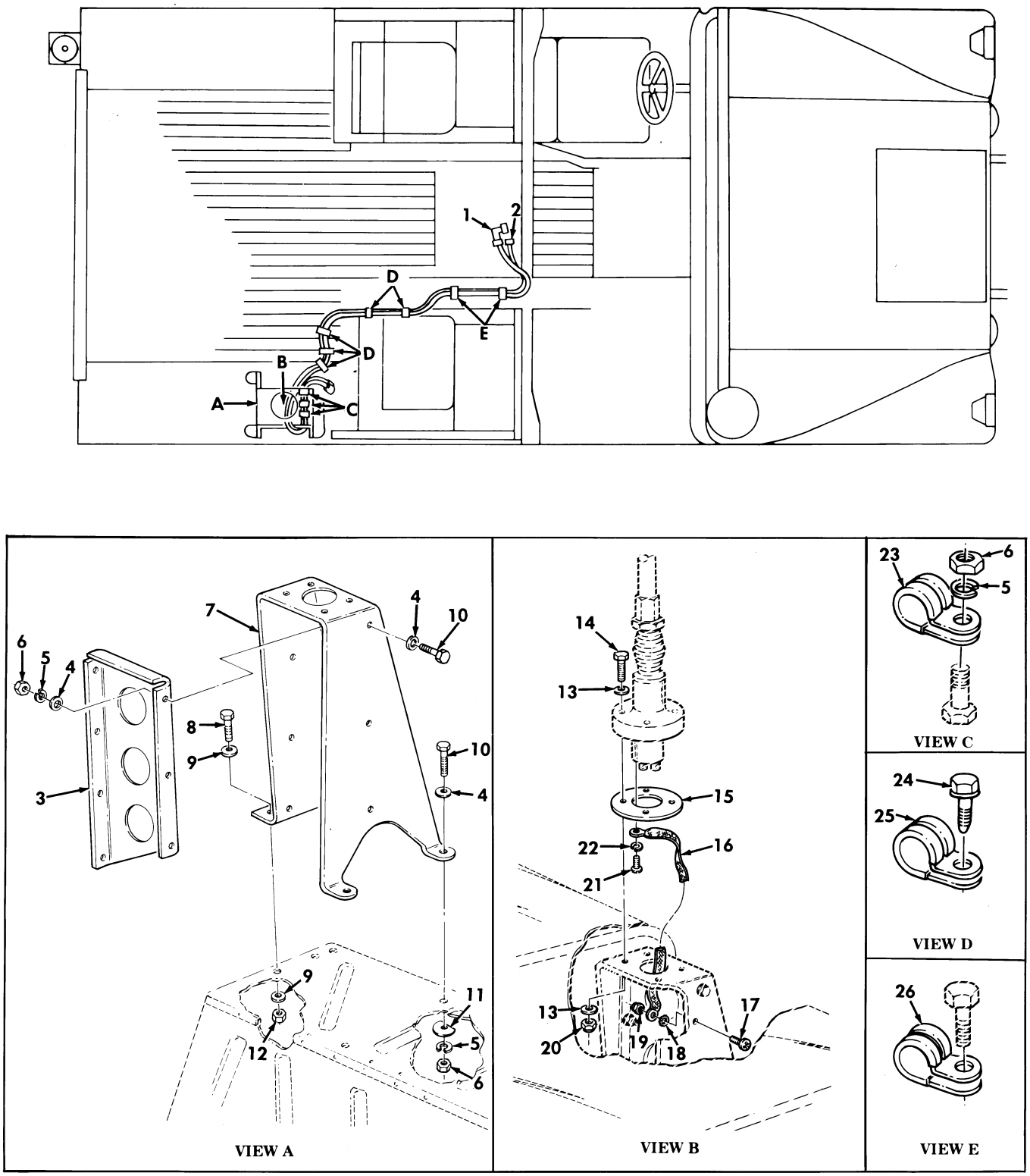

Figure 426. Communications Kit, Radio Cables, AN/VRC-46, (2) AN/VRC-46, (3) AN/VRC-46, AN/VRC-47, AN/VRC-48, AND AN/VRC-49.

(1) ITEM NO	(2) SMR CODE	(3) NSN	(4) CAGEC	(5) PART NUMBER	(6) DESCRIPTION AND USABLE ON CODES(UOC)	(7) QTY
					GROUP 3307 SPECIAL PURPOSE KITS	
					FIG. 426 COMMUNICATIONS KIT,RADIO CABLES,AN/VRC-46,(2) AN/VRC-46,(3) AN/VRC-46,AN/VRC-47,AN/VRC-48,AND AN/VRC-49	
1	PAOZZ	5995012901719	34623	5597137	CABLE ASSEMBLY,RADI PART OF KIT P/N 5596946..... UOC:A13,A14,H13,H14	1
2	PAOZZ	5995012916377	34623	5597138	CABLE ASSEMBLY,SPEC PART OF KIT P/N 5596946..... UOC:A13,A14,H13,H14	1
3	PAOZZ	5340012906343	34623	5597151	BRACKET,MOUNTING PART OF KIT P/N 5596946..... UOC:A13,A14,H13,H14	1
4	PAOZZ	5310012510748	34623	5593691	WASHER,FLAT 1/4 PART OF KIT P/N 5596946..... UOC:A13,A14,H13,H14	16
5	PAOZZ	5310005825965	96906	MS35338-44	WASHER,LOCK 1/4 PART OF KIT P/N 5596946..... UOC:A13,A14,H13,H14	12
6	PAOZZ	5310009050762	96906	MS51967-3	NUT,PLAIN,HEXAGON 1/4-20 PART OF KIT P/N 5596946..... UOC:A13,A14,H13,H14	12
7	PAOZZ	5340012904888	34623	5597155	BRACKET,MOUNTING PART OF KIT P/N 5596946..... UOC:A13,A14,H13,H14	1
8	PAOZZ	5305000711788	80204	B1821BH044C125N	SCREW,CAP,HEXAGON H 7/16-14 X 1.25 PART OF KIT P/N 5596946..... UOC:A13,A14,H13,H14	2
9	PAOZZ	5310013034701	96906	MS51412-1	WASHER,FLAT 15/32 PART OF KIT P/N 5596946..... UOC:A13,A14,H13,H14	4
10	PAOZZ	5305000680509	80204	B1821BH025C125N	SCREW,CAP,HEXAGON H 1/4-20 X 1.25 PART OF KIT P/N 5596946..... UOC:A13,A14,H13,H14	9
11	PAOZZ	5310012087576	19207	12338095	WASHER,FLAT 1/4 PART OF KIT P/N 5596946..... UOC:A13,A14,H13,H14	2
12	PAOZZ	5310008960903	96906	MS51967-12	NUT,PLAIN,HEXAGON 7/16-14 PART OF KIT P/N 5596946..... UOC:A13,A14,H13,H14	2
13	PAOZZ	5310014124013	24617	2436163	WASHER,FLAT 3/8 PART OF KIT P/N 5596946..... UOC:A13,A14,H13,H14	8
14	PAOZZ	5305012608881	34623	5593315	SCREW,CAP,HEXAGON H 3/8-16 X 2.25 PART OF KIT P/N 5596946..... UOC:A13,A14,H13,H14	4
15	PAOZZ	5330012708315	19207	12341876	GASKET PART OF KIT P/N 5596946..... UOC:A13,A14,H13,H14	1
16	PAOZZ	6150012078120	34623	12338099-1	LEAD,ELECTRICAL PART OF KIT P/N 5596946.....	1

(1) ITEM NO	(2) SMR CODE	(3) NSN	(4) CAGEC	(5) PART NUMBER	(6) DESCRIPTION AND USABLE ON CODES(UOC)	(7) QTY
					UOC:A13,A14,H13,H14	
17	PAOZZ	5305000593660	96906	MS51958-64	SCREW,MACHINE #10-32 X .625 PART OF KIT P/N 5596946.....	1
					UOC:A13,A14,H13,H14	
18	PAOZZ	5310000809786	96906	MS45904-60	WASHER,LOCK #10 PART OF KIT P/N 5596946.....	1
					UOC:A13,A14,H13,H14	
19	PAOZZ	5310012510726	34623	5593053	NUT,SELF-LOCKING,HE #10-32 PART OF KIT P/N 5596946.....	1
					UOC:A13,A14,H13,H14	
20	PAOZZ	5310009359021	96906	MS51943-35	NUT,SELF-LOCKING,HE 3/8-16 PART OF KIT P/N 5596946.....	4
					UOC:A13,A14,H13,H14	
21	PAOZZ	5305000593659	96906	MS51958-63	SCREW,MACHINE #10-32 X .50 PART OF KIT P/N 5596946.....	1
					UOC:A13,A14,H13,H14	
22	PAOZZ	5310000453296	96906	MS35338-43	WASHER,LOCK #10 PART OF KIT P/N 5596946.....	1
					UOC:A13,A14,H13,H14	
23	PAOZZ	5340008546729	96906	MS21333-103	CLAMP,LOOP PART OF KIT P/N 5596946..	3
					UOC:A13,A14,H13,H14	
24	PAOZZ	5305012596322	34623	12342499-1	SCREW,MACHINE #10-32 X 3/4 PART OF KIT P/N 5596946.....	5
					UOC:A13,A14,H13,H14	
25	PAOZZ	5340000913790	96906	MS21333-72	CLAMP,LOOP PART OF KIT P/N 5596946..	5
					UOC:A13,A14,H13,H14	
26	PAOZZ	5340000573043	96906	MS21333-112	CLAMP,LOOP PART OF KIT P/N 5596946..	2
					UOC:A13,A14,H13,H14	

END OF FIGURE

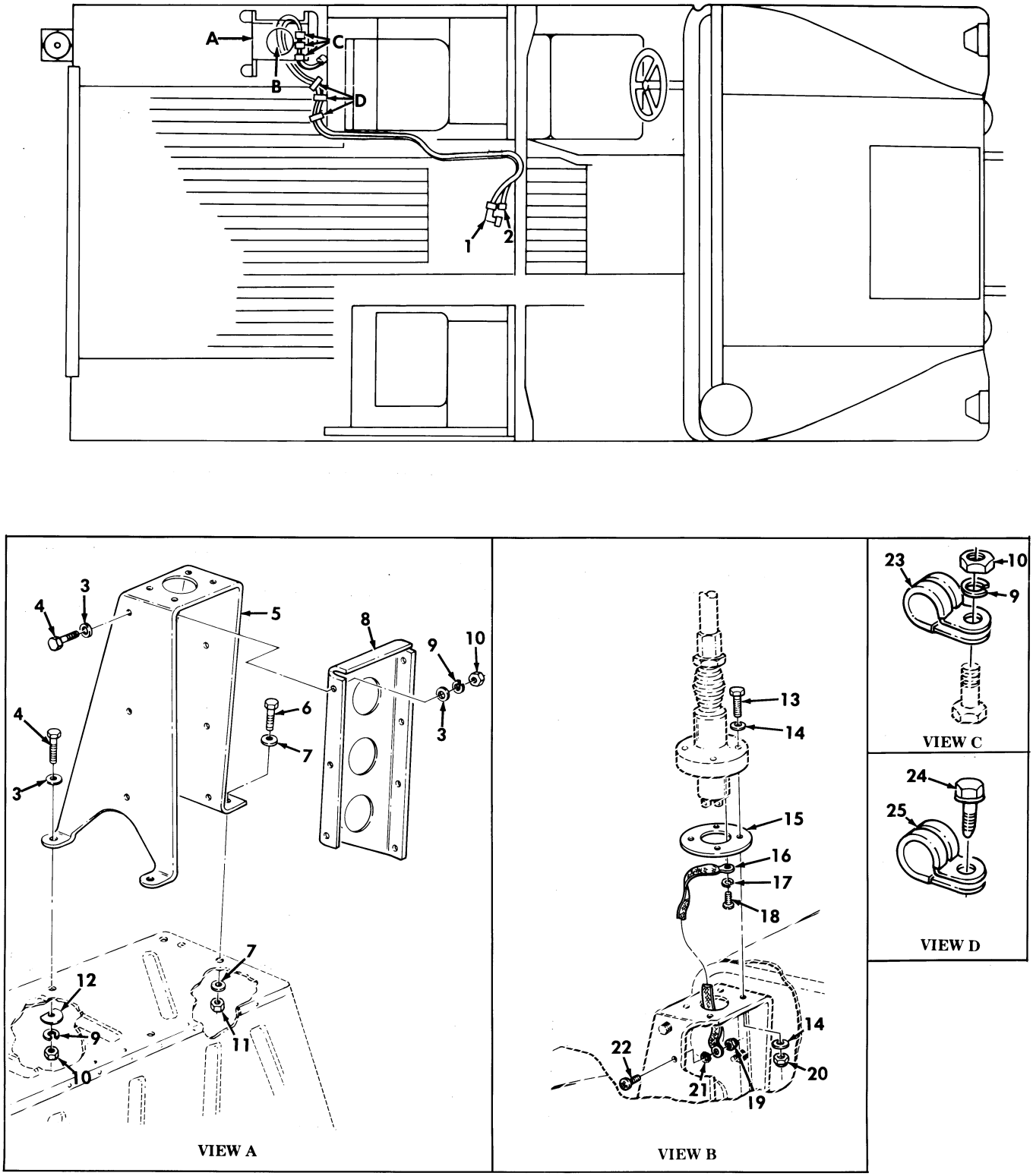

Figure 427. Communications Kit, Radio Cables, (2) AN/VRC-46 , (3) AN/VRC-47, and AN/VRC-49.

(1) ITEM NO	(2) SMR CODE	(3) NSN	(4) CAGEC	(5) PART NUMBER	(6) DESCRIPTION AND USABLE ON CODES(UOC)	(7) QTY
					GROUP 3307 SPECIAL PURPOSE KITS	
					FIG. 427 COMMUNICATIONS KIT,RADIO CABLES,(2) AN/VRC-46,(3) AN/VRC-47, AND AN/VRC-49	
1	PAOZZ	5995012901719	34623	5597137	CABLE ASSEMBLY,RADI PART OF KIT P/N 5596946..... UOC:A13,A14,H13,H14	1
2	PAOZZ	5995012916377	34623	5597138	CABLE ASSEMBLY,SPEC PART OF KIT P/N 5596946..... UOC:A13,A14,H13,H14	1
3	PAOZZ	5310012510748	34623	5593691	WASHER,FLAT 1/4 PART OF KIT P/N 5596946..... UOC:A13,A14,H13,H14	16
4	PAOZZ	5305000680509	80204	B1821BH025C125N	SCREW,CAP,HEXAGON H 1/4-20 X 1.25 PART OF KIT P/N 5596946..... UOC:A13,A14,H13,H14	9
5	PAOZZ	5340012904887	34623	5596843	BRACKET,MOUNTING PART OF KIT P/N 5596946..... UOC:A13,A14,H13,H14	1
6	PAOZZ	5305000711788	80204	B1821BH044C125N	SCREW,CAP,HEXAGON H 7/16-14 X 1.25 PART OF KIT P/N 5596946..... UOC:A13,A14,H13,H14	2
7	PAOZZ	5310013034701	96906	MS51412-1	WASHER,FLAT 15/32 PART OF KIT P/N 5596946..... UOC:A13,A14,H13,H14	4
8	PAOZZ	5340012915186	34623	5597150	BRACKET,MOUNTING PART OF KIT P/N 5596946..... UOC:A13,A14,H13,H14	1
9	PAOZZ	5310005825965	96906	MS35338-44	WASHER,LOCK 1/4 PART OF KIT P/N 5596946..... UOC:A13,A14,H13,H14	12
10	PAOZZ	5310009050762	96906	MS51967-3	NUT,PLAIN,HEXAGON 1/4-20 PART OF KIT P/N 5596946..... UOC:A13,A14,H13,H14	12
11	PAOZZ	5310008960903	96906	MS51967-12	NUT,PLAIN,HEXAGON 7/16-14 PART OF KIT P/N 5596946..... UOC:A13,A14,H13,H14	2
12	PAOZZ	5310012087576	19207	12338095	WASHER,FLAT 1/4 PART OF KIT P/N 5596946..... UOC:A13,A14,H13,H14	2
13	PAOZZ	5305012608881	34623	5593315	SCREW,CAP,HEXAGON H 3/8-16 X 2.25 PART OF KIT P/N 5596946..... UOC:A13,A14,H13,H14	4
14	PAOZZ	5310014124013	24617	2436163	WASHER,FLAT 3/8 PART OF KIT P/N 5596946..... UOC:A13,A14,H13,H14	8
15	PAOZZ	5330012708315	19207	12341876	GASKET PART OF KIT P/N 5596946..... UOC:A13,A14,H13,H14	1
16	PAOZZ	6150012078120	34623	12338099-1	LEAD,ELECTRICAL PART OF KIT P/N 5596946..... UOC:A13,A14,H13,H14	1

(1) ITEM NO	(2) SMR CODE	(3) NSN	(4) CAGEC	(5) PART NUMBER	(6) DESCRIPTION AND USABLE ON CODES(UOC)	(7) QTY
17	PAOZZ	5310000453296	96906	MS35338-43	WASHER,LOCK #10 PART OF KIT P/N 5596946..... UOC:A13,A14,H13,H14	1
18	PAOZZ	5305000593659	96906	MS51958-63	SCREW,MACHINE #10-32 X .50 PART OF KIT P/N 5596946..... UOC:A13,A14,H13,H14	1
19	PAOZZ	5310012510726	34623	5593053	NUT,SELF-LOCKING,HE #10-32 PART OF KIT P/N 5596946..... UOC:A13,A14,H13,H14	4
20	PAOZZ	5310009359021	96906	MS51943-35	NUT,SELF-LOCKING,HE 3/8-16 PART OF KIT P/N 5596946..... UOC:A13,A14,H13,H14	1
21	PAOZZ	5310000809786	96906	MS45904-60	WASHER,LOCK #10 PART OF KIT P/N 5596946..... UOC:A13,A14,H13,H14	1
22	PAOZZ	5305000593660	96906	MS51958-64	SCREW,MACHINE #10-32 X .625 PART OF KIT P/N 5596946..... UOC:A13,A14,H13,H14	1
23	PAOZZ	5340008546729	96906	MS21333-103	CLAMP,LOOP PART OF KIT P/N 5596946.. UOC:A13,A14,H13,H14	3
24	PAOZZ	5305012596322	34623	12342499-1	SCREW,MACHINE #10-32 X 3/4 PART OF KIT P/N 5596946..... UOC:A13,A14,H13,H14	3
25	PAOZZ	5340000913790	96906	MS21333-72	CLAMP,LOOP PART OF KIT P/N 5596946.. UOC:A13,A14,H13,H14	3

END OF FIGURE

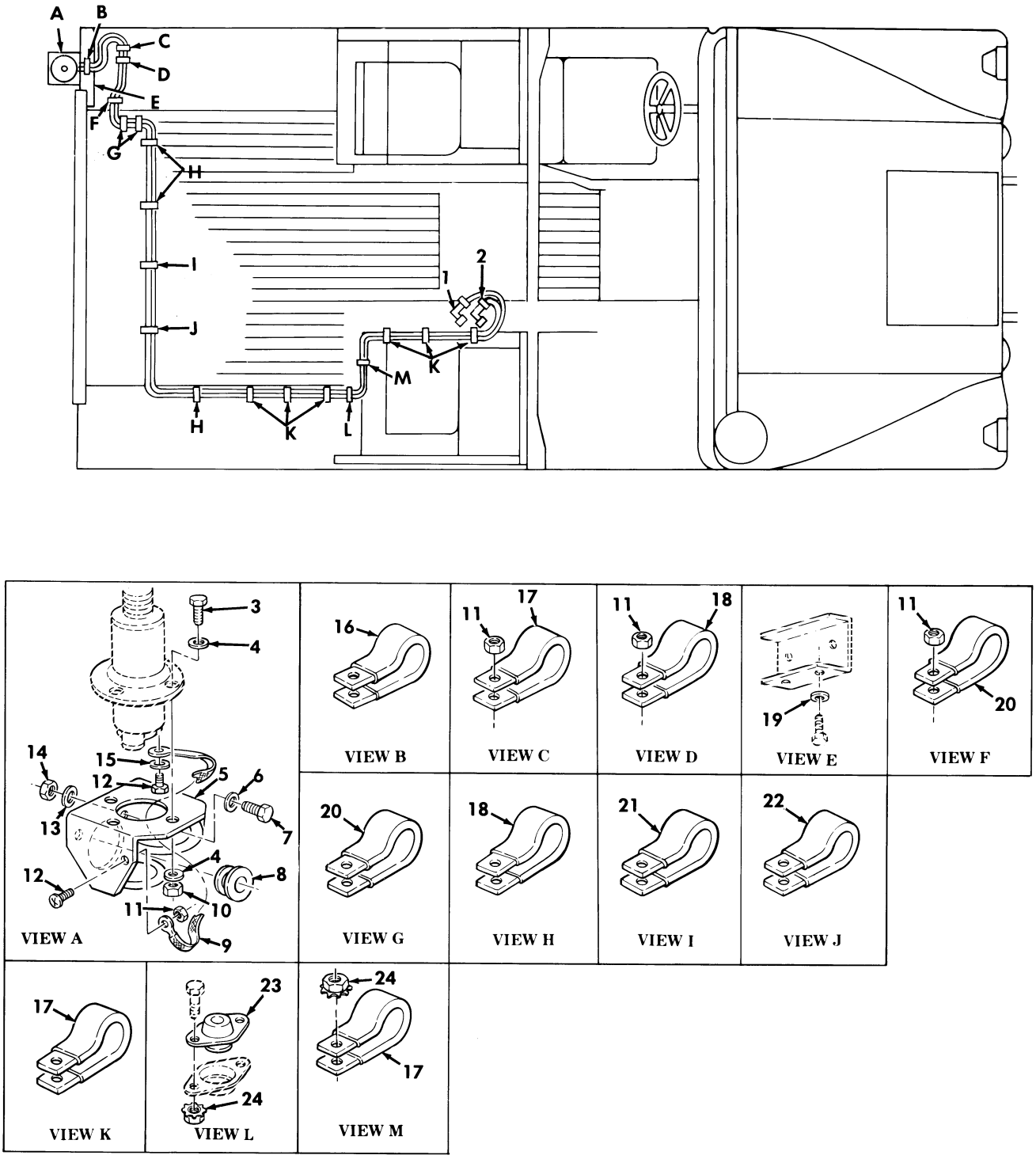

Figure 428. Communications Kit, Radio Cables, (3) AN/VRC-46.

(1) ITEM NO	(2) SMR CODE	(3) NSN	(4) CAGEC	(5) PART NUMBER	(6) DESCRIPTION AND USABLE ON CODES(UOC)	(7) QTY
					GROUP 3307 SPECIAL PURPOSE KITS	
					FIG. 428 COMMUNICATIONS KIT,RADIO CABLES,(3) AN/VRC-46	
1	PAOZZ	5995012916384	34623	5597496	CABLE ASSEMBLY,RADI PART OF KIT P/N 5596946..... UOC:A13,A14,H13,H14	1
2	PAOZZ	5995012516785	19201	12338089-4	CABLE ASSEMBLY,SPEC PART OF KIT P/N 5596946..... UOC:A13,A14,H13,H14	1
3	PAOZZ	5305007829489	80204	B1821BH038C200N	SCREW,CAP,HEXAGON H 3/8-16 X 2.00 PART OF KIT P/N 5596946..... UOC:A13,A14,H13,H14	4
4	PAOZZ	5310014124013	24617	2436163	WASHER,FLAT 3/8 PART OF KIT P/N 5596946..... UOC:A13,A14,H13,H14	8
5	PAOZZ	5985012159404	80063	A3046166	SUPPORT,ANTENNA LEFT REAR PART OF KIT P/N 5596946..... UOC:A13,A14,H13,H14	1
6	PAOZZ	5310012520512	34623	5592832	WASHER,FLAT 5/16 PART OF KIT P/N 5596946..... UOC:A13,A14,H13,H14	3
7	PAOZZ	5306002258499	96906	MS90725-34	BOLT,MACHINE 5/16-18 X 1.00 PART OF KIT P/N 5596946..... UOC:A13,A14,H13,H14	3
8	PAOZZ	5325007541155	96906	MS35489-50	GROMMET,NONMETALLIC PART OF KIT P/N 5596946..... UOC:A13,A14,H13,H14	1
9	PAOZZ	6150012078120	34623	12338099-1	LEAD,ELECTRICAL PART OF KIT P/N 5596946..... UOC:A13,A14,H13,H14	1
10	PAOZZ	5310009359021	96906	MS51943-35	NUT,SELF-LOCKING,HE 3/8-16 PART OF KIT P/N 5596946..... UOC:A13,A14,H13,H14	4
11	PAOZZ	5310012510726	34623	5593053	NUT,SELF-LOCKING,HE #10-32 PART OF KIT P/N 5596946..... UOC:A13,A14,H13,H14	4
12	PAOZZ	5305000593659	96906	MS51958-63	SCREW,MACHINE #10-32 X .50 PART OF KIT P/N 5596946..... UOC:A13,A14,H13,H14	2
13	PAOZZ	5310012087576	19207	12338095	WASHER,FLAT PART OF KIT P/N 5596946. UOC:A13,A14,H13,H14	3
14	PAOZZ	5310008140673	96906	MS51943-33	NUT,SELF-LOCKING,HE 5/16-18 PART OF KIT P/N 5596946..... UOC:A13,A14,H13,H14	3
15	PAOZZ	5310000453296	96906	MS35338-43	WASHER,LOCK #10 PART OF KIT P/N 5596946..... UOC:A13,A14,H13,H14	1
16	PAOZZ	5340008546730	96906	MS21333-124	CLAMP,LOOP PART OF KIT P/N 5596946.. UOC:A13,A14,H13,H14	1
17	PAOZZ	5340000572906	96906	MS21333-73	CLAMP,LOOP PART OF KIT P/N 5596946.. UOC:A13,A14,H13,H14	8

(1) ITEM NO	(2) SMR CODE	(3) NSN	(4) CAGEC	(5) PART NUMBER	(6) DESCRIPTION AND USABLE ON CODES(UOC)	(7) QTY
18	PAOZZ	5340009226300	96906	MS21333-77	CLAMP,LOOP PART OF KIT P/N 5596946.. UOC:A13,A14,H13,H14	4
19	PAOZZ	5310005825965	96906	MS35338-44	WASHER,LOCK 1/4 PART OF KIT P/N 5596946..... UOC:A13,A14,H13,H14	2
20	PAOZZ	5340007247038	96906	MS21333-76	CLAMP,LOOP PART OF KIT P/N 5596946.. UOC:A13,A14,H13,H14	3
21	PAOZZ	5340009588457	96906	MS21333-78	CLAMP,LOOP PART OF KIT P/N 5596946.. UOC:A13,A14,H13,H14	1
22	PAOZZ	5340000502740	96906	MS21333-75	CLAMP,LOOP PART OF KIT P/N 5596946.. UOC:A13,A14,H13,H14	1
23	PAOZZ	5325012555063	34623	5590155	GROMMET,NONMETALLIC PART OF KIT P/N 5596946..... UOC:A13,A14,H13,H14	1
24	PAOZZ	5310012538380	34623	5592818	NUT 1/4-20 PART OF KIT P/N 5596946. UOC:A13,A14,H13,H14	2
KIT	PDOZZ	5820012879612	34623	5596946	INSTALLATION KIT,EL..... UOC:A13,A14,H13,H14	1
					ADAPTER,ANTENNA TO (1) 425-13	
					BOLT,MACHINE (14) 417-4	
					BOLT,MACHINE (4) 417-7	
					BOLT,MACHINE (4) 418-4	
					BOLT,MACHINE (2) 418-7	
					BOLT,MACHINE (3) 418-6	
					BOLT,MACHINE (8) 419-5	
					BOLT,MACHINE (6) 419-7	
					BOLT,MACHINE (4) 419-8	
					BOLT,MACHINE (13) 420-1	
					BOLT,MACHINE (8) 420-3	
					BOLT,MACHINE (6) 420-5	
					BOLT,MACHINE (8) 421-1	
					BOLT,MACHINE (2) 421-7	
					BOLT,MACHINE (7) 421-8	
					BOLT,MACHINE (8) 422-1	
					BOLT,MACHINE (15) 422-3	
					BOLT,MACHINE (2) 422-9	
					BOLT,MACHINE (8) 423-1	
					BOLT,MACHINE (8) 423-3	
					BOLT,MACHINE (2) 423-7	
					BOLT,MACHINE (6) 423-8	
					BOLT,MACHINE (3) 428-7	
					BRACE,RACK (2) 423-5	
					BRACKET,ANGLE (1) 417-12	
					BRACKET,ANGLE (1) 417-14	
					BRACKET,ANGLE (1) 417-14	
					BRACKET,ANGLE (1) 421-10	
					BRACKET,ANGLE (2) 422-10	
					BRACKET,DOUBLE ANGL(4) 417-10	
					BRACKET,DOUBLE ANGL(1) 423-6	
					BRACKET,MOUNTING (2) 417-6	
					BRACKET,MOUNTING (2) 417-17	
					BRACKET,MOUNTING (1) 418-3	
					BRACKET,MOUNTING (2) 419-3	

(1) ITEM NO	(2) SMR CODE	(3) NSN	(4) CAGEC	(5) PART NUMBER	(6) DESCRIPTION AND USABLE ON CODES(UOC)	(7) QTY
					BRACKET,MOUNTING (2) 420-8	
					BRACKET,MOUNTING (1) 421-5	
					BRACKET,MOUNTING (1) 422-7	
					BRACKET,MOUNTING (2) 423-11	
					BRACKET,MOUNTING (1) 425-4	
					BRACKET,MOUNTING (1) 425-7	
					BRACKET,MOUNTING (1) 426-3	
					BRACKET,MOUNTING (1) 426-7	
					BRACKET,MOUNTING (1) 427-5	
					BRACKET,MOUNTING (1) 427-8	
					CABLE ASSEMBLY,POWE(1) 424-1	
					CABLE ASSEMBLY,RADI(1) 426-1	
					CABLE ASSEMBLY,RADI(1) 427-1	
					CABLE ASSEMBLY,RADI(1) 428-1	
					CABLE ASSEMBLY,SPEC(1) 425-1	
					CABLE ASSEMBLY,SPEC(1) 426-2	
					CABLE ASSEMBLY,SPEC(1) 427-2	
					CABLE ASSEMBLY,SPEC(1) 428-2	
					CLAMP,LOOP (2) 424-2	
					CLAMP,LOOP (1) 424-3	
					CLAMP,LOOP (1) 424-4	
					CLAMP,LOOP (3) 425-17	
					CLAMP,LOOP (3) 425-18	
					CLAMP,LOOP (3) 426-23	
					CLAMP,LOOP (5) 426-25	
					CLAMP,LOOP (2) 426-26	
					CLAMP,LOOP (3) 427-23	
					CLAMP,LOOP (3) 427-25	
					CLAMP,LOOP (1) 428-16	
					CLAMP,LOOP (8) 428-17	
					CLAMP,LOOP (4) 428-18	
					CLAMP,LOOP (3) 428-20	
					CLAMP,LOOP (1) 428-21	
					CLAMP,LOOP (1) 428-22	
					GASKET (1) 425-12	
					GASKET (1) 427-15	
					GASKET (1) 426-15	
					GROMMET,NONMETALLIC(1) 424-6	
					GROMMET,NONMETALLIC(1) 428-8	
					GROMMET,NONMETALLIC(1) 428-23	
					LEAD,ELECTRICAL (1) 426-16	
					LEAD,ELECTRICAL (1) 427-16	
					LEAD,ELECTRICAL (1) 428-9	
					NUT (2) 428-24	
					NUT,PLAIN,BLIND RIV(4) 417-8	
					NUT,PLAIN,HEXAGON (12) 425-9	
					NUT,PLAIN,HEXAGON (2) 425-10	
					NUT,PLAIN,HEXAGON (12) 426-6	
					NUT,PLAIN,HEXAGON (2) 426-12	
					NUT,PLAIN,HEXAGON (12) 427-10	
					NUT,PLAIN,HEXAGON (2) 427-11	
					NUT,SELF-LOCKING,HE(14) 417-11	
					NUT,SELF-LOCKING,HE(4) 417-18	

(1) ITEM NO	(2) SMR CODE	(3) NSN	(4) CAGEC	(5) PART NUMBER	(6) DESCRIPTION AND USABLE ON CODES(UOC)	(7) QTY
					NUT,SELF-LOCKING,HE(9) 418-8	
					NUT,SELF-LOCKING,HE(2) 418-9	
					NUT,SELF-LOCKING,HE(4) 419-4	
					NUT,SELF-LOCKING,HE(18) 419-9	
					NUT,SELF-LOCKING,HE(27) 420-4	
					NUT,SELF-LOCKING,HE(4) 420-6	
					NUT,SELF-LOCKING,HE(4) 421-6	
					NUT,SELF-LOCKING,HE(17) 421-9	
					NUT,SELF-LOCKING,HE(25) 422-4	
					NUT,SELF-LOCKING,HE(6) 422-8	
					NUT,SELF-LOCKING,HE(24) 423-4	
					NUT,SELF-LOCKING,HE(4) 423-9	
					NUT,SELF-LOCKING,HE(4) 425-16	
					NUT,SELF-LOCKING,HE(1) 426-19	
					NUT,SELF-LOCKING,HE(4) 426-20	
					NUT,SELF-LOCKING,HE(4) 427-19	
					NUT,SELF-LOCKING,HE(1) 427-20	
					NUT,SELF-LOCKING,HE(4) 428-10	
					NUT,SELF-LOCKING,HE(4) 428-11	
					NUT,SELF-LOCKING,HE(3) 428-14	
					PROTECTOR,EDGE (1) 417-13	
					RIVET,BLIND (8) 417-9	
					SCREW,CAP,HEXAGON H(4) 417-3	
					SCREW,CAP,HEXAGON H(2) 417-16	
					SCREW,CAP,HEXAGON H(2) 418-1	
					SCREW,CAP,HEXAGON H(4) 419-1	
					SCREW,CAP,HEXAGON H(4) 420-9	
					SCREW,CAP,HEXAGON H(2) 421-3	
					SCREW,CAP,HEXAGON H(2) 421-11	
					SCREW,CAP,HEXAGON H(2) 422-5	
					SCREW,CAP,HEXAGON H(4) 422-11	
					SCREW,CAP,HEXAGON H(4) 423-12	
					SCREW,CAP,HEXAGON H(9) 425-3	
					SCREW,CAP,HEXAGON H(2) 425-5	
					SCREW,CAP,HEXAGON H(4) 425-14	
					SCREW,CAP,HEXAGON H(9) 426-10	
					SCREW,CAP,HEXAGON H(4) 426-14	
					SCREW,CAP,HEXAGON H(9) 427-4	
					SCREW,CAP,HEXAGON H(2) 427-6	
					SCREW,CAP,HEXAGON H(4) 427-13	
					SCREW,CAP,HEXAGON H(4) 428-3	
					SCREW,CAP,HEXAGON H(2) 426-8	
					SCREW,MACHINE (1) 424-5	
					SCREW,MACHINE (3) 425-19	
					SCREW,MACHINE (1) 426-17	
					SCREW,MACHINE (1) 426-21	
					SCREW,MACHINE (5) 426-24	
					SCREW,MACHINE (1) 427-18	
					SCREW,MACHINE (1) 427-22	
					SCREW,MACHINE (3) 427-24	
					SCREW,MACHINE (2) 428-12	
					SHELF,ELECTRICAL EQ(2) 417-1	
					SUPPORT,ANTENNA (1) 428-5	

(1) ITEM NO	(2) SMR CODE	(3) NSN	(4) CAGEC	(5) PART NUMBER	(6) DESCRIPTION AND USABLE ON CODES(UOC)	(7) QTY
					WASHER,FLAT (8) 417-2	
					WASHER,FLAT (32) 417-5	
					WASHER,FLAT (2) 417-15	
					WASHER,FLAT (4) 418-2	
					WASHER,FLAT (18) 418-5	
					WASHER,FLAT (8) 419-2	
					WASHER,FLAT (36) 419-6	
					WASHER,FLAT (54) 420-2	
					WASHER,FLAT (8) 420-7	
					WASHER,FLAT (34) 421-2	
					WASHER,FLAT (8) 421-4	
					WASHER,FLAT (50) 422-2	
					WASHER,FLAT (12) 422-6	
					WASHER,FLAT (48) 423-2	
					WASHER,FLAT (8) 423-10	
					WASHER,FLAT (16) 425-2	
					WASHER,FLAT (4) 425-6	
					WASHER,FLAT (2) 425-11	
					WASHER,FLAT (8) 425-15	
					WASHER,FLAT (16) 426-4	
					WASHER,FLAT (4) 426-9	
					WASHER,FLAT (2) 426-11	
					WASHER,FLAT (8) 426-13	
					WASHER,FLAT (16) 427-3	
					WASHER,FLAT (4) 427-7	
					WASHER,FLAT (2) 427-12	
					WASHER,FLAT (8) 427-14	
					WASHER,FLAT (8) 428-4	
					WASHER,FLAT (3) 428-6	
					WASHER,FLAT (3) 428-13	
					WASHER,LOCK (3) 424-7	
					WASHER,LOCK (12) 425-8	
					WASHER,LOCK (12) 426-5	
					WASHER,LOCK (1) 426-18	
					WASHER,LOCK (1) 426-22	
					WASHER,LOCK (12) 427-9	
					WASHER,LOCK (1) 427-17	
					WASHER,LOCK (1) 427-21	
					WASHER,LOCK (1) 428-15	
					WASHER,LOCK (2) 428-19	

END OF FIGURE

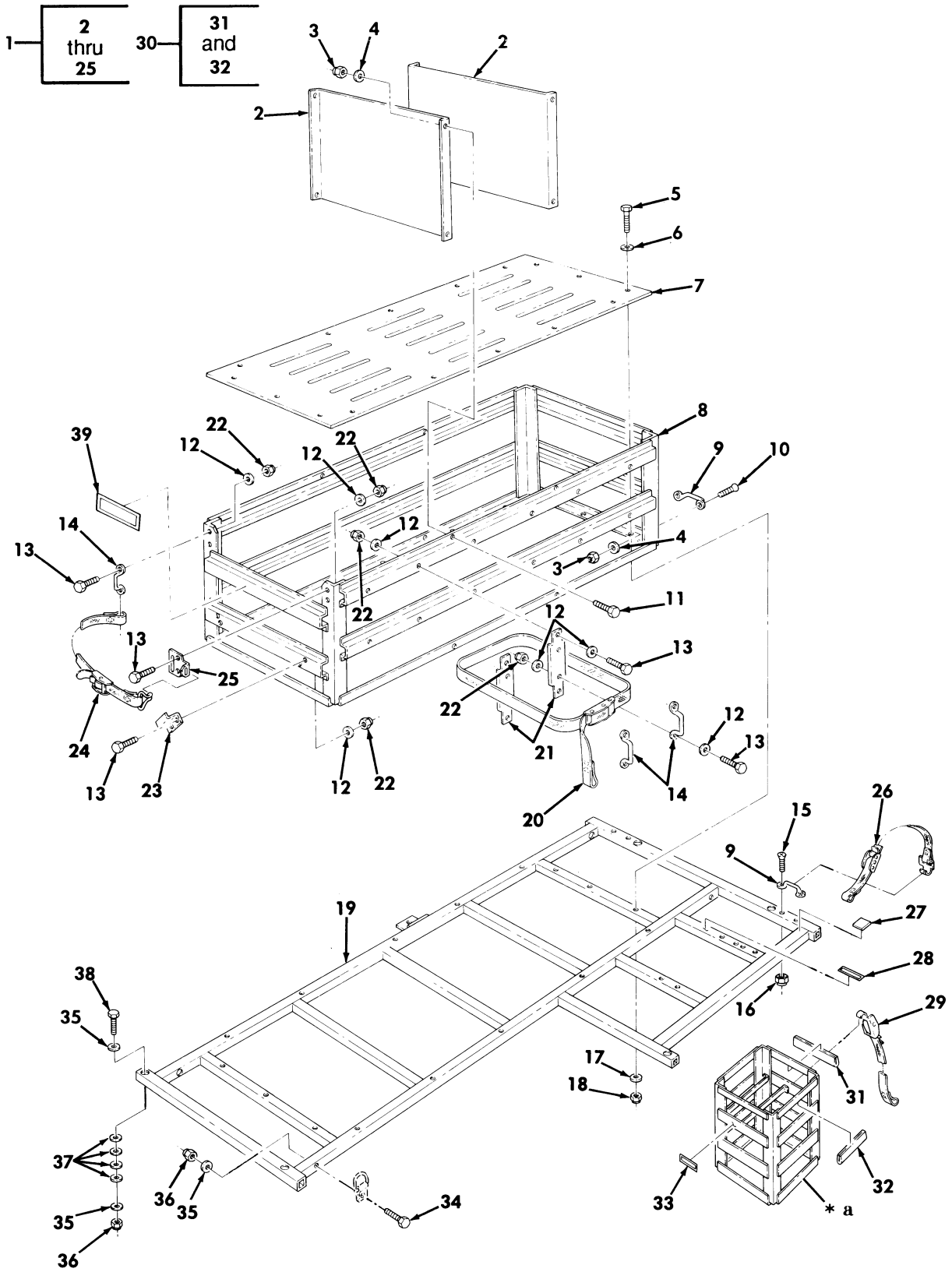

* a PART OF ITEM 30

Figure 429. 81 MM Mortar Kit, Container Assembly, and Stowage Rack.

(1) ITEM NO	(2) SMR CODE	(3) NSN	(4) CAGEC	(5) PART NUMBER	(6) DESCRIPTION AND USABLE ON CODES(UOC)	(7) QTY
					GROUP 3307 SPECIAL PURPOSE KITS	
					FIG. 429 81 MM MORTOR KIT,CONTAINER ASSEMBLY,AND STOWAGE RACK	
1	PFOOO	2540012507589	19207	12340422	BOX,AMMUNITION STOW PART OF KIT P/N 12338103..... UOC:AVY,A13,A14,BVY,HVY,H13,H14,NNN	1
2	PFOZZ	5340012893243	34623	5594249	.BRACKET,MOUNTING..... UOC:AVY,A13,A14,BVY,HVY,H13,H14,NNN	2
3	PAOZZ	5310012033217	34623	5584710	.NUT,SELF-LOCKING,HE #10-24..... UOC:AVY,A13,A14,BVY,HVY,H13,H14,NNN	22
4	PAOZZ	5310000145850	96906	MS27183-42	.WASHER,FLAT #10..... UOC:AVY,A13,A14,BVY,HVY,H13,H14,NNN	22
5	PAOZZ	5306002264835	80204	B1821BH031C250N	.BOLT,MACHINE 5/16-18 X 2.50..... UOC:AVY,A13,A14,BVY,HVY,H13,H14,NNN	16
6	PAOZZ	5310000814219	96906	MS27183-12	.WASHER,FLAT 5/16..... UOC:AVY,A13,A14,BVY,HVY,H13,H14,NNN	16
7	PFOZZ	9515012491591	34623	5594252	.PLATE,FLOOR,METAL..... UOC:AVY,A13,A14,BVY,HVY,H13,H14,NNN	1
8	PFOZZ	2540012491592	19207	12340413	.FRAME ASSEMBLY MORT..... UOC:AVY,A13,A14,BVY,HVY,H13,H14,NNN	1
9	PAOZZ	5340011918186	34623	5582608	.HANDLE,BOW..... UOC:AVY,A13,A14,BVY,HVY,H13,H14,NNN	6
10	PAOZZ	5305000888332	80205	MS35190-272	.SCREW,MACHINE #10-24 X .62..... UOC:AVY,A13,A14,BVY,HVY,H13,H14,NNN	2
11	PAOZZ	5305010062053	96906	MS51849-75	.SCREW,MACHINE #10-24 X .62..... UOC:AVY,A13,A14,BVY,HVY,H13,H14,NNN	20
12	PAOZZ	5310008094058	96906	MS27183-10	.WASHER,FLAT 1/4..... UOC:AVY,A13,A14,BVY,HVY,H13,H14,NNN	58
13	PAOZZ	5305012566870	34623	5592817	.SCREW,CAP,HEXAGON H 1/4-20 X 3/4.. UOC:AVY,A13,A14,BVY,HVY,H13,H14,NNN	32
14	PAOZZ	5340011978674	34623	5583568	.HANDLE,BOW..... UOC:AVY,A13,A14,BVY,HVY,H13,H14,NNN	7
15	PAOZZ	5305009847343	96906	MS35191-276	.SCREW,MACHINE #10-32 X 1.00..... UOC:AVY,A13,A14,BVY,HVY,H13,H14,NNN	10
16	PAOZZ	5310011981723	19207	12339998-14	.NUT,PLAIN,BLIND RIV #10-32..... UOC:AVY,A13,A14,BVY,HVY,H13,H14,NNN	4
17	PAOZZ	5310000877493	96906	MS27183-13	.WASHER,FLAT 5/16..... UOC:AVY,A13,A14,BVY,HVY,H13,H14,NNN	16
18	PAOZZ	5310008140673	96906	MS51943-33	.NUT,SELF-LOCKING,HE 5/16-18..... UOC:AVY,A13,A14,BVY,HVY,H13,H14,NNN	16
19	PFOZZ	2540012491593	19207	12340419	.BASE ASSEMBLY,MORT..... UOC:AVY,A13,A14,BVY,HVY,H13,H14,NNN	1
20	PAOZZ	5340012570908	31272	45503-10	.STRAP,WEBBING..... UOC:AVY,A13,A14,BVY,HVY,H13,H14,NNN	3
21	PFOZZ	5340012491594	19207	12340382	.BRACKET,MOUNTING..... UOC:AVY,A13,A14,BVY,HVY,H13,H14,NNN	6
22	PAOZZ	5310000614650	96906	MS51943-31	.NUT,SELF-LOCKING,HE 1/4-20..... UOC:AVY,A13,A14,BVY,HVY,H13,H14,NNN	32
23	PFOZZ	5340012552729	19207	12340366	.BRACKET,DOUBLE ANGL..... UOC:AVY,A13,A14,BVY,HVY,H13,H14,NNN	2
24	PAOZZ	5340012609026	31272	45502-10	.STRAP,WEBBING.....	1

(1) ITEM NO	(2) SMR CODE	(3) NSN	(4) CAGEC	(5) PART NUMBER	(6) DESCRIPTION AND USABLE ON CODES(UOC)	(7) QTY
25	PFOZZ	2590012563628	31272	44931-11	UOC:AVY,A13,A14,BVY,HVY,H13,H14,NNN .BRACKET,AMMO CONTAI.....	1
26	PAOZZ	2590011854390	31272	44672-11	UOC:AVY,A13,A14,BVY,HVY,H13,H14,NNN STRAP ASSEMBLY,TOOL PART OF KIT P/N 12338103.....	2
27	PAOZZ	5330011983521	19207	12340721	UOC:AVY,A13,A14,BVY,HVY,H13,H14,NNN RUBBER STRIP PART OF KIT P/N 12338103.....	5
28	PAOZZ	7690012487679	19207	12340377	UOC:AVY,A13,A14,BVY,HVY,H13,H14,NNN DECAL PART OF KIT P/N 12338103.....	1
29	PAOZZ	5340012547191	31272	45410-10	UOC:AVY,A13,A14,BVY,HVY,H13,H14,NNN STRAP,WEBBING PART OF KIT P/N 12338103.....	2
30	PFOZZ	2540012491595	19207	12340401	UOC:AVY,A13,A14,BVY,HVY,H13,H14,NNN RACK ASSEMBLY,AMMO PART OF KIT P/N 12338103.....	1
31	MOOZZ		34623	5595995	UOC:AVY,A13,A14,BVY,HVY,H13,H14,NNN .U-CHANNEL MAKE FROM TUBING,P/N M6855/4-16H029,8.3 INCHES LONG.....	2
32	MOOZZ		34623	5594278	UOC:AVY,A13,A14,BVY,HVY,H13,H14,NNN .U-CHANNEL MAKE FROM TUBING,P/N M6855/4-16H029,6.3 INCHES LONG.....	2
33	PAOZZ	7690012487680	19207	12340372	UOC:AVY,A13,A14,BVY,HVY,H13,H14,NNN DECAL PART OF KIT P/N 12338103.....	1
34	PAOZZ	5305000712067	80204	B1821BH050C125N	UOC:AVY,A13,A14,BVY,HVY,H13,H14,NNN SCREW,CAP,HEXAGON H 1/2-13 X 1.25 PART OF KIT P/N 12338103.....	4
35	PAOZZ	5310001670823	88044	AN960-816	UOC:AVY,A13,A14,BVY,HVY,H13,H14,NNN WASHER,FLAT 1/2 PART OF KIT P/N 12338103.....	12
36	PAOZZ	5310004883889	96906	MS51943-39	UOC:AVY,A13,A14,BVY,HVY,H13,H14,NNN NUT,SELF-LOCKING,HE 1/2-13 PART OF KIT P/N 12338103.....	6
37	PAOZZ	5310008095997	96906	MS27183-17	UOC:AVY,A13,A14,BVY,HVY,H13,H14,NNN WASHER,FLAT 1/2 PART OF KIT P/N 12338103.....	24
38	PAOZZ	5305000712070	80204	B1821BH050C175N	UOC:AVY,A13,A14,BVY,HVY,H13,H14,NNN SCREW,CAP,HEXAGON H 1/2-13 X 1.75 PART OF KIT P/N 12338103.....	6
39	PAOZZ	7690012487681	19207	12340379	UOC:AVY,A13,A14,BVY,HVY,H13,H14,NNN DECAL PART OF KIT P/N 12338103..... UOC:AVY,A13,A14,BVY,HVY,H13,H14,NNN	1

END OF FIGURE

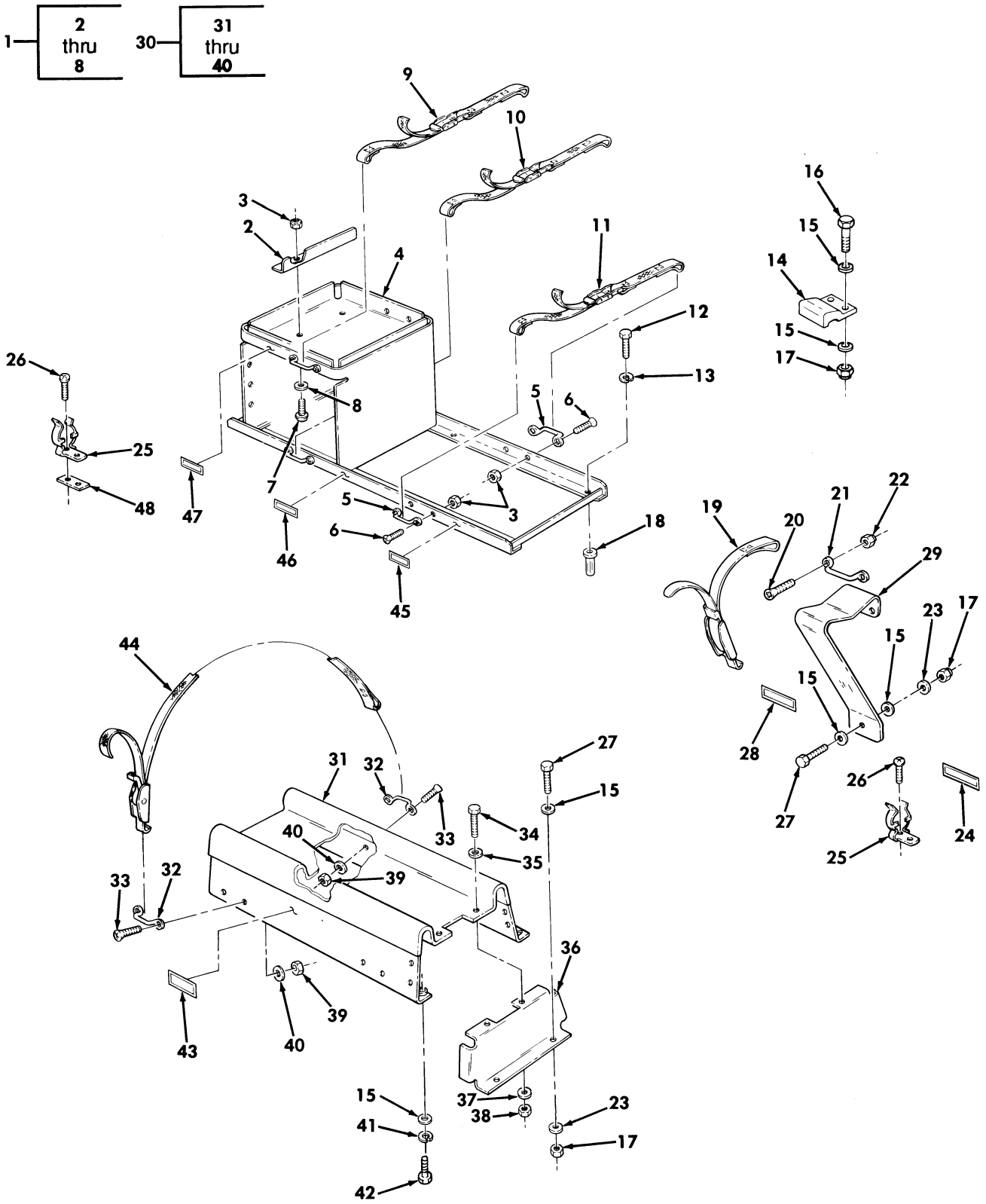

Figure 430. 81 MM Mortar Kit, Equipment Rack Assembly, Barrel Stowage Bracket, and Bipod Stowage Tray Assembly.

(1) ITEM NO	(2) SMR CODE	(3) NSN	(4) CAGEC	(5) PART NUMBER	(6) DESCRIPTION AND USABLE ON CODES(UOC)	(7) QTY
					GROUP 3307 SPECIAL PURPOSE KITS	
					FIG. 430 81 MM MORTOR KIT,EQUIPMENT RACK ASSEMBLY,BARREL STOWAGE BRACKET ,AND BIPOD STOWAGE TRAY ASSEMBLY	
1	PFOOO	2590012491596	19207	12340414	RACK,AMMUNITION STO PART OF KIT P/N 12338103..... UOC:AVY,A13,A14,BVY,HVY,H13,H14,NNN	1
2	PFOZZ	5340012559515	19207	12340390	.BRACKET,ANGLE..... UOC:AVY,A13,A14,BVY,HVY,H13,H14,NNN	1
3	PAOZZ	5310012033217	34623	5584710	.NUT,SELF-LOCKING,HE #10-24..... UOC:AVY,A13,A14,BVY,HVY,H13,H14,NNN	14
4	PFOZZ	2540012491597	19207	12340421	.RACK ASSEMBLY,81MM..... UOC:AVY,A13,A14,BVY,HVY,H13,H14,NNN	1
5	PAOZZ	5340011918186	34623	5582608	.HANDLE,BOW..... UOC:AVY,A13,A14,BVY,HVY,H13,H14,NNN	6
6	PAOZZ	5305000888332	80205	MS35190-272	.SCREW,MACHINE #10-24 X .62..... UOC:AVY,A13,A14,BVY,HVY,H13,H14,NNN	12
7	PAOZZ	5305009846210	08484	WA-1429-10	.SCREW,MACHINE #10-24 X 1/2..... UOC:AVY,A13,A14,BVY,HVY,H13,H14,NNN	2
8	PAOZZ	5310000145850	96906	MS27183-42	.WASHER,FLAT #10..... UOC:AVY,A13,A14,BVY,HVY,H13,H14,NNN	2
9	PAOZZ	5340012552812	31272	44648-26	STRAP,WEBBING PART OF KIT P/N 12338103..... UOC:AVY,A13,A14,BVY,HVY,H13,H14,NNN	1
10	PAOZZ	5340012572644	31272	45096-13	STRAP,WEBBING PART OF KIT P/N 12338103..... UOC:AVY,A13,A14,BVY,HVY,H13,H14,NNN	1
11	PAOZZ	5340012560942	31272	44648-25	STRAP,WEBBING PART OF KIT P/N 12338103..... UOC:AVY,A13,A14,BVY,HVY,H13,H14,NNN	1
12	PAOZZ	5306010758519	96906	MS90725-36	BOLT,MACHINE 5/16-18 X 1.25 PART OF KIT P/N 12338103..... UOC:AVY,A13,A14,BVY,HVY,H13,H14,NNN	6
13	PAOZZ	5310004079566	96906	MS35338-45	WASHER,LOCK 5/16 PART OF KIT P/N 12338103..... UOC:AVY,A13,A14,BVY,HVY,H13,H14,NNN	6
14	PAOZZ	5340012646108	34623	5597186	STRAP,RETAINING PART OF KIT P/N 12338103..... UOC:AVY,A13,A14,BVY,HVY,H13,H14,NNN	2
15	PAOZZ	5310008094058	96906	MS27183-10	WASHER,FLAT 1/4 PART OF KIT P/N 12338103..... UOC:AVY,A13,A14,BVY,HVY,H13,H14,NNN	24
16	PAOZZ	5305002253842	80204	B1821BH025C113N	SCREW,CAP,HEXAGON H 1/4-20 X 1.125 PART OF KIT P/N 12338103..... UOC:AVY,A13,A14,BVY,HVY,H13,H14,NNN	4
17	PAOZZ	5310000614650	96906	MS51943-31	NUT,SELF-LOCKING,HE 1/4-20 PART OF KIT P/N 12338103..... UOC:AVY,A13,A14,BVY,HVY,H13,H14,NNN	15
18	PAOZZ	5310011981724	03481	S31P280	NUT,PLAIN,BLIND RIV 5/16-18 PART OF KIT P/N 12338103..... UOC:AVY,A13,A14,BVY,HVY,H13,H14,NNN	6

(1) ITEM NO	(2) SMR CODE	(3) NSN	(4) CAGEC	(5) PART NUMBER	(6) DESCRIPTION AND USABLE ON CODES(UOC)	(7) QTY
19	PAOZZ	5340012547191	31272	45410-10	STRAP,WEBBING PART OF KIT P/N 12338103..... UOC:AVY,A13,A14,BVY,HVY,H13,H14,NNN	2
20	PAOZZ	5305000888332	80205	MS35190-272	SCREW,MACHINE #10-24 X .62 PART OF KIT P/N 12338103..... UOC:AVY,A13,A14,BVY,HVY,H13,H14,NNN	4
21	PAOZZ	5340011918186	34623	5582608	HANDLE,BOW PART OF KIT P/N 12338103. UOC:AVY,A13,A14,BVY,HVY,H13,H14,NNN	2
22	PAOZZ	5310012033217	34623	5584710	NUT,SELF-LOCKING,HE #10-24 PART OF KIT P/N 12338103..... UOC:AVY,A13,A14,BVY,HVY,H13,H14,NNN	4
23	PAOZZ	5310011023270	24617	2436161	WASHER,FLAT 1/4 PART OF KIT P/N 12338103..... UOC:AVY,A13,A14,BVY,HVY,H13,H14,NNN	11
24	PAOZZ	7690012487682	19207	12340374	DECAL PART OF KIT P/N 12338103..... UOC:AVY,A13,A14,BVY,HVY,H13,H14,NNN	1
25	PAOZZ	5340012573778	19207	12340387	CLIP,SPRING TENSION PART OF KIT P/N 12338103..... UOC:AVY,A13,A14,BVY,HVY,H13,H14,NNN	2
26	PAOZZ	5305012560406	34623	5593006	SCREW,ASSEMBLED WAS #10-32 X 3/4 PART OF KIT P/N 12338103..... UOC:AVY,A13,A14,BVY,HVY,H13,H14,NNN	4
27	PAOZZ	5305012566870	34623	5592817	SCREW,CAP,HEXAGON H 1/4-20 X 3/4 PART OF KIT P/N 12338103..... UOC:AVY,A13,A14,BVY,HVY,H13,H14,NNN	11
28	PAOZZ	7690012484907	19207	12340423	MARKER,IDENTIFICATI PART OF KIT P/N 12338103..... UOC:AVY,A13,A14,BVY,HVY,H13,H14,NNN	1
29	PFOZZ	5342012607853	34623	5593990	BRACKET,SPECIAL PART OF KIT P/N 12338103..... UOC:AVY,A13,A14,BVY,HVY,H13,H14,NNN	2
30	PFOZZ	2540012491598	19207	12340411	TRAY ASSEMBLY,BIPOD PART OF KIT P/N 12338103..... UOC:AVY,A13,A14,BVY,HVY,H13,H14,NNN	1
31	PFOZZ	2540012507592	19207	12340420	.TRAY,STOWAGE,BIPOD..... UOC:AVY,A13,A14,BVY,HVY,H13,H14,NNN	1
32	PAOZZ	5340011918186	34623	5582608	.HANDLE,BOW..... UOC:AVY,A13,A14,BVY,HVY,H13,H14,NNN	4
33	PAOZZ	5305000888332	80205	MS35190-272	.SCREW,MACHINE #10-24 X .64..... UOC:AVY,A13,A14,BVY,HVY,H13,H14,NNN	8
34	PAOZZ	5305012566870	34623	5592817	.SCREW,CAP,HEXAGON H 1/4-20 X 3/4.. UOC:AVY,A13,A14,BVY,HVY,H13,H14,NNN	6
35	PAOZZ	5310008093078	96906	MS27183-11	.WASHER,FLAT 1/4..... UOC:AVY,A13,A14,BVY,HVY,H13,H14,NNN	6
36	PFOZZ	5340012487649	19207	12340409	.BRACKET,DOUBLE ANGL..... UOC:AVY,A13,A14,BVY,HVY,H13,H14,NNN	1
37	PAOZZ	5310011023270	24617	2436161	.WASHER,FLAT 1/4..... UOC:AVY,A13,A14,BVY,HVY,H13,H14,NNN	6
38	PAOZZ	5310000614650	96906	MS51943-31	.NUT,SELF-LOCKING,HE 1/4-20..... UOC:AVY,A13,A14,BVY,HVY,H13,H14,NNN	6
39	PAOZZ	5310012033217	34623	5584710	.NUT,SELF-LOCKING,HE #10-24..... UOC:AVY,A13,A14,BVY,HVY,H13,H14,NNN	8
40	PAOZZ	5310000145850	96906	MS27183-42	.WASHER,FLAT #10.....	8

(1) ITEM NO	(2) SMR CODE	(3) NSN	(4) CAGEC	(5) PART NUMBER	(6) DESCRIPTION AND USABLE ON CODES(UOC)	(7) QTY
41	PAOZZ	5310005825965	96906	MS35338-44	UOC:AVY,A13,A14,BVY,HVY,H13,H14,NNN WASHER,LOCK 1/4 PART OF KIT P/N 12338103.....	3
42	PAOZZ	5305002253843	80204	B1821BH025C100N	UOC:AVY,A13,A14,BVY,HVY,H13,H14,NNN SCREW,CAP,HEXAGON H 1/4-20 X 1.00 PART OF KIT P/N 12338103.....	3
43	PAOZZ	7690012484908	19207	12340373	UOC:AVY,A13,A14,BVY,HVY,H13,H14,NNN DECAL PART OF KIT P/N 12338103.....	1
44	PAOZZ	5340012547190	31272	45410-11	UOC:AVY,A13,A14,BVY,HVY,H13,H14,NNN STRAP,WEBBING PART OF KIT P/N 12338103.....	2
45	PAOZZ	7690012484909	19207	12340375	UOC:AVY,A13,A14,BVY,HVY,H13,H14,NNN DECAL PART OF KIT P/N 12338103.....	1
46	PAOZZ	7690012487683	19207	12340378	UOC:AVY,A13,A14,BVY,HVY,H13,H14,NNN DECAL PART OF KIT P/N 12338103.....	1
47	PAOZZ	7690012501101	19207	12340376	UOC:AVY,A13,A14,BVY,HVY,H13,H14,NNN DECAL PART OF KIT P/N 12338103.....	1
48	PFOZZ	5975011975505	19207	12340167	UOC:AVY,A13,A14,BVY,HVY,H13,H14,NNN MOUNTING BASE,ELECT PART OF KIT P/N 12338103.....	1
KIT	PDOZZ	2540012507591	34623	12338103	UOC:AVY,A13,A14,BVY,HVY,H13,H14,NNN INSTALLATION AND EQ.....	1
					UOC:AVY,A13,A14,BVY,HVY,H13,H14,NNN	
					BOLT,MACHINE (6) 430-12	
					BOX,AMMUNITION STOW(1) 429-1	
					BRACKET,SPECIAL (2) 430-29	
					CLIP,SPRING TENSION(2) 430-25	
					DECAL (1) 429-28	
					DECAL (1) 429-33	
					DECAL (1) 429-39	
					DECAL (1) 430-24	
					DECAL (1) 430-43	
					DECAL (1) 430-45	
					DECAL (1) 430-46	
					DECAL (1) 430-47	
					HANDLE,BOW (2) 430-21	
					MARKER,IDENTIFICATI(1) 430-28	
					MOUNTING BASE,ELECT(1) 430-48	
					NUT,PLAIN,BLIND RIV(6) 430-18	
					NUT,SELF-LOCKING,HE(6) 429-36	
					NUT,SELF-LOCKING,HE(15) 430-17	
					NUT,SELF-LOCKING,HE(4) 430-22	
					RACK,AMMUNITION STO(1) 430-1	
					RACK ASSEMBLY,AMMO (1) 429-30	
					RUBBER STRIP (5) 429-27	
					SCREW,ASSEMBLED WAS(4) 430-26	
					SCREW,CAP,HEXAGON H(4) 429-34	
					SCREW,CAP,HEXAGON H(6) 429-38	
					SCREW,CAP,HEXAGON H(4) 430-16	
					SCREW,CAP,HEXAGON H(11) 430-27	
					SCREW,CAP,HEXAGON H(3) 430-42	
					SCREW,MACHINE (4) 430-20	
					STRAP ASSEMBLY,TOOL(2) 429-26	

(1) ITEM NO	(2) SMR CODE	(3) NSN	(4) CAGEC	(5) PART NUMBER	(6) DESCRIPTION AND USABLE ON CODES(UOC)	(7) QTY
					STRAP,RETAINING (2) 430-14	
					STRAP,WEBBING (2) 429-29	
					STRAP,WEBBING (1) 430-9	
					STRAP,WEBBING (1) 430-10	
					STRAP,WEBBING (1) 430-11	
					STRAP,WEBBING (2) 430-19	
					STRAP,WEBBING (2) 430-44	
					TRAY ASSEMBLY,BIPOD(1) 430-30	
					WASHER,FLAT (12) 429-35	
					WASHER,FLAT (24) 429-37	
					WASHER,FLAT (24) 430-15	
					WASHER,FLAT (11) 430-23	
					WASHER,LOCK (6) 430-13	
					WASHER,LOCK (3) 430-41	

END OF FIGURE

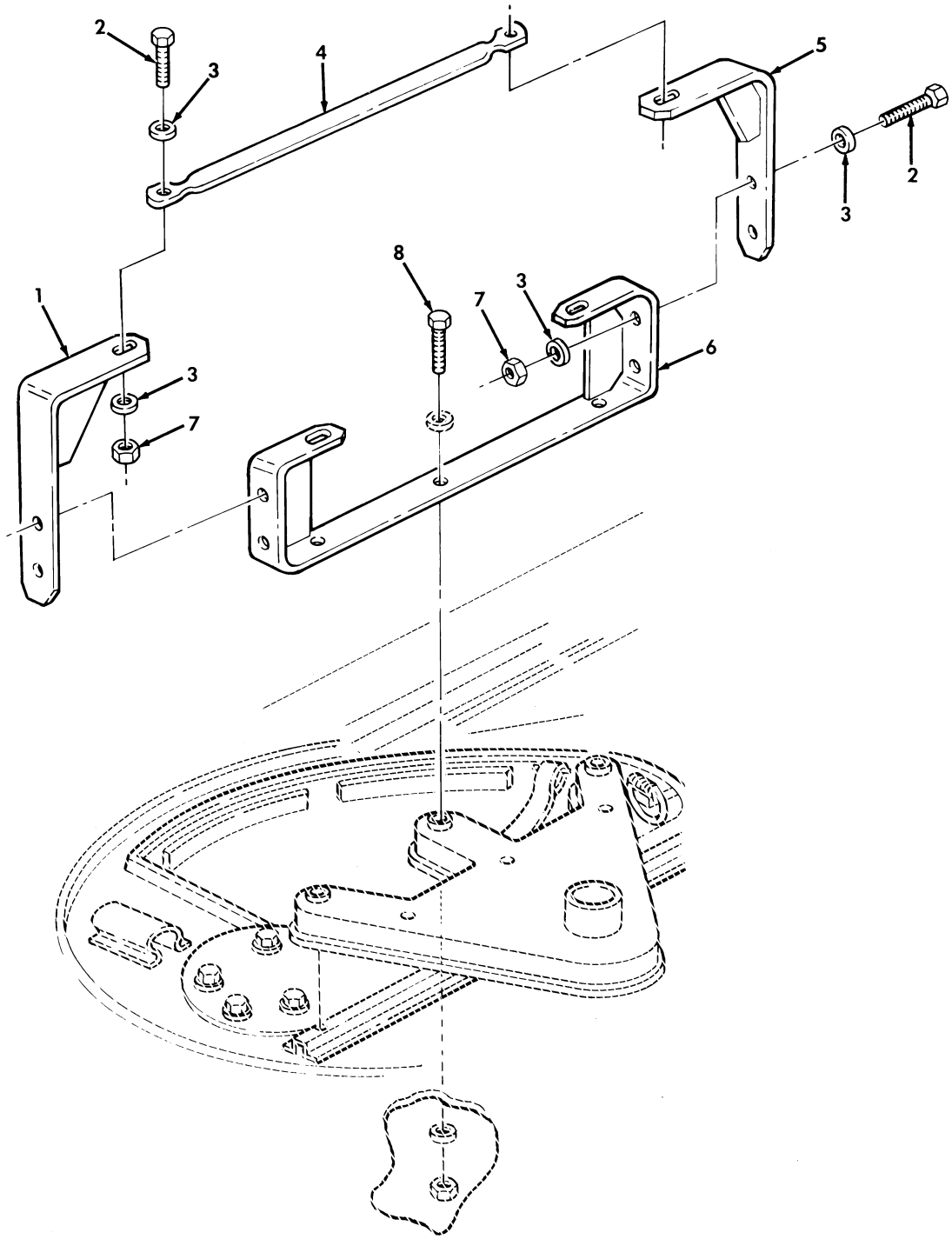

Figure 431. Traversing Bar Kit.

(1) ITEM NO	(2) SMR CODE	(3) NSN	(4) CAGEC	(5) PART NUMBER	(6) DESCRIPTION AND USABLE ON CODES(UOC)	(7) QTY
					GROUP 3307 SPECIAL PURPOSE KITS	
					FIG. 431 TRAVERSING BAR KIT	
1	PAOZZ	5340012958169	19207	12342044-1	BRACKET,ANGLE UPPER,L.H. PART OF KIT P/N 12342040..... UOC:A25,A26,B25,H25,H26	1
2	PAOZZ	5305000680511	80204	B1821BH038C125N	SCREW,CAP,HEXAGON H 3/8-16 X 1.25 PART OF KIT P/N 12342040..... UOC:A25,A26,B25,H25,H26	6
3	PAOZZ	5310000806004	96906	MS27183-14	WASHER,FLAT 3/8 PART OF KIT P/N 12342040..... UOC:A25,A26,B25,H25,H26	12
4	PAOZZ	3040013271426	19207	12342045	CONNECTING LINK,RIG PART OF KIT P/N 12342040..... UOC:A25,A26,B25,H25,H26	1
5	PAOZZ	5340012951088	19207	12342044-2	BRACKET,ANGLE UPPER R.H. PART OF KIT P/N 12342040..... UOC:A25,A26,B25,H25,H26	1
6	PAOZZ	5340013241076	19207	12342043	BRACKET,DOUBLE ANGL LOWER PART OF KIT P/N 12342040..... UOC:A25,A26,B25,H25,H26	1
7	PAOZZ	5310009359021	96906	MS51943-35	NUT,SELF-LOCKING,HE 3/8-16 PART OF KIT P/N 12342040..... UOC:A25,A26,B25,H25,H26	6
8	PAOZZ	5305013869052	80204	B1821BH038C600N	SCREW,CAP,HEXAGON H LOWER PART OF KIT P/N 12342040..... UOC:A25,A26,B25,H25,H26	3
KIT	PDOZZ	1005013216774	9C234	12342040	TRAVERSING MECHANIS..... UOC:A25,A26,B25,H25,H26	1
					BRACKET,ANGLE (1) 431-1	
					BRACKET,ANGLE (1) 431-5	
					BRACKET,DOUBLE ANGL(1) 431-6	
					CONNECTING LINK,RIG(1) 431-4	
					NUT,SELF-LOCKING,HE(6) 431-7	
					SCREW,CAP,HEXAGON H(3) 431-8	
					SCREW,CAP,HEXAGON H(6) 431-2	
					WASHER,FLAT (12) 431-3	

END OF FIGURE

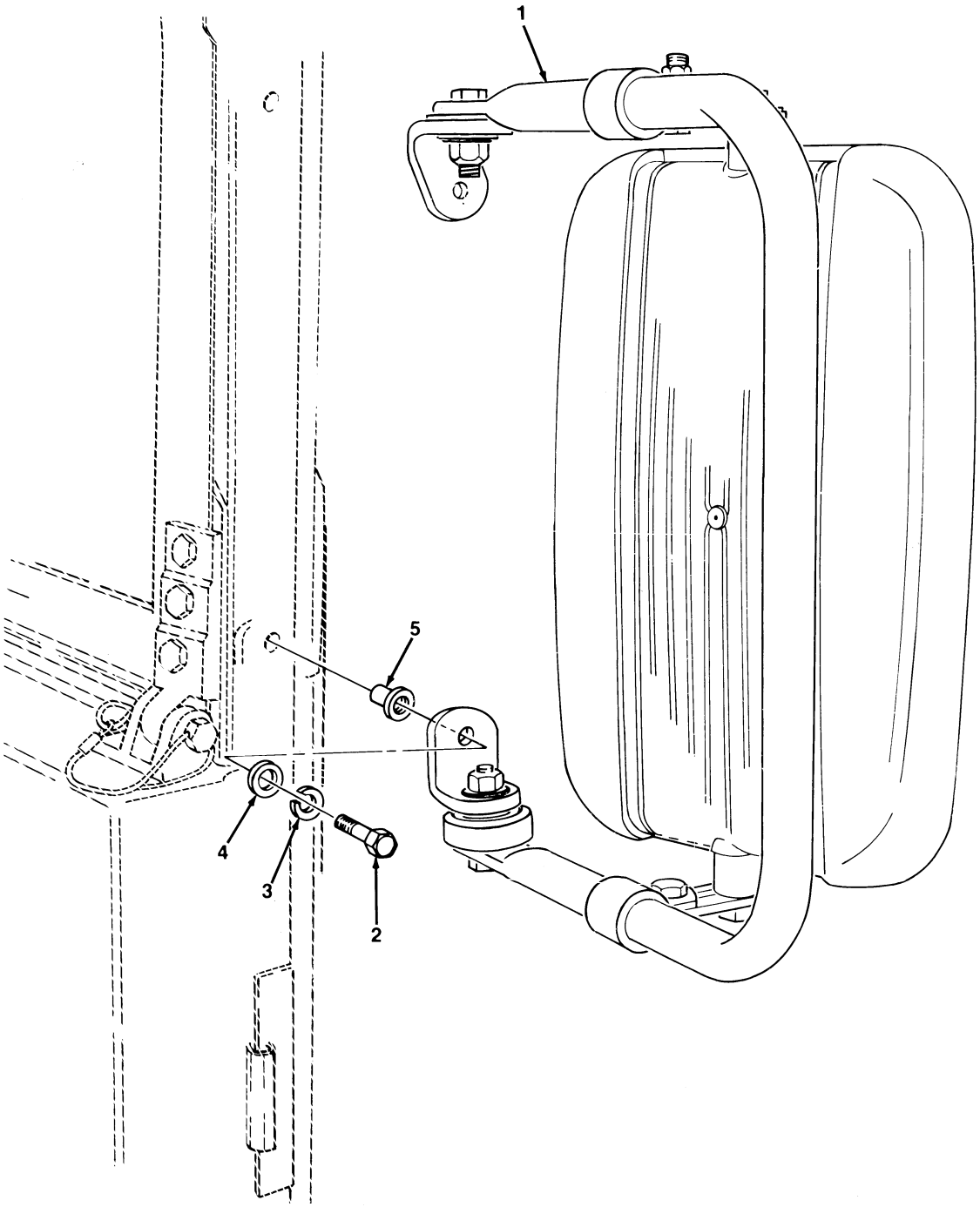

Figure 432. Rearview Mirror Mounting Kit.

(1) ITEM NO	(2) SMR CODE	(3) NSN	(4) CAGEC	(5) PART NUMBER	(6) DESCRIPTION AND USABLE ON CODES(UOC)	(7) QTY
					GROUP 3307 SPECIAL PURPOSE KITS	
					FIG. 432 REARVIEW MIRROR MOUNTING KIT	
1	PAOZZ	2540013149379	34623	12342130	MIRROR ASSEMBLY,REA REARVIEW,R.H. PART OF KIT P/N 5705704..... UOC:H11,H13,H14,H15,H16,H17,H18,H20, H21,H24,H25,H26,H27,H28,MMM	1
1	PAOZZ	2540013149380	34623	12342129	MIRROR ASSEMBLY,REA REARVIEW,L.H. PART OF KIT P/N 5705704..... UOC:H11,H13,H14,H15,H16,H17,H18,H20, H21,H24,H25,H26,H27,H28,MMM	1
2	PAOZZ	5306002264829	80204	B1821BH031C125N	BOLT,MACHINE 5/16-18 X 1.25 PART OF KIT P/N 5705704..... UOC:H11,H13,H14,H15,H16,H17,H18,H20, H21,H24,H25,H26,H27,H28,MMM	4
3	PAOZZ	5310004079566	96906	MS35338-45	WASHER,LOCK 5/16 PART OF KIT P/N 5705704..... UOC:H11,H13,H14,H15,H16,H17,H18,H20, H21,H24,H25,H26,H27,H28,MMM	4
4	PAOZZ	5310000814219	96906	MS27183-12	WASHER,FLAT 5/16 PART OF KIT P/N 5705704..... UOC:H11,H13,H14,H15,H16,H17,H18,H20, H21,H24,H25,H26,H27,H28,MMM	4
5	PAOZZ	5310000802411	96906	MS27130-S43	NUT,PLAIN,BLIND RIV 5/16-18 PART OF KIT P/N 5705704..... UOC:H11,H13,H14,H15,H16,H17,H18,H20, H21,H24,H25,H26,H27,H28,MMM	4
KIT	PAOZZ	2540013022595	34623	5705704	MIRROR ASSEMBLY,REA USBL EFF 1 THRU 99,999..... UOC:H11,H13,H14,H15,H16,H17,H18,H20, H21,H24,H25,H26,H27,H28,MMM	1
					BOLT,MACHINE (4) 432-2	
					MIRROR ASSEMBLY,REA(1) 432-1	
					MIRROR ASSEMBLY,REA(1) 432-1	
					NUT,PLAIN,BLIND RIV(4) 432-5	
					WASHER,FLAT (4) 432-4	
					WASHER,LOCK (4) 432-3	

END OF FIGURE

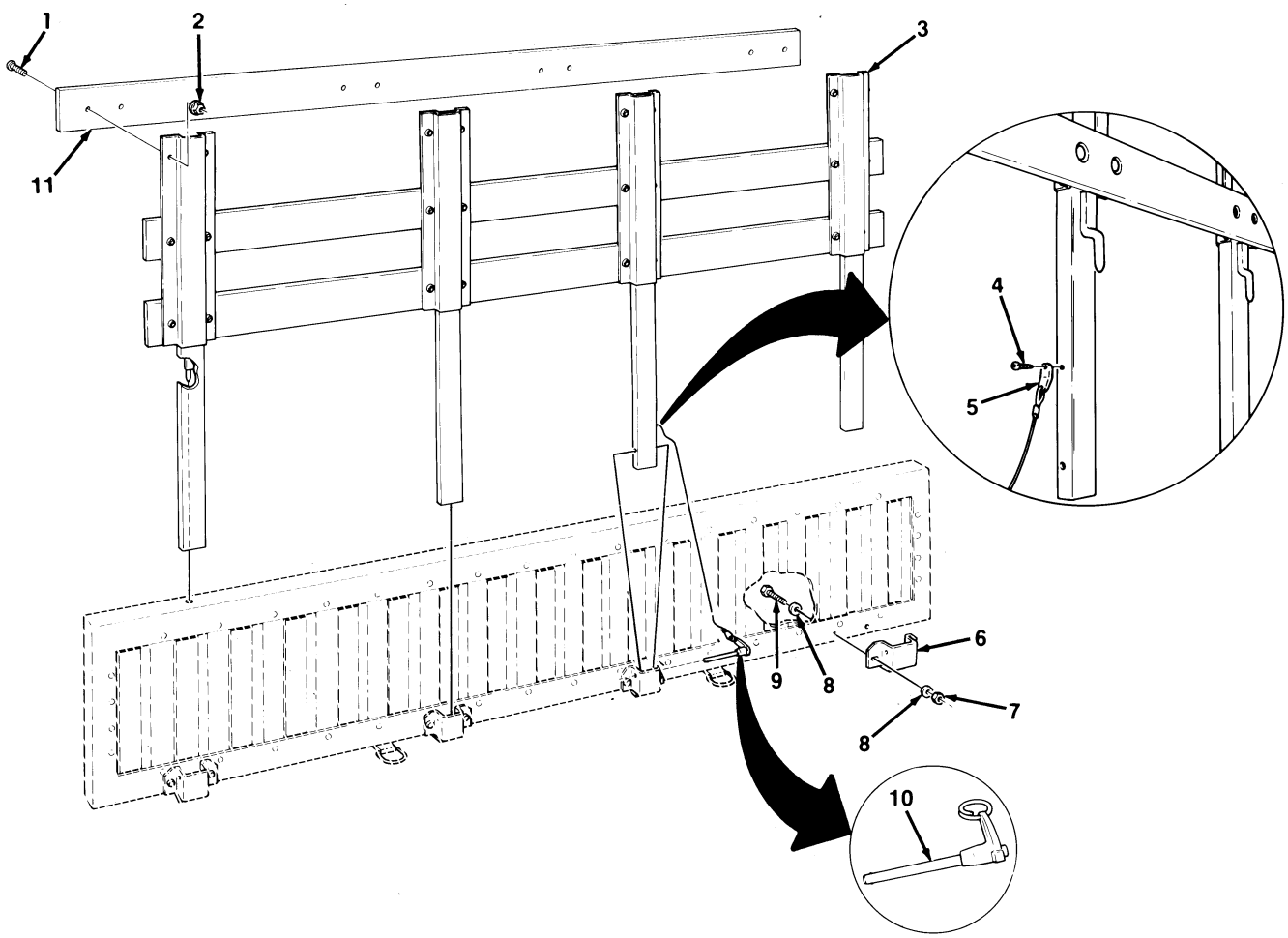

Figure 433. Cargo Barrier Extension Kit.

(1) ITEM NO	(2) SMR CODE	(3) NSN	(4) CAGEC	(5) PART NUMBER	(6) DESCRIPTION AND USABLE ON CODES(UOC)	(7) QTY
					GROUP 3307 SPECIAL PURPOSE KITS	
					FIG. 433 CARGO BARRIER EXTENSION KIT	
1	PAOZZ	5306009115005	80205	MS35751-42	BOLT,SQUARE NECK 5/16-18 X 1.25 PART OF KIT P/N 57K0218 PART OF KIT P/N 57K0222 PART OF KIT P/N 5705613. UOC:AVY,A13,A14,BVY,HVY,H13,H14,NNN	24
2	PAOZZ	5310009334310	24617	271184	NUT,PLAIN,ASSEMBLED 5/16-18 PART OF KIT P/N 57K0218 PART OF KIT P/N 57K0222 PART OF KIT P/N 5705613..... UOC:AVY,A13,A14,BVY,HVY,H13,H14,NNN	24
3	PAOZZ	5340013183366	19207	12342284	BRACKET,MOUNTING GREEN(PAINT TAN OR WHITE IF REQUIRED)PART OF KIT P/N 57K0218 PART OF KIT P/N 57K0222 PART OF KIT P/N 5705613..... UOC:AVY,A13,A14,BVY,HVY,H13,H14,NNN	4
4	PAOZZ	5305004324170	96906	MS51861-35	SCREW,TAPPING #8-18 X .50 PART OF KIT P/N 57K0218 PART OF KIT P/N 57K0222 PART OF KIT P/N 5705613..... UOC:AVY,A13,A14,BVY,HVY,H13,H14,NNN	1
5	PAOZZ	4010010721167	84256	LT1504-C6-08	WIRE ROPE ASSEMBLY, PART OF KIT P/N 57K0218 PART OF KIT P/N 57K0222 PART OF KIT P/N 5705613..... UOC:AVY,A13,A14,BVY,HVY,H13,H14,NNN	1
6	PAOZZ	5340013252891	19207	12342281	STRAP,RETAINING GREEN(PAINT TAN OR WHITE IF REQUIRED)PART OF KIT P/N 57K0218 PART OF KIT P/N 57K0222 PART OF KIT P/N 5705613..... UOC:AVY,A13,A14,BVY,HVY,H13,H14,NNN	4
7	PAOZZ	5310002416658	96906	MS51943-34	NUT,SELF-LOCKING,HE 5/16-24 PART OF KIT P/N 57K0218 PART OF KIT P/N 57K0222 PART OF KIT P/N 5705613..... UOC:AVY,A13,A14,BVY,HVY,H13,H14,NNN	8
8	PAOZZ	5310000814219	96906	MS27183-12	WASHER,FLAT 5/16 PART OF KIT P/N 57K0218 PART OF KIT P/N 57K0222 PART OF KIT P/N 5705613..... UOC:AVY,A13,A14,BVY,HVY,H13,H14,NNN	16
9	PAOZZ	5306000501238	80204	B1821BH031F075N	BOLT,MACHINE 5/16-24 X 3/4 PART OF KIT P/N 57K0218 PART OF KIT P/N 57K0222 PART OF KIT P/N 5705613..... UOC:AVY,A13,A14,BVY,HVY,H13,H14,NNN	8
10	PAOZZ	5315003769034	96906	MS17986-C423	PIN,QUICK RELEASE PART OF KIT P/N 57K0218 PART OF KIT P/N 57K0222 PART OF KIT P/N 5705613..... UOC:AVY,A13,A14,BVY,HVY,H13,H14,NNN	1
11	PAOZZ	5340013180212	19207	12342285	BRACKET,MOUNTING GREEN(PAINT TAN OR WHITE IF REQUIRED)PART OF KIT P/N 57K0218 PART OF KIT P/N 57K0222 PART OF KIT P/N 5705613..... UOC:AVY,A13,A14,BVY,HVY,H13,H14,NNN	3
KIT	PAOZZ	2590013374071	19207	5705613	MODIFICATION KIT,VE CARGO BARRIER EXTENSION,GREEN.....	1

(1) ITEM NO	(2) SMR CODE	(3) NSN	(4) CAGEC	(5) PART NUMBER	(6) DESCRIPTION AND USABLE ON CODES(UOC)	(7) QTY
					UOC:AVY,A13,A14,BVY,HVY,H13,H14,NNN	
					BOLT,MACHINE (8) 433-9	
					BOLT,SQUARE NECK (24) 433-1	
					BRACKET,MOUNTING (4) 433-3	
					BRACKET,MOUNTING (3) 433-11	
					NUT,PLAIN ASSEMBLED(24) 433-2	
					NUT,SELF-LOCKING,HE(8) 433-7	
					PIN,QUICK RELEASE (1) 433-10	
					SCREW,TAPPING (1) 433-4	
					STRAP,RETAINING (4) 433-6	
					WASHER,FLAT (16) 433-8	
					WIRE ROPE ASSEMBLY (1) 433-5	
KIT	PDOZZ	2590013424918	19207	57K0218	MODIFICATION KIT,VE CARGO BARRIER EXTENSION,TAN.....	1
					UOC:AVY,A13,A14,BVY,HVY,H13,H14,NNN	
					BOLT,MACHINE (8) 433-9	
					BOLT,SQUARE NECK (24) 433-1	
					BRACKET,MOUNTING (4) 433-3	
					BRACKET,MOUNTING (3) 433-11	
					NUT,PLAIN ASSEMBLED(24) 433-2	
					NUT,SELF-LOCKING,HE(8) 433-7	
					PIN,QUICK RELEASE (1) 433-10	
					SCREW,TAPPING (1) 433-4	
					STRAP,RETAINING (4) 433-6	
					WASHER,FLAT (16) 433-8	
					WIRE ROPE ASSEMBLY (1) 433-5	
KIT	PDOZZ		19207	57K0222	MODIFICATION KIT,VE CARGO BARRIER EXTENSION,WHITE.....	1
					UOC:AVY,A13,A14,BVY,HVY,H13,H14,NNN	
					BOLT,MACHINE (8) 433-9	
					BOLT,SQUARE NECK (24) 433-1	
					BRACKET,MOUNTING (4) 433-3	
					BRACKET,MOUNTING (3) 433-11	
					NUT,PLAIN ASSEMBLED(24) 433-2	
					NUT,SELF-LOCKING,HE(8) 433-7	
					PIN,QUICK RELEASE (1) 433-10	
					SCREW,TAPPING (1) 433-4	
					STRAP,RETAINING (4) 433-6	
					WASHER,FLAT (16) 433-8	
					WIRE ROPE ASSEMBLY (1) 433-5	

END OF FIGURE

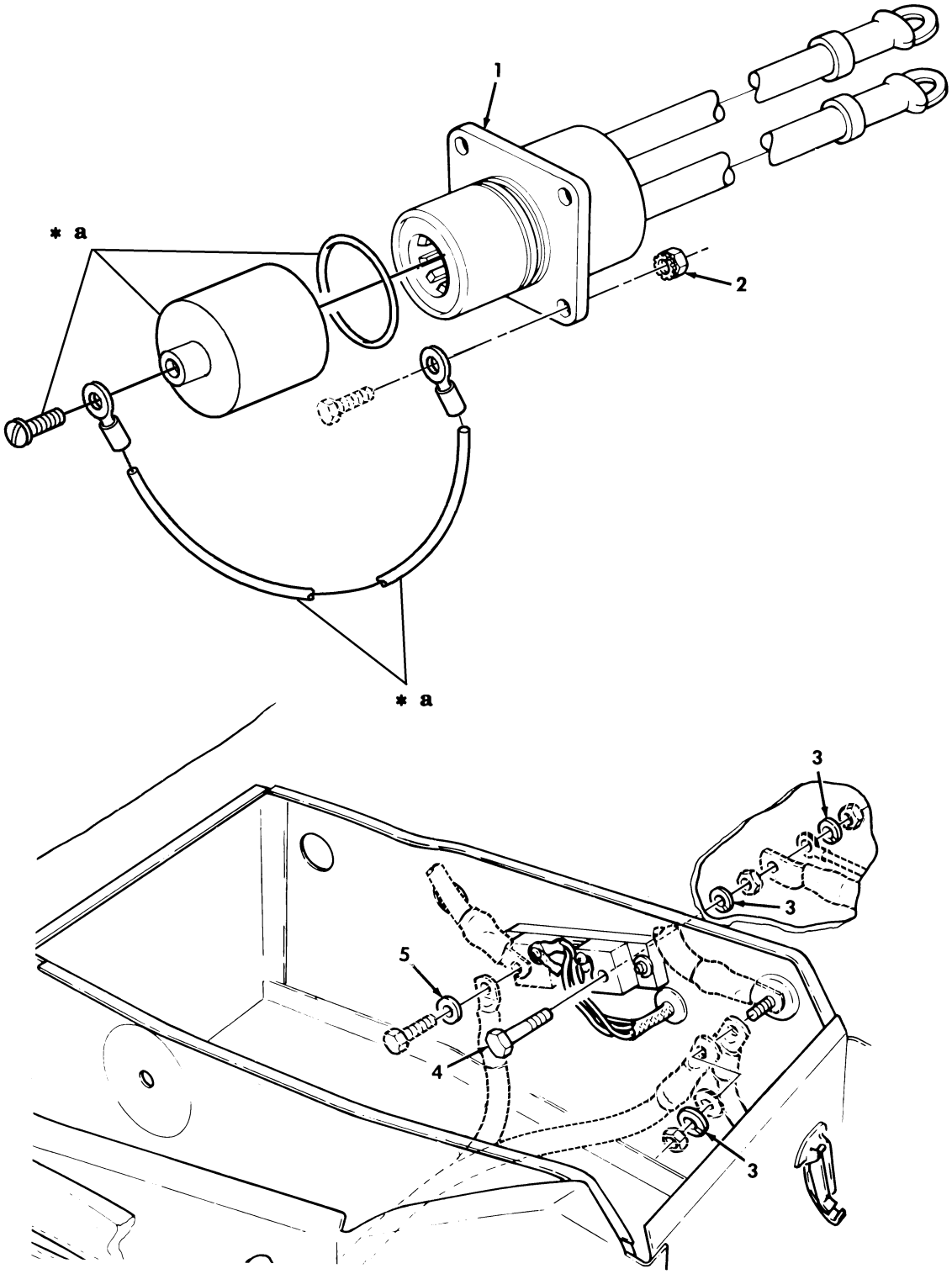

* a PART OF FIGURE 72

Figure 434. Slave Receptacle Kit.

(1) ITEM NO	(2) SMR CODE	(3) NSN	(4) CAGEC	(5) PART NUMBER	(6) DESCRIPTION AND USABLE ON CODES(UOC)	(7) QTY
					GROUP 3307 SPECIAL PURPOSE KITS	
					FIG. 434 SLAVE RECEPTACLE KIT	
1	PAOZZ	6150013175853	19207	12342303	CABLE ASSEMBLY,POWE USBL EFF 1 THRU 99,999 PART OF KIT P/N 5705623..... UOC:H13,H14,H15,H16,H17,H18,H20,H21, H25,H26,H28	1
2	PAOZZ	5310012041039	7X677	272474	NUT,PLAIN,ASSEMBLED PART OF KIT P/N 5705623..... UOC:H13,H14,H15,H16,H17,H18,H20,H21, H25,H26,H28	4
3	PAOZZ	5310005845272	31007	10332B	WASHER,LOCK PART OF KIT P/N 5705623. UOC:H13,H14,H15,H16,H17,H18,H20,H21, H25,H26,H28	3
4	PAOZZ	5305013158649	19207	12342338	SCREW,CAP,HEXAGON H 1/2-13 X 3.00, USBL EFF 1 THRU 99,999 PART OF KIT P/N 5705623..... UOC:H13,H14,H15,H16,H17,H18,H20,H21, H25,H26,H28	1
5	PAOZZ	5310001848971	96906	MS35338-103	WASHER,LOCK USBL EFF 1 THRU 99,999 PART OF KIT P/N 5705623..... UOC:H13,H14,H15,H16,H17,H18,H20,H21, H25,H26,H28	1
KIT	PDOZZ	2920013788035	19207	5705623	PARTS KIT,TERMINAL, USBL EFF 1 THRU 99,999..... UOC:H13,H14,H15,H16,H17,H18,H20,H21, H25,H26,H28	1
					CABLE ASSEMBLY,POWE(1) 434-1	
					NUT,PLAIN,ASSEMBLED(4) 434-2	
					SCREW,CAP,HEXAGON H(1) 434-4	
					WASHER,LOCK (3) 434-3	
					WASHER,LOCK (1) 434-5	

END OF FIGURE

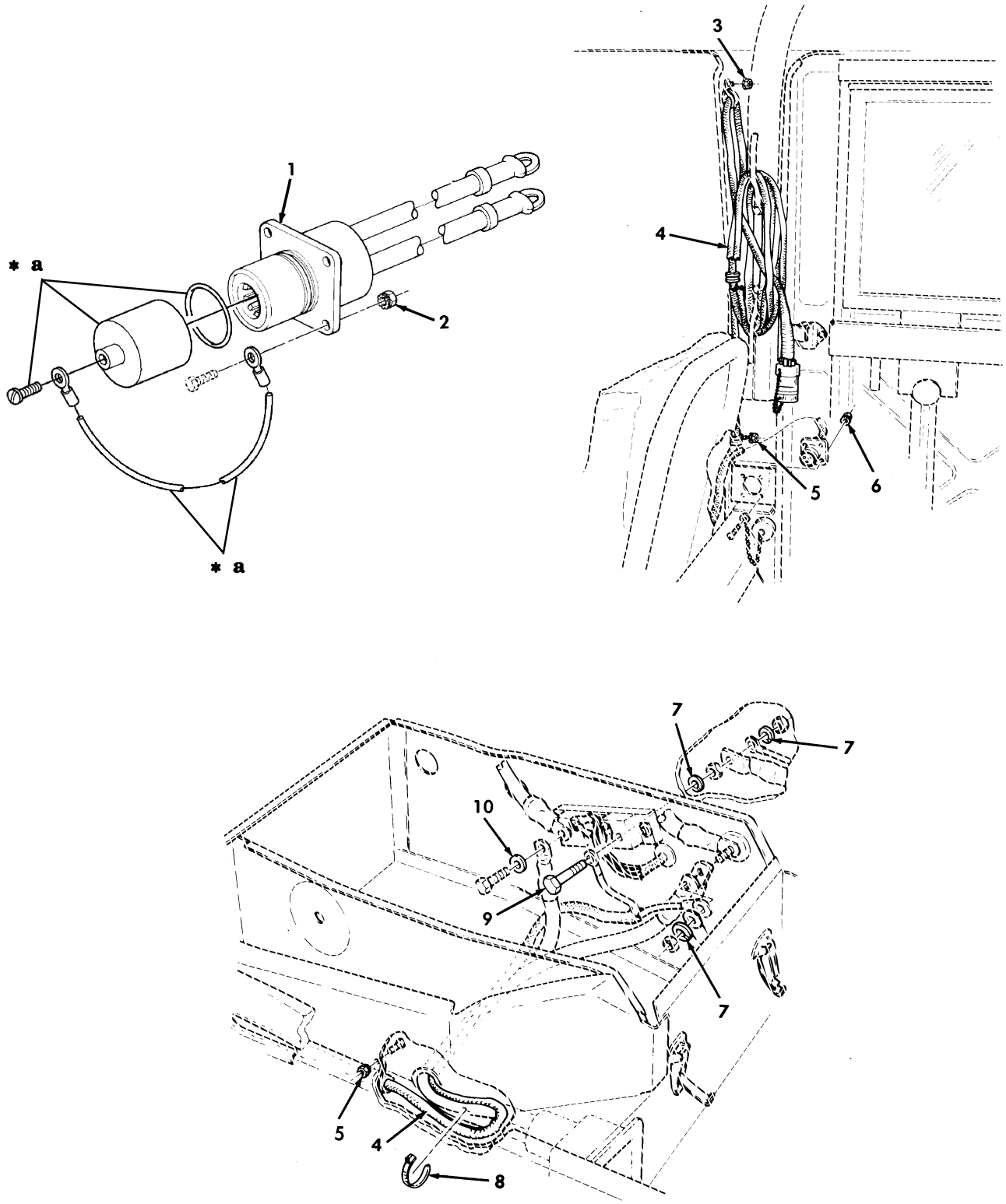

* a PART OF FIGURE 72

Figure 435. Slave Receptacle with Power Cable Assembly Kit.

(1) ITEM NO	(2) SMR CODE	(3) NSN	(4) CAGEC	(5) PART NUMBER	(6) DESCRIPTION AND USABLE ON CODES(UOC)	(7) QTY
					GROUP 3307 SPECIAL PURPOSE KITS	
					FIG. 435 SLAVE RECEPTACLE WITH POWER CABLE ASSEMBLY KIT	
1	PFOZZ	6150013175853	19207	12342303	CABLE ASSEMBLY,POWE USBL EFF 1 THRU 99,999 PART OF KIT P/N 5705624. UOC:H11,H24,H27,MMM	1
2	PAOZZ	5310012041039	7X677	272474	NUT,PLAIN,ASSEMBLED 7/16-24,USBL EFF 1 THRU 99,999 PART OF KIT P/N 5705624..... UOC:H11,H24,H27,MMM	4
3	PAOZZ	5310009334310	24617	271184	NUT,PLAIN,ASSEMBLED 5/16-18,USBL EFF 1 THRU 99,999 PART OF KIT P/N 5705624..... UOC:H11,H24,H27,MMM	4
4	PFOZZ	5995013390190	19207	12340655-1	WIRING HARNESS,BRAN USBL EFF 1 THRU 99,999 PART OF KIT P/N 5705624. UOC:H11,H24,H27,MMM	1
5	PAOZZ	5310010695243	72582	271163	NUT,PLAIN,ASSEMBLED 8-32,USBL EFF 1 THRU 99,999 PART OF KIT P/N 5705624..... UOC:H11,H24,H27,MMM	4
6	PAOZZ	5310001249265	72582	271169	NUT,PLAIN ,ASSEMBLED #10-32,USBL EFF 1 THRU 99,999,PART OF KIT P/N 5705624..... UOC:H11,H24,H27,MMM	4
7	PAOZZ	5310005845272	31007	10332B	WASHER,LOCK 1/2,USBL EFF 1 THRU 99, 999 PART OF KIT P/N 5705624..... UOC:H11,H24,H27,MMM	3
8	PAOZZ	5975004515001	96906	MS3367-3-9	STRAP,TIEDOWN,ELECT USBL EFF 1 THRU 99,999 PART OF KIT P/N 5705624. UOC:H11,H24,H27,MMM	1
9	PAOZZ	5305013158649	19207	12342338	SCREW,CAP,HEXAGON H 1/2-13 X 3.00, USBL EFF 1 THRU 99,999 PART OF KIT P/N 5705624..... UOC:H11,H24,H27,MMM	1
10	PAOZZ	5310001848971	96906	MS35338-103	WASHER,LOCK 3/8,USBL EFF 1 THRU 99, 999 PART OF KIT P/N 5705624..... UOC:H11,H24,H27,MMM	1
KIT	PAOZZ	5975014173267	19207	5705624	ELECTRICAL KIT,SHOP SLAVE RECEPTACLE WITH POWER CABLE ASSEMBLY,USBL EFF 1 THRU 99,999..... UOC:H11,H24,H27,MMM	1
					CABLE ASSEMBLY,POWE(1) 435-1	
					NUT,PLAIN,ASSEMBLED(4) 435-2	
					NUT,PLAIN,ASSEMBLED(4) 435-3	
					NUT,PLAIN,ASSEMBLED(4) 435-5	
					NUT,PLAIN,ASSEMBLED(4) 435-6	
					SCREW,CAP,HEXAGON H(1) 435-9	
					STRAP,TIEDOWN,ELECT(1) 435-8	
					WASHER,LOCK (3) 435-7	
					WASHER,LOCK (1) 435-10	

(1) ITEM NO	(2) SMR CODE	(3) NSN	(4) CAGEC	(5) PART NUMBER	(6) DESCRIPTION AND USABLE ON CODES(UOC)	(7) QTY
					WIRING HARNESS,BRAN(1) 435-4	

END OF FIGURE

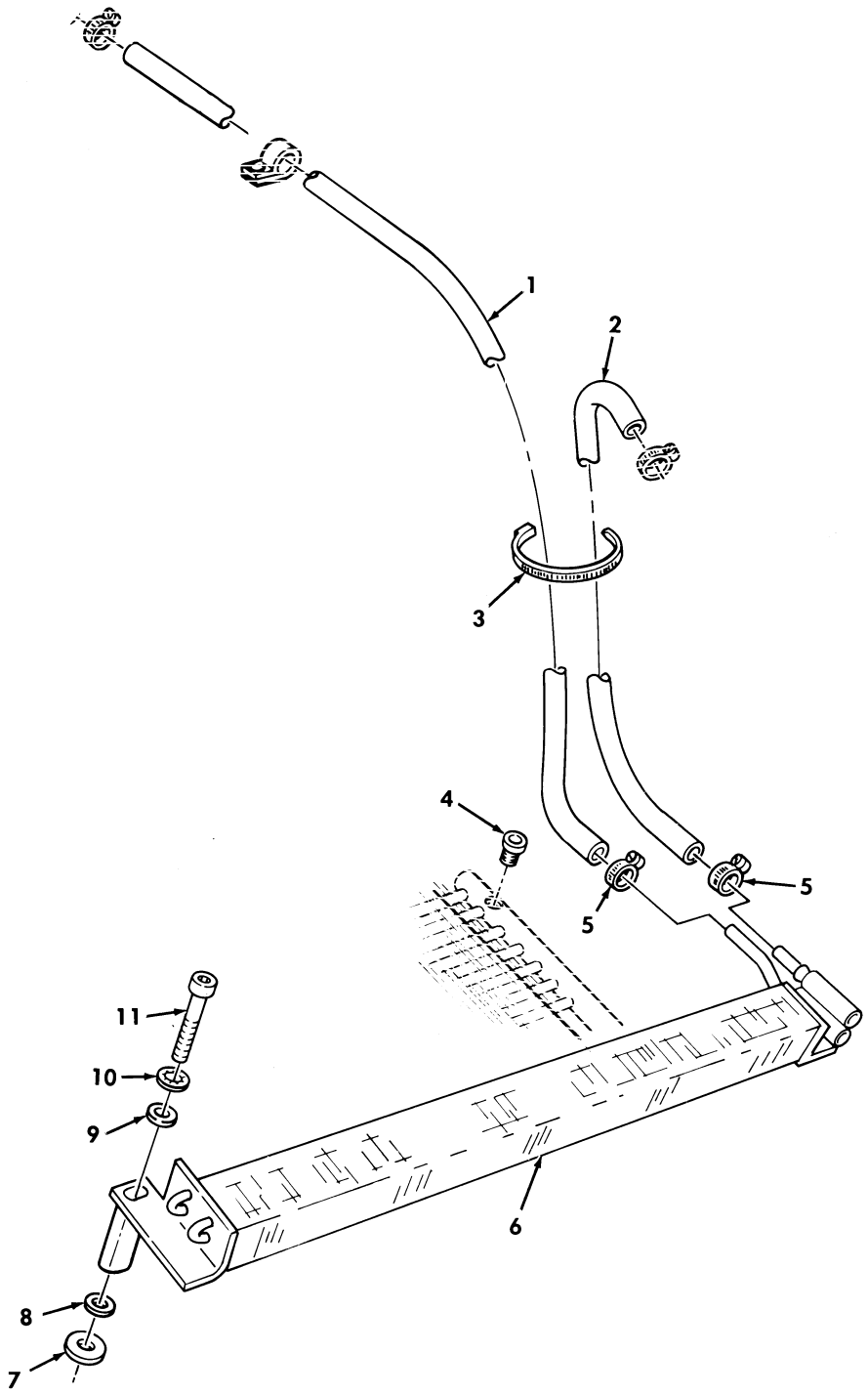

Figure 436. Power Steering Oil Cooler Kit.

(1) ITEM NO	(2) SMR CODE	(3) NSN	(4) CAGEC	(5) PART NUMBER	(6) DESCRIPTION AND USABLE ON CODES(UOC)	(7) QTY
					GROUP 3307 SPECIAL PURPOSE KITS	
					FIG. 436 POWER STEERING OIL COOLER KIT	
1	MOOZZ		19207	12338330-6	HOSE,NONMETALLIC MAKE FROM HOSE,P/N 6490610019,29 INCHES LONG,USBL EFF 1 THRU 99,999 PART OF KIT P/N 5705612. UOC:H11,H13,H14,H15,H16,H17,H18,H20, H21,H24,H25,H26,H27,H28,MMM	1
2	MOOZZ		19207	12338330-7	HOSE,NONMETALLIC MAKE FROM HOSE,P/N 6490610019,45 INCHES LONG,USBL EFF 1 THRU 99,999 PART OF KIT P/N 5705612..... UOC:H11,H13,H14,H15,H16,H17,H18,H20, H21,H24,H25,H26,H27,H28,MMM	1
3	PAOZZ	5975009856630	96906	MS3367-3-0	STRAP,TIEDOWN,ELECT USBL EFF 1 THRU 99,999 PART OF KIT P/N 5705612. UOC:H11,H13,H14,H15,H16,H17,H18,H20, H21,H24,H25,H26,H27,H28,MMM	1
4	PAOZZ	4730009541281	81348	WW-P-471ACABCB	PLUG,PIPE USBL EFF 1 THRU 99,999 PART OF KIT P/N 5705612..... UOC:H11,H13,H14,H15,H16,H17,H18,H20, H21,H24,H25,H26,H27,H28,MMM	1
5	PAOZZ	4730008776298	46717	L-3604-13	CLAMP,HOSE USBL EFF 1 THRU 99,999 PART OF KIT P/N 5705612..... UOC:H11,H13,H14,H15,H16,H17,H18,H20, H21,H24,H25,H26,H27,H28,MMM	2
6	PAOZZ	2520013162630	34623	12342142	COOLER,FLUID,TRANSM USBL EFF 1 THRU 99,999 PART OF KIT P/N 5705612. UOC:H11,H13,H14,H15,H16,H17,H18,H20, H21,H24,H25,H26,H27,H28,MMM	1
7	PAOZZ	5310011857214	19207	12339052	WASHER,FLAT 5/16,USBL EFF 1 THRU 99,999 PART OF KIT P/N 5705612..... UOC:H11,H13,H14,H15,H16,H17,H18,H20, H21,H24,H25,H26,H27,H28,MMM	2
8	PAOZZ	5310000877493	96906	MS27183-13	WASHER,FLAT 5/16,USBL EFF 1 THRU 99,999 PART OF KIT P/N 5705612..... UOC:H11,H13,H14,H15,H16,H17,H18,H20, H21,H24,H25,H26,H27,H28,MMM	2
9	PAOZZ	5310000814219	96906	MS27183-12	WASHER,FLAT 5/16,USBL EFF 1 THRU 99,999 PART OF KIT P/N 5705612..... UOC:H11,H13,H14,H15,H16,H17,H18,H20, H21,H24,H25,H26,H27,H28,MMM	2
10	PAOZZ	5310001670721	96906	MS35333-41	WASHER,LOCK 5/16,USBL EFF 1 THRU 99,999 PART OF KIT P/N 5705612..... UOC:H11,H13,H14,H15,H16,H17,H18,H20, H21,H24,H25,H26,H27,H28,MMM	2
11	PAOZZ	5305009226143	80205	MS16995-72	SCREW,CAP,SOCKET HE 5/16-18 X 2-1/2,USBL EFF 1 THRU 99,999 PART OF KIT P/N 5705612..... UOC:H11,H13,H14,H15,H16,H17,H18,H20, H21,H24,H25,H26,H27,H28,MMM	2

(1) ITEM NO	(2) SMR CODE	(3) NSN	(4) CAGEC	(5) PART NUMBER	(6) DESCRIPTION AND USABLE ON CODES(UOC)	(7) QTY
KIT	PDOZZ	2530013214497	19207	5705612	PARTS KIT,POWER STE ,POWER STEERING OIL COOLER USBL EFF 1 THRU 99,999.....	1
					UOC:H11,H13,H14,H15,H16,H17,H18,H20, H21,H24,H25,H26,H27,H28,MMM	
					CLAMP,HOSE (2) 436-5	
					COOLER,FLUID,TRANSM(1) 436-6	
					HOSE,NONMETALLIC (1) 436-1	
					HOSE,NONMETALLIC (1) 436-2	
					PLUG,PIPE (1) 436-4	
					SCREW,CAP,SOCKET HE(2) 436-11	
					STRAP,TIEDOWN,ELECT(1) 436-3	
					WASHER,FLAT (2) 436-7	
					WASHER,FLAT (2) 436-8	
					WASHER,FLAT (2) 436-9	
					WASHER,LOCK (2) 436-10	

END OF FIGURE

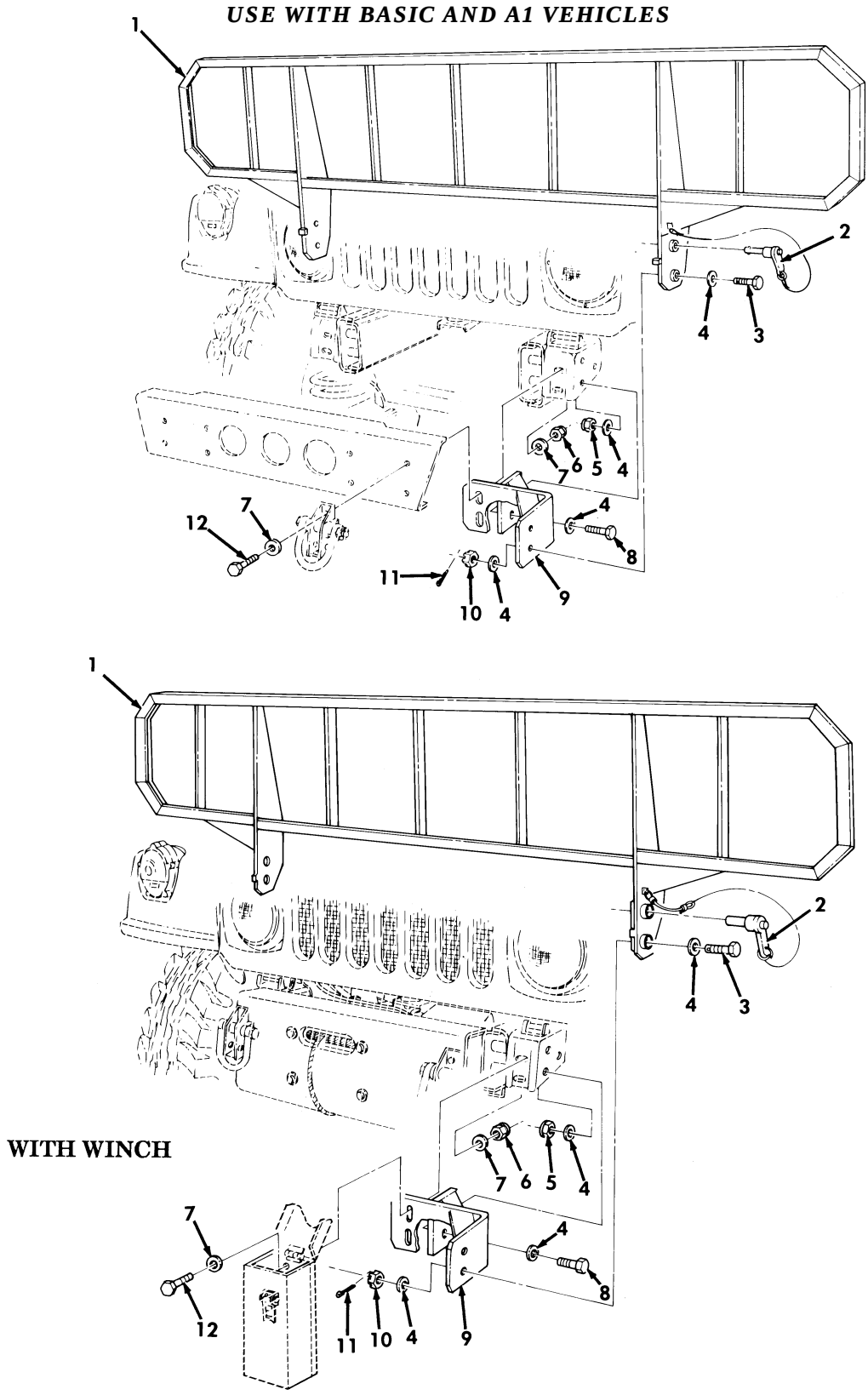

Figure 437. Brushguard Kit (Basic and A1 Series).

(1) ITEM NO	(2) SMR CODE	(3) NSN	(4) CAGEC	(5) PART NUMBER	(6) DESCRIPTION AND USABLE ON CODES(UOC)	(7) QTY
					GROUP 3307 SPECIAL PURPOSE KITS	
					FIG. 437 BRUSHGUARD KIT (BASIC AND A1 SERIES)	
1	KFOZZ		19207	12342412	BRUSHGUARD ASSEMBLY PART OF KIT P/N 57K0106..... UOC:AVY,A11,A13,A14,A15,A20,A24,A25, A26,A27,B16,B17,B18,HVY,H11,H13,H14, H15,H16,H17,H18,H20,H21,H24,H25,H26, H27,H28,MMM	1
2	PAOZZ	5315012490555	96906	MS17986-C1013	PIN,QUICK RELEASE PART OF KIT P/N 57K0106..... UOC:AVY,A11,A13,A14,A15,A20,A24,A25, A26,A27,B16,B17,B18,HVY,H11,H13,H14, H15,H16,H17,H18,H20,H21,H24,H25,H26, H27,H28,MMM	2
3	PAOZZ	5305013316284	96906	MS51108-139	SCREW,CAP,HEXAGON H 5/8-18 X 2.00 PART OF KIT P/N 57K0106..... UOC:AVY,A11,A13,A14,A15,A20,A24,A25, A26,A27,B16,B17,B18,HVY,H11,H13,H14, H15,H16,H17,H18,H20,H21,H24,H25,H26, H27,H28,MMM	2
4	PAOZZ	5310008238803	96906	MS27183-21	WASHER,FLAT 5/8 PART OF KIT P/N 57K0106..... UOC:AVY,A11,A13,A14,A15,A20,A24,A25, A26,A27,B16,B17,B18,HVY,H11,H13,H14, H15,H16,H17,H18,H20,H21,H24,H25,H26, H27,H28,MMM	12
5	PAOZZ	5310001986691	7X677	9422306	NUT,SELF-LOCKING,HE 5/8-18 PART OF KIT P/N 57K0106..... UOC:AVY,A11,A13,A14,A15,A20,A24,A25, A26,A27,B16,B17,B18,HVY,H11,H13,H14, H15,H16,H17,H18,H20,H21,H24,H25,H26, H27,H28,MMM	4
6	PAOZZ	5310000103028	96906	MS35690-824	NUT,PLAIN,HEXAGON 1/2-20 PART OF KIT P/N 57K0106..... UOC:AVY,A11,A13,A14,A15,A20,A24,A25, A26,A27,B16,B17,B18,HVY,H11,H13,H14, H15,H16,H17,H18,H20,H21,H24,H25,H26, H27,H28,MMM	4
7	PAOZZ	5310011211703	06032	2310-0143-001	WASHER,FLAT 1/2 PART OF KIT P/N 57K0106..... UOC:AVY,A11,A13,A14,A15,A20,A24,A25, A26,A27,B16,B17,B18,HVY,H11,H13,H14, H15,H16,H17,H18,H20,H21,H24,H25,H26, H27,H28,MMM	8
8	PAOZZ	5305007272283	96906	MS90726-162	SCREW,CAP,HEXAGON H 5/8-18 X 1 3/4 PART OF KIT P/N 57K0106..... UOC:AVY,A11,A13,A14,A15,A20,A24,A25, A26,A27,B16,B17,B18,HVY,H11,H13,H14, H15,H16,H17,H18,H20,H21,H24,H25,H26, H27,H28,MMM	4

(1) ITEM NO	(2) SMR CODE	(3) NSN	(4) CAGEC	(5) PART NUMBER	(6) DESCRIPTION AND USABLE ON CODES(UOC)	(7) QTY
9	PFOZZ	5340013327516	19207	12342418	BRACKET,MOUNTING PART OF KIT P/N 57K0106..... UOC:AVY,A11,A13,A14,A15,A20,A24,A25, A26,A27,B16,B17,B18,HVY,H11,H13,H14, H15,H16,H17,H18,H20,H21,H24,H25,H26, H27,H28,MMM	1
10	PAOZZ	5310008507004	96906	MS35692-54	NUT,PLAIN,SLOTTED,H 5/8-18 PART OF KIT P/N 57K0106..... UOC:AVY,A11,A13,A14,A15,A20,A24,A25, A26,A27,B16,B17,B18,HVY,H11,H13,H14, H15,H16,H17,H18,H20,H21,H24,H25,H26, H27,H28,MMM	2
11	PAOZZ	5315002981481	80205	MS24665-357	PIN,COTTER 5/64 X 2.00 PART OF KIT P/N 57K0106..... UOC:AVY,A11,A13,A14,A15,A20,A24,A25, A26,A27,B16,B17,B18,HVY,H11,H13,H14, H15,H16,H17,H18,H20,H21,H24,H25,H26, H27,H28,MMM	2
12	PAOZZ	5305007195235	24617	9423995	SCREW,CAP,HEXAGON H 1/2-20 X 1 3/4, WITH WINCH PART OF KIT P/N 57K0106.. UOC:AVY,A11,A13,A14,A15,A20,A24,A25, A26,A27,B16,B17,B18,HVY,H11,H13,H14, H15,H16,H17,H18,H20,H21,H24,H25,H26, H27,H28,MMM	4
12	PAOZZ	5305007195239	96906	MS90727-116	SCREW,CAP,HEXAGON H 1/2-20 X 2 1/4, WITHOUT WINCH PART OF KIT P/N 57K0106..... UOC:AVY,A11,A13,A14,A15,A20,A24,A25, A26,A27,B16,B17,B18,HVY,H11,H13,H14, H15,H16,H17,H18,H20,H21,H24,H25,H26, H27,H28,MMM	4
KIT	PDOZZ	2590013282904	19207	57K0106	MODIFICATION KIT,VE BRUSHGUARD..... UOC:AVY,A11,A13,A14,A15,A20,A24,A25, A26,A27,B16,B17,B18,HVY,H11,H13,H14, H15,H16,H17,H18,H20,H21,H24,H25,H26, H27,H28,MMM	1
					BRACKET,MOUNTING (1) 437-9	
					BRUSHGUARD ASSEMBLY(1) 437-1	
					NUT,PLAIN,HEXAGON (4) 437-6	
					NUT,PLAIN,SLOTTED (2) 437-10	
					NUT,SELF-LOCKING,HE(4) 437-5	
					PIN,COTTER (2) 437-11	
					PIN,QUICK RELEASE (2) 437-2	
					SCREW,CAP,HEXAGON H(2) 437-3	
					SCREW,CAP,HEXAGON H(4) 437-12	
					SCREW,CAP,HEXAGON H(4) 437-12	
					SCREW,CAP,HEXAGON H(4) 437-8	
					WASHER,FLAT (12) 437-4	
					WASHER,FLAT (8) 437-7	

END OF FIGURE

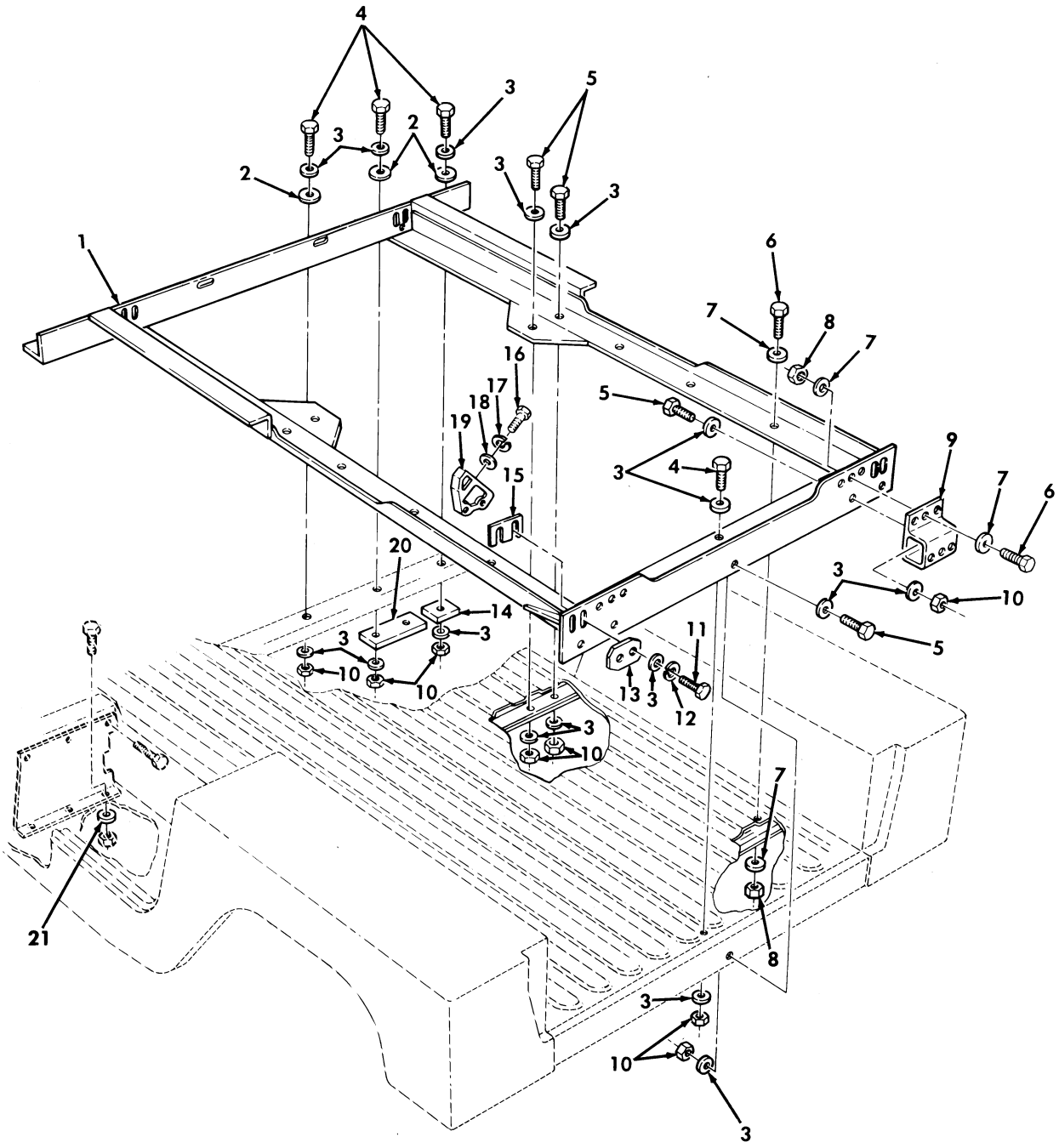

Figure 438. Kit, S250 Shelter Mounting Components.

(1) ITEM NO	(2) SMR CODE	(3) NSN	(4) CAGEC	(5) PART NUMBER	(6) DESCRIPTION AND USABLE ON CODES(UOC)	(7) QTY
					GROUP 3307 SPECIAL PURPOSE KITS	
					FIG. 438 KIT,S250 SHELTER MOUNTING COMPONENTS	
1	PAOZZ	2540012138057	19207	12339875	SUPPORT ASSEMBLY,MO PART OF KIT P/N 57K1639..... UOC:AVY,BVY,HVY,H21,H28,NNN	1
2	PAOZZ	5310012110698	19207	12339862-2	WASHER,FLAT PART OF KIT P/N 57K1369 UOC:AVY,BVY,HVY,H21,H28,NNN	8
3	PAOZZ	5310011211703	24617	2436165	WASHER,FLAT 1/2,PART OF KIT P/N 57K1639..... UOC:AVY,BVY,HVY,H21,H28,NNN	44
4	PAOZZ	5306013600926	24617	186680	BOLT,MACHINE 1/2-13 X 1.50,PART OF KIT P/N 57K1639..... UOC:AVY,BVY,HVY,H21,H28,NNN	9
5	PAOZZ	5306008440036	7X677	427566	BOLT,MACHINE 1/2-13 X 2.25,PART OF KIT P/N 57K1639..... UOC:AVY,BVY,HVY,H21,H28,NNN	9
6	PAOZZ	5305000680511	80204	B1821BH038C125N	SCREW,CAP,HEXAGON H 3/4-16 X 1.25, PART OF KIT P/N 57K1639..... UOC:AVY,BVY,HVY,H21,H28,NNN	10
7	PAOZZ	5310000806004	96906	MS27183-14	WASHER,FLAT 3/8,PART OF KIT P/N 57K1639..... UOC:AVY,BVY,HVY,H21,H28,NNN	20
8	PAOZZ	5310013611152	24617	9413266	NUT,SELF-LOCKING,HE 3/8-16,PART OF KIT P/N 57K1639..... UOC:AVY,BVY,HVY,H21,H28,NNN	10
9	PAOZZ	5340012144675	19207	12338972	BRACKET,MOUNTING PART OF KIT P/N 57K1639..... UOC:AVY,BVY,HVY,H21,H28,NNN	2
10	PAOZZ	5310004883889	96906	MS51943-39	NUT,SELF-LOCKING,HE 1/2-13,PART OF KIT P/N 57K1639..... UOC:AVY,BVY,HVY,H21,H28,NNN	18
11	PAOZZ	5306012761621	19207	12341980	BOLT,SELF-LOCKING 1/2-13 X 2.50, PART OF KIT P/N 57K1639..... UOC:AVY,BVY,HVY,H21,H28,NNN	8
12	PAOZZ	5310008347606	96906	MS35340-48	WASHER,LOCK 1/2,PART OF KIT P/N 57K1639..... UOC:AVY,BVY,HVY,H21,H28,NNN	8
13	PAOZZ	5365012772387	19207	12341968	SPACER,PLATE PART OF KIT P/N 57K1639 UOC:AVY,BVY,HVY,H21,H28,NNN	4
14	PAOZZ	2590012131629	19207	12339857	PLATE,REINFORCEMENT PART OF KIT P/N 57K1639..... UOC:AVY,BVY,HVY,H21,H28,NNN	2
15	PAOZZ	5365012658937	19207	12341967-1	SPACER,PLATE 0.09,PART OF KIT P/N 57K1639..... UOC:AVY,BVY,HVY,H21,H28,NNN	2
15	PAOZZ	5365012658938	19207	12341967-2	SPACER,PLATE 0.12,PART OF KIT P/N 57K1639..... UOC:AVY,BVY,HVY,H21,H28,NNN	2
15	PAOZZ	5365012658939	19207	12341967-3	SPACER,PLATE 0.03,PART OF KIT P/N 57K1639.....	2

(1) ITEM NO	(2) SMR CODE	(3) NSN	(4) CAGEC	(5) PART NUMBER	(6) DESCRIPTION AND USABLE ON CODES(UOC)	(7) QTY
					UOC:AVY,BVY,HVY,H21,H28,NNN	
16	PAOZZ	5306013601123	24617	9423557	BOLT,MACHINE 7/16-14 X 2.50,PART OF KIT P/N 57K1639.....	4
					UOC:AVY,BVY,HVY,H21,H28,NNN	
17	PAOZZ	5310006559370	96906	MS35340-47	WASHER,LOCK 29/64,PART OF KIT P/N 57K1639.....	4
					UOC:AVY,BVY,HVY,H21,H28,NNN	
18	PAOZZ	5310008094085	24617	2436164	WASHER,FLAT 7/16,PART OF KIT P/N 57K1639.....	4
					UOC:AVY,BVY,HVY,H21,H28,NNN	
19	PAOZZ	5340012658905	19207	12341969	BRACKET,MOUNTING PART OF KIT P/N 57K1639.....	4
					UOC:AVY,BVY,HVY,H21,H28,NNN	
20	PAOZZ	2590012131628	19207	12339856	PLATE,REINFORCEMENT B-BEAM,PART OF KIT P/N 57K1639.....	2
					UOC:AVY,BVY,HVY,H21,H28,NNN	
21	PAOZZ	5310000453296	96906	MS35338-43	WASHER,LOCK #10,PART OF KIT P/N 57K1639.....	6
					UOC:AVY,BVY,HVY,H21,H28,NNN	

END OF FIGURE

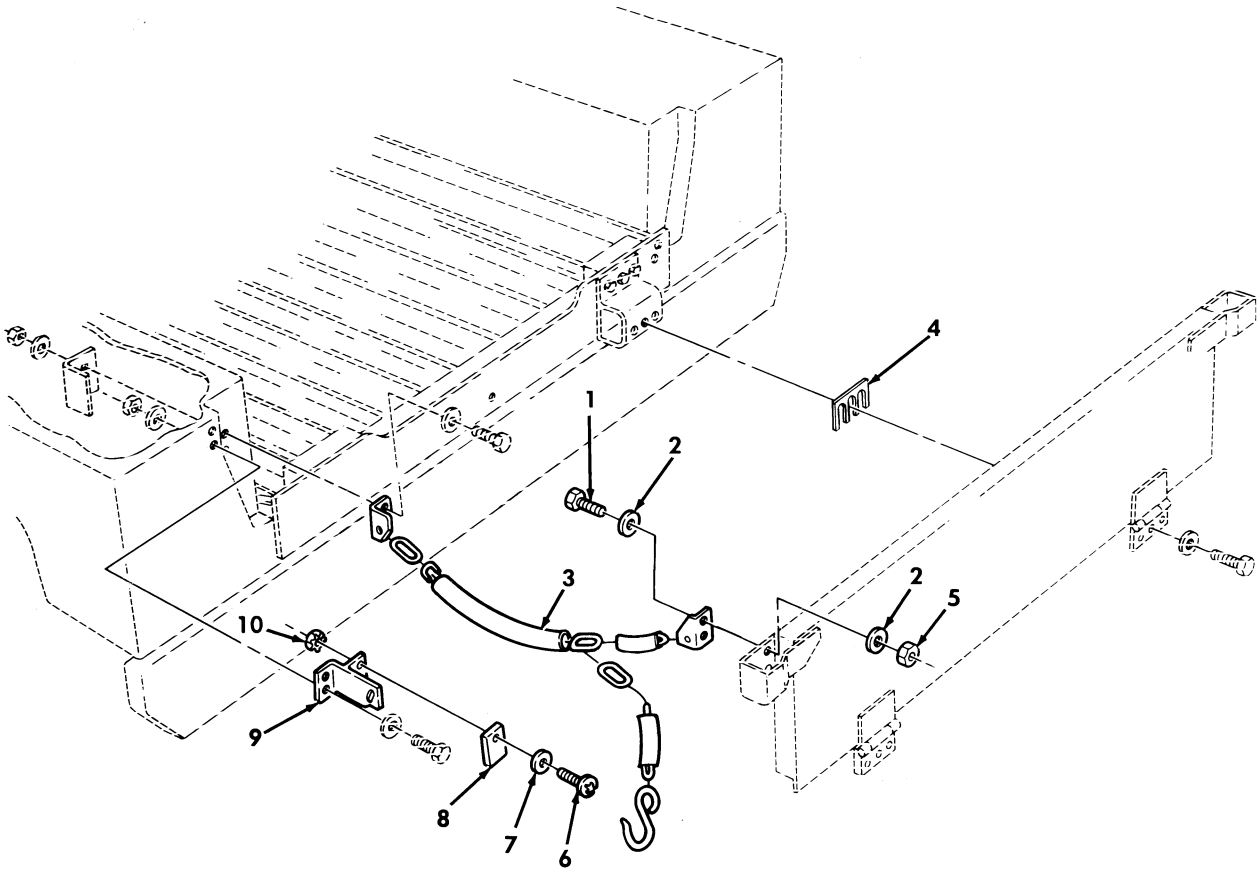

Figure 439. Kit, S250 Shelter Tailgate Mounting Components.

(1) ITEM NO	(2) SMR CODE	(3) NSN	(4) CAGEC	(5) PART NUMBER	(6) DESCRIPTION AND USABLE ON CODES(UOC)	(7) QTY
					GROUP 3307 SPECIAL PURPOSE KITS	
					FIG. 439 KIT,S250 SHELTER TAILGATE MOUNTING COMPONENTS	
1	PAOZZ	5306002264828	80204	B1821BH031C113N	BOLT,MACHINE 5/16-18 X 1.13,PART OF KIT P/N 57K1639..... UOC:AVY,BVY,HVY,NNN	4
2	PAOZZ	5310011191024	24617	2436162	WASHER,FLAT 5/16,PART OF KIT P/N 57K1639..... UOC:AVY,BVY,HVY,NNN	8
3	PAOZZ	4010012177086	34623	5583955	CHAIN ASSEMBLY,SING L.H.,PART OF KIT P/N 57K1639..... UOC:AVY,BVY,HVY,NNN	1
3	PAOZZ	4010012157466	19207	12339229-2	CHAIN ASSEMBLY,SING R.H.,PART OF KIT P/N 57K1639..... UOC:AVY,BVY,HVY,NNN	1
4	PAOZZ	5365012712491	19207	12340045	SPACER,PLATE PART OF KIT P/N 57K1639..... UOC:AVY,BVY,HVY,NNN	2
5	PAOZZ	5310011193668	24617	9422295	NUT,SELF-LOCKING,HE 5/16-18,PART OF KIT P/N 57K1639..... UOC:AVY,BVY,HVY,NNN	4
6	PAOZZ	5305000159947	24617	159947	SCREW,MACHINE #10-24 X 0.75,PART OF KIT P/N 57K1639..... UOC:AVY,BVY,HVY,NNN	4
7	PAOZZ	5310013611163	24617	9417373	WASHER,FLAT #10,PART OF KIT P/N 57K1639..... UOC:AVY,BVY,HVY,NNN	4
8	PAOZZ	5342012147809	19207	12338976	MOUNTING,RESILIENT PART OF KIT P/N 57K1639..... UOC:AVY,BVY,HVY,NNN	2
9	PAOZZ	2540013141121	34623	5590669	LATCH,DOOR,VEHICULA L.H.,PART OF KIT P/N 57K1639..... UOC:AVY,BVY,HVY,NNN	1
9	PAOZZ	2540012096875	19207	12338978-2	LATCH,DOOR,VEHICULA R.H.,PART OF KIT P/N 57K1639..... UOC:AVY,BVY,HVY,NNN	1
10	PAOZZ	5310012110691	24617	9422771	NUT,PLAIN,ASSEMBLED #10-24,PART OF KIT P/N 57K1639..... UOC:AVY,BVY,HVY,NNN	4
KIT	PAOZZ	2590013504482	19207	57K1639	MODIFICATION KIT S250 SHELTER MOUNTING..... UOC:AVY,BVY,HVY,NNN	1
					BOLT,MACHINE (9) 438-4	
					BOLT,MACHINE (9) 438-5	
					BOLT,MACHINE (4) 438-16	
					BOLT,MACHINE (4) 439-1	
					BOLT,SELF-LOCKING (8) 438-11	
					BRACKET,MOUNTING (2) 438-9	
					BRACKET,MOUNTING (4) 438-19	
					CHAIN ASSEMBLT,SING(1) 439-3	
					CHAIN ASSEMBLY,SING(1) 439-3	

(1) ITEM NO	(2) SMR CODE	(3) NSN	(4) CAGEC	(5) PART NUMBER	(6) DESCRIPTION AND USABLE ON CODES(UOC)	(7) QTY
					LATCH,DOOR,VEHICULA(1)	439-9
					LATCH,DOOR,VEHICULA(1)	439-9
					MOUNT,RESILIENT (2)	439-8
					NUT,PLAIN,ASSEMBLED(4)	439-10
					NUT,SELF-LOCKING (10)	438-8
					NUT,SELF-LOCKING (18)	438-10
					NUT,SELF-LOCKING (4)	439-5
					PLATE,REINFORCEMENT(2)	438-14
					PLATE,REINFORCEMENT(2)	438-20
					SCREW,MACHINE (10)	438-6
					SCREW,MACHINE (4)	439-6
					SPACER,PLATE (4)	438-13
					SPACER,PLATE (2)	438-15
					SPACER,PLATE (2)	438-15
					SPACER,PLATE (2)	438-15
					SPACER,PLATE (2)	439-4
					SUPPORT ASSEMBLY,MO(1)	438-1
					WASHER,FLAT (8)	438-2
					WASHER,FLAT (44)	438-3
					WASHER,FLAT (20)	438-7
					WASHER,FLAT (4)	438-18
					WASHER,FLAT (8)	439-2
					WASHER,FLAT (4)	439-7
					WASHER,LOCK (8)	438-12
					WASHER,LOCK (4)	438-17
					WASHER,LOCK (6)	438-21

END OF FIGURE

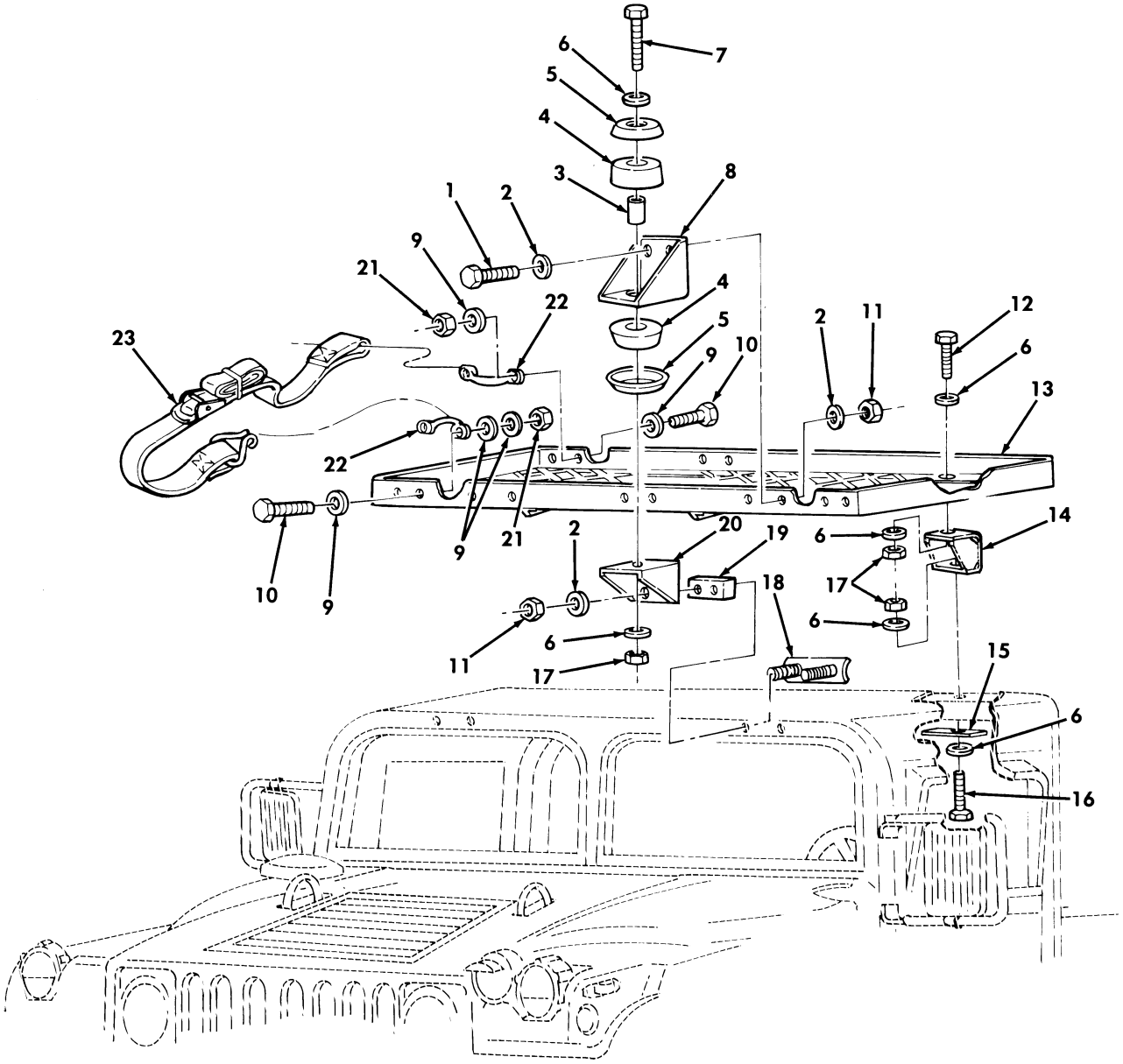

Figure 440. Kit, Camouflage Rack and Stowage Rack Assembly.

(1) ITEM NO	(2) SMR CODE	(3) NSN	(4) CAGEC	(5) PART NUMBER	(6) DESCRIPTION AND USABLE ON CODES(UOC)	(7) QTY
					GROUP 3307 SPECIAL PURPOSE KITS	
					FIG. 440 KIT,CAMOUFLAGE RACK AND STOWAGE RACK ASSEMBLY	
1	PAOZZ	5306012447882	29510	454869	BOLT,MACHINE 5/16-18 X .75,PART OF KIT P/N 57K1641..... UOC:HPM,KTV	4
2	PAOZZ	5310011191024	24617	2436162	WASHER,FLAT 5/16,PART OF KIT P/N 57K1641..... UOC:HPM,KTV	12
3	PAOZZ	5365012160364	19207	12338186-52	SPACER,SLEEVE PART OF KIT P/N 57K1641..... UOC:HPM,KTV	2
4	PAOZZ	5340012110838	19207	12339571	MOUNT,RESILIENT UPPER AND LOWER, PART OF KIT P/N 57K1641..... UOC:HPM,KTV	4
5	PAOZZ	2540011925949	19207	12339561	PLATE,SNUBBER,VEHIC PART OF KIT P/N 57K1641..... UOC:HPM,KTV	4
6	PAOZZ	5310000806004	96906	MS27183-14	WASHER,FLAT 3/8,PART OF KIT P/N 57K1641..... UOC:HPM,KTV	12
7	PAOZZ	5306013601129	24617	427583	BOLT,MACHINE 3/8-16 X 3.25,PART OF KIT P/N 57K1641..... UOC:HPM,KTV	2
8	PAOZZ	5340013599474	19207	12342559	BRACKET,MOUNTING UPPER FRONT,PART OF KIT P/N 57K1641..... UOC:HPM,KTV	2
9	PAOZZ	5310011023270	24617	2436161	WASHER,FLAT 1/4,PART OF KIT P/N 57K1641..... UOC:HPM,KTV	30
10	PAOZZ	5305000680502	96906	MS90725-6	SCREW,CAP,HEXAGON H 1/4-20 X .75, PART OF KIT P/N 57K1641..... UOC:HPM,KTV	12
11	PAOZZ	5310008140673	96906	MS51943-33	NUT,SELF-LOCKING,HE 5/16-18,PART OF KIT P/N 57K1641..... UOC:HPM,KTV	8
12	PAOZZ	5305009890830	72582	186678	SCREW,CAP,HEXAGON H 3/8-16 X 1.00, PART OF KIT P/N 57K1641..... UOC:HPM,KTV	2
13	PAOZZ	2540013875578	19207	12342558	RACK ASSEMBLY PART OF KIT P/N 57K1641..... UOC:HPM,KTV	1
14	PAOZZ	5340013602053	19207	12342561	BRACKET,MOUNTING REAR,PART OF KIT P/N 57K1641..... UOC:HPM,KTV	2
15	PAOZZ	5340013602021	19207	12342666	PLATE,MOUNTING PART OF KIT P/N 57K1641..... UOC:HPM,KTV	2
16	PAOZZ	5306013601130	24617	456958	BOLT,MACHINE 3/8-16 X 4.00,PART OF KIT P/N 57K1641..... UOC:HPM,KTV	2

(1) ITEM NO	(2) SMR CODE	(3) NSN	(4) CAGEC	(5) PART NUMBER	(6) DESCRIPTION AND USABLE ON CODES(UOC)	(7) QTY
17	PAOZZ	5310009359021	96906	MS51943-35	NUT,SELF-LOCKING,HE 3/8-16,PART OF KIT P/N 57K1641..... UOC:HPM,KTV	6
18	PAOZZ	5340013611212	19207	12342623	BRACKET,DOUBLE ANGL PART OF KIT P/N 57K1641..... UOC:HPM,KTV	2
19	PAOZZ	5365013599406	19207	12342557	SPACER,STRAIGHT PART OF KIT P/N 57K1641..... UOC:HPM,KTV	2
20	PAOZZ	5340013598933	19207	12342560	BRACKET,ANGLE LOWER FRONT,PART OF KIT P/N 57K1641..... UOC:HPM,KTV	2
21	PAOZZ	5310000614650	96906	MS51943-31	NUT,SELF-LOCKING,HE 1/4-20,PART OF KIT P/N 57K1641..... UOC:HPM,KTV	12
22	PAOZZ	5340011978674	19207	12338839-6	HANDLE,BOW PART OF KIT P/N 57K1641. UOC:HPM,KTV	6
23	PAOZZ	5340013601886	19207	12342562	STRAP,RETAINING PART OF KIT P/N 57K1641..... UOC:HPM,KTV	3
KIT	KFOZZ		19207	57K1641	KIT,CAMOUFLAGE RACK ASSEMBLY PART OF KIT P/N 57K1628 PART OF KIT P/N 57K0235..... UOC:HPM,KTV	1
					BOLT,MACHINE (4) 440-1	
					BOLT,MACHINE (2) 440-7	
					BOLT,MACHINE (2) 440-16	
					BRACKET,ANGLE (2) 440-20	
					BRACKET,DOUBLE ANGL(2) 440-18	
					BRACKET,MOUNTING (2) 440-8	
					BRACKET,MOUNTING (2) 440-14	
					HANDLE,BOW (6) 440-22	
					MOUNT,RESILIENT (4) 440-4	
					NUT,SELF-LOCKING,HE(8) 440-11	
					NUT,SELF-LOCKING,HE(6) 440-17	
					NUT,SELF-LOCKING,HE(12) 440-21	
					PLATE,MOUNTING (2) 440-15	
					PLATE,SNUBBER,VEHIC(4) 440-5	
					RACK ASSEMBLY (1) 440-13	
					SCREW,CAP,HEXAGON H(12) 440-10	
					SCREW,CAP,HEXAGON H(2) 440-12	
					SPACER,SLEEVE (2) 440-3	
					SPACER,STRAIGHT (2) 440-19	
					STRAP,RETAINING (3) 440-23	
					WASHER,FLAT (12) 440-2	
					WASHER,FLAT (12) 440-6	
					WASHER,FLAT (30) 440-9	

END OF FIGURE

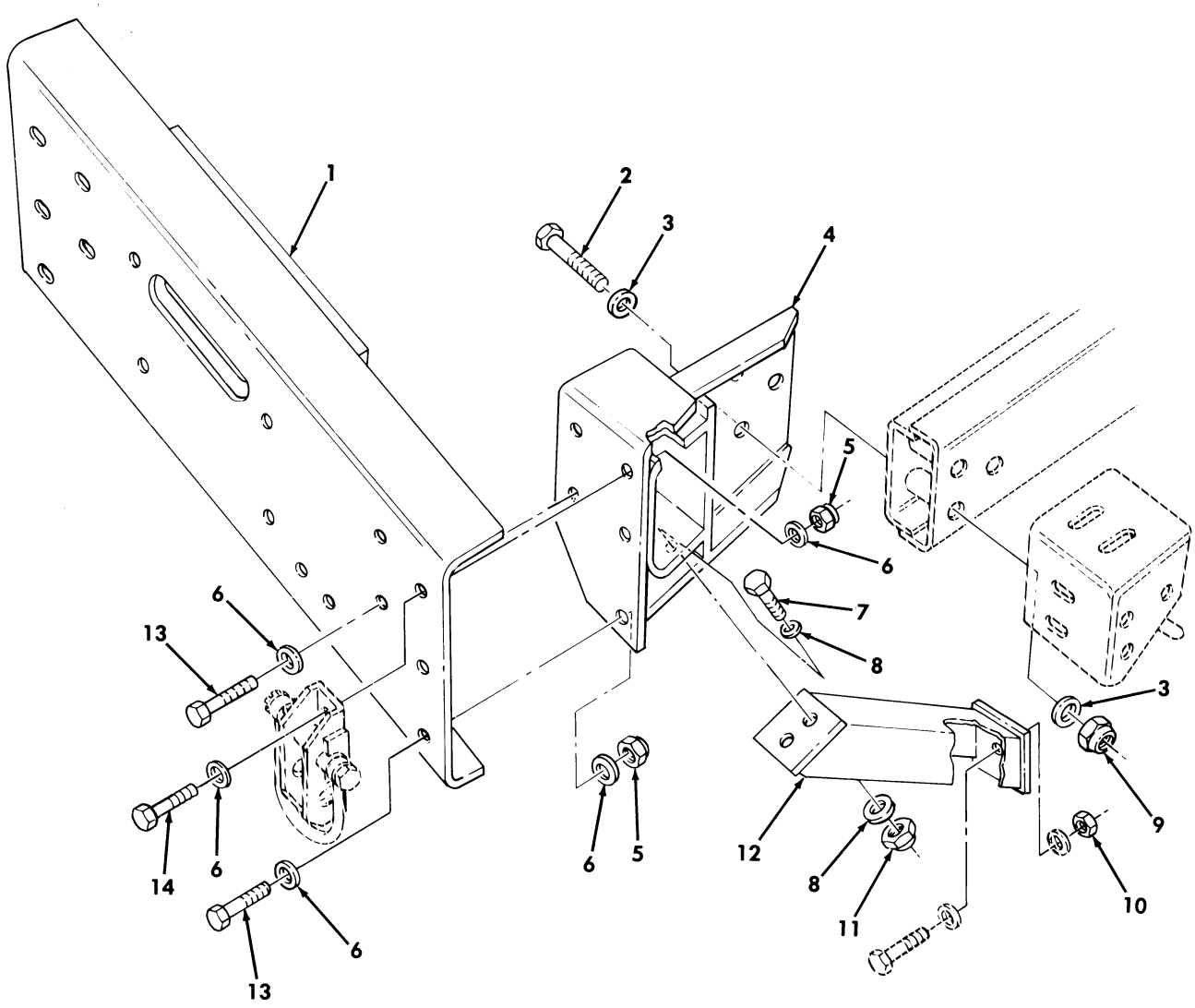

Figure 441. Kit, Prime Mover, Lt. Howitzer, 105 MM L119, Front Bumper.

(1) ITEM NO	(2) SMR CODE	(3) NSN	(4) CAGEC	(5) PART NUMBER	(6) DESCRIPTION AND USABLE ON CODES(UOC)	(7) QTY
					GROUP 3307 SPECIAL PURPOSE KITS	
					FIG. 441 KIT,PRIME MOVER,LT. HOWITZER,105 MM L119,FRONT BUMPER	
1	PAOZZ	2540013618206	19207	12342395	BUMPER,VEHICULAR PART OF KIT P/N 57K1628..... UOC:HPM	1
2	PAOZZ	5305011112774	24617	9428039	SCREW,CAP,HEXAGON H 5/8-11 X 3.75, PART OF KIT P/N 57K1628..... UOC:HPM	6
3	PAOZZ	5310011517347	24617	2436167	WASHER,FLAT 5/8,PART OF KIT P/N 57K1628..... UOC:HPM	12
4	PFOZZ	2510013581178	19207	12342387	FRAME SECTION,STRU L.H.,PART OF KIT P/N 57K1628..... UOC:HPM	1
4	PFOZZ	2510013578789	19207	12342388	FRAME SECTION,STRU R.H.,PART OF KIT P/N 57K1628..... UOC:HPM	1
5	PAOZZ	5310004883889	96906	MS51943-39	NUT,SELF-LOCKING,HE 1/2-13,PART OF KIT P/N 57K1628..... UOC:HPM	10
6	PAOZZ	5310011211703	24617	2436165	WASHER,FLAT 1/2,PART OF KIT P/N 57K1628..... UOC:HPM	16
7	PAOZZ	5305009422196	24617	9427321	SCREW,CAP,HEXAGON H 3/8-16 X 1/8, PART OF KIT P/N 57K1628..... UOC:HPM	4
8	PAOZZ	5310000806004	96906	MS27183-14	WASHER,FLAT 3/8,PART OF KIT P/N 57K1628..... UOC:HPM	8
9	PAOZZ	5310000614651	96906	MS51943-43	NUT,SELF-LOCKING,HE 5/8-11,PART OF KIT P/N 57K1628..... UOC:HPM	6
10	PAOZZ	5310004093333	96906	MS51943-45	NUT,PLAIN,HEXAGON 3/4-10,PART OF KIT P/N 57K1628..... UOC:HPM	2
11	PAOZZ	5310009359021	96906	MS51943-35	NUT,SELF-LOCKING,HE 3/8-16,PART OF KIT P/N 57K1628..... UOC:HPM	4
12	PFOZZ	2510013581176	19207	12342389	FRAME SECTION,STRU L.H.,PART OF KIT P/N 57K1628..... UOC:HPM	1
12	PFOZZ	2510013581177	19207	12342390	FRAME SECTION,STRU R.H.,PART OF KIT P/N 57K1628..... UOC:HPM	1
13	PAOZZ	5306013601125	24617	455000	BOLT,MACHINE 1/2-13 X 1.25,PART OF KIT P/N 57K1628..... UOC:HPM	6
14	PAOZZ	5305000712070	80204	B1821BH050C175N	SCREW,CAP,HEXAGON H 1/2-13 X 1.75, PART OF KIT P/N 57K1628..... UOC:HPM	4

END OF FIGURE

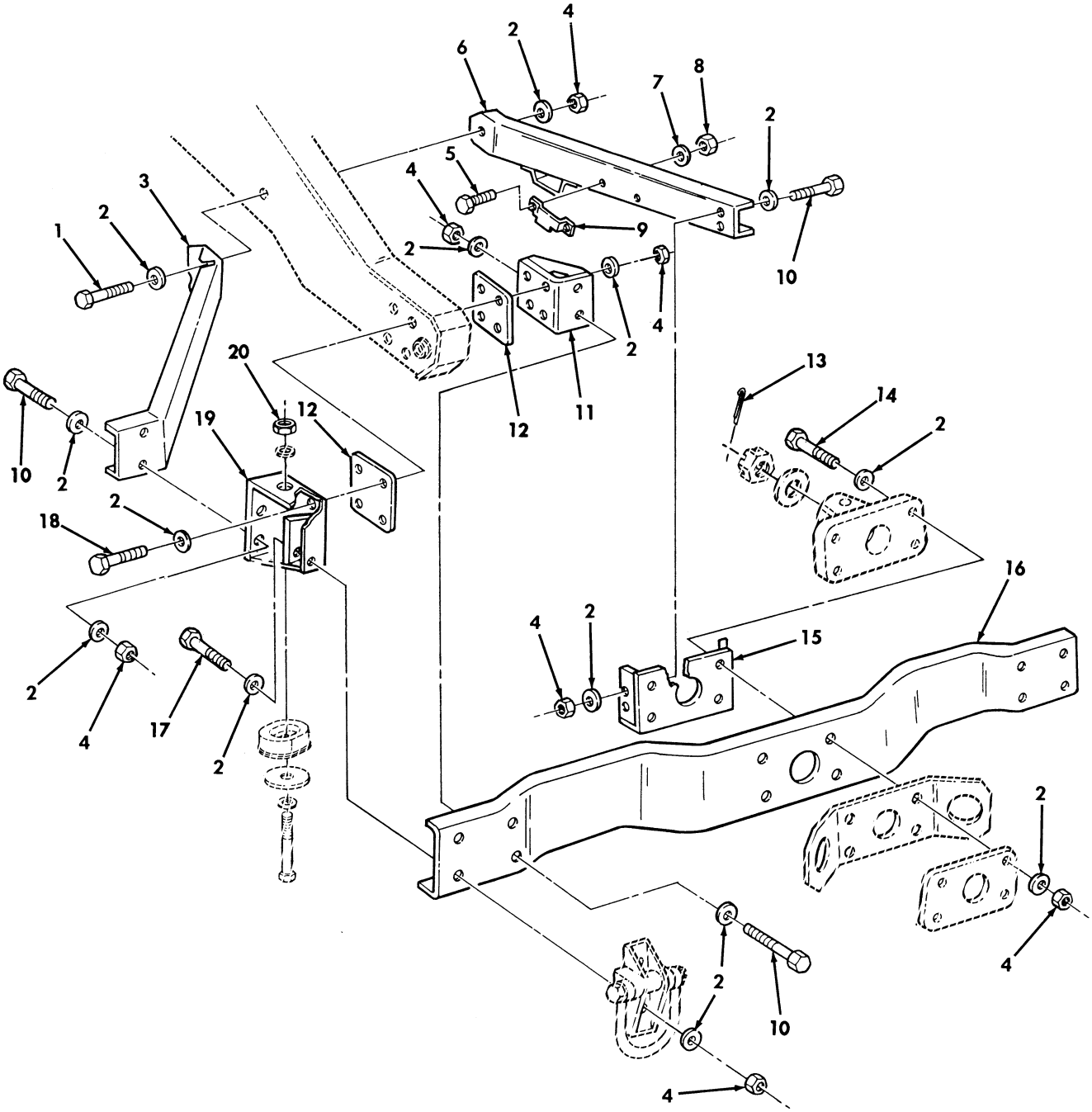

Figure 442. Kit, Prime Mover, Lt. Howitzer, 105 MM L119, Rear Bumper.

(1) ITEM NO	(2) SMR CODE	(3) NSN	(4) CAGEC	(5) PART NUMBER	(6) DESCRIPTION AND USABLE ON CODES(UOC)	(7) QTY
					GROUP 3307 SPECIAL PURPOSE KITS	
					FIG. 442 KIT,PRIME MOVER,LT. HOWITZER,105 MM L119,REAR BUMPER	
1	PAOZZ	5306013601128	24617	455006	BOLT,MACHINE 1/2-13 X 3.75,PART OF KIT P/N 57K1628..... UOC:HPM	2
2	PAOZZ	5310011211703	24617	2436165	WASHER,FLAT 1/2,PART OF KIT P/N 57K1628..... UOC:HPM	60
3	PAOZZ	2590013618087	19207	12342522	BRACKET,VEHICULAR REAR BUMPER, OUTER,L.H.,PART OF KIT P/N 57K1628.. UOC:HPM	1
3	PAOZZ	2590013618088	19207	12342540	BRACKET,VEHICULAR REAR BUMPER, OUTER,R.H.,PART OF KIT P/N 57K1628.. UOC:HPM	1
4	PAOZZ	5310004883889	96906	MS51943-39	NUT,SELF-LOCKING,HE 1/2-13,PART OF KIT P/N 57K1628..... UOC:HPM	30
5	PAOZZ	5305011858674	24617	9421294	SCREW,CAP,HEXAGON H #10-24 X 1/2, PART OF KIT P/N 57K1628..... UOC:HPM	4
6	PAOZZ	2590013605414	19207	12342516	BRACKET,VEHICULAR C REAR BUMPER, INNER,L.H.,PART OF KIT P/N 57K1628.. UOC:HPM	1
6	PAOZZ	2590013605413	19207	12342517	BRACKET,VEHICULAR C REAR BUMPER, INNER,R.H.,PART OF KIT P/N 57K1628.. UOC:HPM	1
7	PAOZZ	5310000453296	96906	MS35338-43	WASHER,LOCK #10,PART OF KIT P/N 57K1628..... UOC:HPM	4
8	PAOZZ	5310007349758	96906	MS35649-202	NUT,PLAIN,HEXAGON #10-24,PART OF KIT P/N 57K1628..... UOC:HPM	4
9	PAOZZ	2590013609537	19207	12342539	BRACKET,VEHICULAR C PART OF KIT P/N 57K1628..... UOC:HPM	2
10	PAOZZ	5306013601125	24617	455000	BOLT,MACHINE 1/2-13 X 1.25,PART OF KIT P/N 57K1628..... UOC:HPM	12
11	PAOZZ	2590013605412	19207	12342520	BRACKET,VEHICULAR C REAR BUMPER MOUNT,INNER,L.H.,PART OF KIT P/N 57K1628..... UOC:HPM	1
11	PAOZZ	2590013609536	19207	12342521	BRACKET,VEHICULAR C REAR BUMPER MOUNT,INNER,R.H.,PART OF KIT P/N 57K1628..... UOC:HPM	1
12	PAOZZ	5340013602020	19207	12342750	PLATE,MOUNTING PART OF KIT P/N 57K1628..... UOC:HPM	4
13	PAOZZ	5315008460126	96906	MS24665-628	PIN,COTTER 1/4 X 3.00,PART OF KIT	1

(1) ITEM NO	(2) SMR CODE	(3) NSN	(4) CAGEC	(5) PART NUMBER	(6) DESCRIPTION AND USABLE ON CODES(UOC)	(7) QTY
					P/N 57K1628..... UOC:HPM	
14	PAOZZ	5306013601126	24617	455002	BOLT,MACHINE 1/2-13 X 2.50,PART OF KIT P/N 57K1628..... UOC:HPM	4
15	PAOZZ	2590013641534	19207	12342523	BRACKET,VEHICULAR PART OF KIT P/N 57K1628..... UOC:HPM	1
16	PFOZZ	2540013602482	19207	12342515	BUMPER,VEHICULAR REAR,PART OF KIT P/N 57K1628..... UOC:HPM	1
17	PAOZZ	5306013601127	24617	455004	BOLT,MACHINE 1/2-13 X 3.00,PART OF KIT P/N 57K1628..... UOC:HPM	4
18	PAOZZ	5306011865369	7X677	9415560	BOLT,MACHINE 1/2-13 X 3.00,PART OF KIT P/N 57K1628..... UOC:HPM	8
19	PFOZZ	2590013605411	19207	12342518	BRACKET,VEHICULAR C REAR BUMPER MOUNT,OUTER,L.H.,PART OF KIT P/N 57K1628..... UOC:HPM	1
19	PFOZZ	2590013632084	19207	12342519	BRACKET,VEHICULAR C REAR BUMPER MOUNT,OUTER,R.H.,PART OF KIT P/N 57K1628..... UOC:HPM	1
20	PAOZZ	5310000614651	96906	MS51943-43	NUT,SELF-LOCKING 5/8-11,PART OF KIT P/N 57K1628..... UOC:HPM	2

END OF FIGURE

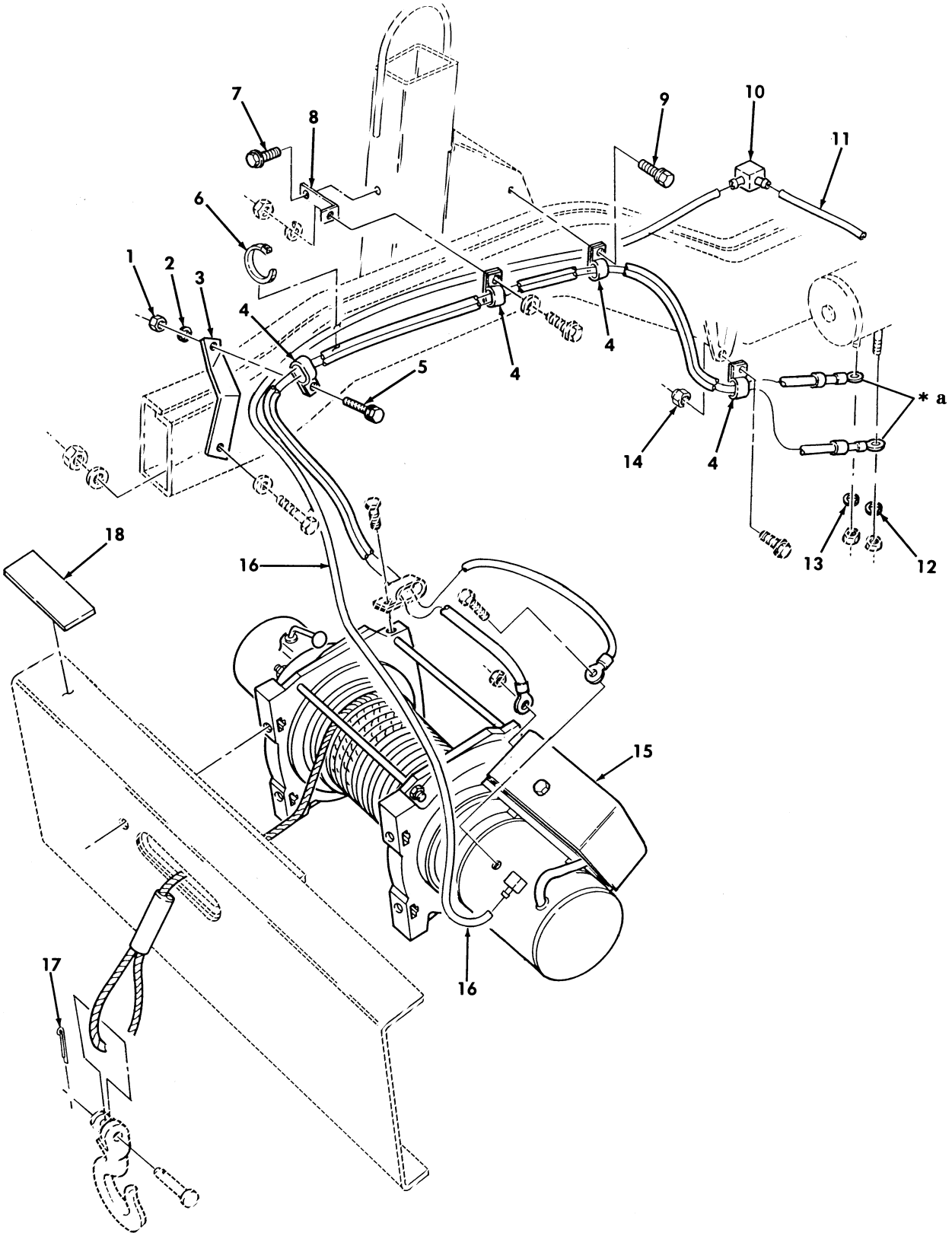

* a PART OF ITEM 15

Figure 443. Kit, Prime Mover, Lt. Howitzer, 105 MM L119, Winch.

(1) ITEM NO	(2) SMR CODE	(3) NSN	(4) CAGEC	(5) PART NUMBER	(6) DESCRIPTION AND USABLE ON CODES(UOC)	(7) QTY
					GROUP 3307 SPECIAL PURPOSE KITS	
					FIG. 443 KIT,PRIME MOVER,LT. HOWITZER,105 MM L119,WINCH	
1	PAOZZ	5310009050762	96906	MS51967-3	NUT,PLAIN,HEXAGON 1/4-20,PART OF KIT P/N 57K1628..... UOC:HPM	2
2	PAOZZ	5310005825965	96906	MS35338-44	WASHER,LOCK 1/4,PART OF KIT P/N 57K1628..... UOC:HPM	2
3	PFOZZ	5340012669173	19207	12338481	BRACKET,DOUBLE ANGL PART OF KIT P/N 57K1628..... UOC:HPM	1
4	PAOZZ	5340004381833	19207	7721654	CLAMP,LOOP PART OF KIT P/N 57K1628. UOC:HPM	4
5	PAOZZ	5305004890743	24617	9415477	SCREW,MACHINE 1/4-20 X 0.75,PART OF KIT P/N 57K1628..... UOC:HPM	2
6	PAOZZ	5975012055379	96906	MS3367-7	STRAP,TIEDOWN,ELECT PART OF KIT P/N 57K1628..... UOC:HPM	4
7	PAOZZ	5305011013312	96906	MS51851-126	SCREW,TAPPING 3/8-16 X 0.75,PART OF KIT P/N 57K1628..... UOC:HPM	1
8	PAOZZ	5340011922256	19207	12338663	BRACKET PART OF KIT P/N 57K1628.... UOC:HPM	1
9	PAOZZ	5305001913640	96906	MS51851-85	SCREW,TAPPING 1/4-20 X 0.62,PART OF KIT P/N 57K1628..... UOC:HPM	1
10	PAOZZ	4730010035105	79470	1064X4	TEE,HOSE PART OF KIT P/N 57K1628... UOC:HPM	1
11	MOOZZ		19207	CPR104420-1-2	TUBING,NONMETALLIC MAKE FROM TUBE, P/N CPR104420-1,2 INCHES LONG,PART OF KIT P/N 57K1628..... UOC:HPM	1
12	PAOZZ	5310006379541	96906	MS35338-46	WASHER,LOCK 3/8,PART OF KIT P/N 57K1628..... UOC:HPM	1
13	PAOZZ	5310012167390	96906	MS51415-9	WASHER,LOCK 1/2,PART OF KIT P/N 57K1628..... UOC:HPM	1
14	PAOZZ	5310011520598	24617	271172	NUT,SELF-LOCKING,AS PART OF KIT P/N 57K1628..... UOC:HPM	1
15	PAOFF	2590011797602	19207	12339723	WINCH,DRUM PART OF KIT P/N 57K1628. UOC:HPM	1
16	MOOZZ		19207	CPR104420-1-70	TUBING,NONMETALLIC MAKE FROM TUBE, P/N CPR104420-1,70 INCHES LONG,PART OF KIT P/N 57K1628..... UOC:HPM	1
17	PAOZZ	5315008395822	96906	MS24665-353	PIN,COTTER 0.120 X 1.13,PART OF KIT P/N 57K1628.....	1

(1) ITEM NO	(2) SMR CODE	(3) NSN	(4) CAGEC	(5) PART NUMBER	(6) DESCRIPTION AND USABLE ON CODES(UOC)	(7) QTY
					UOC:HPM	
18	PAOZZ	7690012646536	19207	12340923	DECAL PART OF KIT P/N 57K1628.....	1
					UOC:HPM	

END OF FIGURE

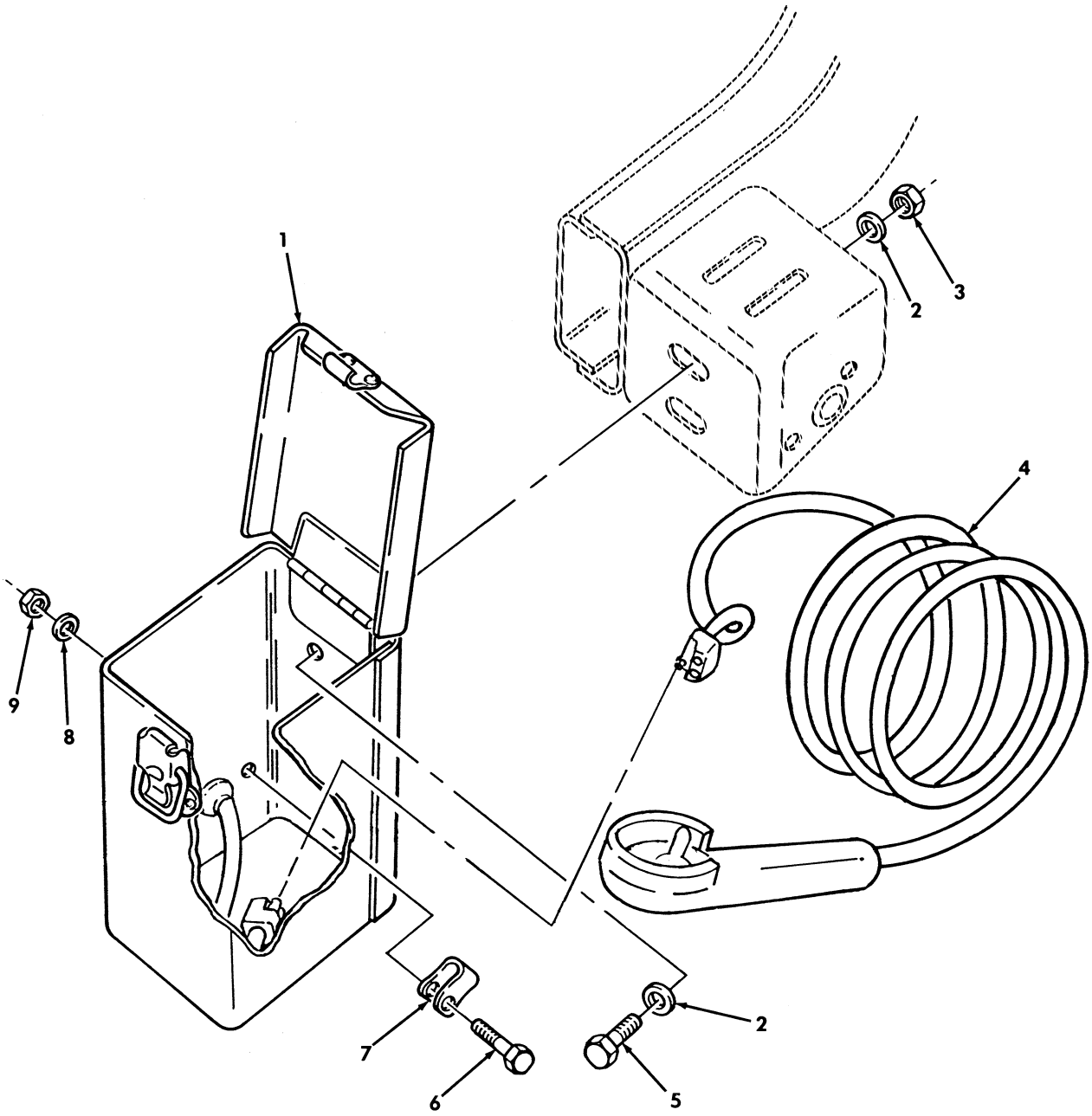

Figure 444. Kit, Prime Mover, Lt. Howitzer, 105 MM L119, Winch Control and Storage Box.

(1) ITEM NO	(2) SMR CODE	(3) NSN	(4) CAGEC	(5) PART NUMBER	(6) DESCRIPTION AND USABLE ON CODES(UOC)	(7) QTY
					GROUP 3307 SPECIAL PURPOSE KITS	
					FIG. 444 KIT,PRIME MOVER,LT. HOWITZER,105 MM L119,WINCH CONTROL AND STORAGE BOX	
1	PAOZZ	2540012096838	19207	12338489-1	BOX ACCESSORIES STO PART OF KIT P/N 57K1628..... UOC:HPM	1
2	PAOZZ	5310011211703	24617	2436165	WASHER,FLAT 1/2,PART OF KIT P/N 57K1628..... UOC:HPM	4
3	PAOZZ	5310004883889	96906	MS51943-39	NUT,SELF-LOCKING 1/2-13,PART OF KIT P/N 57K1628..... UOC:HPM	2
4	PAOZZ	2590012141566	19207	12338495	CONTROL HANDLE PART OF KIT P/N 57K1628..... UOC:HPM	1
5	PAOZZ	5306008440036	7X677	427566	BOLT,MACHINE 1/2-13 X 1.50,PART OF KIT P/N 57K1628..... UOC:HPM	2
6	PAOZZ	5305004890743	24617	9415477	SCREW,MACHINE 1/4-20 X .750,PART OF KIT P/N 57K1628..... UOC:HPM	1
7	PAOZZ	5340008091492	96906	MS21333-100	CLAMP,LOOP PART OF KIT P/N 57K1628. UOC:HPM	1
8	PAOZZ	5310005825965	96906	MS35338-44	WASHER,LOCK 1/4,PART OF KIT P/N 57K1628..... UOC:HPM	1
9	PAOZZ	5310009050762	96906	MS51967-3	NUT,PLAIN,HEXAGON 1/4-20,PART OF KIT P/N 57K1628..... UOC:HPM	1

END OF FIGURE

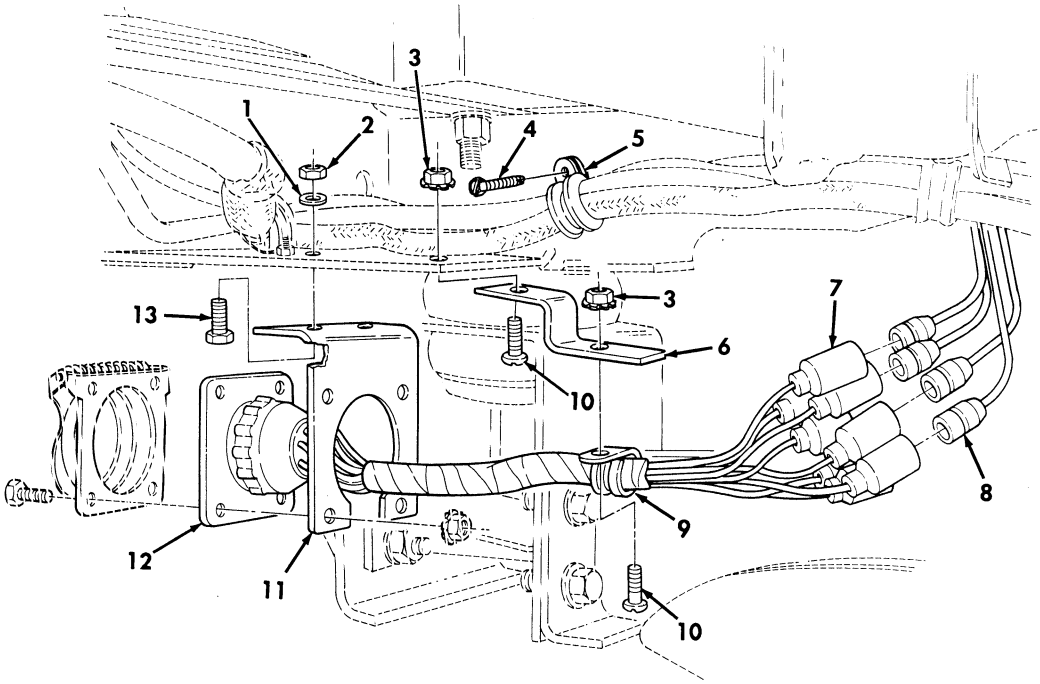

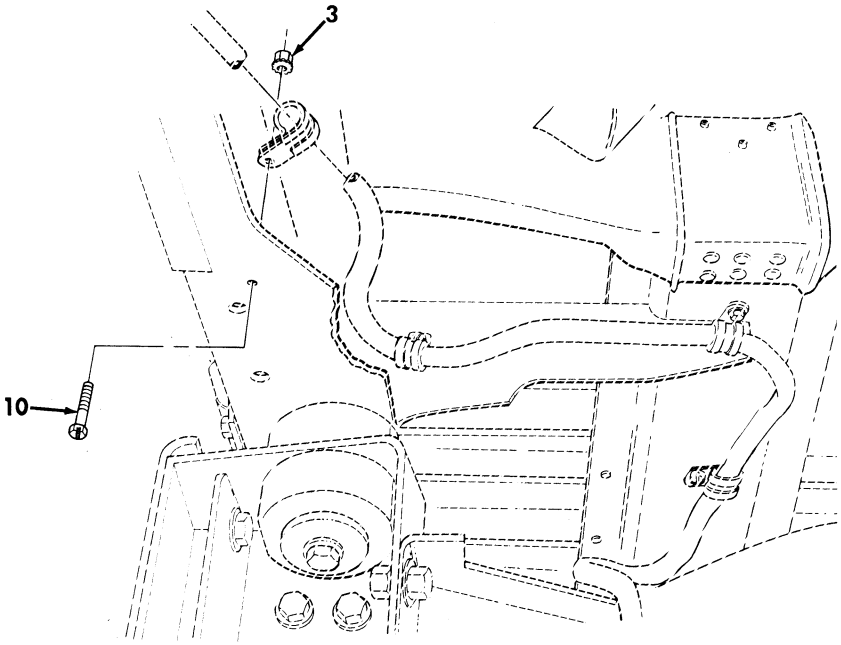

Figure 445. Kit, Prime Mover, Lt. Howitzer, 105 MM L119, Trailer Receptacle and Body Wiring Harness.

(1) ITEM NO	(2) SMR CODE	(3) NSN	(4) CAGEC	(5) PART NUMBER	(6) DESCRIPTION AND USABLE ON CODES(UOC)	(7) QTY
					GROUP 3307 SPECIAL PURPOSE KITS	
					FIG. 445 KIT,PRIME MOVER,LT. HOWITZER,105 MM L119,TRAILER RECEPTACLE AND BODY WIRING HARNESS	
1	PAOZZ	5310011191024	24617	2436162	WASHER,FLAT 5/16,PART OF KIT P/N 57K1628..... UOC:HPM	2
2	PAOZZ	5310008140673	96906	MS51943-33	NUT,SELF-LOCKING 5/16-18,PART OF KIT P/N 57K1628..... UOC:HPM	2
3	PAOZZ	5310001249265	24617	271169	NUT,PLAIN ASSEMBLED #10-32,PART OF KIT P/N 57K1628..... UOC:HPM	3
4	PAOZZ	5305012854234	24617	9414241	BOLT,ASSEMBLED WASH #10-32 X .62, PART OF KIT P/N 57K1628..... UOC:HPM	1
5	PAOZZ	5340009899222	96906	MS21333-74	CLAMP,LOOP PART OF KIT P/N 57K1628. UOC:HPM	1
6	PAOZZ	5340013601189	19207	12342668	BRACKET,DOUBLE ANGL PART OF KIT P/N 57K1628..... UOC:HPM	1
7	PAOZZ	5935004626603	96906	MS27142-2	CONNECTOR,PLUG,ELEC PART OF KIT P/N 57K1628..... UOC:HPM	2
8	PAOZZ	5935001677775	96906	MS27144-1	CONNECTOR,PLUG,ELEC PART OF KIT P/N 57K1628..... UOC:HPM	7
9	PAOZZ	5340000913790	96906	MS21333-72	CLAMP,LOOP PART OF KIT P/N 57K1628. UOC:HPM	1
10	PAOZZ	5305000187838	24617	187838	SCREW,CAP,HEXAGON H #10-32 X 5/8, PART OF KIT P/N 57K1628..... UOC:HPM	3
11	PAOZZ	5340013144951	19207	12338696-1	BRACKET,ANGLE PART OF KIT P/N 57K1628..... UOC:HPM	1
12	PAOZZ	6150013662916	19207	12342667	WIRING,HARNESS PART OF IT P/N 57K1628..... UOC:HPM	1
13	PAOZZ	5306002264827	80204	B1821BH031C100N	BOLT,MACHINE 5/16-18 X 1 PART OF KIT P/N 57K1628..... UOC:HPM	2

END OF FIGURE

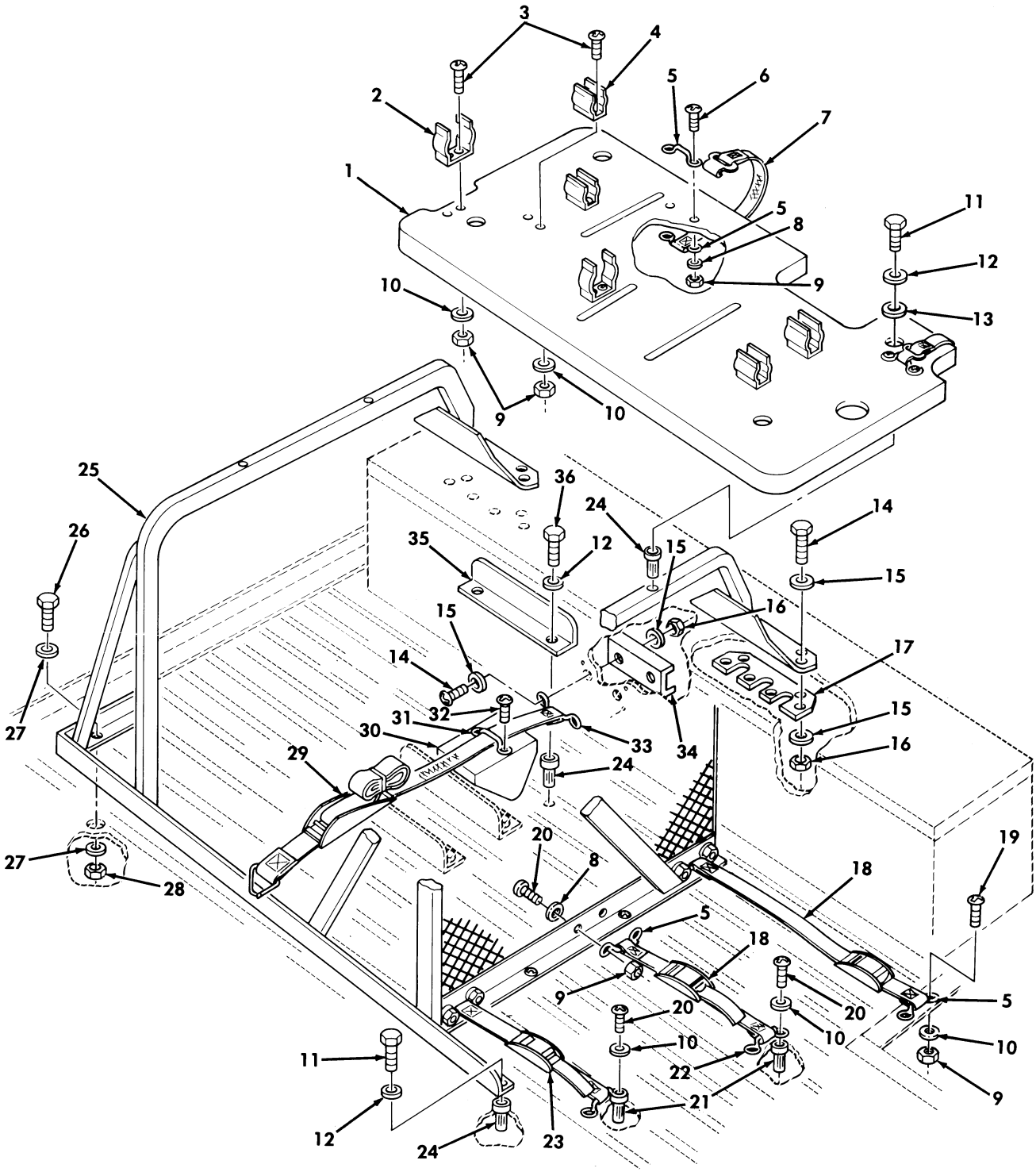

Figure 446. Kit, Prime Mover, Lt. Howitzer, 105 MM L119, Ammo Rack and Sight Boxes Stowage.

(1) ITEM NO	(2) SMR CODE	(3) NSN	(4) CAGEC	(5) PART NUMBER	(6) DESCRIPTION AND USABLE ON CODES(UOC)	(7) QTY
					GROUP 3307 SPECIAL PURPOSE KITS	
					FIG. 446 KIT,PRIME MOVER,LT. HOWITZER,105 MM L119,AMMO RACK AND SIGHT BOXES STOWAGE	
1	MOOZZ		19207	12342595	TRAY,AMMO GUARD TOP MAKE FROM PLYWOOD,P/N MIL-P-18066,.750 THICK, PART OF KIT P/N 57K1628..... UOC:HPM	1
2	PAOZZ	5340013601727	19207	12342584	CLIP,SPRING TENSION PART OF KIT P/N 57K1628..... UOC:HPM	2
3	PAOZZ	5305009953442	96906	MS35207-268	SCREW,MACHINE #10-32 X 1.250,PART OF KIT P/N 57K1628..... UOC:HPM	12
4	PAOZZ	5340013598819	19207	12342585	CLIP,SPRING TENSION PART OF KIT P/N 57K1628..... UOC:HPM	4
5	PAOZZ	5340013145957	19207	12338839-1	LOOP,STRAP FASTENER PART OF KIT P/N 57K1628..... UOC:HPM	8
6	PAOZZ	5305009847352	96906	MS35191-278	SCREW,MACHINE #10-32 X 1.50,PART OF KIT P/N 57K1628..... UOC:HPM	4
7	PAOZZ	5340013604909	19207	12339816-3	STRAP,WEBBING PART OF KIT P/N 57K1628..... UOC:HPM	2
8	PAOZZ	5310008098546	96906	MS27183-8	WASHER,FLAT #10,PART OF KIT P/N 57K1628..... UOC:HPM	16
9	PAOZZ	5310002514503	24617	9411893	NUT,LOCK #10-32,PART OF KIT P/N 57K1628..... UOC:HPM	24
10	PAOZZ	5310000145850	96906	MS27183-42	WASHER,FLAT #10,PART OF KIT P/N 57K1628..... UOC:HPM	18
11	PAOZZ	5340013235509	24617	454838	BOLT,MACHINE PART OF KIT P/N 57K1628 UOC:HPM	10
12	PAOZZ	5310005825965	96906	MS35338-44	WASHER,LOCK 1/4,PART OF KIT P/N 57K1628..... UOC:HPM	16
13	PAOZZ	5310008093078	96906	MS27183-11	WASHER,FLAT 1/4,PART OF KIT P/N 57K1628..... UOC:HPM	4
14	PAOZZ	5305002253843	OAT62	35A2C5	SCREW,CAP,HEXAGON H 1/4-20 X 1.00, PART OF KIT P/N 57K1628..... UOC:HPM	14
15	PAOZZ	5310011023270	24617	2436161	WASHER,FLAT 1/4,PART OF KIT P/N 57K1628..... UOC:HPM	28
16	PAOZZ	5310000614650	96906	MS51943-31	NUT,SELF-LOCKING,HE 1/4-20,PART OF	14

(1) ITEM NO	(2) SMR CODE	(3) NSN	(4) CAGEC	(5) PART NUMBER	(6) DESCRIPTION AND USABLE ON CODES(UOC)	(7) QTY
					KIT P/N 57K1628..... UOC:HPM	
17	PFOZZ	5340013602979	19207	12342586	PLATE,MOUNTING PART OF KIT P/N 57K1628..... UOC:HPM	2
18	PAOZZ	5340012552812	19207	12340529-16	STRAP,WEBBING PART OF KIT P/N 57K1628..... UOC:HPM	2
19	PAOZZ	5305009847342	96906	MS35191-274	SCREW,MACHINE #10-32 X .750,PART OF KIT P/N 57K1628..... UOC:HPM	2
20	PAOZZ	5305009931848	96906	MS35207-265	SCREW,MACHINE #10-32 X .750,PART OF KIT P/N 57K1628..... UOC:HPM	10
21	PAOZZ	5310011981723	03481	S10P175	NUT,PLAIN,BLIND RIV #10-32,PART OF KIT P/N 57K1628..... UOC:HPM	4
22	PAOZZ	2510011995748	19207	12338839-8	LOOP,FOOTMAN,FLAT PART OF KIT P/N 57K1628..... UOC:HPM	2
23	PAOZZ	5340012032708	19207	12340529-7	STRAP,WEBBING PART OF KIT P/N 57K1628..... UOC:HPM	1
24	PAOZZ	5310011981722	19207	12339998-13	PLUSNUT 1/4-20,PART OF KIT P/N 57K1628..... UOC:HPM	16
25	PAOZZ	2590013602417	19207	12342574	RACK,AMMUNITION STO PART OF KIT P/N 57K1628..... UOC:HPM	1
26	PAOZZ	5305000712070	80204	B1821BH050C175N	BOLT,HEXAGON HEAD 1/2-13 X 1.75, PART OF KIT P/N 57K1628..... UOC:HPM	1
27	PAOZZ	5310001670823	88044	AN960-816	WASHER,FLAT 1/2,PART OF KIT P/N 57K1628..... UOC:HPM	2
28	PAOZZ	5310004883889	96906	MS51943-39	NUT,SELF-LOCKING 1/2-13,PART OF KIT P/N 57K1628..... UOC:HPM	1
29	PAOZZ	5340013601887	19207	12342594	STRAP,WEBBING PART OF KIT P/N 57K1628..... UOC:HPM	1
30	MOOZZ		19207	12342596	WEDGE MAKE FROM WOOD,P/N 13219E0079, 3.00 THICK,PART OF KIT P/N 57K1628.. UOC:HPM	1
31	PAOZZ	5340011978674	19207	12338839-6	HANDLE,BOW PART OF KIT P/N 57K1628. UOC:HPM	7
32	PAOZZ	5305004324254	96906	MS51861-69	SCREW,TAPPING 1/4-13 X 1.00,PART OF KIT P/N 57K1628..... UOC:HPM	2
33	PAOZZ	5340013609070	19207	12342587	CLAMP,BRIDGE PART OF KIT P/N 57K1628 UOC:HPM	1
34	PAOZZ	5340013601188	19207	12342583	BRACKET,DOUBLE ANGL PART OF KIT P/N 57K1628.....	1

(1) ITEM NO	(2) SMR CODE	(3) NSN	(4) CAGEC	(5) PART NUMBER	(6) DESCRIPTION AND USABLE ON CODES(UOC)	(7) QTY
					UOC:HPM	
35	PAOZZ	5340013601784	19207	12342580	BRACKET,ANGLE PART OF KIT P/N 57K1628.....	3
					UOC:HPM	
36	PAOZZ	5305000680508	07482	1C817P63	BOLT,HEXAGON 1/4-20 X .750,PART OF KIT P/N 57K1628.....	6
					UOC:HPM	

END OF FIGURE

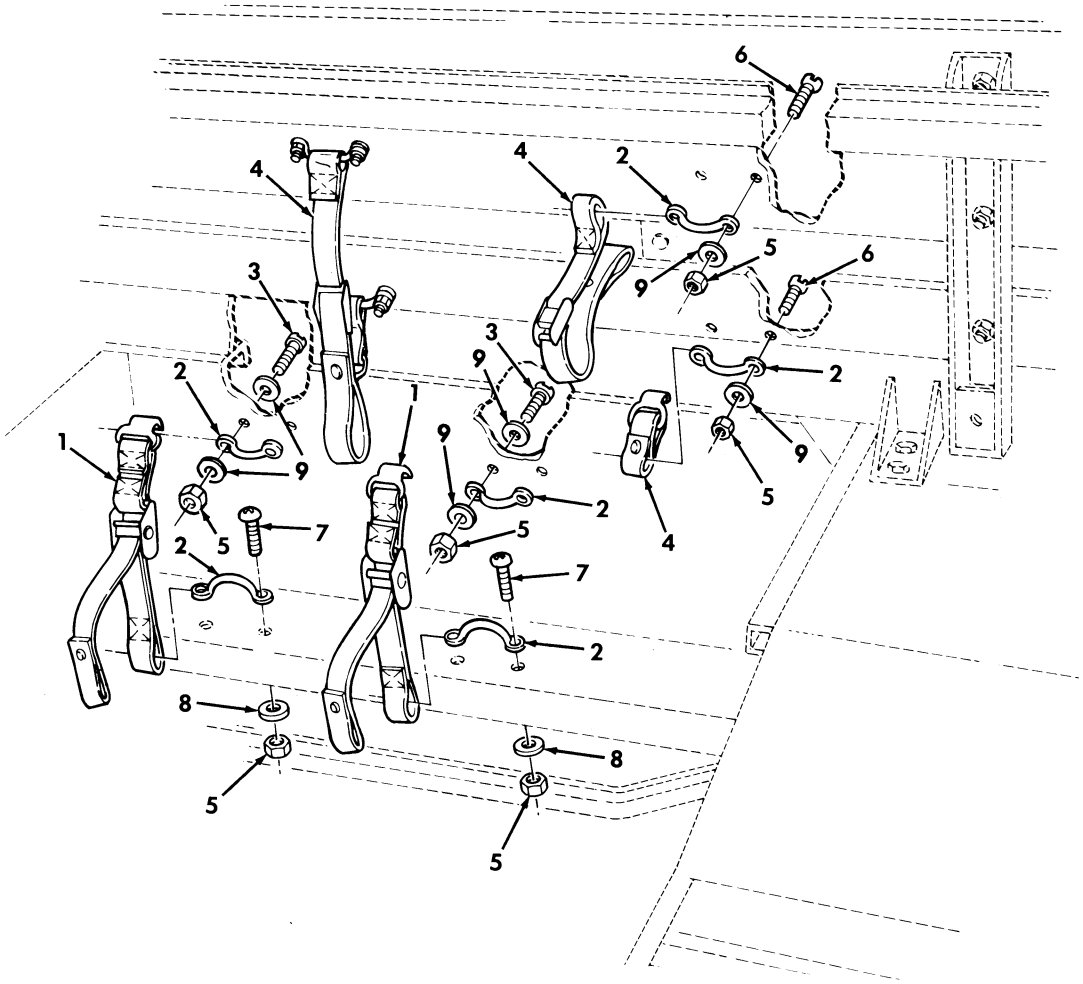

Figure 447. Kit, Prime Mover, Lt. Howitzer, 105 MM L119, Telephone, Remote, and Tripod Stowage.

(1) ITEM NO	(2) SMR CODE	(3) NSN	(4) CAGEC	(5) PART NUMBER	(6) DESCRIPTION AND USABLE ON CODES(UOC)	(7) QTY
					GROUP 3307 SPECIAL PURPOSE KITS	
					FIG. 447 KIT,PRIME MOVER,LT. HOWITZER,105 MM L119,TELEPHONE, REMOTE,AND TRIPOD STOWAGE	
1	PAOZZ	5340013604909	19207	12339816-3	STRAP ASSEMBLY PART OF KIT P/N 57K1628..... UOC:HPM	2
2	PAOZZ	5340013145957	19207	12338839-1	LOOP,STRAP,FASTENER PART OF KIT P/N 57K1628..... UOC:HPM	8
3	PAOZZ	5305009897435	96906	MS35207-264	SCREW,MACHINE PART OF KIT P/N 57K1628..... UOC:HPM	4
4	PAOZZ	5340012658923	19207	12339817-4	STRAP,WEBBING PART OF KIT P/N 57K1628..... UOC:HPM	2
5	PAOZZ	5310002514503	24617	9411893	NUT,LOCK #10-32,PART OF KIT P/N 57K1628..... UOC:HPM	16
6	PAOZZ	5305009572635	96906	MS35191-277	SCREW,MACHINE #10-32 X 1.25,PART OF KIT P/N 57K1628..... UOC:HPM	8
7	PAOZZ	5305009847341	96906	MS35191-273	SCREW,MACHINE #10-32 X 0.625,PART OF KIT P/N 57K1628..... UOC:HPM	4
8	PAOZZ	5310000145850	96906	MS27183-42	WASHER,FLAT #10,PART OF KIT P/N 57K1628..... UOC:HPM	4
9	PAOZZ	5310008098546	96906	MS27183-8	WASHER,FLAT #10,PART OF KIT P/N 57K1628..... UOC:HPM	16

END OF FIGURE

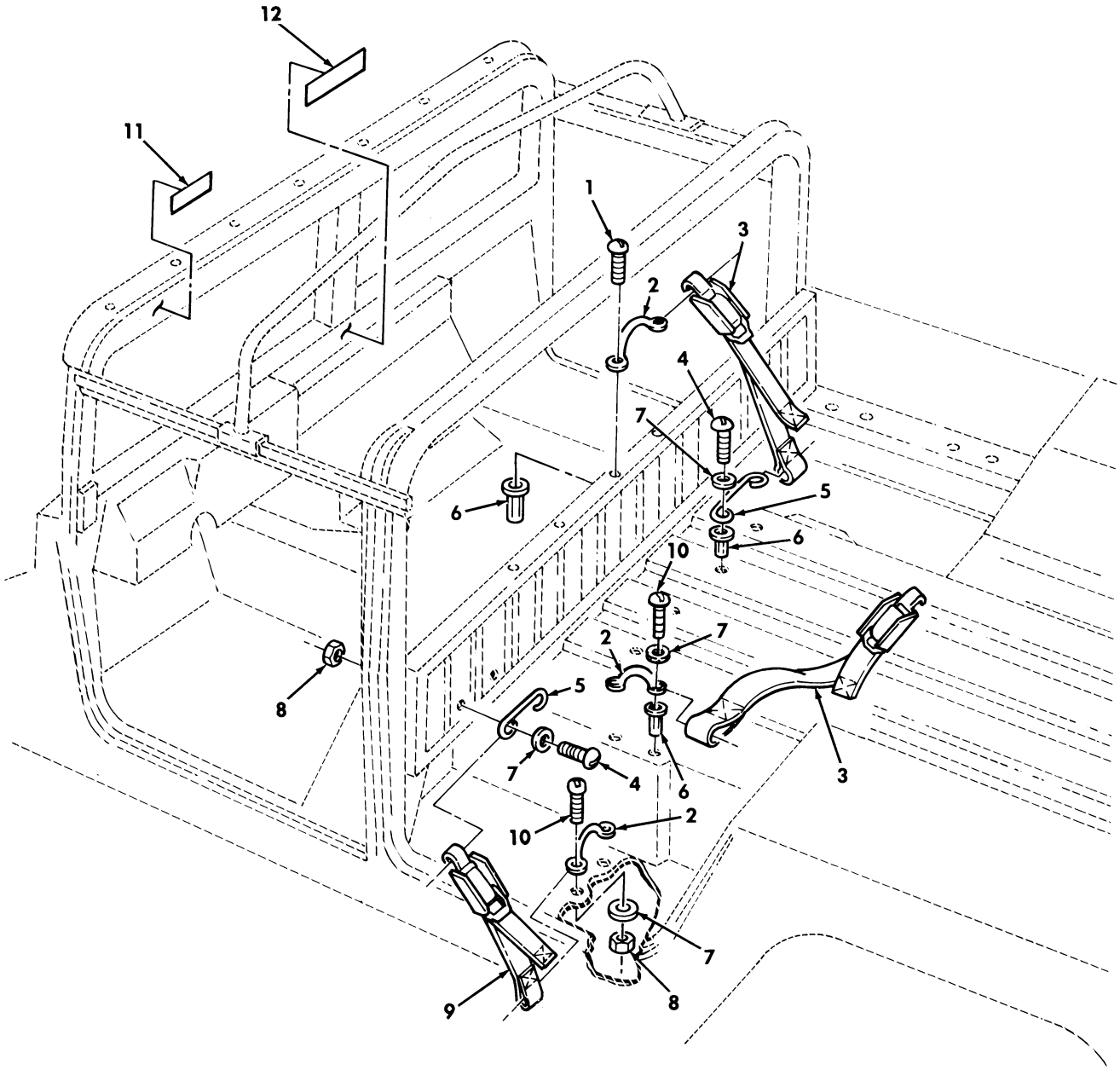

Figure 448. Kit, Prime Mover, Lt. Howitzer, 105 MM L119, Fuel Can, Water Can, Section Chest, and Spade Stowage.

(1) ITEM NO	(2) SMR CODE	(3) NSN	(4) CAGEC	(5) PART NUMBER	(6) DESCRIPTION AND USABLE ON CODES(UOC)	(7) QTY
					GROUP 3307 SPECIAL PURPOSE KITS	
					FIG. 448 KIT,PRIME MOVER,LT. HOWITZER,105 MM L119,FUEL CAN, WATER CAN,SECTION CHEST,AND SPADE STOWAGE	
1	PAOZZ	5305009847342	96906	MS35191-274	SCREW,MACHINE #10-32 X 0.75,PART OF KIT P/N 57K1628..... UOC:HPM	4
2	PAOZZ	5340013145957	19207	12338839-1	LOOP,STRAP,FASTENER PART OF KIT P/N 57K1628..... UOC:HPM	5
3	PAOZZ	5340012584529	19207	12340507-4	STRAP,WEBBING PART OF KIT P/N 57K1628..... UOC:HPM	4
4	PAOZZ	5305009931848	96906	MS35207-265	SCREW,MACHINE PART OF KIT P/N 57K1628..... UOC:HPM	8
5	PAOZZ	2510011995748	19207	12338839-8	LOOP,FOOTMAN,FLAT PART OF KIT P/N 57K1628..... UOC:HPM	4
6	PAOZZ	5310011981723	03481	S10P175	NUT,PLAIN,BLIND RIV #10-32,PART OF KIT P/N 57K1628..... UOC:HPM	12
7	PAOZZ	5310000145850	96906	MS27183-42	WASHER,FLAT #10,PART OF KIT P/N 57K1628..... UOC:HPM	14
8	PAOZZ	5310002514503	24617	9411893	NUT,LOCK #10-32,PART OF KIT P/N 57K1628..... UOC:HPM	6
9	PAOZZ	5340013617879	19207	12340507-6	STRAP,RETAINING PART OF KIT P/N 57K1628..... UOC:HPM	1
10	PAOZZ	5305009847341	96906	MS35191-273	SCREW,MACHINE #10-32 X 5/8,PART OF KIT P/N 57K1628..... UOC:HPM	6
11	PAOZZ	9905013658849	19207	12342670	PLATE,INSTRUCTION PART OF KIT P/N 57K1628..... UOC:HPM	1
12	PAOZZ		19207	12342669	DECAL CAUTION PART OF KIT P/N 57K1628..... UOC:HPM	1

END OF FIGURE

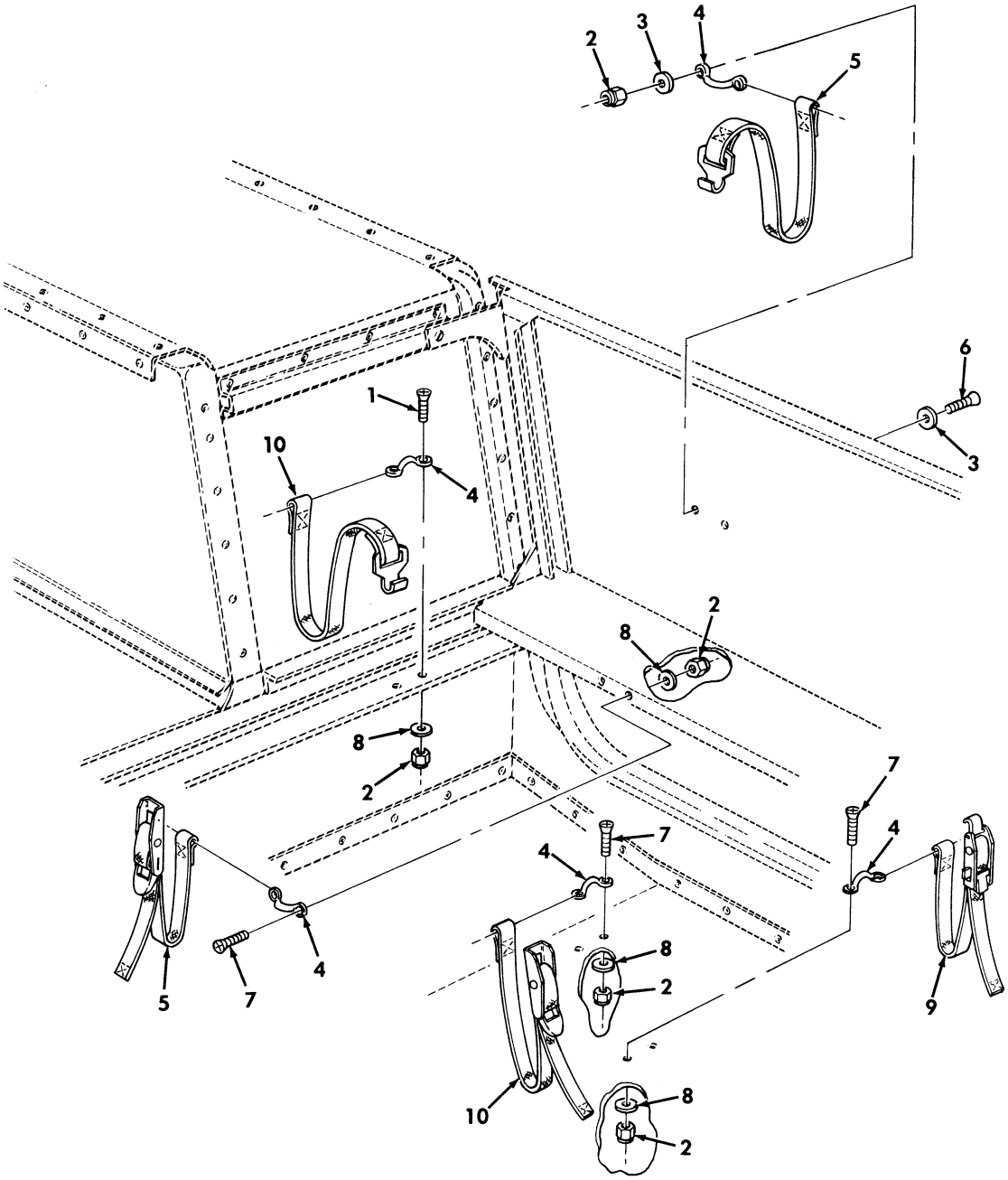

Figure 449. Kit, Prime Mover, Lt. Howitzer, 105 MM L119, G.D.U. and G.D.U. Battery Stowage.

(1) ITEM NO	(2) SMR CODE	(3) NSN	(4) CAGEC	(5) PART NUMBER	(6) DESCRIPTION AND USABLE ON CODES(UOC)	(7) QTY
					GROUP 3307 SPECIAL PURPOSE KITS	
					FIG. 449 KIT,PRIME MOVER,LT. HOWITZER,105 MM L119,G.D.U. AND G.D.U. BATTERY STOWAGE	
1	PAOZZ	5305009847343	96906	MS35191-276	SCREW,MACHINE #10-32 X 1.00,PART OF KIT P/N 57K1628..... UOC:HPM	2
2	PAOZZ	5310002514503	24617	9411893	NUT,LOCK #10-32,PART OF KIT P/N 57K1628..... UOC:HPM	10
3	PAOZZ	5310008098546	96906	MS27183-8	WASHER,FLAT #10,PART OF KIT P/N 57K1628..... UOC:HPM	4
4	PAOZZ	5340013145957	19207	12338839-1	LOOP,STRAP,FASTENER PART OF KIT P/N 57K1628..... UOC:HPM	5
5	PAOZZ	5340012032708	19207	12340529-7	STRAP,WEBBING PART OF KIT P/N 57K1628..... UOC:HPM	2
6	PAOZZ	5305009897435	96906	MS35207-264	SCREW,MACHINE #10-32 X 5/8,PART OF KIT P/N 57K1628..... UOC:HPM	2
7	PAOZZ	5305009847341	96906	MS35191-273	SCREW,MACHINE #10-32 X 5/8,PART OF KIT P/N 57K1628..... UOC:HPM	6
8	PAOZZ	5310000145850	96906	MS27183-42	WASHER,FLAT #10,PART OF KIT P/N 57K1628..... UOC:HPM	8
9	PAOZZ	5340013617879	19207	12340507-6	STRAP,WEBBING PART OF KIT P/N 57K1628..... UOC:HPM	1
10	PAOZZ	5340012552812	19207	12340529-16	STRAP,WEBBING PART OF KIT P/N 57K1628..... UOC:HPM	2

END OF FIGURE

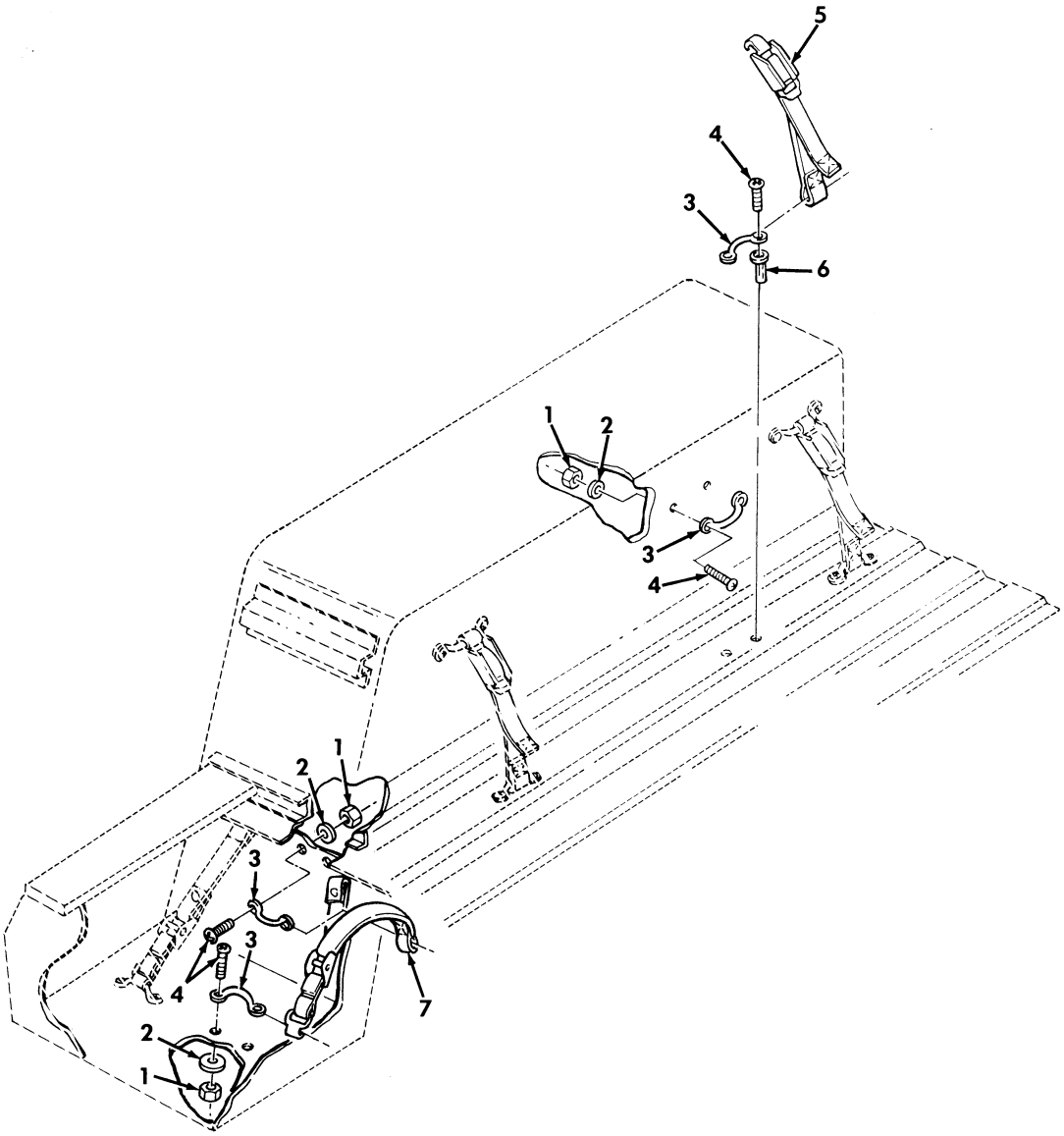

Figure 450. Kit, Prime Mover, Lt. Howitzer, 105 MM L119, Aiming Post and Cable Reel Stowage.

(1) ITEM NO	(2) SMR CODE	(3) NSN	(4) CAGEC	(5) PART NUMBER	(6) DESCRIPTION AND USABLE ON CODES(UOC)	(7) QTY
					GROUP 3307 SPECIAL PURPOSE KITS	
					FIG. 450 KIT,PRIME MOVER,LT. HOWITZER,105 MM L119,AIMIMG POST AND CABLE REEL STOWAGE	
1	PAOZZ	5310002514503	24617	9411893	NUT,LOCK #10-32,PART OF KIT P/N 57K1628..... UOC:HPM	19
2	PAOZZ	5310000145850	96906	MS27183-42	WASHER,FLAT #10,PART OF KIT P/N 57K1628..... UOC:HPM	19
3	PAOZZ	5340013145957	19207	12338839-1	LOOP,STRAP,FASTENER PART OF KIT P/N 57K1628..... UOC:HPM	10
4	PAOZZ	5305009847341	96906	MS35191-273	SCREW,MACHINE #10-32 X 5/8,PART OF KIT P/N 57K1628..... UOC:HPM	20
5	PAOZZ	5340012584529	19207	12340507-4	STRAP,WEBBING PART OF KIT P/N 57K1628..... UOC:HPM	3
6	PAOZZ	5310011981723	03481	S10P175	NUT,PLAIN,BLIND RIV #10-32,PART OF KIT P/N 57K1628..... UOC:HPM	1
7	PAOZZ	5340011985165	31272	45096-10	STRAP,WEBBING PART OF KIT P/N 57K1628..... UOC:HPM	2

END OF FIGURE

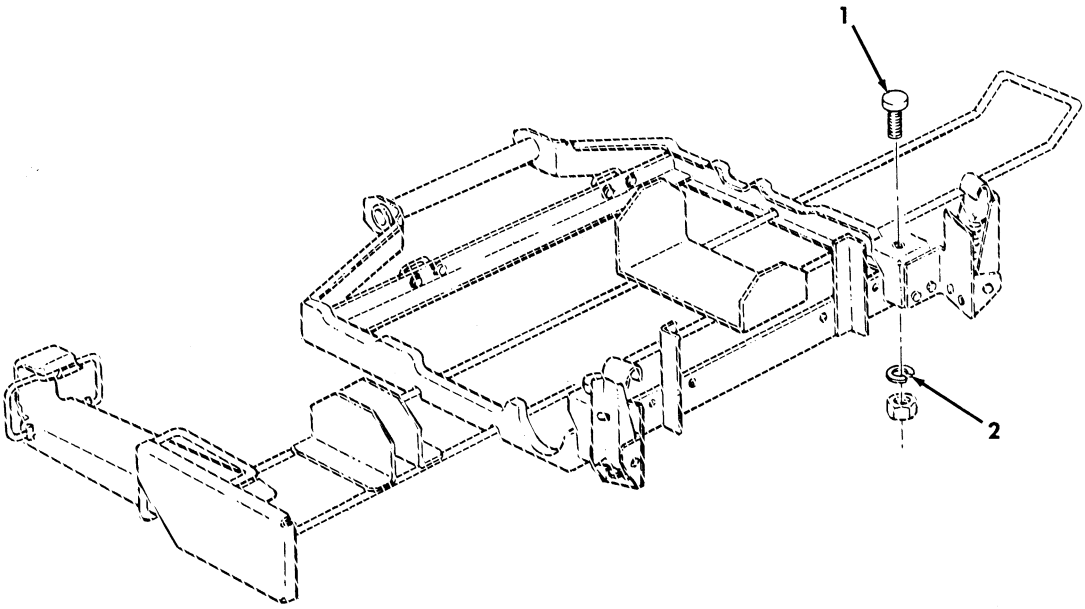

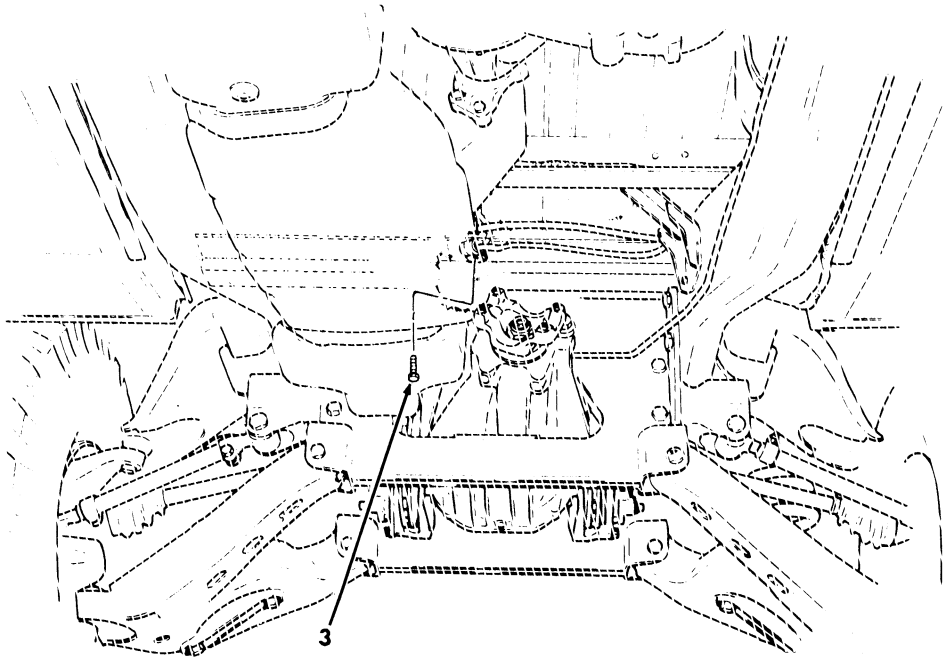

Figure 451. Kit, Prime Mover, Lt. Howitzer, 105 MM L119, Pioneer Tool Stowage Tray Hardware and Parking Brake Hardware.

(1) ITEM NO	(2) SMR CODE	(3) NSN	(4) CAGEC	(5) PART NUMBER	(6) DESCRIPTION AND USABLE ON CODES(UOC)	(7) QTY
					GROUP 3307 SPECIAL PURPOSE KITS	
					FIG. 451 KIT,PRIME MOVER,LT. HOWITZER,105 MM L119,PIONEER TOOL STOWAGE TRAY HARDWARE AND PARKING BRAKE HARDWARE	
1	PAOZZ	5340011858820	19207	12340846-1	BUMPER,NONMETALLIC PIONEER TOOL TRAY,STOP,PART OF KIT P/N 57K1628... UOC:HPM	2
2	PAOZZ	5310005825965	96906	MS35338-44	WASHER,LOCK 1/4,PART OF KIT P/N 57K1628..... UOC:HPM	2
3	PAOZZ	5305012854234	24617	9414241	SCREW,MACHINE PART OF KIT P/N 57K1628..... UOC:HPM	1
KIT	PDOZZ	2590013489748	19207	57K1628	MODIFICATION KIT,VE PRIME MOVER,LT. HOWITZER 105 MM L119..... UOC:HPM	1
					BOLT,ASSEMBLED (1) 445-4	
					BOLT,HEXAGON (1) 446-26	
					BOLT,MACHINE (2) 442-1	
					BOLT,MACHINE (12) 442-10	
					BOLT,MACHINE (4) 442-14	
					BOLT,MACHINE (4) 442-17	
					BOLT,MACHINE (8) 442-18	
					BOLT,MACHINE (2) 444-5	
					BOLT,MACHINE (10) 446-11	
					BOLT,MACHINE (6) 441-13	
					BOLT,MACHINE (6) 446-36	
					BOX,ACCESSORIES STO(1) 444-1	
					BRACKET (1) 443-8	
					BRACKET,ANGLE (1) 445-11	
					BRACKET,ANGLE (3) 446-35	
					BRACKET,DOUBLE ANGL(1) 446-34	
					BRACKET,DOUBLE ANGL(1) 443-3	
					BRACKET,DOUBLE ANGL(1) 445-6	
					BRACKET,VEHICULAR C(1) 442-3	
					BRACKET,VEHICULAR C(1) 442-6	
					BRACKET,VEHICULAT C(3) 442-6	
					BRACKET,VEHICULAR C(1) 442-3	
					BRACKET,VEHICULAR C(2) 442-9	
					BRACKET,VEHICULAR C(1) 442-11	
					BRACKET,VEHICULAR C(1) 442-15	
					BRACKET,VEHICULAR C(1) 442-19	
					BRACKET,VEHICULAR C(1) 442-11	
					BRACKET,VEHICULAR C(1) 442-19	
					BUMPER,NONMETALLIC (2) 451-1	
					BUMPER,VEHICULAR (1) 441-1	
					BUMPER,VEHICULAR (1) 442-16	
					CLAMP,BRIDGE (1) 446-33	
					CLAMP,LOOP (4) 443-4	
					CLAMP,LOOP (1) 444-7	

(1) ITEM NO	(2) SMR CODE	(3) NSN	(4) CAGEC	(5) PART NUMBER	(6) DESCRIPTION AND USABLE ON CODES(UOC)	(7) QTY
					CLAMP,LOOP (1) 445-5	
					CLAMP,LOOP (1) 445-9	
					CLIP,SPRING (4) 446-4	
					CLIP,SPRING (2) 446-2	
					CONNECTOR PLUG ELEC(2) 445-7	
					CONNECTOR PLUG ELEC(7) 445-8	
					CONTROL HANDLE,WINC(1) 444-4	
					DECAL (1) 443-18	
					FRAME SECTION,STRUC(1) 441-4	
					FRAME SECTION,STRUC(1) 441-4	
					FRAME SECTION,STRUC(1) 441-12	
					FRAME SECTION,STRUC(1) 441-12	
					HANDLE,BOW (7) 446-31	
					LOOP,FOOTMAN (2) 446-22	
					LOOP,STRAP,FASTENER(4) 448-5	
					LOOP,STRAP,FASTENER(8) 446-5	
					LOOP,STRAP,FASTENER(8) 447-2	
					LOOP,STRAP,FASTENER(5) 448-2	
					LOOP,STRAP,FASTENER(5) 449-4	
					LOOP,STRAP,FASTENER(10) 450-3	
					NUT,LOCK (24) 446-9	
					NUT,LOCK (16) 447-5	
					NUT,LOCK (6) 448-8	
					NUT,LOCK (10) 449-2	
					NUT,LOCK (19) 450-1	
					NUT,PLAIN,ASSEMBLED(3) 445-3	
					NUT,PLAIN,BLIND RIV(4) 446-21	
					NUT,PLAIN,BLIND RIV(12) 448-6	
					NUT,PLAIN,BLIND RIV(1) 450-6	
					NUT,PLAIN,HEXAGON (2) 441-10	
					NUT,PLAIN,HEXAGON (4) 442-8	
					NUT,PLAIN,HEXAGON (2) 443-1	
					NUT,SELF-LOCKING (10) 441-5	
					NUT,SELF-LOCKING (30) 442-4	
					NUT,SELF-LOCKING (2) 442-20	
					NUT,SELF-LOCKING (1) 443-14	
					NUT,SELF-LOCKING (2) 444-3	
					NUT,SELF-LOCKING (2) 445-2	
					NUT,SELF-LOCKING (14) 446-16	
					NUT,SELF-LOCKING (1) 444-9	
					NUT,SELF-LOCKING (1) 446-28	
					NUT,SELF-LOCKING,HE(6) 441-9	
					NUT,SELF-LOCKING,HE(4) 441-11	
					PIN,COTTER (1) 442-13	
					PIN,COTTER (1) 443-17	
					PLATE,INSTRUCTION (1) 448-11	
					PLATE,INSTRUCTION (1) 448-12	
					PLATE,MOUNTING (4) 442-12	
					PLATE,MOUNTING (2) 446-17	
					PLUSNUT (16) 446-24	
					RACK,AMMUNITION STO(1) 446-25	
					SCREW,CAP,HEXAGON H(6) 441-2	
					SCREW,CAP,HEXAGON H(4) 441-7	

(1) ITEM NO	(2) SMR CODE	(3) NSN	(4) CAGEC	(5) PART NUMBER	(6) DESCRIPTION AND USABLE ON CODES(UOC)	(7) QTY
					SCREW,CAP,HEXAGON H(4)	441-14
					SCREW,CAP,HEXAGON H(4)	442-5
					SCREW,CAP,HEXAGON H(3)	445-10
					SCREW,CAP,HEXAGON H(2)	445-13
					SCREW,CAP,HEXAGON H(14)	446-14
					SCREW,MACHINE (6)	448-10
					SCREW,MACHINE (2)	443-5
					SCREW,MACHINE (12)	446-3
					SCREW,MACHINE (4)	446-6
					SCREW,MACHINE (2)	446-19
					SCREW,MACHINE (10)	446-20
					SCREW,MACHINE (4)	447-3
					SCREW,MACHINE (8)	447-6
					SCREW,MACHINE (4)	447-7
					SCREW,MACHINE (4)	448-1
					SCREW,MACHINE (8)	448-4
					SCREW,MACHINE (2)	449-1
					SCREW,MACHINE (2)	449-6
					SCREW,MACHINE (6)	449-7
					SCREW,MACHINE (20)	450-4
					SCREW,MACHINE (1)	451-3
					SCREW,MACHINE (1)	444-6
					SCREW,TAPPING (1)	443-7
					SCREW,TAPPING (1)	443-9
					SCREW,TAPPING (2)	446-32
					STRAP ASSEMBLY (2)	447-1
					STRAP,RETAINING (1)	446-29
					STRAP,RETAINING (1)	448-9
					STRAP,RETAINING (2)	446-7
					STRAP,TIEDOWN,ELECT(4)	443-6
					STRAP,WEBBING (2)	446-18
					STRAP,WEBBING (1)	446-23
					STRAP,WEBBING (2)	447-4
					STRAP,WEBBING (4)	448-3
					STRAP,WEBBING (2)	449-5
					STRAP,WEBBING (2)	450-7
					STRAP,WEBBING (1)	449-9
					STRAP,WEBBING (2)	449-10
					STRAP,WEBBING (3)	450-5
					TEE,HOSE (1)	443-10
					TRAY,AMMO (1)	446-1
					TUBING,NONMETALLIC (1)	443-11
					TUBING,NONMETALLIC (1)	443-16
					WASHER,FLAT (12)	441-3
					WASHER,FLAT (18)	441-6
					WASHER,FLAT (8)	441-8
					WASHER,FLAT (4)	444-2
					WASHER,FLAT (2)	445-1
					WASHER,FLAT (16)	446-8
					WASHER,FLAT (18)	446-10
					WASHER,FLAT (4)	446-13
					WASHER,FLAT (28)	446-15
					WASHER,FLAT (2)	446-27

(1) ITEM NO	(2) SMR CODE	(3) NSN	(4) CAGEC	(5) PART NUMBER	(6) DESCRIPTION AND USABLE ON CODES(UOC)	(7) QTY
					WASHER,FLAT (4) 447-8	
					WASHER,FLAT (16) 447-9	
					WASHER,FLAT (14) 448-7	
					WASHER,FLAT (4) 449-3	
					WASHER,FLAT (8) 449-8	
					WASHER,FLAT (19) 450-2	
					WASHER,FLAT (60) 442-2	
					WASHER,LOCK (4) 442-7	
					WASHER,LOCK (2) 443-2	
					WASHER,LOCK (1) 443-13	
					WASHER,LOCK (1) 443-12	
					WASHER,LOCK (1) 444-8	
					WASHER,LOCK (16) 446-12	
					WASHER,LOCK (2) 451-2	
					WEDGE (1) 446-30	
					WINCH,DRUM,VEHICLE (1) 443-15	
					WIRING ASSEMBLY (1) 445-12	

END OF FIGURE

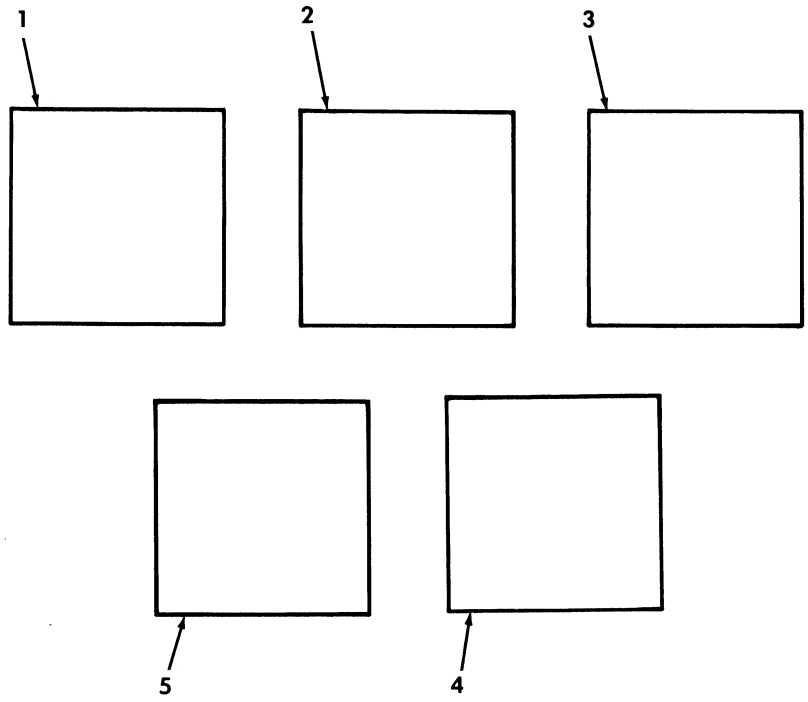

Figure 452. Kit, Towed Vulcan System.

(1) ITEM NO	(2) SMR CODE	(3) NSN	(4) CAGEC	(5) PART NUMBER	(6) DESCRIPTION AND USABLE ON CODES(UOC)	(7) QTY
					GROUP 3307 SPECIAL PURPOSE KITS	
					FIG. 452 KIT,TOWED VULCAN SYSTEM	
1	KFOZZ		19207	57K1641	KIT,CAMOUFLAGE RACK PART OF KIT P/N 57K0235..... UOC:KTV	1
2	PAOZZ	2540011853216	19207	12338105	PARTS KIT,SEAT PART OF KIT P/N 57K0235..... UOC:KTV	1
3	PAOZZ	2510012468287	19207	12338119	PANEL,BODY,VEHICULA PART OF KIT P/N 57K0235..... UOC:KTV	1
4	PAOZZ	2540013160892	19207	57K0112	COVER,FITTED,VEHICU PART OF KIT P/N 57K0235..... UOC:KTV	1
5	PAOZZ	2540011910973	19207	12340744	COVER,FITTED,VEHICU PART OF KIT P/N 57K0235..... UOC:KTV	1
KIT	PDOZZ	2590013573127	19207	57K0235	KIT,TOWED VULCAN SY..... UOC:KTV	1
					COVER,FITTED,VEHICU(1) 452-4	
					COVER,FITTED,VEHICU(1) 452-5	
					KIT,CAMOUFLAGE (1) 452-1	
					PANEL,BODY,VEHICULA(1) 452-3	
					PARTS KIT,SEAT (1) 452-2	

END OF FIGURE

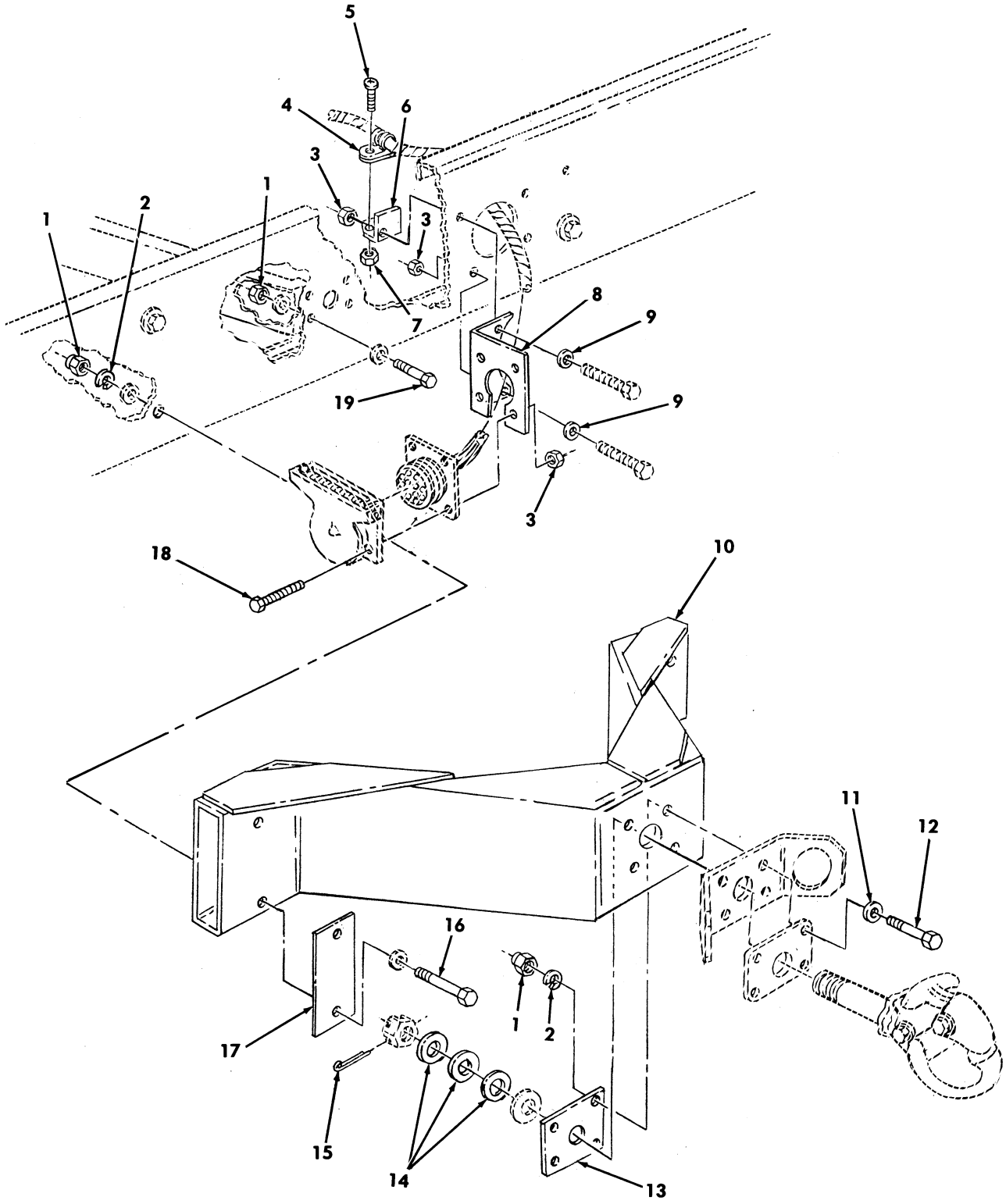

Figure 453. Kit, Pintle Extension.

(1) ITEM NO	(2) SMR CODE	(3) NSN	(4) CAGEC	(5) PART NUMBER	(6) DESCRIPTION AND USABLE ON CODES(UOC)	(7) QTY
					GROUP 3307 SPECIAL PURPOSE KITS	
					FIG. 453 KIT,PINTLE EXTENSION	
1	PAOZZ	5310004883889	96906	MS51943-39	NUT,SELF-LOCKING,HE 1/2-13 PART OF KIT P/N 57K1640..... UOC:AVY,BVY,HVY,NNN	12
2	PAOZZ	5310005845272	02978	ERNA245	WASHER,LOCK 1/2 PART OF KIT P/N 57K1640..... UOC:AVY,BVY,HVY,NNN	8
3	PAOZZ	5310011520598	24617	271172	NUT,SELF-LOCKING,AS 1/4-20 PART OF KIT P/N 57K1640..... UOC:AVY,BVY,HVY,NNN	6
4	PAOZZ	5340000572906	96906	MS21333-73	CLAMP,LOOP PART OF KIT P/N 57K1640.. UOC:AVY,BVY,HVY,NNN	1
5	PAOZZ	5305009846193	96906	MS35206-245	SCREW,MACHINE .164-32 X 1/2 PART OF KIT P/N 57K1640..... UOC:AVY,BVY,HVY,NNN	1
6	PAOZZ	5340014067418	19207	12342664	BRACKET,ANGLE PART OF KIT P/N 57K1640..... UOC:AVY,BVY,HVY,NNN	1
7	PAOZZ	5310010695243	72582	271163	NUT,PLAIN,ASSEMBLED #8-32 PART OF KIT P/N 57K1640..... UOC:AVY,BVY,HVY,NNN	1
8	PAOZZ	5340014066965	19207	12342663	BRACKET,ANGLE PART OF KIT P/N 57K1640..... UOC:AVY,BVY,HVY,NNN	1
9	PAOZZ	5310011023270	24617	2436161	WASHER,FLAT 1/4 PART OF KIT P/N 57K1640..... UOC:AVY,BVY,HVY,NNN	2
10	PAOZZ	2540014117519	19207	12342661	PINTLE EXTENSION PART OF KIT P/N 57K1640..... UOC:AVY,BVY,HVY,NNN	1
11	PAOZZ	5310011211703	06032	2310-0143-001	WASHER,FLAT 1/2 PART OF KIT P/N 57K1640..... UOC:AVY,BVY,HVY,NNN	4
12	PAOZZ	5306013601128	24617	455006	BOLT,MACHINE 1/2-13 X 3.75 PART OF KIT P/N 57K1640..... UOC:AVY,BVY,HVY,NNN	4
13	PAOZZ	5340014066964	19207	12342662	PLATE,MOUNTING PART OF KIT P/N 57K1640..... UOC:AVY,BVY,HVY,NNN	1
14	PAOZZ	5310005158776	96906	MS20002-20	WASHER,FLAT 1-1/4 X 2.125 PART OF KIT P/N 57K1640..... UOC:AVY,BVY,HVY,NNN	3
15	PAOZZ	5315008460126	80205	MS24665-628	PIN,COTTER 1/4 X 3.00 PART OF KIT P/N 57K1640..... UOC:AVY,BVY,HVY,NNN	1
16	PAOZZ	5305014114455	24617	9430516	SCREW,CAP,HEXAGON H 1/2-13 X 5-3/4 PART OF KIT P/N 57K1640..... UOC:AVY,BVY,HVY,NNN	4
17	PAOZZ	5340014077192	19207	12342665	PLATE,MOUNTING PART OF KIT P/N 57K1640.....	2

(1) ITEM NO	(2) SMR CODE	(3) NSN	(4) CAGEC	(5) PART NUMBER	(6) DESCRIPTION AND USABLE ON CODES(UOC)	(7) QTY
					UOC:AVY,BVY,HVY,NNN	
18	PAOZZ	5305010164344	96906	MS51849-95	SCREW,MACHINE 1/4-20 X 5/8 PART OF KIT P/N 57K1640.....	4
					UOC:AVY,BVY,HVY,NNN	
19	PAOZZ	5306013601125	24617	455000	BOLT,MACHINE 1/2-13 X 1.25 PART OF KIT P/N 57K1640.....	4
					UOC:AVY,BVY,HVY,NNN	
KIT	PAOZZ	5340014107036	19207	57K1640	HARDWARE KIT,MECHAN.....	1
					UOC:AVY,BVY,HVY	
					BOLT,MACHINE (4) 453-19	
					BOLT,MACHINE (4) 453-12	
					BRACKET,ANGLE (1) 453-8	
					BRACKET,ANGLE (1) 453-6	
					CLAMP,LOOP (1) 453-4	
					NUT,PLAIN,ASSEMBLED(1) 453-7	
					NUT,SELF-LOCKING,HE(12) 453-1	
					NUT,SELF-LOCKING,AS(6) 453-3	
					PIN,COTTER (1) 453-15	
					PINTLE EXTENSION (1) 453-10	
					PLATE,MOUNTING (1) 453-13	
					PLATE,MOUNTING (2) 453-17	
					SCREW,CAP,HEXAGON H(4) 453-16	
					SCREW,MACHINE (4) 453-18	
					SCREW,MACHINE (1) 453-5	
					WASHER,FLAT (3) 453-14	
					WASHER,FLAT (2) 453-9	
					WASHER,FLAT (4) 453-11	
					WASHER,LOCK (8) 453-2	

END OF FIGURE

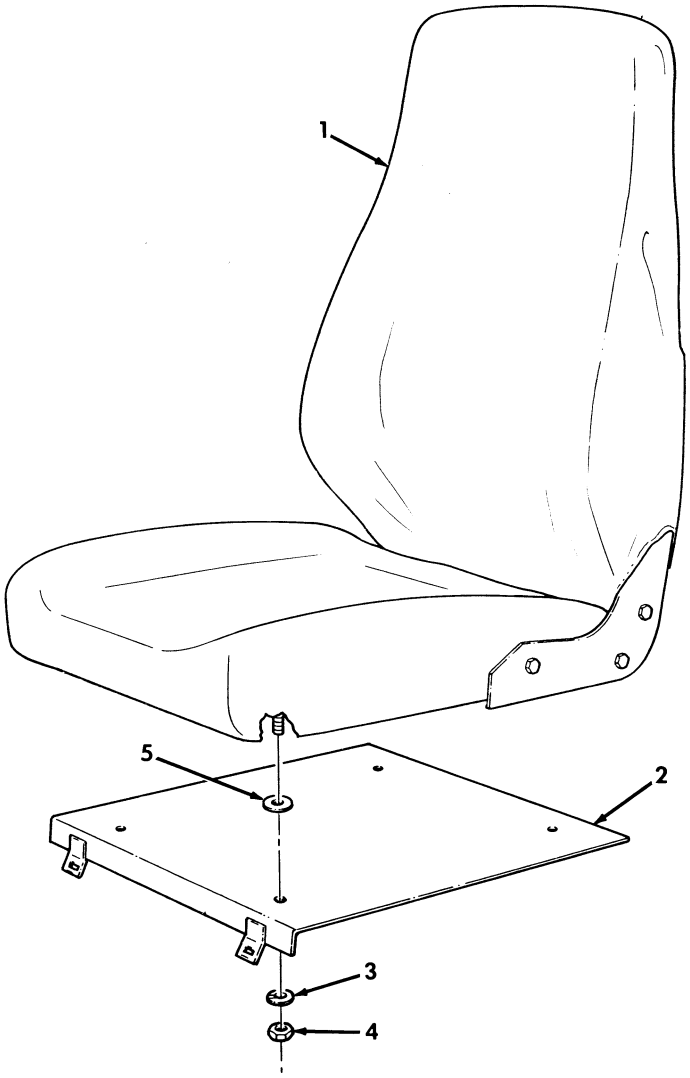

Figure 454. Kit, Rear Seat Assembly.

(1) ITEM NO	(2) SMR CODE	(3) NSN	(4) CAGEC	(5) PART NUMBER	(6) DESCRIPTION AND USABLE ON CODES(UOC)	(7) QTY
					GROUP 3307 SPECIAL PURPOSE KITS	
					FIG. 454 KIT,REAR SEAT ASSEMBLY	
1	PAOZZ	2540014364175	62226	8.6272-01	SEAT,VEHICULAR REAR PART OF KIT P/N 57K3196..... UOC:A13,A14,BVY,H13,H14,NNN	2
1	PAOZZ	2540014769353	62226	8.6272-02	SEAT,VEHICULAR REAR PART OF KIT P/N 57K3197..... UOC:A13,A14,BVY,H13,H14,NNN	2
2	PBOZZ	2540014770162	19207	12446966	PLATE,REAR SEAT,MNT LEFT,PART OF KIT P/N 57K3196,PART OF KIT P/N 57K3197..... UOC:A13,A14,BVY,H13,H14,NNN	1
2	PBOZZ	2540014770184	19207	12446967	PLATE,REAR SEAT,MNT RIGHT,PART OF KIT P/N 57K3196,PART OF KIT P/N 57K3197..... UOC:A13,A14,BVY,H13,H14,NNN	1
3	PAOZZ	5310004079566	96906	MS35338-45	WASHER,LOCK PART OF KIT P/N 57K3196, PART OF KIT P/N 57K3197..... UOC:A13,A14,BVY,H13,H14,NNN	8
4	PAOZZ	5310013815328	24617	9413583	NUT,PLAIN,HEXAGON PART OF KIT P/N 57K3196 PART OF KIT P/N 57K3197..... UOC:A13,A14,BVY,H13,H14,NNN	8
5	PAOZZ	5365013820986	19207	12343055	SPACER,RING PART OF KIT P/N 57K3196 PART OF KIT P/N 57K3197..... UOC:A13,A14,BVY,H13,H14,NNN	8
KIT	PDOZZ	2540014107035	19207	57K3196	PARTS KIT,SEAT,VEHI GREEN..... UOC:A13,A14,BVY,H13,H14,NNN	1
					PLATE,REAR (1) 454-2	
					PLATE,REAR (1) 454-2	
					NUT (8) 454-4	
					SEAT,REAR (2) 454-1	
					SPACER (8) 454-5	
					WASHER (8) 454-3	
KIT	PDOZZ	2540014107034	19207	57K3197	PARTS KIT,SEAT,VEHI TAN..... UOC:A13,A14,BVY,H13,H14,NNN	1
					PLATE,REAR (1) 454-2	
					PLATE,REAR (1) 454-2	
					NUT (8) 454-4	
					SEAT,REAR (2) 454-1	
					SPACER (8) 454-5	
					WASHER (8) 454-3	

END OF FIGURE

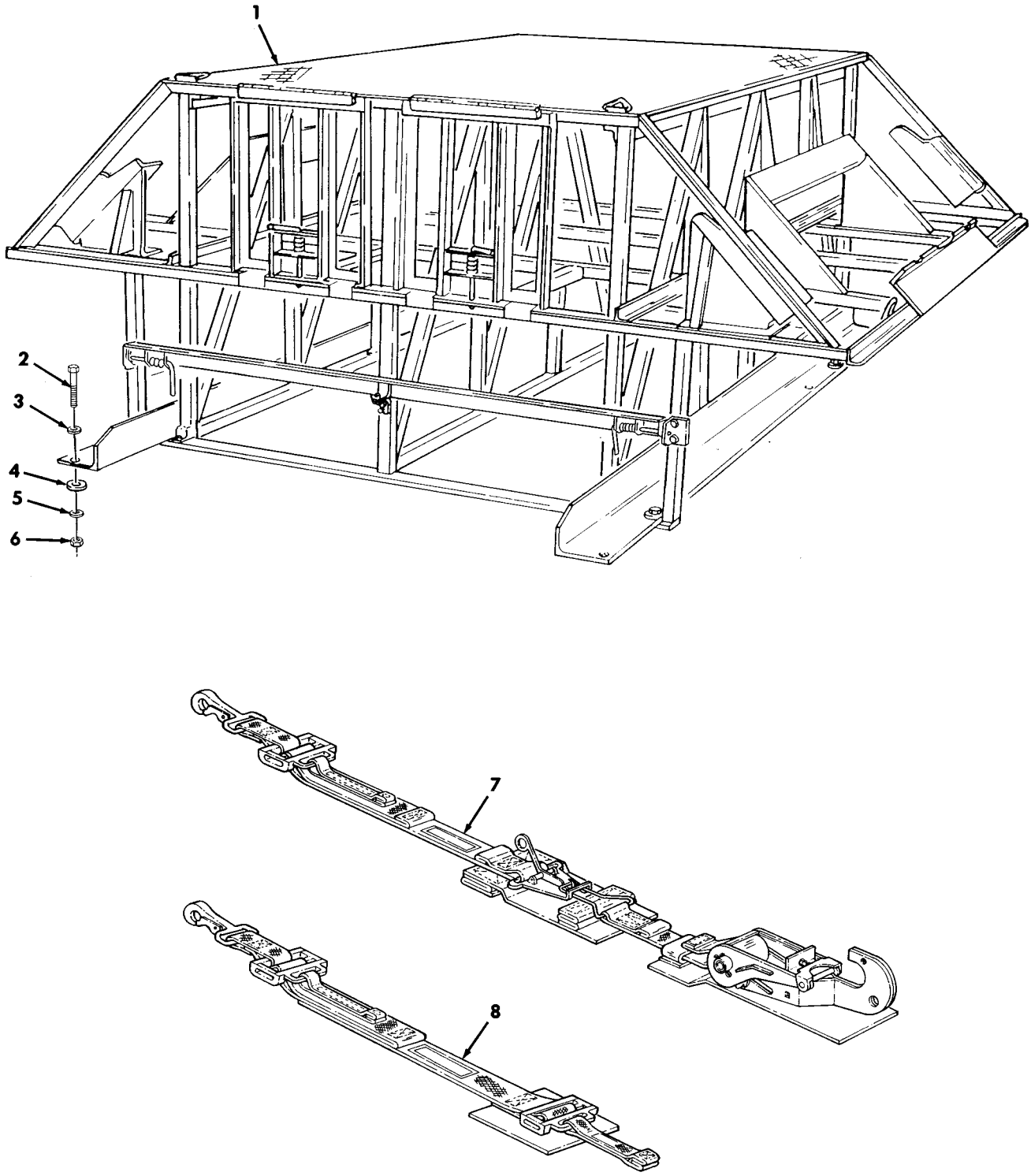

Figure 455. Kit, Man Portable Air-Defense System (MANPADS).

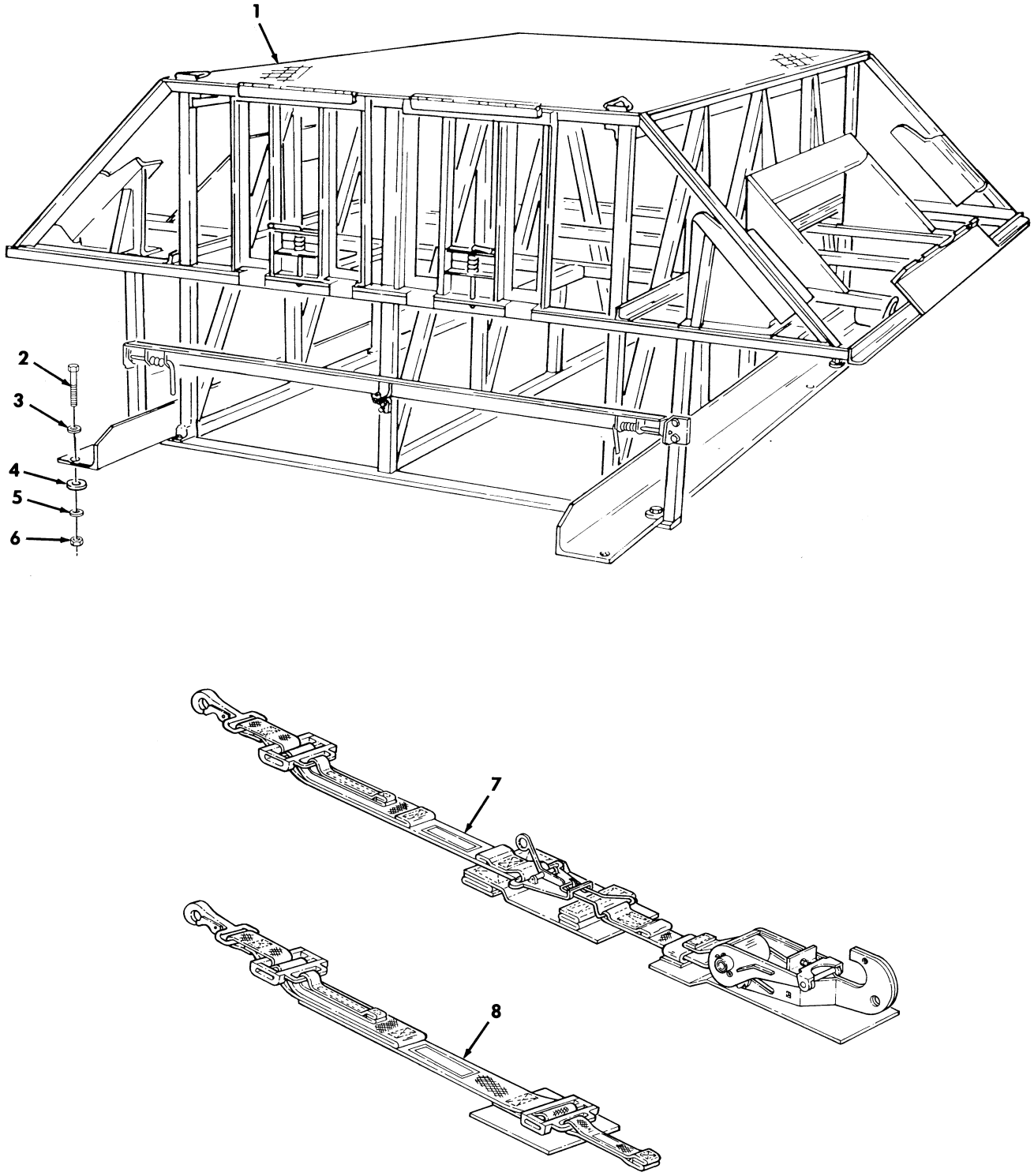

Figure 455. Kit, Man Portable Air-Defense System (MANPADS).

(1) ITEM NO	(2) SMR CODE	(3) NSN	(4) CAGEC	(5) PART NUMBER	(6) DESCRIPTION AND USABLE ON CODES(UOC)	(7) QTY
					GROUP 3307 SPECIAL PURPOSE KITS	
					FIG. 455 KIT,MAN PORTABLE AIR-DEFENSE SYSTEM (MANPADS)	
1	KFOFF		19207	12342855	RACK ASSEMBLY,MANPA PART OF KIT P/N 57K0227..... UOC:A13,A14,BVY,HVY,H13,H14,NNN	1
2	PAOZZ	5305000712071	80204	B1821BH050C200N	SCREW,CAP,HEXAGON H 1/2-13 X 2.00, PART OF KIT P/N 57K0227..... UOC:A13,A14,BVY,HVY,H13,H14,NNN	4
3	PAOZZ	5310008095998	96906	MS27183-18	WASHER,FLAT 1/2,PART OF KIT P/N 57K0227..... UOC:A13,A14,BVY,HVY,H13,H14,NNN	4
4	PAOZZ	5365014066336	19207	12342859	SPACER,RING PART OF KIT P/N 57K0227 UOC:A13,A14,BVY,HVY,H13,H14,NNN	4
5	PAOZZ	5310008093079	96906	MS27183-19	WASHER,FLAT 1/2,PART OF KIT P/N 57K0227..... UOC:A13,A14,BVY,HVY,H13,H14,NNN	4
6	PAOZZ	5310004883889	96906	MS51943-39	NUT,SELF-LOCKING,HE 1/2-13,PART OF KIT P/N 57K0227..... UOC:A13,A14,BVY,HVY,H13,H14,NNN	4
7	PAOZZ	5340014088526	19207	12342884	STRAP,WEBBING PART OF KIT P/N 57K0227..... UOC:A13,A14,BVY,HVY,H13,H14,NNN	4
8	PAOZZ	5340014067413	19207	12342883	STRAP,WEBBING PART OF KIT P/N 57K0227..... UOC:A13,A14,BVY,HVY,H13,H14,NNN	2
KIT	PDOFF	2510012744234	19207	57K0227	RACK ASSEMBLY,MANPA..... UOC:A13,A14,BVY,HVY,H13,H14,NNN	1
					NUT,SELF-LOCKING,HE(4) 455-6	
					RACK ASSEMBLY,MANPA(1) 455-1	
					SCREW,CAP,HEXAGON H(4) 455-2	
					SPACER,RING (4) 455-4	
					STRAP,WEBBING (2) 455-7	
					STRAP,WEBBING (4) 455-8	
					WASHER,FLAT (4) 455-3	
					WASHER,FLAT (4) 455-5	

END OF FIGURE

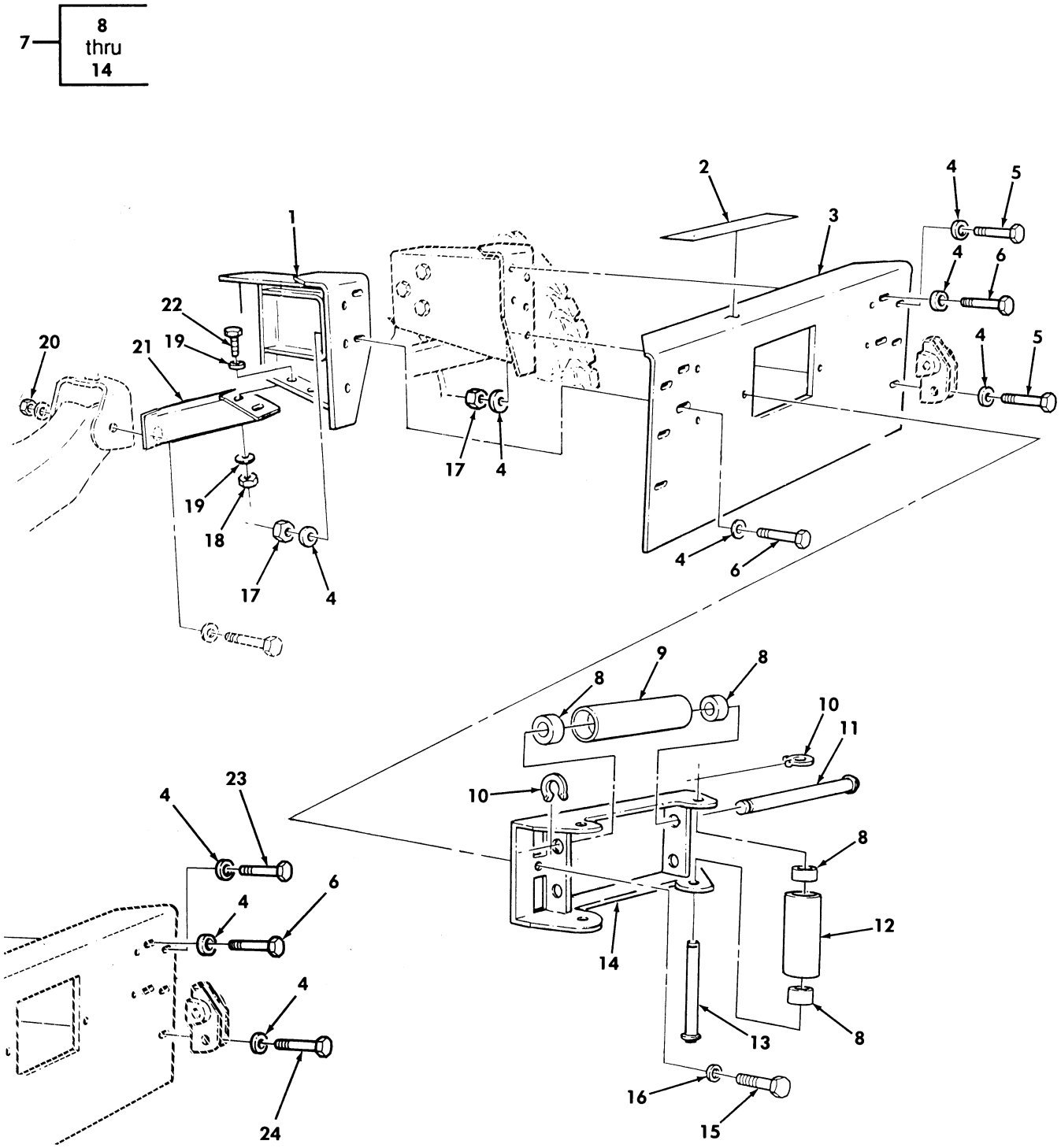

Figure 456. Kit, 9,000 Lb Winch.

(1) ITEM NO	(2) SMR CODE	(3) NSN	(4) CAGEC	(5) PART NUMBER	(6) DESCRIPTION AND USABLE ON CODES(UOC)	(7) QTY
					GROUP 3307 SPECIAL PURPOSE KITS	
					FIG. 456 KIT,9,000 LB WINCH	
1	PAOZZ	2510013581178	19207	12342387	FRAME SECTION,STRUC L.H. PART OF KIT P/N 57K0285 PART OF KIT P/N 57K3217..... UOC:AVY,A11,A13,A14,A24,A25,A26,A27, BVY,B17,B18,B24,B25,C17,HVY,H11,H13, H14,H17,H18,H21,H24,H25,H26,H27,H28, MMM,NNN	1
1	PAOZZ	2510013578789	19207	12342388	FRAME SECTION,STRUC R.H. PART OF KIT P/N 57K0285 PART OF KIT P/N 57K3217..... UOC:AVY,A11,A13,A14,A24,A25,A26,A27, BVY,B17,B18,B24,B25,C17,HVY,H11,H13, H14,H17,H18,H21,H24,H25,H26,H27,H28, MMM,NNN	1
2	PAOZZ	7690014450444	19207	12447102	MARKER,IDENTIFICATI PART OF KIT P/N 57K0285 PART OF KIT P/N 57K3217..... UOC:AVY,A11,A13,A14,A24,A25,A26,A27, BVY,B17,B18,B24,B25,C17,HVY,H11,H13, H14,H17,H18,H21,H24,H25,H26,H27,H28, MMM,NNN	1
3	PAOZZ	2540014128610	19207	12447091	BUMPER,VEHICULAR PART OF KIT P/N 57K3217..... UOC:AVY,A11,A13,A14,A24,A25,A26,A27, BVY,B17,B18,B24,B25,C17,HVY,H11,H13, H14,H17,H18,H21,H24,H25,H26,H27,H28, MMM,NNN	1
4	PAOZZ	5310011211703	06032	2310-0143-001	WASHER,FLAT 1/2 PART OF KIT P/N 57K0285 PART OF KIT P/N 57K3217..... UOC:AVY,A11,A13,A14,A24,A25,A26,A27, BVY,B17,B18,B24,B25,C17,HVY,H11,H13, H14,H17,H18,H21,H24,H25,H26,H27,H28, MMM,NNN	18
5	PAOZZ	5305000712071	80204	B1821BH050C200N	SCREW,CAP,HEXAGON H 1/2-13 X 2.00 PART OF KIT P/N 57K3217,PART OF KIT P/N57K0285..... UOC:AVY,A11,A13,A14,A24,A25,A26,A27, BVY,B17,B18,B24,B25,C17,HVY,H11,H13, H14,H17,H18,H21,H24,H25,H26,H27,H28, MMM,NNN	6
6	PAOZZ	5305000712067	80204	B1821BH050C125N	SCREW,CAP,HEXAGON H 1/2-13 X 1.25 PART OF KIT P/N 57K0285 PART OF KIT P/N 57K3217..... UOC:AVY,A11,A13,A14,A24,A25,A26,A27, BVY,B17,B18,B24,B25,C17,HVY,H11,H13, H14,H17,H18,H21,H24,H25,H26,H27,H28, MMM,NNN	4
7	PAOZZ	2590014486351	19207	12447104	BRACKET,VEHICULAR C PART OF KIT P/N 57K0285,PART OF KIT P/N 57K3217..... UOC:AVY,A11,A13,A14,A24,A25,A26,A27,	2

(1) ITEM NO	(2) SMR CODE	(3) NSN	(4) CAGEC	(5) PART NUMBER	(6) DESCRIPTION AND USABLE ON CODES(UOC)	(7) QTY
					BVY,B17,B18,B24,B25,C17,HVY,H11,H13, H14,H17,H18,H21,H24,H25,H26,H27,H28, MMM,NNN	
8	PAOZZ	3120014400043	19207	12447058	.BUSHING,SLEEVE..... UOC:AVY,A11,A13,A14,A24,A25,A26,A27, BVY,B17,B18,B24,B25,C17,HVY,H11,H13, H14,H17,H18,H21,H24,H25,H26,H27,H28, MMM,NNN	8
9	PAOZZ	3120014486269	19207	12447057-1	.ROLLER,LINEAR-ROTAR..... UOC:AVY,A11,A13,A14,A24,A25,A26,A27, BVY,B17,B18,B24,B25,C17,HVY,H11,H13, H14,H17,H18,H21,H24,H25,H26,H27,H28, MMM,NNN	2
10	PAOZZ	5325013882363	96906	MS3217-2075	.RING,RETAINING..... UOC:AVY,A11,A13,A14,A24,A25,A26,A27, BVY,B17,B18,B24,B25,C17,HVY,H11,H13, H14,H17,H18,H21,H24,H25,H26,H27,H28, MMM,NNN	8
11	PAOZZ	3040014779645	19207	12447060-1	.SHAFT,STRAIGHT..... UOC:AVY,A11,A13,A14,A24,A25,A26,A27, BVY,B17,B18,B24,B25,C17,HVY,H11,H13, H14,H17,H18,H21,H24,H25,H26,H27,H28, MMM,NNN	2
12	PAOZZ	3120014486268	19207	12447057-2	.ROLLER,LINEAR-ROTAR..... UOC:AVY,A11,A13,A14,A24,A25,A26,A27, BVY,B17,B18,B24,B25,C17,HVY,H11,H13, H14,H17,H18,H21,H24,H25,H26,H27,H28, MMM,NNN	2
13	PAOZZ	3040014443350	34623	12447060-2	.SHAFT,STRAIGHT..... UOC:AVY,A11,A13,A14,A24,A25,A26,A27, BVY,B17,B18,B24,B25,C17,HVY,H11,H13, H14,H17,H18,H21,H24,H25,H26,H27,H28, MMM,NNN	2
14	PAOZZ	2590014443399	34623	12447088	.BRACKET,VEHICULAR C..... UOC:AVY,A11,A13,A14,A24,A25,A26,A27, BVY,B17,B18,B24,B25,C17,HVY,H11,H13, H14,H17,H18,H21,H24,H25,H26,H27,H28, MMM,NNN	1
15	PAOZZ	5305006602832	96906	MS35307-389	SCREW,CAP,HEXAGON H 7/16-14 X 1.50 PART OF KIT P/N 57K0285 PART OF KIT P/N 57K3217..... UOC:AVY,A11,A13,A14,A24,A25,A26,A27, BVY,B17,B18,B24,B25,C17,HVY,H11,H13, H14,H17,H18,H21,H24,H25,H26,H27,H28, NNN,MMM	4
16	PAOZZ	5310008094085	24617	9420022	WASHER,FLAT 7/16 PART OF KIT P/N 57K0285 PART OF KIT P/N 57K3217..... UOC:AVY,A11,A13,A14,A24,A25,A26,A27, BVY,B17,B18,B24,B25,C17,HVY,H11,H13, H14,H17,H18,H21,H24,H25,H26,H27,H28, MMM,NNN	4
17	PAOZZ	5310004883889	96906	MS51943-39	NUT,SELF-LOCKING,HE 1/2-13 PART OF KIT P/N 57K0285 PART OF KIT P/N	8

(1) ITEM NO	(2) SMR CODE	(3) NSN	(4) CAGEC	(5) PART NUMBER	(6) DESCRIPTION AND USABLE ON CODES(UOC)	(7) QTY
					57K3217..... UOC:AVY,A11,A13,A14,A24,A25,A26,A27, BVY,B17,B18,B24,B25,C17,HVY,H11,H13, H14,H17,H18,H21,H24,H25,H26,H27,H28, MMM,NNN	
18	PAOZZ	5310009359021	96906	MS51943-35	NUT,SELF-LOCKING,HE 3/8-16 PART OF KIT P/N 57K0285 PART OF KIT P/N 57K3217..... UOC:AVY,A11,A13,A14,A24,A25,A26,A27, BVY,B17,B18,B24,B25,C17,HVY,H11,H13, H14,H17,H18,H21,H24,H25,H26,H27,H28, MMM,NNN	4
19	PAOZZ	5310014124013	24617	2436163	WASHER,FLAT 3/8 PART OF KIT P/N 57K0285 PART OF KIT P/N 57K3217..... UOC:AVY,A11,A13,A14,A24,A25,A26,A27, BVY,B17,B18,B24,B25,C17,HVY,H11,H13, H14,H17,H18,H21,H24,H25,H26,H27,H28, MMM,NNN	8
20	PAOZZ	5310004093333	96906	MS51943-45	NUT,SELF-LOCKING,HE 3/4-10 PART OF KIT P/N 57K0285 PART OF KIT P/N 57K3217..... UOC:AVY,A11,A13,A14,A24,A25,A26,A27, BVY,B17,B18,B24,B25,C17,HVY,H11,H13, H14,H17,H18,H21,H24,H25,H26,H27,H28, MMM,NNN	2
21	PAOZZ	2510013581176	19207	12342389	FRAME SECTION,STRUC L.H. PART OF KIT P/N 57K0285 PART OF KIT P/N 57K3217..... UOC:AVY,A11,A13,A14,A24,A25,A26,A27, BVY,B17,B18,B24,B25,C17,HVY,H11,H13, H14,H17,H18,H21,H24,H25,H26,H27,H28, MMM,NNN	1
21	PAOZZ	2510013581177	19207	12342390	FRAME SECTION,STRUC R.H. PART OF KIT P/N 57K0285 PART OF KIT P/N 57K3217..... UOC:AVY,A11,A13,A14,A24,A25,A26,A27, BVY,B17,B18,B24,B25,C17,HVY,H11,H13, H14,H17,H18,H21,H24,H25,H26,H27,H28, MMM,NNN	1
22	PAOZZ	5305009422196	80204	B1821BH038C100D	SCREW,CAP,HEXAGON H 3/8-16 X 1.00 PART OF KIT P/N 57K0285 PART OF KIT P/N 57K3217..... UOC:AVY,A11,A13,A14,A24,A25,A26,A27, BVY,B17,B18,B24,B25,C17,HVY,H11,H13, H14,H17,H18,H21,H24,H25,H26,H27,H28, MMM,NNN	4
23	PAOZZ	5305000712069	80204	B1821BH050C150N	SCREW,CAP,HEXAGON H 1/2-13 X 1.50 PART OF KIT P/N 57K0285 PART OF KIT P/N 57K3217..... UOC:AVY,A11,A13,A14,A24,A25,A26,A27, BVY,B17,B18,B24,B25,C17,HVY,H11,H13, H14,H17,H18,H21,H24,H25,H26,H27,H28, MMM,NNN	2

(1) ITEM NO	(2) SMR CODE	(3) NSN	(4) CAGEC	(5) PART NUMBER	(6) DESCRIPTION AND USABLE ON CODES(UOC)	(7) QTY
24	PAOZZ	5305000712070	80204	B1821BH050C175N	SCREW,CAP,HEXAGON H 1/2-13 X 1.75 PART OF KIT P/N 57K0285 PART OF KIT P/N 57K3217..... UOC:AVY,A11,A13,A14,A24,A25,A26,A27, BVY,B17,B18,B24,B25,C17,HVY,H11,H13, H14,H17,H18,H21,H24,H25,H26,H27,H28, MMM,NNN	4

END OF FIGURE

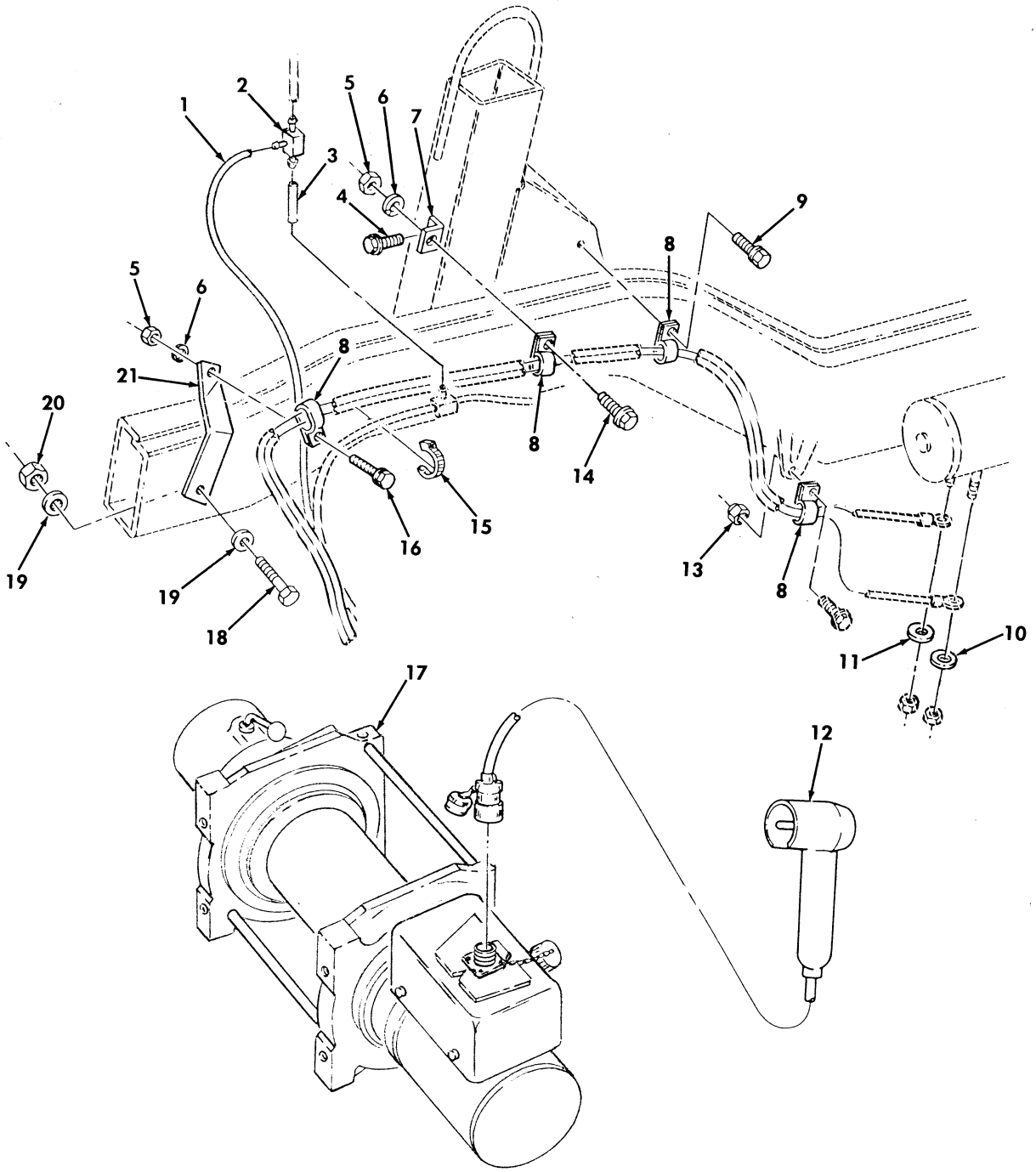

Figure 457. Kit, 9,000 Lb. Winch.

(1) ITEM NO	(2) SMR CODE	(3) NSN	(4) CAGEC	(5) PART NUMBER	(6) DESCRIPTION AND USABLE ON CODES(UOC)	(7) QTY
					GROUP 3307 SPECIAL PURPOSE KITS	
					FIG. 457 KIT,9,000 LB WINCH	
1	MOOZZ		19207	CPR104420-1-70	TUBING,NONMETALLIC MAKE FROM TUBING ,P/N CPR104420-1,70 INCHES LONG,PART OF KIT P/N 57K3217,PART OF KIT P/N 57K0285..... UOC:AVY,A11,A13,A14,A24,A25,A26,A27, BVY,B17,B18,B24,B25,C17,HVY,H11,H13, H14,H17,H18,H21,H24,H25,H26,H27,H28, MMM,NNN	1
2	PAOZZ	4730010035105	19207	12339973-1	TEE,HOSE PART OF KIT P/N 57K3217, PART OF KIT P/N 57K0285..... UOC:AVY,A11,A13,A14,A24,A25,A26,A27, BVY,B17,B18,B24,B25,C17,HVY,H11,H13, H14,H17,H18,H21,H24,H25,H26,H27,H28, MMM,NNN	1
3	MOOZZ		19207	CPR104420-1-4	TUBING,NONMETALLIC MAKE FROM TUBING ,P/N CPR104420-1,4 INCHES LONG,PART OF KIT P/N 57K3217,PART OF KIT P/N 57K0285..... UOC:AVY,A11,A13,A14,A24,A25,A26,A27, BVY,B17,B18,B24,B25,C17,HVY,H11,H13, H14,H17,H18,H21,H24,H25,H26,H27,H28, MMM,NNN	1
4	PAOZZ	5305011013312	96906	MS51851-126	SCREW,TAPPING 3/8-16 X 3/4,PART OF KIT P/N 57K3217,PART OF KIT P/N 57K0285..... UOC:AVY,A11,A13,A14,A24,A25,A26,A27, BVY,B17,B18,B24,B25,C17,HVY,H11,H13, H14,H17,H18,H21,H24,H25,H26,H27,H28, MMM,NNN	1
5	PAOZZ	5310009050762	96906	MS51967-3	NUT,PLAIN,HEXAGON 1/4-20,PART OF KIT P/N 57K3217,PART OF KIT P/N 57K0285..... UOC:AVY,A11,A13,A14,A24,A25,A26,A27, BVY,B17,B18,B24,B25,C17,HVY,H11,H13, H14,H17,H18,H21,H24,H25,H26,H27,H28, MMM,NNN	2
6	PAOZZ	5310005432705	96906	MS35338-27	WASHER,LOCK 1/4,PART OF KIT P/N 57K3217,PART OF KIT 57K0285..... UOC:AVY,A11,A13,A14,A24,A25,A26,A27, BVY,B17,B18,B24,B25,C17,HVY,H11,H13, H14,H17,H18,H21,H24,H25,H26,H27,H28, MMM,NNN	2
7	PAOZZ	5340011922256	19207	12338663	BRACKET,ANGLE PART OF KIT P/N 57K3217,PART OF KIT P/N 57K0285..... UOC:AVY,A11,A13,A14,A24,A25,A26,A27, BVY,B17,B18,B24,B25,C17,HVY,H11,H13, H14,H17,H18,H21,H24,H25,H26,H27,H28, MMM,NNN	1
8	PAOZZ	5340007385182	19207	7385182	CLAMP,LOOP PART OF KIT P/N 57K3217,	4

(1) ITEM NO	(2) SMR CODE	(3) NSN	(4) CAGEC	(5) PART NUMBER	(6) DESCRIPTION AND USABLE ON CODES(UOC)	(7) QTY
					PART OF KIT P/N 57K0285..... UOC:AVY,A11,A13,A14,A24,A25,A26,A27, BVY,B17,B18,B24,B25,C17,HVY,H11,H13, H14,H17,H18,H21,H24,H25,H26,H27,H28, MMM,NNN	
9	PAOZZ	5305001913640	96906	MS51851-85	SCREW,TAPPING 1/4-20 X 5/8,PART OF KIT P/N 57K3217,PART OF KIT P/N 57K0285..... UOC:AVY,A11,A13,A14,A24,A25,A26,A27, BVY,B17,B18,B24,B25,C17,HVY,H11,H13, H14,H17,H18,H21,H24,H25,H26,H27,H28, MMM,NNN	1
10	PAOZZ	5310012187137	96906	MS51415-7	WASHER,LOCK 3/8,PART OF KIT P/N 57K3217,PART OF KIT P/N 57K0285..... UOC:AVY,A11,A13,A14,A24,A25,A26,A27, BVY,B17,B18,B24,B25,C17,HVY,H11,H13, H14,H17,H18,H21,H24,H25,H26,H27,H28, MMM,NNN	1
11	PAOZZ	5310012167390	96906	MS51415-9	WASHER,LOCK 1/2,PART OF KIT P/N 57K3217,PART OF KIT P/N 57K0285..... UOC:AVY,A11,A13,A14,A24,A25,A26,A27, BVY,B17,B18,B24,B25,C17,HVY,H11,H13, H14,H17,H18,H21,H24,H25,H26,H27,H28, MMM,NNN	1
12	PAOZZ	2590014481105	34623	12447171	HANDLE ASSEMBLY,CON PART OF KIT P/N 57K3217,PART OF KIT P/N 57K0285..... UOC:AVY,A11,A13,A14,A24,A25,A26,A27, BVY,B17,B18,B24,B25,C17,HVY,H11,H13, H14,H17,H18,H21,H24,H25,H26,H27,H28, MMM,NNN	1
13	PAOZZ	5310011520598	24617	271172	NUT,SELF-LOCKING,AS 1/4-20,PART OF KIT P/N 57K3217,PART OF KIT P/N 57K0285..... UOC:AVY,A11,A13,A14,A24,A25,A26,A27, BVY,B17,B18,B24,B25,C17,HVY,H11,H13, H14,H17,H18,H21,H24,H25,H26,H27,H28, MMM,NNN	1
14	PAOZZ	5305000680508	80204	B1821BH025C075N	SCREW,CAP,HEXAGON H 1/4-20 X 3/4, PART OF KIT P/N 57K3217,PART OF KIT P/N 57K0285..... UOC:AVY,A11,A13,A14,A24,A25,A26,A27, BVY,B17,B18,B24,B25,C17,HVY,H11,H13, H14,H17,H18,H21,H24,H25,H26,H27,H28, MMM,NNN	1
15	PAOZZ	5975009856630	96906	MS3367-3-0	STRAP,TIEDOWN,ELECT PART OF KIT P/N 57K3217,PART OF KIT P/N 57K0285..... UOC:AVY,A11,A13,A14,A24,A25,A26,A27, BVY,B17,B18,B24,B25,C17,HVY,H11,H13, H14,H17,H18,H21,H24,H25,H26,H27,H28, MMM,NNN	4
16	PAOZZ	5305004890743	24617	9415477	SCREW,CAP,HEXAGON H 1/4-20 X 3/4, PART OF KIT P/N 57K3217,PART OF KIT P/N 57K0285.....	1

(1) ITEM NO	(2) SMR CODE	(3) NSN	(4) CAGEC	(5) PART NUMBER	(6) DESCRIPTION AND USABLE ON CODES(UOC)	(7) QTY
					UOC:AVY,A11,A13,A14,A24,A25,A26,A27, BVY,B17,B18,B24,B25,C17,HVY,H11,H13, H14,H17,H18,H21,H24,H25,H26,H27,H28, MMM,NNN	
17	PAOFF		19207	12446808	WINCH 9000 LB,PART OF KIT P/N 57K3217,PART OF KIT P/N 57K0285..... UOC:AVY,A11,A13,A14,A24,A25,A26,A27, BVY,B17,B18,B24,B25,C17,HVY,H11,H13, H14,H17,H18,H21,H24,H25,H26,H27,H28, MMM,NNN	1
18	PAOZZ	5305007247248	80204	B1821BH063C375N	SCREW,CAP,HEXAGON H 5/8-11 X 3.75, PART OF KIT P/N 57K3217,PART OF KIT P/N 57K0285..... UOC:AVY,A11,A13,A14,A24,A25,A26,A27, BVY,B17,B18,B24,B25,C17,HVY,H11,H13, H14,H17,H18,H21,H24,H25,H26,H27,H28, MMM,NNN	6
19	PAOZZ	5310011517347	24617	2436167	WASHER,FLAT 5/8,PART OF KIT P/N 57K3217,PART OF KIT P/N 57K0285..... UOC:AVY,A11,A13,A14,A24,A25,A26,A27, BVY,B17,B18,B24,B25,C17,HVY,H11,H13, H14,H17,H18,H21,H24,H25,H26,H27,H28, MMM,NNN	12
20	PAOZZ	5310000614651	96906	MS51943-43	NUT,SELF-LOCKING,HE 5/8-11,PART OF KIT P/N 57K3217,PART OF KIT P/N 57K0285..... UOC:AVY,A11,A13,A14,A24,A25,A26,A27, BVY,B17,B18,B24,B25,C17,HVY,H11,H13, H14,H17,H18,H21,H24,H25,H26,H27,H28, MMM,NNN	6
21	PAOZZ	5340012669173	19207	12338481	BRACKET,DOUBLE ANGL PART OF KIT P/N 57K3217,PART OF KIT P/N 57K0285..... UOC:AVY,A11,A13,A14,A24,A25,A26,A27, BVY,B17,B18,B24,B25,C17,HVY,H11,H13, H14,H17,H18,H21,H24,H25,H26,H27,H28, MMM,NNN	1
KIT	PDOZZ	2590014180310	19207	57K0285	ACCESSORY KIT,WINCH 9000 LB..... UOC:BVY,B24,B25,C17,NNN	1
					BRACKET (1) 457-7	
					BRACKET,DOUBLE ANGL(1) 457-21	
					BRACKET,WIRE ROPE G(1) 456-7	
					CLAMP,LOOP (4) 457-8	
					DECAL,WARNING (1) 456-2	
					FRAME SECTION,STRUC(1) 456-1	
					FRAME SECTION,STRUC(1) 456-1	
					FRAME SECTION,STRUC(1) 456-21	
					FRAME SECTION,STRUC(1) 456-21	
					HANDLE ASSEMBLY,CON(1) 457-12	
					NUT,PLAIN,HEXAGON (2) 457-5	
					NUT,SELF-LOCKING,AS(1) 457-13	
					NUT,SELF-LOCKING,HE(4) 456-18	
					NUT,SELF-LOCKING,HE(8) 456-17	
					NUT,SELF-LOCKING,HE(6) 457-20	

(1) ITEM NO	(2) SMR CODE	(3) NSN	(4) CAGEC	(5) PART NUMBER	(6) DESCRIPTION AND USABLE ON CODES(UOC)	(7) QTY
					NUT,SELF-LOCKING,HE(2) 456-20	
					SCREW,CAP,HEXAGON H(1) 457-16	
					SCREW,CAP,HEXAGON H(6) 456-5	
					SCREW,CAP,HEXAGON H(4) 456-15	
					SCREW,CAP,HEXAGON H(4) 456-22	
					SCREW,CAP,HEXAGON H(2) 456-23	
					SCREW,CAP,HEXAGON H(4) 456-24	
					SCREW,CAP,HEXAGON H(1) 457-14	
					SCREW,CAP,HEXAGON H(4) 456-6	
					SCREW,CAP,HEXAGON H(6) 457-18	
					SCREW,TAPPING (1) 457-9	
					SCREW,TAPPING (1) 457-4	
					STRAP,TIEDOWN,ELECT(4) 457-15	
					TEE,HOSE (1) 457-2	
					TUBING,NONMETALLIC (1) 457-1	
					TUBING,NONMETALLIC (1) 457-3	
					WASHER,FLAT (8) 456-19	
					WASHER,FLAT (4) 456-16	
					WASHER,FLAT (18) 456-4	
					WASHER,FLAT (12) 457-19	
					WASHER,LOCK (1) 457-11	
					WASHER,LOCK (1) 457-10	
					WASHER,LOCK (2) 457-6	
					WINCH (1) 457-17	
	PDOZZ	2590014182135	19207	57K3217	ACCESSORY KIT,WINCH 9000 LB.....	1
					UOC:AVY,A11,A13,A14,A24,A25,A26,A27, B17,B18,HVY,H11,H13,H14,H17,H18,H21, H24,H25,H26,H27,H28,MMM	
					BRACKET (1) 457-7	
					BRACKET,DOUBLE ANGL(1) 457-21	
					BRACKET,WIRE ROPE G(1) 456-7	
					BUMPER,FRONT (1) 456-3	
					CLAMP,LOOP (4) 457-8	
					DECAL,WARNING (1) 456-2	
					FRAME SECTION,STRUC(1) 456-1	
					FRAME SECTION,STRUC(1) 456-1	
					FRAME SECTION,STRUC(1) 456-21	
					FRAME SECTION,STRUC(1) 456-21	
					HANDLE ASSEMBLY,CON(1) 457-12	
					NUT,PLAIN,HEXAGON (2) 457-5	
					NUT,SELF-LOCKING,AS(1) 457-13	
					NUT,SELF-LOCKING,HE(4) 456-18	
					NUT,SELF-LOCKING,HE(8) 456-17	
					NUT,SELF-LOCKING,HE(6) 457-20	
					NUT,SELF-LOCKING,HE(2) 456-20	
					SCREW,CAP,HEXAGON H(6) 456-5	
					SCREW,CAP,HEXAGON H(1) 457-16	
					SCREW,CAP,HEXAGON H(4) 456-15	
					SCREW,CAP,HEXAGON H(4) 456-22	
					SCREW,CAP,HEXAGON H(2) 456-23	
					SCREW,CAP,HEXAGON H(4) 456-24	
					SCREW,CAP,HEXAGON H(1) 457-14	
					SCREW,CAP,HEXAGON H(4) 456-6	

(1) ITEM NO	(2) SMR CODE	(3) NSN	(4) CAGEC	(5) PART NUMBER	(6) DESCRIPTION AND USABLE ON CODES(UOC)	(7) QTY
					SCREW,CAP,HEXAGON H(6)	457-18
					SCREW,TAPPING (1)	457-9
					SCREW,TAPPING (1)	457-4
					STRAP,TIEDOWN,ELECT(4)	457-15
					TEE,HOSE (1)	457-2
					TUBING,NONMETALLIC (1)	457-1
					TUBING,NONMETALLIC (1)	457-3
					WASHER,FLAT (8)	456-19
					WASHER,FLAT (4)	456-16
					WASHER,FLAT (18)	456-4
					WASHER,FLAT (12)	457-19
					WASHER,LOCK (1)	457-11
					WASHER,LOCK (1)	457-10
					WASHER,LOCK (2)	457-6
					WINCH (1)	457-17

END OF FIGURE

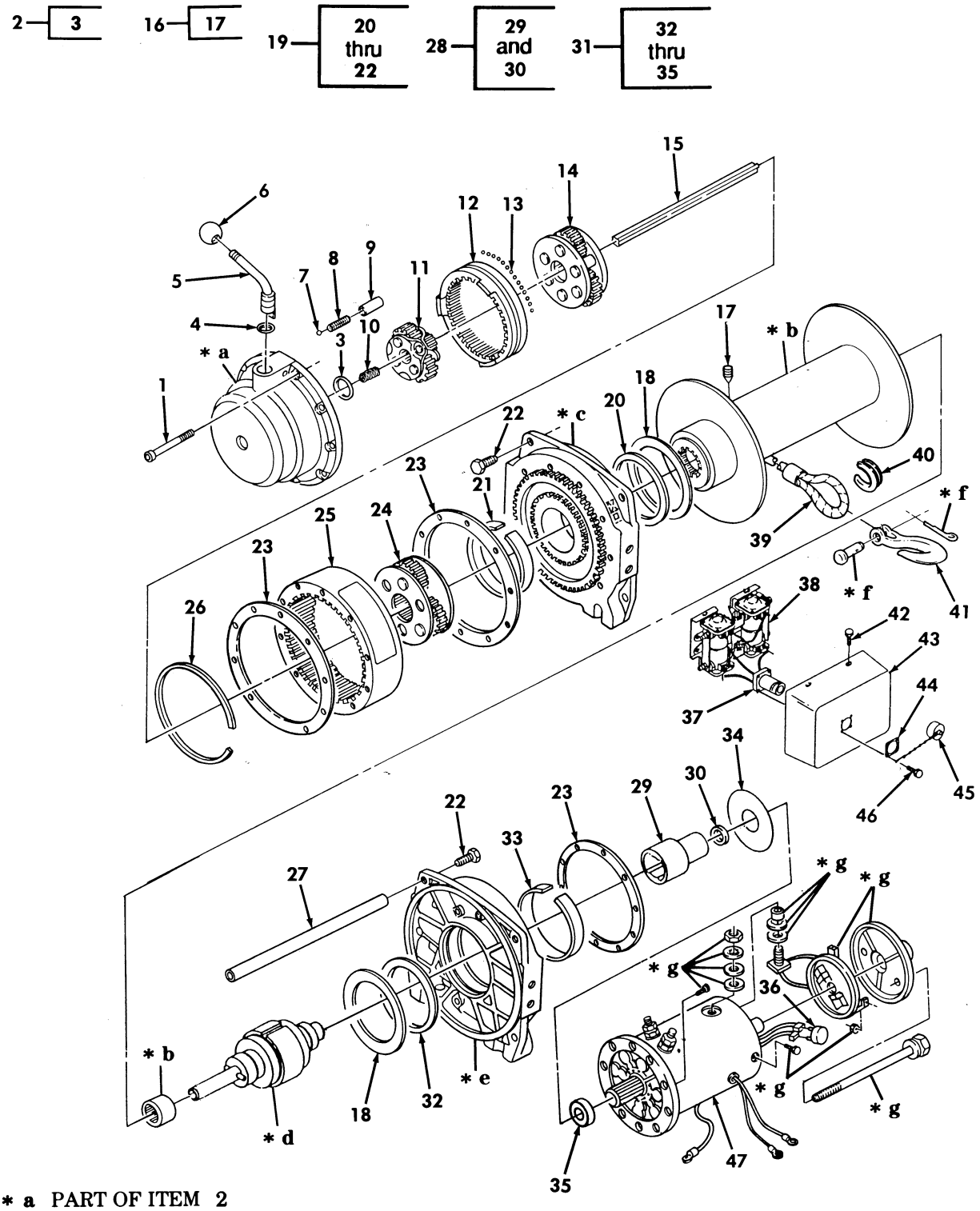

* a PART OF ITEM 2
* b PART OF ITEM 16
* c PART OF ITEM 19
* d PART OF ITEM 28
* e PART OF ITEM 31
* f PART OF ITEM 41
* g PART OF ITEM 47

Figure 458. 9,000 Lb Winch Assembly.

(1) ITEM NO	(2) SMR CODE	(3) NSN	(4) CAGEC	(5) PART NUMBER	(6) DESCRIPTION AND USABLE ON CODES(UOC)	(7) QTY
					GROUP 3307 SPECIAL PURPOSE KITS	
					FIG. 458 9,000 LB WINCH ASSEMBLY	
1	PAFZZ	5305013091521	27647	15603	SCREW,CAP,SOCKET HE 1/4-20 X 3.00.. UOC:AVY,A11,A13,A14,A24,A25,A26,A27, BVY,B17,B18,B24,B25,C17,HVY,H11,H13, H14,H17,H18,H21,H24,H25,H26,H27,H28, MMM,NNN	10
2	PAFZZ	3040014441756	27647	34384	HOUSING,MECHANICAL..... UOC:AVY,A11,A13,A14,A24,A25,A26,A27, BVY,B17,B18,B24,B25,C17,HVY,H11,H13, H14,H17,H18,H21,H24,H25,H26,H27,H28, MMM,NNN	1
3	PAFZZ	3040013076157	27647	21009	.THRUST PLATE,CLUTCH..... UOC:AVY,A11,A13,A14,A24,A25,A26,A27, BVY,B17,B18,B24,B25,C17,HVY,H11,H13, H14,H17,H18,H21,H24,H25,H26,H27,H28, MMM,NNN	1
4	PAFZZ	5330014455285	27647	15605	O-RING..... UOC:AVY,A11,A13,A14,A24,A25,A26,A27, BVY,B17,B18,B24,B25,C17,HVY,H11,H13, H14,H17,H18,H21,H24,H25,H26,H27,H28, MMM,NNN	1
5	PAFZZ	3040014463689	27647	31262	LEVER,MANUAL CONTRO..... UOC:AVY,A11,A13,A14,A24,A25,A26,A27, BVY,B17,B18,B24,B25,C17,HVY,H11,H13, H14,H17,H18,H21,H24,H25,H26,H27,H28, MMM,NNN	1
6	PAFZZ	5355012116991	27647	15604	KNOB..... UOC:AVY,A11,A13,A14,A24,A25,A26,A27, BVY,B17,B18,B24,B25,C17,HVY,H11,H13, H14,H17,H18,H21,H24,H25,H26,H27,H28, MMM,NNN	1
7	PAFZZ	3110014444020	27647	1834	BALL,BEARING 1/4 DIA..... UOC:AVY,A11,A13,A14,A24,A25,A26,A27, BVY,B17,B18,B24,B25,C17,HVY,H11,H13, H14,H17,H18,H21,H24,H25,H26,H27,H28, MMM,NNN	1
8	PAFZZ	5360014200480	27646	1833	SPRING,HELICAL,COMP..... UOC:AVY,A11,A13,A14,A24,A25,A26,A27, BVY,B17,B18,B24,B25,C17,HVY,H11,H13, H14,H17,H18,H21,H24,H25,H26,H27,H28, MMM,NNN	1
9	PAFZZ	5365013069955	27647	15686	SPACER,SLEEVE..... UOC:AVY,A11,A13,A14,A24,A25,A26,A27, BVY,B17,B18,B24,B25,C17,HVY,H11,H13, H14,H17,H18,H21,H24,H25,H26,H27,H28, MMM,NNN	1
10	PAFZZ	3020014441359	27647	24832	GEAR,SPUR..... UOC:AVY,A11,A13,A14,A24,A25,A26,A27, BVY,B17,B18,B24,B25,C17,HVY,H11,H13, H14,H17,H18,H21,H24,H25,H26,H27,H28,	

(1) ITEM NO	(2) SMR CODE	(3) NSN	(4) CAGEC	(5) PART NUMBER	(6) DESCRIPTION AND USABLE ON CODES(UOC)	(7) QTY
					MMM,NNN	
11	PAFZZ	3010014444018	27647	15643	CARRIER,GEAR ASSEMB..... UOC:AVY,A11,A13,A14,A24,A25,A26,A27, BVY,B17,B18,B24,B25,C17,HVY,H11,H13, H14,H17,H18,H21,H24,H25,H26,H27,H28, MMM,NNN	1
12	PAFZZ	3020014464387	27647	14916	GEAR,INTERNAL..... UOC:AVY,A11,A13,A14,A24,A25,A26,A27, BVY,B17,B18,B24,B25,C17,HVY,H11,H13, H14,H17,H18,H21,H24,H25,H26,H27,H28, MMM,NNN	1
13	PAFZZ	3110014444100	27647	22350	BALL,BEARING 3/16 DIA (85 BALLS)... UOC:AVY,A11,A13,A14,A24,A25,A26,A27, BVY,B17,B18,B24,B25,C17,HVY,H11,H13, H14,H17,H18,H21,H24,H25,H26,H27,H28, MMM,NNN	1
14	PAFZZ	3010014444019	27647	24563	CARRIER,GEAR ASSEMB..... UOC:AVY,A11,A13,A14,A24,A25,A26,A27, BVY,B17,B18,B24,B25,C17,HVY,H11,H13, H14,H17,H18,H21,H24,H25,H26,H27,H28, MMM,NNN	1
15	PAFZZ	3040014463684	27647	32209	SHAFT,STRAIGHT OUTPUT..... UOC:AVY,A11,A13,A14,A24,A25,A26,A27, BVY,B17,B18,B24,B25,C17,HVY,H11,H13, H14,H17,H18,H21,H24,H25,H26,H27,H28, MMM,NNN	1
16	PAFZZ	2590014465962	27647	32231	REEL,CABLE..... UOC:AVY,A11,A13,A14,A24,A25,A26,A27, BVY,B17,B18,B24,B25,C17,HVY,H11,H13, H14,H17,H18,H21,H24,H25,H26,H27,H28, MMM,NNN	1
17	PAFZZ	5305014485074	27647	36974	.SETSCREW M10..... UOC:AVY,A11,A13,A14,A24,A25,A26,A27, BVY,B17,B18,B24,B25,C17,HVY,H11,H13, H14,H17,H18,H21,H24,H25,H26,H27,H28, MMM,NNN	1
18	PAFZZ	3120014478663	27647	30277	BEARING,WASHER,THRU..... UOC:AVY,A11,A13,A14,A24,A25,A26,A27, BVY,B17,B18,B24,B25,C17,HVY,H11,H13, H14,H17,H18,H21,H24,H25,H26,H27,H28, MMM,NNN	2
19	PAFZZ	2590014465957	27647	32237	HOLDER,CABLE REEL..... UOC:AVY,A11,A13,A14,A24,A25,A26,A27, BVY,B17,B18,B24,B25,C17,HVY,H11,H13, H14,H17,H18,H21,H24,H25,H26,H27,H28, MMM,NNN	1
20	PAFZA	5330014464696	27647	30275	.PACKING ASSEMBLY..... UOC:AVY,A11,A13,A14,A24,A25,A26,A27, BVY,B17,B18,B24,B25,C17,HVY,H11,H13, H14,H17,H18,H21,H24,H25,H26,H27,H28, MMM,NNN	2
21	PAFZZ	3120014478658	27647	30274	.BUSHING,SLEEVE..... UOC:AVY,A11,A13,A14,A24,A25,A26,A27,	2

(1) ITEM NO	(2) SMR CODE	(3) NSN	(4) CAGEC	(5) PART NUMBER	(6) DESCRIPTION AND USABLE ON CODES(UOC)	(7) QTY
					BVY,B17,B18,B24,B25,C17,HVY,H11,H13, H14,H17,H18,H21,H24,H25,H26,H27,H28, MMM,NNN	
22	PAFZZ	5305014485080	27647	30328	.SCREW,MACHINE 3/8-16 X .75..... UOC:AVY,A11,A13,A14,A24,A25,A26,A27, BVY,B17,B18,B24,B25,C17,HVY,H11,H13, H14,H17,H18,H21,H24,H25,H26,H27,H28, MMM,NNN	6
23	PAFZZ	5330013067887	27647	14964	GASKET..... UOC:AVY,A11,A13,A14,A24,A25,A26,A27, BVY,B17,B18,B24,B25,C17,HVY,H11,H13, H14,H17,H18,H21,H24,H25,H26,H27,H28, MMM,NNN	3
24	PAFZZ	3010013064113	27647	15647	GEAR ASSEMBLY,SPEED..... UOC:AVY,A11,A13,A14,A24,A25,A26,A27, BVY,B17,B18,B24,B25,C17,HVY,H11,H13, H14,H17,H18,H21,H24,H25,H26,H27,H28, MMM,NNN	1
25	PAFZZ	3020014463695	27647	32239	GEAR,INTERNAL..... UOC:AVY,A11,A13,A14,A24,A25,A26,A27, BVY,B17,B18,B24,B25,C17,HVY,H11,H13, H14,H17,H18,H21,H24,H25,H26,H27,H28, MMM,NNN	1
26	PAFZZ	5365014266643	27647	30326	SPACER,RING..... UOC:AVY,A11,A13,A14,A24,A25,A26,A27, BVY,B17,B18,B24,B25,C17,HVY,H11,H13, H14,H17,H18,H21,H24,H25,H26,H27,H28, MMM,NNN	1
27	PAFZZ	5365014340186	27647	32208	SPACER,SLEEVE..... UOC:AVY,A11,A13,A14,A24,A25,A26,A27, BVY,B17,B18,B24,B25,C17,HVY,H11,H13, H14,H17,H18,H21,H24,H25,H26,H27,H28, MMM,NNN	3
28	PAFZZ	3950014351632	34623	5714499	BRAKE AND CLUTCH AS ELECTRIC..... UOC:AVY,A11,A13,A14,A24,A25,A26,A27, BVY,B17,B18,B24,B25,C17,HVY,H11,H13, H14,H17,H18,H21,H24,H25,H26,H27,H28, MMM,NNN	1
29	PAFZZ	3010014295333	27647	30260	.COUPLING,SHAFT,RIGI..... UOC:AVY,A11,A13,A14,A24,A25,A26,A27, BVY,B17,B18,B24,B25,C17,HVY,H11,H13, H14,H17,H18,H21,H24,H25,H26,H27,H28, MMM,NNN	1
30	PAFZZ	3120014352560	27647	15271	.BEARING,WASHER,THRU..... UOC:AVY,A11,A13,A14,A24,A25,A26,A27, BVY,B17,B18,B24,B25,C17,HVY,H11,H13, H14,H17,H18,H21,H24,H25,H26,H27,H28, MMM,NNN	1
31	PAFZZ	3950014351014	27647	32236	HOUSING PART,MECHAN..... UOC:AVY,A11,A13,A14,A24,A25,A26,A27, BVY,B17,B18,B24,B25,C17,HVY,H11,H13, H14,H17,H18,H21,H24,H25,H26,H27,H28, MMM,NNN	1

(1) ITEM NO	(2) SMR CODE	(3) NSN	(4) CAGEC	(5) PART NUMBER	(6) DESCRIPTION AND USABLE ON CODES(UOC)	(7) QTY
32	PAFZA	5330014464696	27647	30275	.PACKING ASSEMBLY..... UOC:AVY,A11,A13,A14,A24,A25,A26,A27, BVY,B17,B18,B24,B25,C17,HVY,H11,H13, H14,H17,H18,H21,H24,H25,H26,H27,H28, MMM,NNN	2
33	PAFZZ	3120014478658	27647	30274	.BUSHING,SLEEVE..... UOC:AVY,A11,A13,A14,A24,A25,A26,A27, BVY,B17,B18,B24,B25,C17,HVY,H11,H13, H14,H17,H18,H21,H24,H25,H26,H27,H28, MMM,NNN	2
34	PAFZZ	3120014352495	27647	32062	.BEARING,WASHER,THRU..... UOC:AVY,A11,A13,A14,A24,A25,A26,A27, BVY,B17,B18,B24,B25,C17,HVY,H11,H13, H14,H17,H18,H21,H24,H25,H26,H27,H28, MMM,NNN	1
35	PAFZZ	3110001089247	19207	900529	.BEARING,BALL,ANNULA..... UOC:AVY,A11,A13,A14,A24,A25,A26,A27, BVY,B17,B18,B24,B25,C17,HVY,H11,H13, H14,H17,H18,H21,H24,H25,H26,H27,H28, MMM,NNN	1
36	PAFZZ	6110014345562	27647	24800	PROTECTOR,THERMAL-O..... UOC:AVY,A11,A13,A14,A24,A25,A26,A27, BVY,B17,B18,B24,B25,C17,HVY,H11,H13, H14,H17,H18,H21,H24,H25,H26,H27,H28, MMM,NNN	1
37	PAFZZ	5935014315656	27647	31597	CONNECTOR,RECEPTACL..... UOC:AVY,A11,A13,A14,A24,A25,A26,A27, BVY,B17,B18,B24,B25,C17,HVY,H11,H13, H14,H17,H18,H21,H24,H25,H26,H27,H28, MMM,NNN	1
38	PAFZZ	5945014315195	27647	31604	SOLENOID ASSEMBLY 24 VDC..... UOC:AVY,A11,A13,A14,A24,A25,A26,A27, BVY,B17,B18,B24,B25,C17,HVY,H11,H13, H14,H17,H18,H21,H24,H25,H26,H27,H28, MMM,NNN	1
39	PAFZZ	4010014264536	27647	27569	WIRE ROPE ASSEMBLY, 3/8" EIPS X UOC:AVY,A11,A13,A14,A24,A25,A26,A27, BVY,B17,B18,B24,B25,C17,HVY,H11,H13, H14,H17,H18,H21,H24,H25,H26,H27,H28, MMM,NNN	1
40	PAFZZ	4030012560471	75535	G-408-3/8	THIMBLE,ROPE..... UOC:AVY,A11,A13,A14,A24,A25,A26,A27, BVY,B17,B18,B24,B25,C17,HVY,H11,H13, H14,H17,H18,H21,H24,H25,H26,H27,H28, MMM,NNN	1
41	PAFZZ	4030014264537	27647	29519	HOOK,HOIST W/CLEVIS AND COTTER PINS UOC:AVY,A11,A13,A14,A24,A25,A26,A27, BVY,B17,B18,B24,B25,C17,HVY,H11,H13, H14,H17,H18,H21,H24,H25,H26,H27,H28, MMM,NNN	1
42	PAFZZ	5305012102309	27647	8548	SCREW,TAPPING 10-24 X 3/8..... UOC:AVY,A11,A13,A14,A24,A25,A26,A27, BVY,B17,B18,B24,B25,C17,HVY,H11,H13,	3

(1) ITEM NO	(2) SMR CODE	(3) NSN	(4) CAGEC	(5) PART NUMBER	(6) DESCRIPTION AND USABLE ON CODES(UOC)	(7) QTY
					H14,H17,H18,H21,H24,H25,H26,H27,H28, MMM,NNN	
43	PAFZA	5340014300037	27647	31585	COVER,PROTECTIVE,DU..... UOC:AVY,A11,A13,A14,A24,A25,A26,A27, BVY,B17,B18,B24,B25,C17,HVY,H11,H13, H14,H17,H18,H21,H24,H25,H26,H27,H28, MMM,NNN	1
44	PAOZZ		27647	31293	PLATE,CONNECTOR..... UOC:AVY,A11,A13,A14,A24,A25,A26,A27, BVY,B17,B18,B24,B25,C17,HVY,H11,H13, H14,H17,H18,H21,H24,H25,H26,H27,H28, MMM,NNN	1
45	PAOZZ	5935014605508	71468	CA121003-3	COVER,ELECTRICAL CO..... UOC:AVY,A11,A13,A14,A24,A25,A26,A27, BVY,B17,B18,B24,B25,C17,HVY,H11,H13, H14,H17,H18,H21,H24,H25,H26,H27,H28, MMM,NNN	1
46	PAFZZ	5305014286635	27647	31625	SCREW,MACHINE M4 X 10..... UOC:AVY,A11,A13,A14,A24,A25,A26,A27, BVY,B17,B18,B24,B25,C17,HVY,H11,H13, H14,H17,H18,H21,H24,H25,H26,H27,H28, MMM,NNN	4
47	PAFZZ	6105014341729	27647	32235	MOTOR,DIRECT CURREN 24 VDC..... UOC:AVY,A11,A13,A14,A24,A25,A26,A27, BVY,B17,B18,B24,B25,C17,HVY,H11,H13, H14,H17,H18,H21,H24,H25,H26,H27,H28, MMM,NNN	1

END OF FIGURE

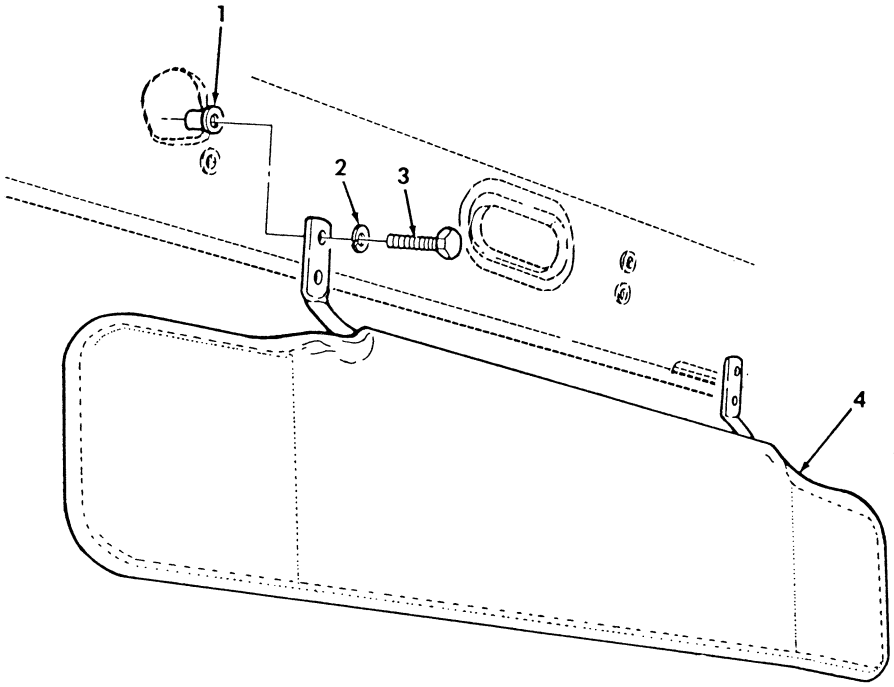

Figure 459. Modification Kit, Sun Visor.

(1) ITEM NO	(2) SMR CODE	(3) NSN	(4) CAGEC	(5) PART NUMBER	(6) DESCRIPTION AND USABLE ON CODES(UOC)	(7) QTY
					GROUP 3307 SPECIAL PURPOSE KITS	
					FIG. 459 MODIFICATION KIT,SUN VISOR	
1	PAOZZ	5310014113422	78276	ALS4-420-165	NUT,PLAIN,BLIND RIV 1/4-20 PART OF KIT P/N 57K3209..... UOC:AVY,A11,A13,A14,A15,A20,A24,A25, A26,A27,B16,B17,B18,HVY,H13,H14,H15, H16,H17,H18,H20,H21,H24,H25,H26,H27, H28	8
2	PAOZZ	5310006379541	96906	MS35338-46	WASHER,LOCK 1/4 PART OF KIT P/N 57K3209..... UOC:AVY,A11,A13,A14,A15,A20,A24,A25, A26,A27,B16,B17,B18,HVY,H13,H14,H15, H16,H17,H18,H20,H21,H24,H25,H26,H27, H28	8
3	PAOZZ	5305002253843	80204	B1821BH025C100N	SCREW,CAP,HEXAGON H 1/4-20 PART OF KIT P/N 57K3209..... UOC:AVY,A11,A13,A14,A15,A20,A24,A25, A26,A27,B16,B17,B18,HVY,H13,H14,H15, H16,H17,H18,H20,H21,H24,H25,H26,H27, H28	8
4	PAOZZ	2540014108793	34623	12446819	VISOR,SUN,VEHICLE PART OF KIT P/N 57K3209..... UOC:AVY,A11,A13,A14,A15,A20,A24,A25, A26,A27,B16,B17,B18,HVY,H13,H14,H15, H16,H17,H18,H20,H21,H24,H25,H26,H27, H28	2
KIT	PDOZZ	2540014319182	19207	57K3209	VISOR,SUN,VEHICLE.....	1
					NUT,PLAIN,BLIND RIV(8) 459-1	
					SCREW,CAP,HEXAGON H(8) 459-3	
					VISOR,SUN,VEHICLE (2) 459-4	
					WASHER,LOCK (8) 459-2	

END OF FIGURE

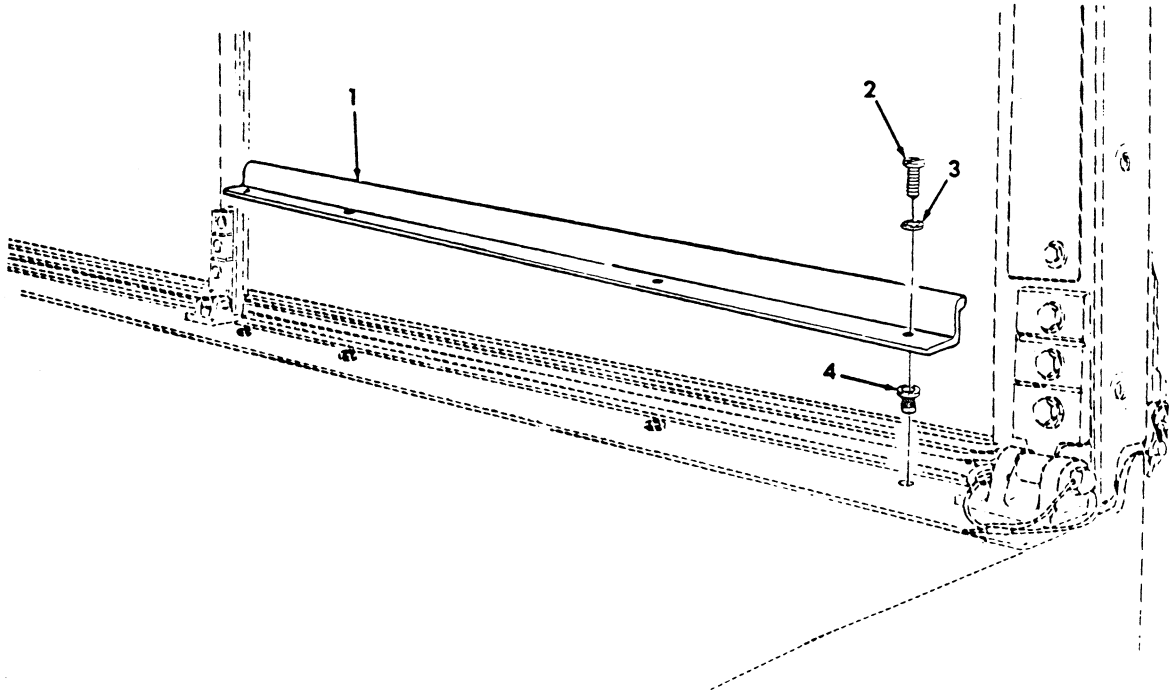

Figure 460. Modification Kit, Windshield Retainer.

(1) ITEM NO	(2) SMR CODE	(3) NSN	(4) CAGEC	(5) PART NUMBER	(6) DESCRIPTION AND USABLE ON CODES(UOC)	(7) QTY
					GROUP 3307 SPECIAL PURPOSE KITS	
					FIG. 460 MODIFICATION KIT, WINDSHIELD RETAINER	
1	PAOZZ	2510014110652	34623	12447029	FRAME,WINDOW,VEHICU PART OF KIT P/N 57K3206..... UOC:AVY,A11,A13,A14,A15,A20,A24,A25, A26,A27,B16,B17,B18,HVY,H11,H13,H14, H15,H16,H17,H18,H20,H21,H24,H25,H26, H27,H28,MMM	2
2	PAOZZ	5305002400194	96906	MS51849-76	SCREW,MACHINE #10-24 X 3/4 PART OF KIT P/N 57K3206..... UOC:AVY,A11,A13,A14,A15,A20,A24,A25, A26,A27,B16,B17,B18,HVY,H11,H13,H14, H15,H16,H17,H18,H20,H21,H24,H25,H26, H27,H28,MMM	8
3	PAOZZ	5310000453296	96906	MS35338-43	WASHER,LOCK PART OF KIT P/N 57K3206. UOC:AVY,A11,A13,A14,A15,A20,A24,A25, A26,A27,B16,B17,B18,HVY,H11,H13,H14, H15,H16,H17,H18,H20,H21,H24,H25,H26, H27,H28,MMM	8
4	PAOZZ	5325014110066	78276	ALS4-1024-130	INSERT,SCREW THREAD PART OF KIT P/N 57K3206..... UOC:AVY,A11,A13,A14,A15,A20,A24,A25, A26,A27,B16,B17,B18,HVY,H11,H13,H14, H15,H16,H17,H18,H20,H21,H24,H25,H26, H27,H28,MMM	8
KIT	PDOZZ	2510014311339	19207	57K3206	PARTS KIT,WINDSHIEL..... UOC:AVY,A11,A13,A14,A15,A20,A24,A25, A26,A27,B16,B17,B18,HVY,H11,H13,H14, H15,H16,H17,H18,H20,H21,H24,H25,H26, H27,H28,MMM	1
					FRAME,WINDOW,VEHICU(2) 460-1	
					INSERT,SCREW THREAD(8) 460-4	
					SCREW,MACHINE (8) 460-2	
					WASHER,LOCK (8) 460-3	

END OF FIGURE

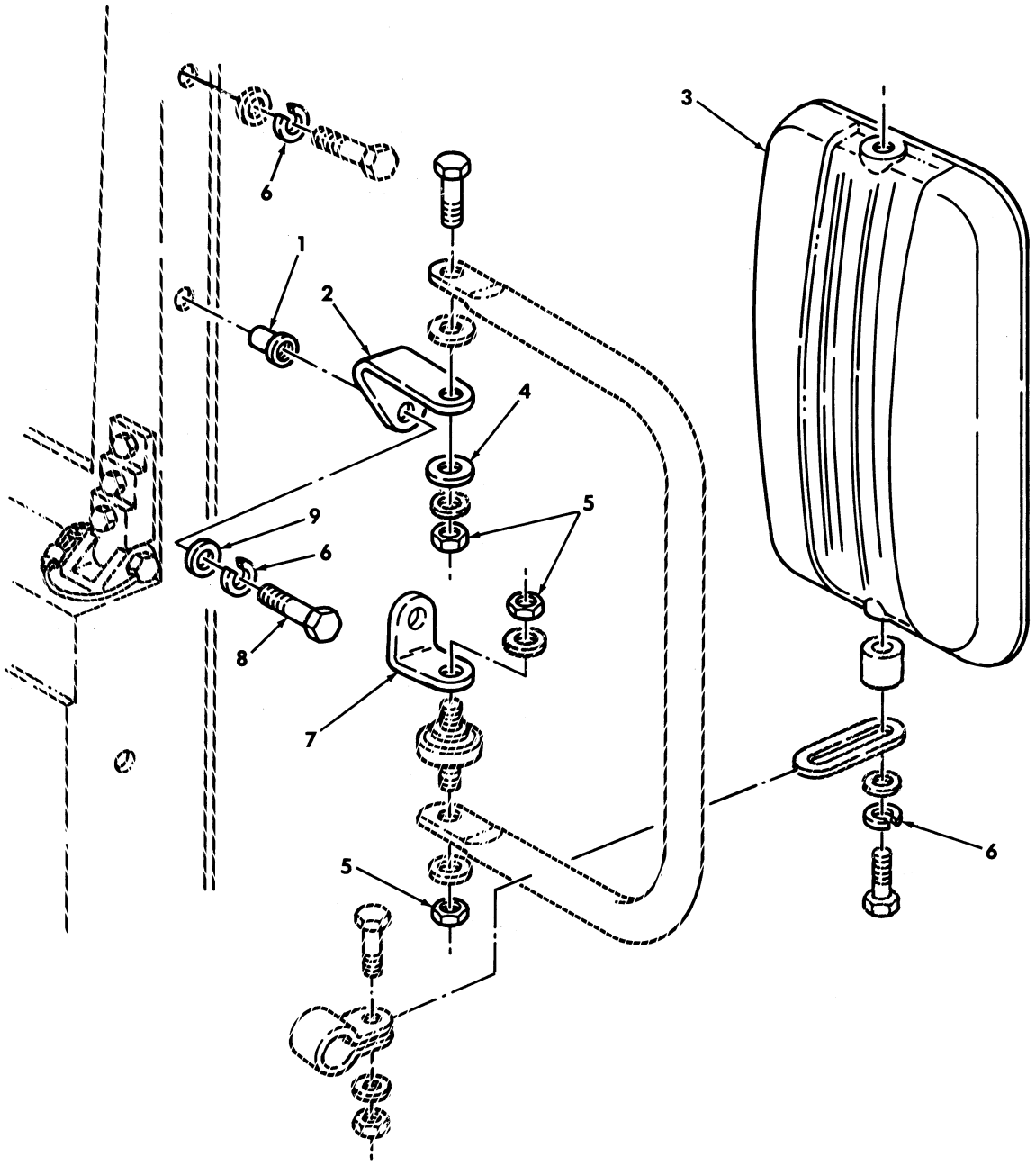

Figure 461. Left Rearview Mirror Relocation Kit.

(1) ITEM NO	(2) SMR CODE	(3) NSN	(4) CAGEC	(5) PART NUMBER	(6) DESCRIPTION AND USABLE ON CODES(UOC)	(7) QTY
					GROUP 3307 SPECIAL PURPOSE KITS	
					FIG. 461 LEFT REARVIEW MIRROR RELOCATION KIT	
1	PAOZZ	5310014133276	78276	ALS4-518-150	NUT,PLAIN,BLIND RIV PART OF KIT P/N 57K3213..... UOC:AVY,A11,A13,A14,A15,A20,A24,A25, A26,A27,B16,B17,B18,HVY,H11,H13,H14, H15,H16,H17,H18,H20,H21,H24,H25,H26, H27,H28,MMM	2
2	PAOZZ	5340014086456	19207	12343062	BRACKET,ANGLE PART OF KIT P/N 57K3213..... UOC:AVY,A11,A13,A14,A15,A20,A24,A25, A26,A27,B16,B17,B18,HVY,H11,H13,H14, H15,H16,H17,H18,H20,H21,H24,H25,H26, H27,H28,MMM	1
3	PAOZZ	2540014108794	70082	1351	MIRROR HEAD,VEHICUL PART OF KIT P/N 57K3213..... UOC:AVY,A11,A13,A14,A15,A20,A24,A25, A26,A27,B16,B17,B18,HVY,H11,H13,H14, H15,H16,H17,H18,H20,H21,H24,H25,H26, H27,H28,MMM	1
4	PAOZZ	5310013133562	96906	MS51859-20	WASHER,FLAT PART OF KIT P/N 57K3213. UOC:AVY,A11,A13,A14,A15,A20,A24,A25, A26,A27,B16,B17,B18,HVY,H11,H13,H14, H15,H16,H17,H18,H20,H21,H24,H25,H26, H27,H28,MMM	2
5	PAOZZ	5310012490904	81349	M45913/3-6CG8P	NUT,SELF-LOCKING,HE PART OF KIT P/N 57K3213..... UOC:AVY,A11,A13,A14,A15,A20,A24,A25, A26,A27,B16,B17,B18,HVY,H11,H13,H14, H15,H16,H17,H18,H20,H21,H24,H25,H26, H27,H28,MMM	3
6	PAOZZ	5310004079566	96906	MS35338-45	WASHER,LOCK PART OF KIT P/N 57K3213. UOC:AVY,A11,A13,A14,A15,A20,A24,A25, A26,A27,B16,B17,B18,HVY,H11,H13,H14, H15,H16,H17,H18,H20,H21,H24,H25,H26, H27,H28,MMM	6
7	PAOZZ	5340014086460	19207	12343063	BRACKET,ANGLE PART OF KIT P/N 57K3213..... UOC:AVY,A11,A13,A14,A15,A20,A24,A25, A26,A27,B16,B17,B18,HVY,H11,H13,H14, H15,H16,H17,H18,H20,H21,H24,H25,H26, H27,H28,MMM	1
8	PAOZZ	5306002264829	80204	B1821BH031C125N	BOLT,MACHINE PART OF KIT P/N 57K3213 UOC:AVY,A11,A13,A14,A15,A20,A24,A25, A26,A27,B16,B17,B18,HVY,H11,H13,H14, H15,H16,H17,H18,H20,H21,H24,H25,H26, H27,H28,MMM	2
9	PAOZZ	5310000806004	96906	MS27183-14	WASHER,FLAT PART OF KIT P/N 57K3213. UOC:AVY,A11,A13,A14,A15,A20,A24,A25, A26,A27,B16,B17,B18,HVY,H11,H13,H14,	2

(1) ITEM NO	(2) SMR CODE	(3) NSN	(4) CAGEC	(5) PART NUMBER	(6) DESCRIPTION AND USABLE ON CODES(UOC)	(7) QTY
					H15,H16,H17,H18,H20,H21,H24,H25,H26, H27,H28,MMM	
KIT	PDOZZ	2540014247363	19207	57K3213	PARTS KIT,MIRROR AS.....	1
					UOC:AVY,A11,A13,A14,A15,A20,A24,A25, A26,A27,B16,B17,B18,HVY,H11,H13,H14, H15,H16,H17,H18,H20,H21,H24,H25,H26, H27,H28,MMM	
					BOLT,MACHINE (2) 461-8	
					BRACKET,ANGLE (1) 461-2	
					BRACKET,ANGLE (1) 461-7	
					MIRROR HEAD,VEHICUL(1) 461-3	
					NUT,PLAIN,BLIND RIV(2) 461-1	
					NUT,SELF-LOCKING,HE(3) 461-5	
					WASHER,FLAT (2) 461-4	
					WASHER,FLAT (2) 461-9	
					WASHER,LOCK (6) 461-6	

END OF FIGURE

USE WITH A2 VEHICLES

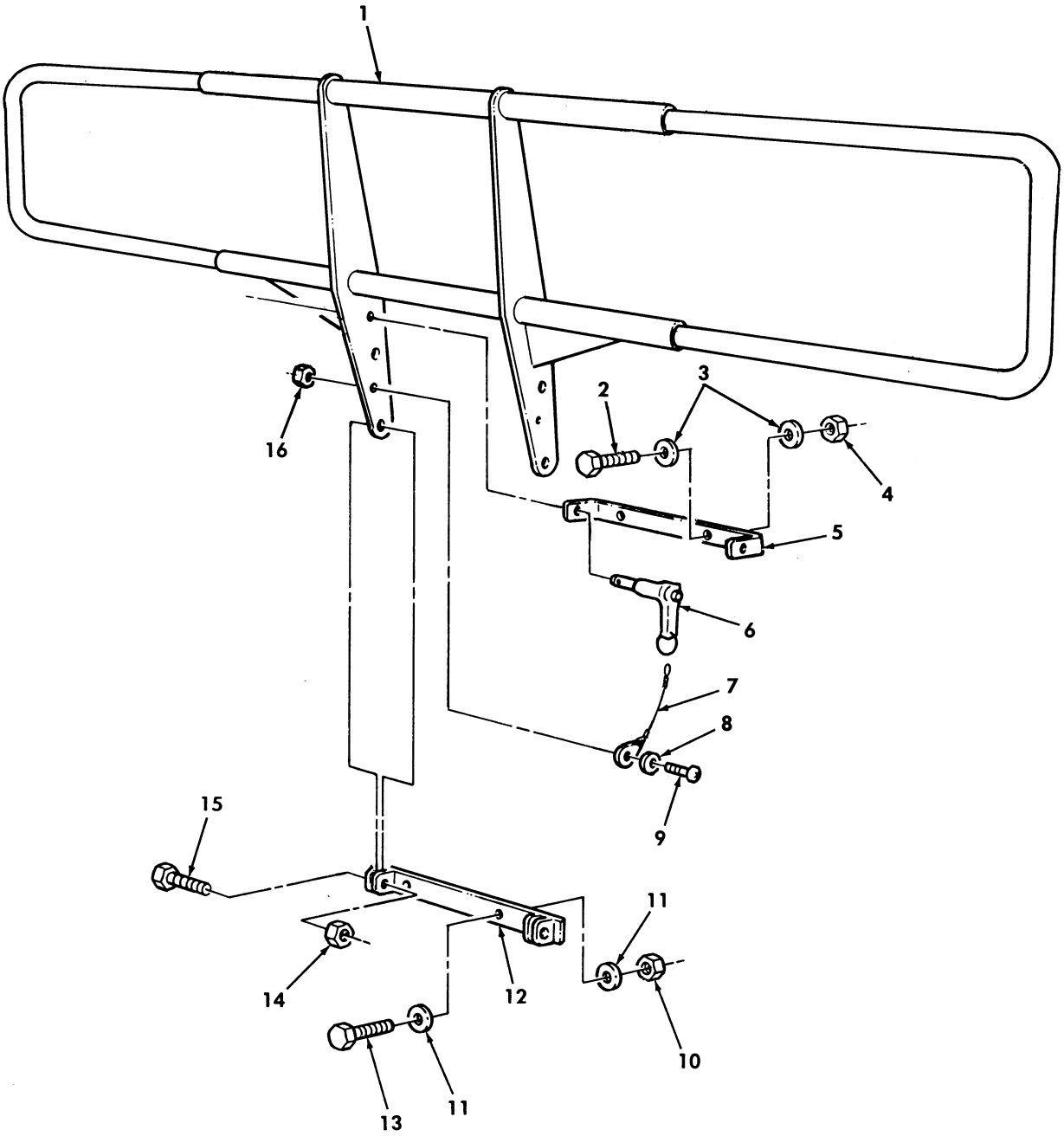

Figure 462. Brushguard Kit.

(1) ITEM NO	(2) SMR CODE	(3) NSN	(4) CAGEC	(5) PART NUMBER	(6) DESCRIPTION AND USABLE ON CODES(UOC)	(7) QTY
					GROUP 3307 SPECIAL PURPOSE KITS	
					FIG. 462 BRUSHGUARD KIT	
1	PAOZZ	2540014666114	34623	12460550	GUARD,BRUSH,VEHICUL PART OF KIT P/N 57K3490..... UOC:BVY,B15,B20,B24,B25,C17,NNN	1
2	PAOZZ	5305000680511	80204	B1821BH038C125N	SCREW,CAP,HEXAGON H 7/16-14 X 2.00 PART OF KIT P/N 57K3490..... UOC:BVY,B15,B20,B24,B25,C17,NNN	2
3	PAOZZ	5310014124013	24617	2436163	WASHER,FLAT 3/8 PART OF KIT P/N 57K3490..... UOC:BVY,B15,B20,B24,B25,C17,NNN	4
4	PAOZZ	5310004582382	24617	9418969	NUT,SELF-LOCKING,HE 3/8-16 PART OF KIT P/N 57K3490..... UOC:BVY,B15,B20,B24,B25,C17,NNN	2
5	PAOZA	5340014661978	19207	12460280	BRACKET,MOUNTING PART OF KIT P/N 57K3490..... UOC:BVY,B15,B20,B24,B25,C17,NNN	1
6	PAOZZ	5315014731590	80205	MS17986C1009	PIN,QUICK RELEASE PART OF KIT P/N 57K3490..... UOC:BVY,B15,B20,B24,B25,C17,NNN	2
7	PAOZZ	4010014660849	19207	12342287	WIRE ROPE ASSEMBLY, PART OF KIT P/N 57K3490..... UOC:BVY,B15,B20,B24,B25,C17,NNN	2
8	PAOZZ	5310013611163	24617	9417373	WASHER,FLAT #10 PART OF KIT P/N 57K3490..... UOC:BVY,B15,B20,B24,B25,C17,NNN	2
9	PAOZZ	5305011858647	7X677	160057	SCREW,MACHINE #10-32 X 3/4 PART OF KIT P/N 57K3490..... UOC:BVY,B15,B20,B24,B25,C17,NNN	2
10	PAOZZ	5310014664852	24617	9419477	NUT,SELF-LOCKING,HE 7/16-14 W/O WINCH PART OF KIT P/N 57K3490..... UOC:BVY,B15,B20,B24,B25,C17,NNN	2
11	PAOZZ	5310008094085	24617	9420022	WASHER,FLAT 7/16 PART OF KIT P/N 57K3490..... UOC:BVY,B15,B20,B24,B25,C17,NNN	4
12	PAOZZ	2590014665095	19207	12460279	BRACKET,VEHICULAR C PART OF KIT P/N 57K3490..... UOC:BVY,B15,B20,B24,B25,C17,NNN	1
13	PAOZZ	5305000712057	80204	B1821BH044C200N	SCREW,CAP,HEXAGON H PART OF KIT P/N 57K3490..... UOC:BVY,B15,B20,B24,B25,C17,NNN	2
14	PAOZZ	5310014090897	24617	9419482	NUT,SELF-LOCKING,HE PART OF KIT P/N 57K3490..... UOC:BVY,B15,B20,B24,B25,C17,NNN	2
15	PAOZZ	5305007247222	80204	B1821BH063C200N	SCREW,CAP,HEXAGON H 5/8-11 X 2.00 PART OF KIT P/N 57K3490..... UOC:BVY,B15,B20,B24,B25,C17,NNN	2
16	PAOZZ	5310001249265	72582	271169	NUT,PLAIN,ASSEMBLED #10-32 PART OF KIT P/N 57K3490..... UOC:BVY,B15,B20,B24,B25,C17,NNN	2
KIT	PDOZZ	2510014617075	19207	57K3490	KIT,BRUSHGUARD.....	1

(1) ITEM NO	(2) SMR CODE	(3) NSN	(4) CAGEC	(5) PART NUMBER	(6) DESCRIPTION AND USABLE ON CODES(UOC)	(7) QTY
					UOC:BVY,B15,B20,B24,B25,C17,NNN	
					BRACKET,VEHICULAR C(	1) 462-12
					BRACKET,MOUNTING (	1) 462-5
					GUARD,BRUSH,VEHICUL(	1) 462-1
					NUT,PLAIN,ASSEMBLED(	2) 462-16
					NUT,SELF-LOCKING,HE(	2) 462-4
					NUT,SELF-LOCKING,HE(	2) 462-10
					NUT,SELF-LOCKING,HE(	2) 462-14
					PIN,QUICK RELEASE (	2) 462-6
					SCREW,CAP,HEXAGON H(	2) 462-2
					SCREW,CAP,HEXAGON H(	2) 462-13
					SCREW,CAP,HEXAGON H(	2) 462-15
					SCREW,MACHINE (	2) 462-9
					WASHER,FLAT (	4) 462-3
					WASHER,FLAT (	4) 462-11
					WASHER,FLAT (	2) 462-8
					WIRE ROPE ASSEMBLY,(	2) 462-7

END OF FIGURE

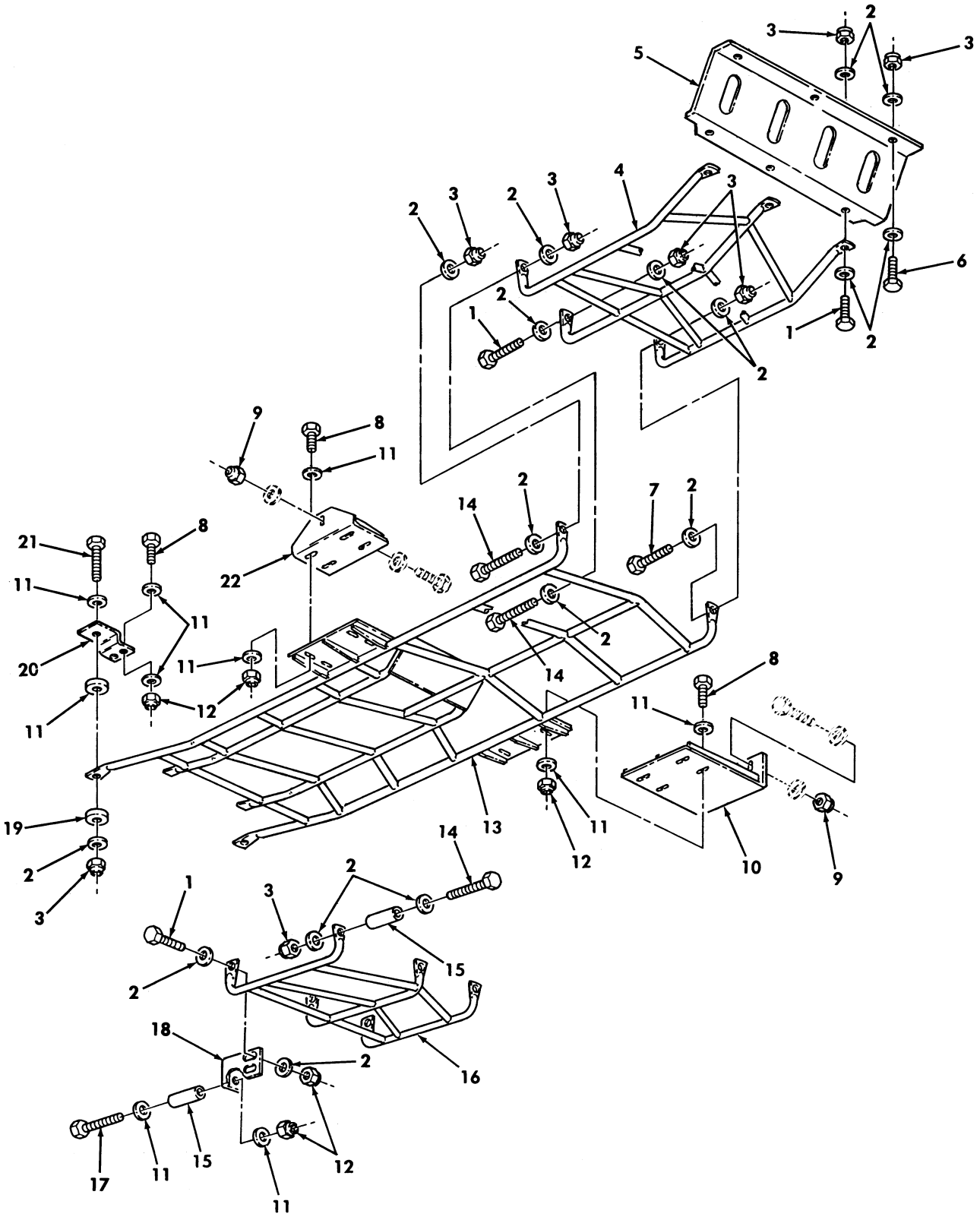

Figure 463. Underbody Protection Kit With and Wtihout Winch.

(1) ITEM NO	(2) SMR CODE	(3) NSN	(4) CAGEC	(5) PART NUMBER	(6) DESCRIPTION AND USABLE ON CODES(UOC)	(7) QTY
					GROUP 3307 SPECIAL PURPOSE KITS	
					FIG. 463 UNDERBODY PROTECTION KIT WITH AND WITHOUT WINCH	
1	PAOZZ	5305005432419	80204	B1821BH038C113N	SCREW,CAP,HEXAGON H PART OF KIT P/N 57K3492 PART OF KIT P/N 57K3495..... UOC:BVY,B15,B20,B24,B25,C17,NNN	7
2	PAOZZ	5310014124013	24617	2436163	WASHER,FLAT W/WINCH PART OF KIT P/N 57K3492..... UOC:BVY,B24,B25,C17,NNN	34
2	PAOZZ	5310014124013	24617	2436163	WASHER,FLAT W/O WINCH PART OF KIT P/N 57K3495..... UOC:BVY,B15,B20,B24,B25,C17,NNN	36
3	PAOZZ	5310009359021	96906	MS51943-35	NUT,SELF-LOCKING,HE W/WINCH PART OF KIT PART OF KIT P/N 57K3492..... UOC:BVY,B24,B25,C17,NNN	17
3	PAOZZ	5310009359021	96906	MS51943-35	NUT,SELF-LOCKING,HE W/O WINCH PART OF KIT P/N 57K3495..... UOC:BVY,B15,B20,B24,B25,C17,NNN	18
4	PAOZZ	2540014663849	19207	12460415	GUARD,BRUSH,VEHICUL PART OF KIT P/N 57K3492 PART OF KIT P/N 57K3495..... UOC:BVY,B15,B20,B24,B25,C17,NNN	1
5	PAOZZ	2590014657756	19207	12447163-2	PLATE ASSEMBLY SKID W/WINCH PART OF KIT P/N 57K3492..... UOC:BVY,B24,B25,C17,NNN	1
5	PAOZZ	5340014779397	19207	12460414	BRACKET,MULTIPLE AN W/O WINCH PART OF KIT P/N 57K3495..... UOC:BVY,B15,B20,B24,B25,C17,NNN	1
6	PAOZZ	5305000680510	80204	B1821BH038C100N	SCREW,CAP,HEXAGON H PART OF KIT P/N 57K3495..... UOC:BVY,B15,B20,B24,B25,C17,NNN	3
6	PAOZZ	5305000680510	80204	B1821BH038C100N	SCREW,CAP,HEXAGON H PART OF KIT P/N 57K3492..... UOC:BVY,B15,B20,B24,B25,C17,NNN	2
7	PAOZZ	5305011983440	7X677	9430724	SCREW,CAP,HEXAGON H PART OF KIT P/N 57K3492 PART OF KIT P/N 57K3495..... UOC:BVY,B15,B20,B24,B25,C17,NNN	1
8	PAOZZ	5306011300457	24617	9430677	BOLT,MACHINE PART OF KIT P/N 57K3492 PART OF KIT P/N 57K3495..... UOC:BVY,B15,B20,B24,B25,C17,NNN	12
9	PAOZZ	5310004883889	96906	MS51943-39	NUT,SELF-LOCKING,HE PART OF KIT P/N 57K3492 PART OF KIT P/N 57K3495..... UOC:BVY,B15,B20,B24,B25,C17,NNN	4
10	PAOZZ	5340014661982	19207	12447146	BRACKET,MOUNTING L.H.PART OF KIT P/N 57K3492 PART OF KIT P/N 57K3495..... UOC:BVY,B15,B20,B24,B25,C17,NNN	1
11	PAOZZ	5310011191024	24617	2436162	WASHER,FLAT PART OF KIT P/N 57K3492 PART OF KIT P/N 57K3495..... UOC:BVY,B15,B20,B24,B25,C17,NNN	36
12	PAOZZ	5310008140673	96906	MS51943-33	NUT,SELF-LOCKING,HE PART OF KIT P/N 57K3492 PART OF KIT P/N 57K3495..... UOC:BVY,B15,B20,B24,B25,C17,NNN	18

(1) ITEM NO	(2) SMR CODE	(3) NSN	(4) CAGEC	(5) PART NUMBER	(6) DESCRIPTION AND USABLE ON CODES(UOC)	(7) QTY
13	PAOZZ	2540014659030	19207	12447143	SHIELD ASSEMBLY,DRI PART OF KIT P/N 57K3492 PART OF KIT P/N 57K3495..... UOC:BVY,B15,B20,B24,B25,C17,NNN	1
14	PAOZZ	5305011979417	7X677	9428795	SCREW,CAP,HEXAGON H PART OF KIT P/N 57K3492 PART OF KIT P/N 57K3495..... UOC:BVY,B15,B20,B24,B25,C17,NNN	5
15	PAOZZ	5365014660850	19207	12338186-69	SPACER,SLEEVE PART OF KIT P/N 57K3492 PART OF KIT P/N 57K3495..... UOC:BVY,B15,B20,B24,B25,C17,NNN	9
16	PAOZZ	2540014663770	19207	12447144	GUARD,BRUSH,VEHICUL PART OF KIT P/N 57K3492 PART OF KIT P/N 57K3495..... UOC:BVY,B15,B20,B24,B25,C17,NNN	1
17	PAOZZ	5305014599564	24617	453039	SCREW,CAP,HEXAGON H PART OF KIT P/N 57K3492 PART OF KIT P/N 57K3495..... UOC:BVY,B15,B20,B24,B25,C17,NNN	6
18	PAOZZ	5340014662425	19207	12447145	BRACKET,ANGLE PART OF KIT P/N 57K3492 PART OF KIT P/N 57K3495..... UOC:BVY,B15,B20,B24,B25,C17,NNN	3
19	PAOZZ	5310014659727	19207	12447149	WASHER,FLAT PART OF KIT P/N 57K3492 PART OF KIT P/N 57K3495..... UOC:BVY,B15,B20,B24,B25,C17,NNN	4
20	PAOZZ	5340014664086	19207	12447148	BRACKET,MULTIPLE AN PART OF KIT P/N 57K3492 PART OF KIT P/N 57K3495..... UOC:BVY,B15,B20,B24,B25,C17,NNN	2
21	PAOZZ	5305009640691	80204	B1821BH038C150N	SCREW,CAP,HEXAGON H PART OF KIT P/N 57K3492 PART OF KIT P/N 57K3495..... UOC:BVY,B15,B20,B24,B25,C17,NNN	2
22	PAOZZ	5340014748830	34623	5593495	BRACKET,MOUNTING R.H. PART OF KIT P/N 57K3492 PART OF KIT P/N 57K3495. UOC:BVY,B15,B20,B24,B25,C17,NNN	1

END OF FIGURE

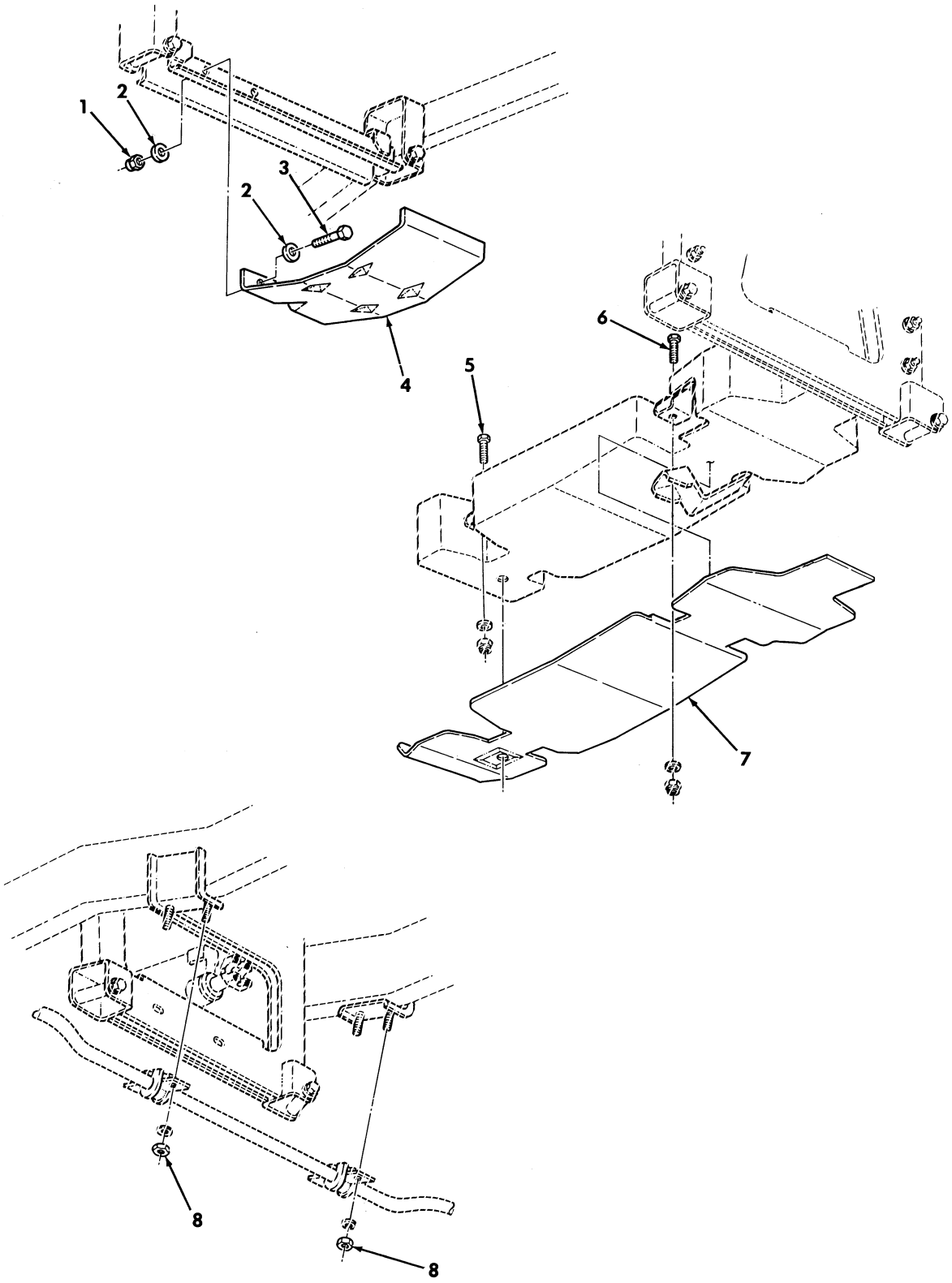

Figure 464. Underbody Protection Kit, Transfer Case, Fuel Tank Shields, and Sway Bar Link Nuts.

(1) ITEM NO	(2) SMR CODE	(3) NSN	(4) CAGEC	(5) PART NUMBER	(6) DESCRIPTION AND USABLE ON CODES(UOC)	(7) QTY
					GROUP 3307 SPECIAL PURPOSE KITS	
					FIG. 464 UNDERBODY PROTECTION KIT, TRANSFER CASE,FUEL TANK SHIELDS,AND SWAY BAR LINK NUTS	
1	PAOZZ	5310009359021	96906	MS51943-35	NUT,SELF-LOCKING,HE PART OF KIT P/N 57K3492,PART OF KIT P/N 57K3495..... UOC:BVY,B15,B20,B24,B25,C17,NNN	2
2	PAOZZ	5310014124013	24617	2436163	WASHER,FLAT PART OF KIT P/N 57K3492, PART OF KIT P/N 57K3495..... UOC:BVY,B15,B20,B24,B25,C17,NNN	4
3	PAOZZ	5305000680510	80204	B1821BH038C100N	SCREW,CAP,HEXAGON H PART OF KIT P/N 57K3492,PART OF KIT P/N 57K3495..... UOC:BVY,B15,B20,B24,B25,C17,NNN	2
4	PAOZZ	2590014663824	19207	12447151	SHIELD,TRANSFER CAS PART OF KIT P/N 57K3492,PART OF KIT P/N 57K3495..... UOC:BVY,B15,B20,B24,B25,C17,NNN	1
5	PAOZZ	5305014125995	19207	12460145-2	SCREW,CAP,HEXAGON H PART OF KIT P/N 57K3492,PART OF KIT P/N 57K3495..... UOC:BVY,B15,B20,B24,B25,C17,NNN	1
6	PAOZZ	5306014112338	19207	12460145-1	BOLT,MACHINE PART OF KIT P/N 57K3492 PART OF KIT P/N 57K3495..... UOC:BVY,B15,B20,B24,B25,C17,NNN	1
7	PAOZZ	2590014663866	19207	12447150	SHIELD,FUEL TANK PART OF KIT P/N 57K3492,PART OF KIT P/N 57K3495..... UOC:BVY,B15,B20,B24,B25,C17,NNN	1
8	PAOZZ	5310011504003	24617	9422299	NUT,SELF-LOCKING,HE PART OF KIT P/N 57K3492,PART OF KIT P/N 57K3495..... UOC:BVY,B15,B20,B24,B25,C17,NNN	4
KIT	PDOZZ	2540014678313	19207	57K3492	KIT WITH WINCH..... UOC:BVY,B15,B20,B24,B25,C17,NNN	1
					BOLT,MACHINE (12) 463-8	
					BOLT,MACHINE (1) 464-6	
					BRACKET,ANGLE (3) 463-18	
					BRACKET,MOUNTING (1) 463-10	
					BRACKET,MOUNTING (1) 463-22	
					BRACKET,MULTIPLE AN(2) 463-20	
					GUARD,BRUSH,VEHICUL(1) 463-4	
					GUARD,BRUSH,VEHICUL(1) 463-16	
					NUT,SELF-LOCKING,HE(17) 463-3	
					NUT,SELF-LOCKING,HE(4) 463-9	
					NUT,SELF-LOCKING,HE(18) 463-12	
					NUT,SELF-LOCKING,HE(2) 464-1	
					NUT,SELF-LOCKING,HE(4) 464-8	
					PLATE ASSEMBLY SKID(1) 463-5	
					SCREW,CAP,HEXAGON H(7) 463-1	
					SCREW,CAP,HEXAGON H(2) 463-6	
					SCREW,CAP,HEXAGON H(1) 463-7	
					SCREW,CAP,HEXAGON H(5) 463-14	
					SCREW,CAP,HEXAGON H(6) 463-17	
					SCREW,CAP,HEXAGON H(2) 463-21	
					SCREW,CAP,HEXAGON H(2) 464-3	

(1) ITEM NO	(2) SMR CODE	(3) NSN	(4) CAGEC	(5) PART NUMBER	(6) DESCRIPTION AND USABLE ON CODES(UOC)	(7) QTY
					SCREW,CAP,HEXAGON H(1) 464-5	
					SHIELD ASSEMBLY,DRI(1) 463-13	
					SHIELD,FUEL TANK (1) 464-7	
					SHIELD,TRANSFER CAS(1) 464-4	
					SPACER,SLEEVE (9) 463-15	
					WASHER,FLAT (34) 463-2	
					WASHER,FLAT (36) 463-11	
					WASHER,FLAT (4) 463-19	
					WASHER,FLAT (4) 464-2	
	PDOZZ	2540014678341	19207	57K3495	KIT WITH OUT WINCH.....	1
					UOC:BVY,B15,B20,B24,B25,C17 ,NNN	
					BOLT,MACHINE (12) 463-8	
					BOLT,MACHINE (1) 464-6	
					BRACKET,ANGLE (1) 463-18	
					BRACKET,MOUNTING (1) 463-10	
					BRACKET,MOUNTING (1) 463-22	
					BRACKET,MULTIPLE AN(1) 463-5	
					BRACKET,MULTIPLE AN(2) 463-20	
					GUARD,BRUSH,VEHICUL(1) 463-4	
					GUARD,BRUSH,VEHICUL(1) 463-16	
					NUT,SELF-LOCKING,HE(18) 463-3	
					NUT,SELF-LOCKING,HE(4) 463-9	
					NUT,SELF-LOCKING,HE(18) 463-12	
					NUT,SELF-LOCKING,HE(2) 464-1	
					NUT,SELF-LOCKING,HE(4) 464-8	
					SCREW,CAP,HEXAGON H(7) 463-1	
					SCREW,CAP,HEXAGON H(3) 463-6	
					SCREW,CAP,HEXAGON H(1) 463-7	
					SCREW,CAP,HEXAGON H(5) 463-14	
					SCREW,CAP,HEXAGON H(6) 463-17	
					SCREW,CAP,HEXAGON H(2) 463-21	
					SCREW,CAP,HEXAGON H(2) 464-3	
					SCREW,CAP,HEXAGON H(1) 464-5	
					SHIELD ASSEMBLY,DRI(1) 463-13	
					SHIELD,FUEL TANK (1) 464-7	
					SHIELD,TRANSFER CAS(1) 464-4	
					SPACER,SLEEVE (9) 463-15	
					WASHER,FLAT (36) 463-2	
					WASHER,FLAT (36) 463-11	
					WASHER,FLAT (4) 463-19	
					WASHER,FLAT (4) 464-2	

END OF FIGURE

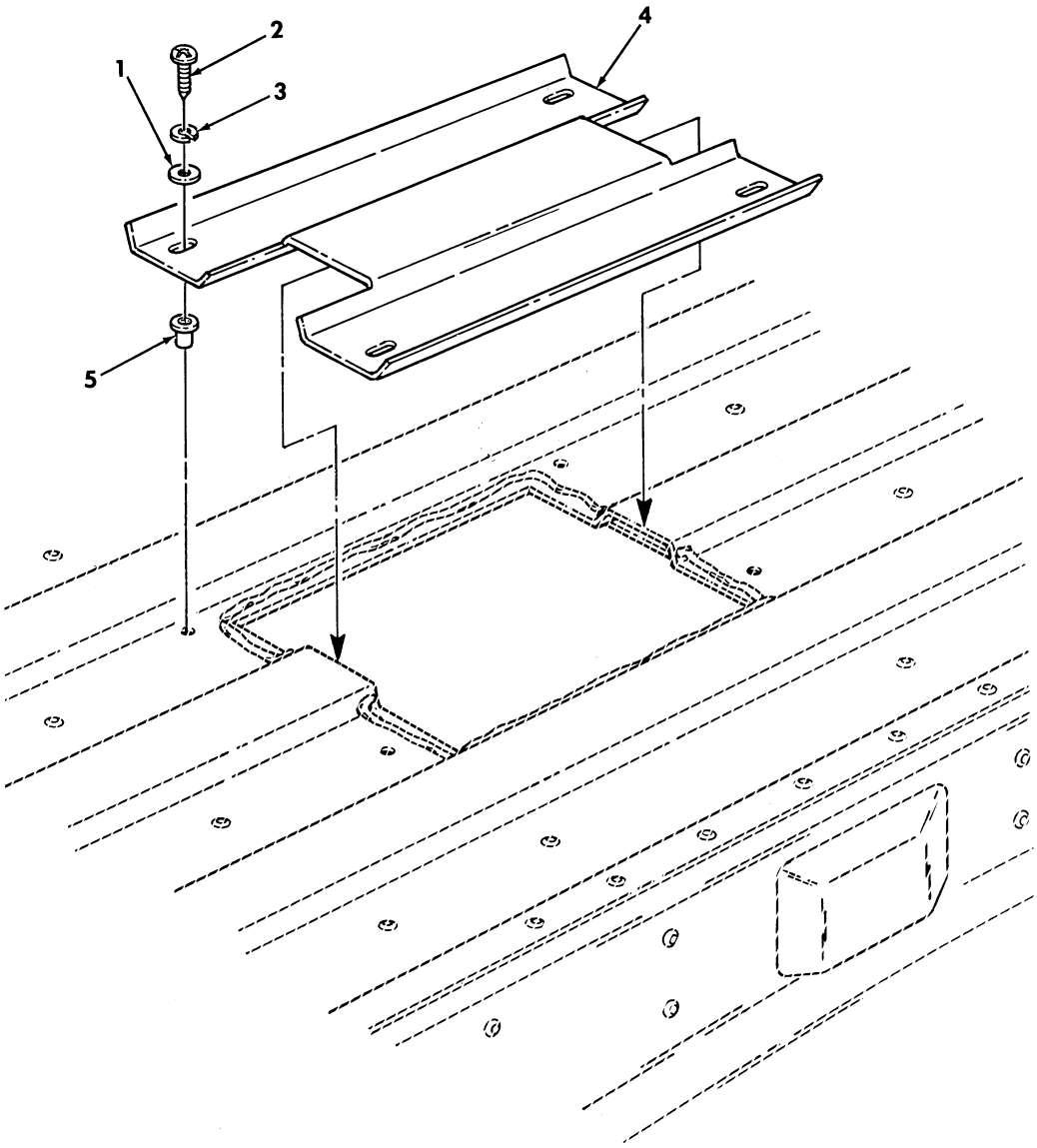

Figure 465. Cover, Access Cargo Floor Modification Kit.

(1) ITEM NO	(2) SMR CODE	(3) NSN	(4) CAGEC	(5) PART NUMBER	(6) DESCRIPTION AND USABLE ON CODES(UOC)	(7) QTY
					GROUP 3307 SPECIAL PURPOSE KITS	
					FIG. 465 COVER,ACCESS CARGO FLOOR MODIFICATION KIT	
1	PAOZZ	5310013611163	24617	9417373	WASHER,FLAT PART OF KIT P/N 57K3529. UOC:BVY,B15,B20,B24,B25,C17,NNN	4
2	PAOZZ	5305010831591	96906	MS51957-64B	SCREW,MACHINE PART OF KIT P/N 57K3529..... UOC:BVY,B15,B20,B24,B25,C17,NNN	4
3	PAOZZ	5310009222017	30379	120217	WASHER,LOCK PART OF KIT P/N 57K3529. UOC:BVY,B15,B20,B24,B25,C17,NNN	4
4	PAOZZ	5340014570804	19207	12460506	COVER,ACCESS PART OF KIT P/N 57K3529 UOC:BVY,B15,B20,B24,B25,C17,NNN	1
5	PAOZZ	5325014608350	78276	A1A1-1024-225	INSERT,SCREW THREAD PART OF KIT P/N 57K3529..... UOC:BVY,B15,B20,B24,B25,C17,NNN	4
KIT	PDOZZ	2510014547077	19207	57K3529	PARTS KIT,FLOOR VEH..... UOC:BVY,B15,B20,B24,B25,C17,NNN	1
					COVER,ACCESS (1) 465-4	
					INSERT,SCREW,THREAD(4) 465-5	
					SCREW,MACHINE (4) 465-2	
					WASHER,FLAT (4) 465-1	
					WASHER,LOCK (4) 465-3	

END OF FIGURE

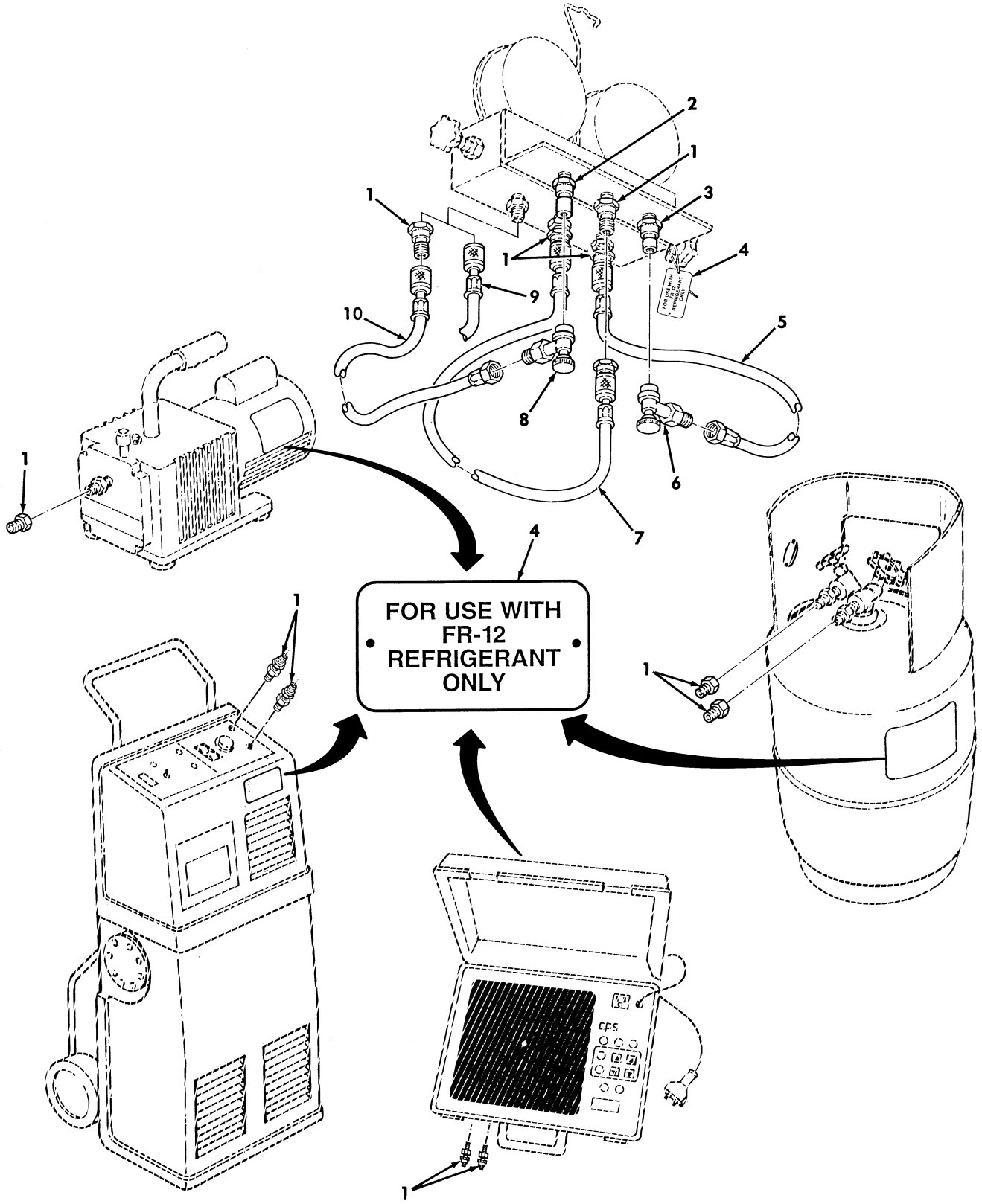

Figure 466. FR12 Refrigerant Parts Kit.

(1) ITEM NO	(2) SMR CODE	(3) NSN	(4) CAGEC	(5) PART NUMBER	(6) DESCRIPTION AND USABLE ON CODES(UOC)	(7) QTY
					GROUP 3307 SPECIAL PURPOSE KITS	
					FIG. 466 FR12 REFRIGERANT PARTS KIT	
1	PFOZZ	4730014551276	0ALB6	RC01A010-07-08	REDUCER,QUICK DISCO PART OF KIT P/N 57K3534..... UOC:A15,H15	11
2	PFOZZ	4730014551259	0ALB6	RC01A009-07-04	COUPLING ASSEMBLY,Q PART OF KIT P/N 57K3534..... UOC:A15,H15	1
3	PFOZZ	4730014551231	0ALB6	RC01A008-07-05	COUPLING ASSEMBLY,Q PART OF KIT P/N 57K3534..... UOC:A15,H15	1
4	PAOZZ	7690014699591	19207	12469044	LABEL PART OF KIT P/N 57K3534..... UOC:A15,H15	5
5	PFOZZ	4720014566674	01276	REO1-0002-0720	HOSE ASSEMBLY,NONME PART OF KIT P/N 57K3534..... UOC:A15,H15	1
6	PFOZZ	4820014611703	01276	RC01C-008	VALVE,FLOW CONTROL PART OF KIT P/N 57K3534..... UOC:A15,H15	1
7	PFOZZ		01276	RE01-0003-0720	HOSE ASSEMBLY PART OF KIT P/N 57K3534..... UOC:A15,H15	1
8	PFOZZ	4820014555021	0ALB6	RC01C-009	VALVE,ANGLE PART OF KIT P/N 57K3534. UOC:A15,H15	1
9	PFOZZ	4720014566729	01276	REO1-0003-0360	HOSE ASSEMBLY,NONME PART OF KIT P/N 57K3534..... UOC:A15,H15	1
10	PFOZZ	4720014583326	01276	RE01-0001-0720	HOSE ASSEMBLY,NONME PART OF KIT P/N 57K3534..... UOC:A15,H15	1
KIT	PAFZZ	4130014528773	19207	57K3534	PARTS KIT,AIR CONDI..... UOC:A15,H15	1
					COUPLING ASSEMBLY,Q(1) 466-2	
					COUPLING ASSEMBLY,Q(1) 466-3	
					HOSE ASSEMBLY,NONME(1) 466-10	
					HOSE ASSEMBLY,NONME(1) 466-5	
					HOSE ASSEMBLY,NONME(1) 466-9	
					HOSE ASSEMBLY (1) 466-7	
					LABEL (5) 466-4	
					REDUCER,QUICK DISCO(11) 466-1	
					VALVE,ANGLE (1) 466-8	
					VALVE,FLOW CONTROL (1) 466-6	

END OF FIGURE

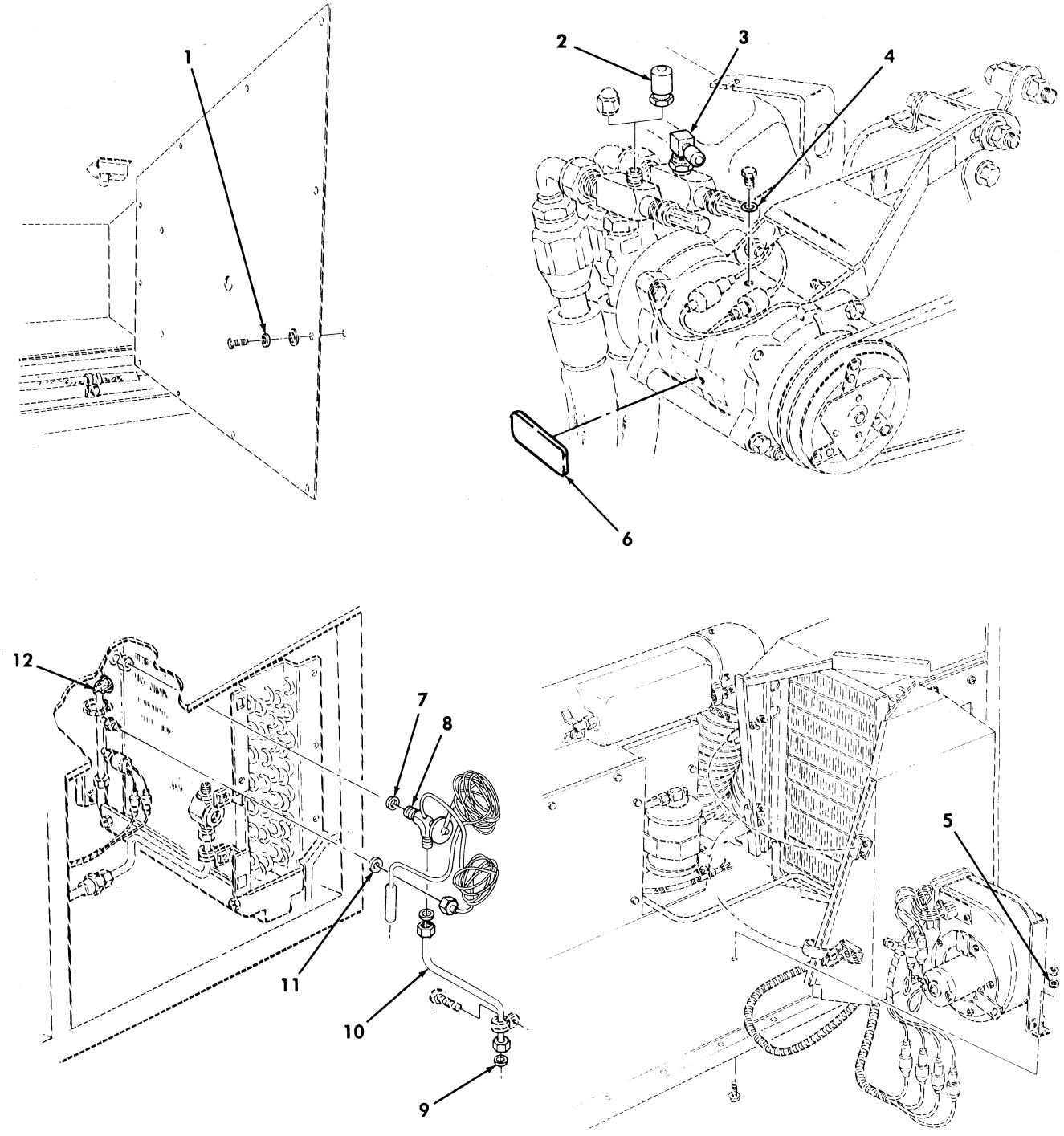

Figure 467. R-12 to FR12 Refrigerant Conversion Retrofit Kit.

(1) ITEM NO	(2) SMR CODE	(3) NSN	(4) CAGEC	(5) PART NUMBER	(6) DESCRIPTION AND USABLE ON CODES(UOC)	(7) QTY
					GROUP 3307 SPECIAL PURPOSE KITS	
					FIG. 467 R-12 TO FR12 REFRIGERANT CONVERSION RETROFIT KIT	
1	PAOZZ	5310000809786	96906	MS45904-60	WASHER,LOCK PART OF KIT P/N 57K3533. UOC:A15,H15	11
2	PAOZZ	4730014551231	0ALB6	RC01A008-07-05	COUPLING ASSEMBLY,Q PART OF KIT P/N 57K3533..... UOC:A15,H15	1
3	PAOZZ	4730014551220	0ALB6	RC01D007-07-04	ELBOW,QUICK DISCONN PART OF KIT P/N 57K3533..... UOC:A15,H15	1
4	PAOZZ	5331012881062	63829	8385-0520	O-RING PART OF KIT P/N 57K3533..... UOC:A15,H15	1
5	PAOZZ	5310005825965	96906	MS35338-44	WASHER,LOCK PART OF KIT P/N 57K3533. UOC:A15,H15	1
6	PAOZZ	7690014699596	19207	12469045	LABEL PART OF KIT P/N 57K3533..... UOC:A15,H15	1
7	PAOZZ	5331011609857	24234	300442	O-RING PART OF KIT P/N 57K3533..... UOC:A15,H15	1
8	PAOZZ	4820014753663	78462	797ABIFE-1.5 CP60	REGULATOR,THERMOSTA PART OF KIT P/N 57K3533..... UOC:A15,H15	1
9	PAOZZ	5331010613000	24234	300448	O-RING PART OF KIT P/N 57K3533..... UOC:A15,H15	2
10	PAOZZ	4710014570590	19207	12469046	TUBE ASSEMBLY,METAL PART OF KIT P/N 57K3533..... UOC:A15,H15	1
11	PAOZZ	5331001850075	99688	56480	O-RING PART OF KIT P/N 57K3533..... UOC:A15,H15	1
12	PAOZZ	9320010103240	58727	PT1	SEAL,MOISTURE PART OF KIT P/N 57K3533..... UOC:A15,H15	1
KIT	PAOZZ	4310014528772	19207	57K3533	PARTS KIT,AIR CONDI..... UOC:A15,H15	1
					COUPLING ASSEMBLY (1) 467-2	
					ELBOW,QUICK DISCONN(1) 467-3	
					LABEL (1) 467-6	
					O-RING (1) 467-4	
					O-RING (1) 467-7	
					O-RING (2) 467-9	
					O-RING (1) 467-11	
					SEAL,MOISTURE (1) 467-12	
					TUBE ASSEMBLY,METAL(1) 467-10	
					VALVE,THERMO EXPANS(1) 467-8	
					WASHER,LOCK (11) 467-1	
					WASHER,LOCK (1) 467-5	

END OF FIGURE

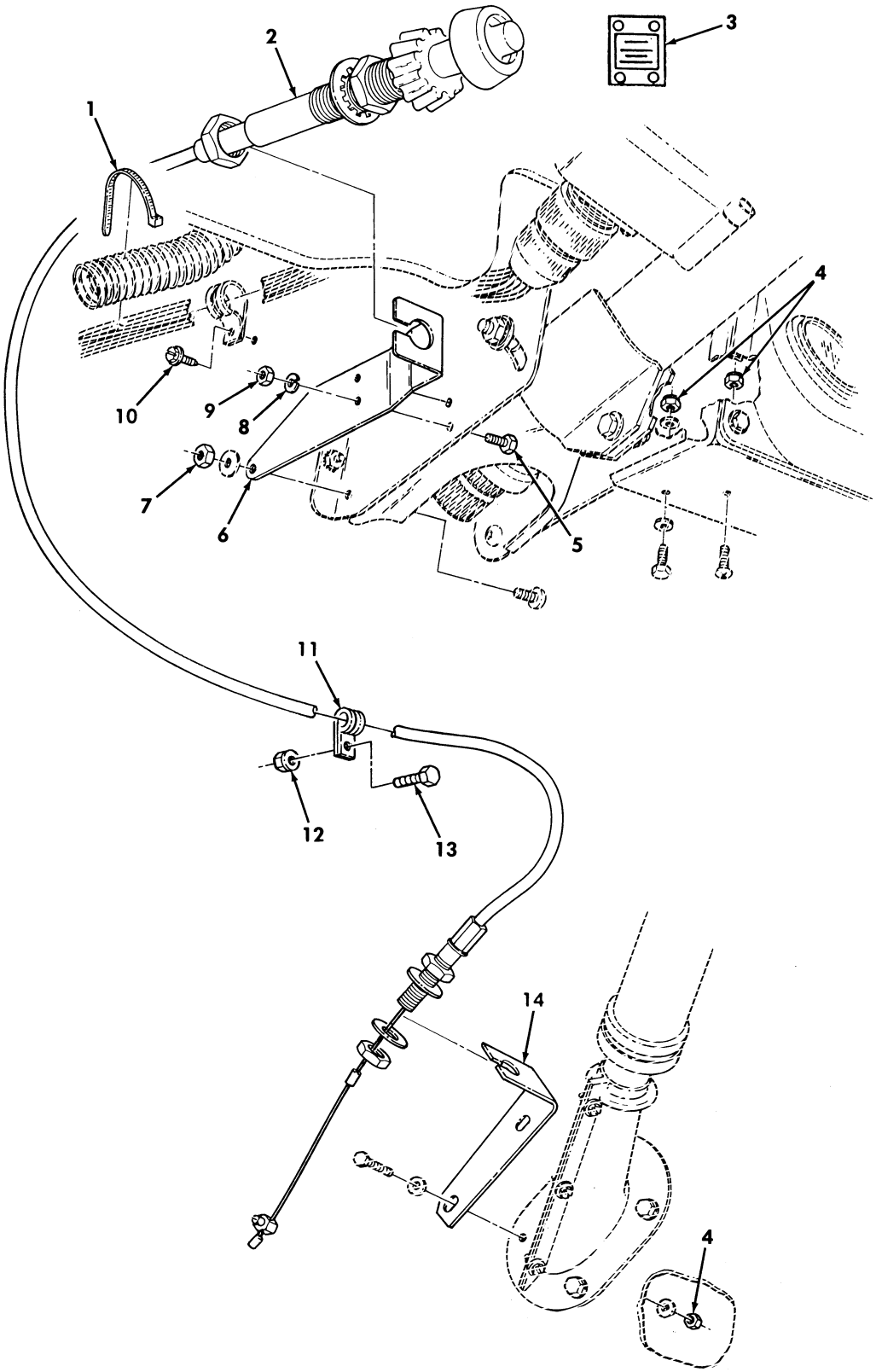

Figure 468. Hand Throttle Control Kit.

(1) ITEM NO	(2) SMR CODE	(3) NSN	(4) CAGEC	(5) PART NUMBER	(6) DESCRIPTION AND USABLE ON CODES(UOC)	(7) QTY
					GROUP 3307 SPECIAL PURPOSE KITS	
					FIG. 468 HAND THROTTLE CONTROL KIT	
1	PAOZZ	5975010345871	96906	MS3367-7-0	STRAP,TIEDOWN,ELECT PART OF KIT P/N 57K3531.....	1
2	PAOZZ	2590014664397	60602	36162-23	CONTROL ASSEMBLY,PU PART OF KIT P/N 57K3531.....	1
3	PAOZZ	7690014665217	19207	12460548	MARKER,IDENTIFICATI PART OF KIT P/N 57K3531.....	1
4	PAOZZ	5310000614650	96906	MS51943-31	NUT,SELF-LOCKING,HE PART OF KIT P/N 57K3531.....	4
5	PAOZZ	5305000680508	80204	B1821BH025C075N	SCREW,CAP,HEXAGON H PART OF KIT P/N 57K3531.....	2
6	PAOZZ	2590014665250	34623	12460547	BRACKET,VEHICULAR C PART OF KIT P/N 57K3531.....	1
7	PAOZZ	5310008140673	96906	MS51943-33	NUT,SELF-LOCKING,HE PART OF KIT P/N 57K3531.....	1
8	PAOZZ	5310006379541	96906	MS35338-46	WASHER,LOCK PART OF KIT P/N 57K3531.	2
9	PAOZZ	5310005845005	12204	120375	NUT,PLAIN,HEXAGON PART OF KIT P/N 57K3531.....	2
10	PAOZZ	5305012596322	34623	12342499-1	SCREW,MACHINE PART OF KIT P/N 57K3531.....	1
11	PAOZZ	5340007647051	96906	MS21333-69	CLAMP,LOOP PART OF KIT P/N 57K3531..	1
12	PAOZZ	5310001249265	72582	271169	NUT,PLAIN,ASSEMBLED PART OF KIT P/N 57K3531.....	1
13	PAOZZ	5305005829501	82386	410-63	SCREW,CAP,HEXAGON H PART OF KIT P/N 57K3531.....	1
14	PAOZZ	2590013079303	57958	C5136359	BRACKET,VEHICULAR C PART OF KIT P/N 57K3531.....	1
KIT	PAOZZ	2910014666264	34623	57K3531	PARTS KIT,THROTTLE.....	1
					BRACKET,VEHICULAR C(1) 468-6	
					BRACKET,VEHICULAR C(1) 468-14	
					CLAMP,LOOP (1) 468-11	
					CONTROL ASSEMBLY,PU(1) 468-2	
					MARKER,IDENTIFICATI(1) 468-3	
					NUT,PLAIN,HEXAGON (2) 468-9	
					NUT,PLAIN,ASSEMBLED(1) 468-12	
					NUT,SELF-LOCKING,HE(4) 468-4	
					NUT,SELF-LOCKING,HE(1) 468-7	
					SCREW,CAP,HEXAGON H(2) 468-5	
					SCREW,CAP,HEXAGON H(1) 468-13	
					SCREW,MACHINE (1) 468-10	
					STRAP,TIEDOWN,ELECT(1) 468-1	
					WASHER,LOCK (2) 468-8	

END OF FIGURE

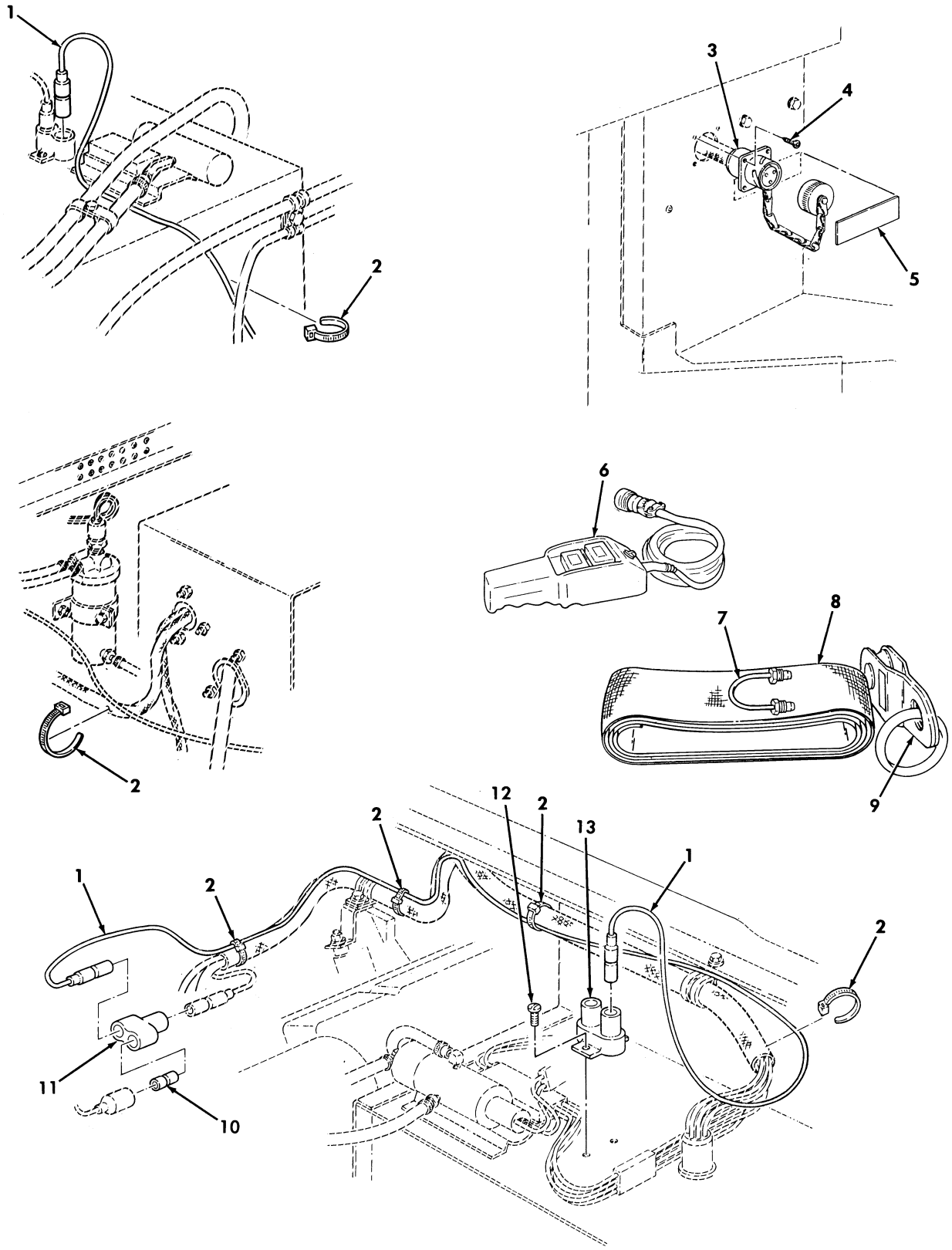

Figure 469. 10,500 Lb Hydraulic Winch Accessory Kit.

(1) ITEM NO	(2) SMR CODE	(3) NSN	(4) CAGEC	(5) PART NUMBER	(6) DESCRIPTION AND USABLE ON CODES(UOC)	(7) QTY
					GROUP 3307 SPECIAL PURPOSE KITS	
					FIG. 469 10,500 LB HYDRAULIC WINCH ACCESSORY KIT	
1	PAOZZ	6150014731169	19207	12469065-1	LEAD,ELECTRICAL PART OF KIT P/N 57K3541..... UOC:AVY,A13,A14,A24,A25,A26,A27,BVY, B16,B17,B18,B24,B25,C17,HVY,H13,H14, H16,H17,H18,H21,H24,H25,H26,H27,H28, NNN	1
2	PAOZZ	5975009846582	96906	MS3367-1-0	STRAP,TIEDOWN,ELECT PART OF KIT P/N 57K3541..... UOC:AVY,A13,A14,A24,A25,A26,A27,BVY, B16,B17,B18,B24,B25,C17,HVY,H13,H14, H16,H17,H18,H21,H24,H25,H26,H27,H28, NNN	6
3	PAOZZ	6150014731178	19207	12469064	CABLE ASSEMBLY,SPEC PART OF KIT P/N 57K3541..... UOC:AVY,A13,A14,A24,A25,A26,A27,BVY, B16,B17,B18,B24,B25,C17,HVY,H13,H14, H16,H17,H18,H21,H24,H25,H26,H27,H28, NNN	1
4	PAOZZ	5305014740988	24617	9417323	SCREW,TAPPING PART OF KIT P/N 57K3541..... UOC:AVY,A13,A14,A24,A25,A26,A27,BVY, B16,B17,B18,B24,B25,C17,HVY,H13,H14, H16,H17,H18,H21,H24,H25,H26,H27,H28, NNN	4
5	PAOZZ		19207	12469066	DECAL PART OF KIT P/N 57K3541..... UOC:AVY,A13,A14,A24,A25,A26,A27,BVY, B16,B17,B18,B24,B25,C17,HVY,H13,H14, H16,H17,H18,H21,H24,H25,H26,H27,H28, NNN	1
6	PAOZZ	6150014758835	0GZB7	983-74-1001	CONTROL,REEL PART OF KIT P/N 57K3541 UOC:AVY,A13,A14,A24,A25,A26,A27,BVY, B16,B17,B18,B24,B25,C17,HVY,H13,H14, H16,H17,H18,H21,H24,H25,H26,H27,H28, NNN	1
7	PAOZZ	4710014753753	0GZB7	983-90-50201	TUBE ASSEMBLY,METAL PART OF KIT P/N 57K3541..... UOC:AVY,A13,A14,A24,A25,A26,A27,BVY, B16,B17,B18,B24,B25,C17,HVY,H13,H14, H16,H17,H18,H21,H24,H25,H26,H27,H28	1
8	PAOZA	5340014753650	0GZB7	983-60-50089	STRAP,RETAINING PART OF KIT P/N 57K3541..... UOC:AVY,A13,A14,A24,A25,A26,A27,BVY, B16,B17,B18,B24,B25,C17,HVY,H13,H14, H16,H17,H18,H21,H24,H25,H26,H27,H28, NNN	1
9	PAOZZ	3940014754983	0GZB7	983-60-50085-A	BLOCK,TACKLE PART OF KIT P/N 57K3541 UOC:AVY,A13,A14,A24,A25,A26,A27,BVY, B16,B17,B18,B24,B25,C17,HVY,H13,H14,	1

(1) ITEM NO	(2) SMR CODE	(3) NSN	(4) CAGEC	(5) PART NUMBER	(6) DESCRIPTION AND USABLE ON CODES(UOC)	(7) QTY
					H16,H17,H18,H21,H24,H25,H26,H27,H28, NNN	
10	PAOZZ	5935008074109	19207	8741492	ADAPTER,CONNECTOR PART OF KIT P/N 57K3541..... UOC:AVY,A13,A14,A24,A25,A26,A27,BVY, B16,B17,B18,B24,B25,C17,HVY,H13,H14, H16,H17,H18,H21,H24,H25,H26,H27,H28, NNN	1
11	PAOZZ	5935009006281	96906	MS27147-1	ADAPTER,CONNECTOR PART OF KIT P/N 57K3541..... UOC:AVY,A13,A14,A24,A25,A26,A27,BVY, B16,B17,B18,B24,B25,C17,HVY,H13,H14, H16,H17,H18,H21,H24,H25,H26,H27,H28, NNN	1
12	PAOZZ	5305014783387	24617	449617	SCREW,TAPPING PART OF KIT P/N 57K3541..... UOC:AVY,A13,A14,A24,A25,A26,A27,BVY, B16,B17,B18,B24,B25,C17,HVY,H13,H14, H16,H17,H18,H21,H24,H25,H26,H27,H28, NNN	2
13	PAOZZ	5925014302318	58536	AA55571/01-001	CIRCUIT BREAKER PART OF KIT P/N 57K3541..... UOC:AVY,A13,A14,A24,A25,A26,A27,BVY, B16,B17,B18,B24,B25,C17,HVY,H13,H14, H16,H17,H18,H21,H24,H25,H26,H27,H28, NNN	1

END OF FIGURE

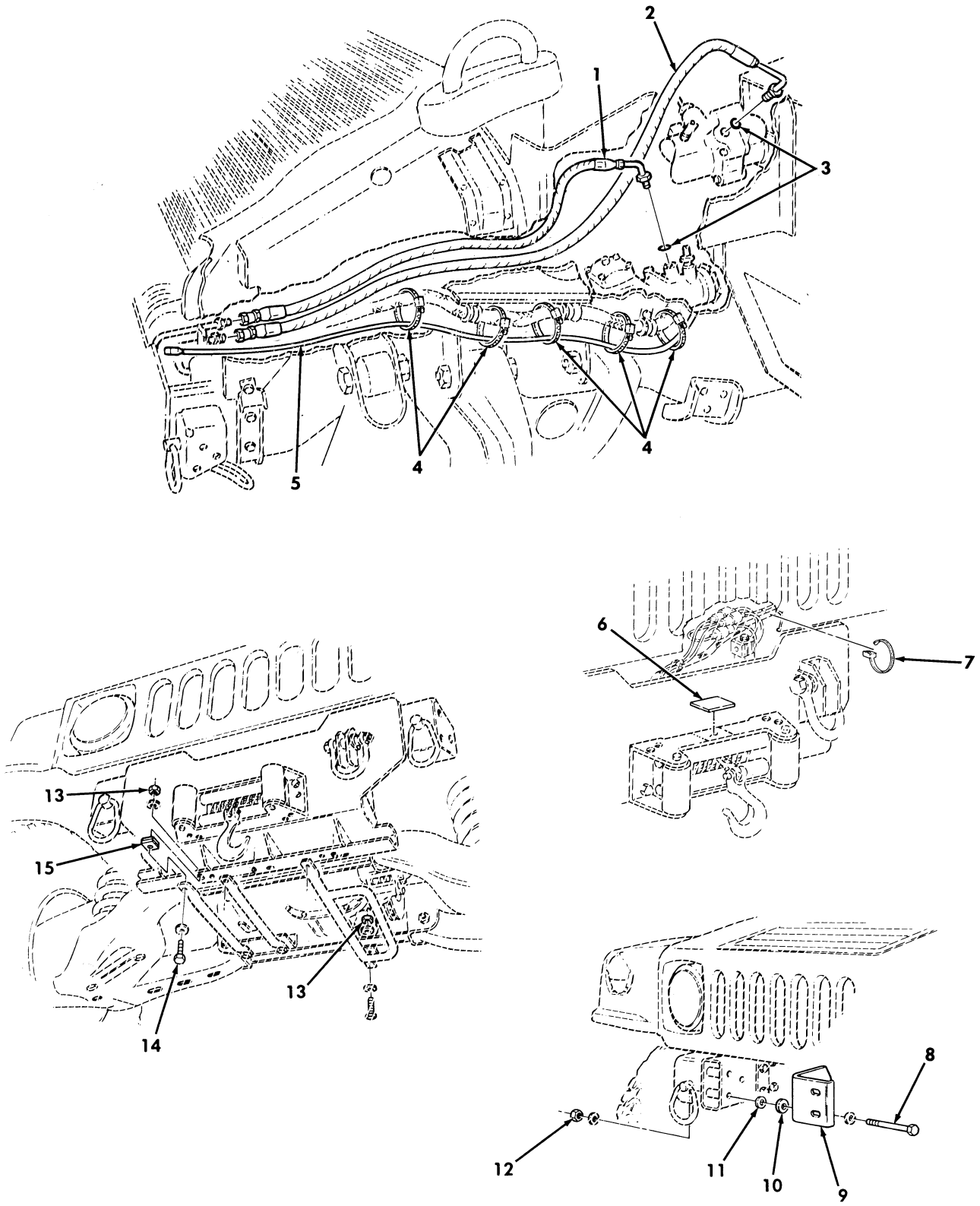

Figure 470. 10,500 Lb Hydraulic Winch Accessory Kit.

(1) ITEM NO	(2) SMR CODE	(3) NSN	(4) CAGEC	(5) PART NUMBER	(6) DESCRIPTION AND USABLE ON CODES(UOC)	(7) QTY
					GROUP 3307 SPECIAL PURPOSE KITS	
					FIG. 470 10,500 LB HYDRAULIC WINCH ACCESSORY KIT	
1	PAOZZ	4720014753757	0GZB7	983-88-00C36	HOSE ASSEMBLY,NONME PART OF KIT P/N 57K3541..... UOC:AVY,A13,A14,A24,A25,A26,A27,BVY, B16,B17,B18,B24,B25,C17,HVY,H13,H14, H16,H17,H18,H21,H24,H25,H26,H27,H28, NNN	1
2	PAOZZ	4720014754641	0GZB7	983-88-00C47	HOSE ASSEMBLY,NONME PART OF KIT P/N 57K3541..... UOC:AVY,A13,A14,A24,A25,A26,A27,BVY, B16,B17,B18,B24,B25,C17,HVY,H13,H14, H16,H17,H18,H21,H24,H25,H26,H27,H28, NNN	1
3	PAOZZ	5331005806586	41387	2938-2	O-RING PART OF KIT P/N 57K3541..... UOC:AVY,A13,A14,A24,A25,A26,A27,BVY, B16,B17,B18,B24,B25,C17,HVY,H13,H14, H16,H17,H18,H21,H24,H25,H26,H27,H28, NNN	2
4	PAOZZ	5975010345871	96906	MS3367-7-0	STRAP,TIEDOWN,ELECT PART OF KIT P/N 57K3541..... UOC:AVY,A13,A14,A24,A25,A26,A27,BVY, B16,B17,B18,B24,B25,C17,HVY,H13,H14, H16,H17,H18,H21,H24,H25,H26,H27,H28, NNN	5
5	PAOZZ	6150014731174	19207	12469065-2	LEAD,ELECTRICAL PART OF KIT P/N 57K3541..... UOC:AVY,A13,A14,A24,A25,A26,A27,BVY, B16,B17,B18,B24,B25,C17,HVY,H13,H14, H16,H17,H18,H21,H24,H25,H26,H27,H28, NNN	1
6	PAOZZ		19207	12469067	DECAL PART OF KIT P/N 57K3541..... UOC:AVY,A13,A14,A24,A25,A26,A27,BVY, B16,B17,B18,B24,B25,C17,HVY,H13,H14, H16,H17,H18,H21,H24,H25,H26,H27,H28, NNN	1
7	PAOZZ	5975009846582	56501	TY25M0	STRAP,TIEDOWN,ELECT PART OF KIT P/N 57K3541..... UOC:AVY,A13,A14,A24,A25,A26,A27,BVY, B16,B17,B18,B24,B25,C17,HVY,H13,H14, H16,H17,H18,H21,H24,H25,H26,H27,H28, NNN	2
8	PAOZZ	5305007247254	80204	B1821BH063C400N	SCREW,CAP,HEXAGON H PART OF KIT P/N 57K3541..... UOC:AVY,A13,A14,A24,A25,A26,A27,BVY, B16,B17,B18,B24,B25,C17,HVY,H13,H14, H16,H17,H18,H21,H24,H25,H26,H27,H28, NNN	6
9	PAOZZ	2540014739040	34623	6001553	BRACKET,R.H. TOW HOOK PART OF KIT P/N 57K3541.....	1

(1) ITEM NO	(2) SMR CODE	(3) NSN	(4) CAGEC	(5) PART NUMBER	(6) DESCRIPTION AND USABLE ON CODES(UOC)	(7) QTY
					UOC:AVY,A13,A14,A24,A25,A26,A27,BVY, B16,B17,B18,B24,B25,C17,HVY,H13,H14, H16,H17,H18,H21,H24,H25,H26,H27,H28, NNN	
9	PAOZZ	2540014739045	34623	6001552	BRACKET,L.H. TOW HOOK PART OF KIT P/N 57K3541..... UOC:AVY,A13,A14,A24,A25,A26,A27,BVY, B16,B17,B18,B24,B25,C17,HVY,H13,H14, H16,H17,H18,H21,H24,H25,H26,H27,H28, NNN	1
10	PAOZZ	5310011474052	24617	2436168	WASHER,FLAT PART OF KIT P/N 57K3541. UOC:AVY,A13,A14,A24,A25,A26,A27,BVY, B16,B17,B18,B24,B25,C17,HVY,H13,H14, H16,H17,H18,H21,H24,H25,H26,H27,H28, NNN	2
11	PAOZZ	5310011517347	24617	2436167	WASHER,FLAT PART OF KIT P/N 57K3541. UOC:AVY,A13,A14,A24,A25,A26,A27,BVY, B16,B17,B18,B24,B25,C17,HVY,H13,H14, H16,H17,H18,H21,H24,H25,H26,H27,H28, NNN	2
12	PAOZZ	5310000614651	19207	12387349-43	NUT,SELF-LOCKING,HE PART OF KIT P/N 57K3541..... UOC:AVY,A13,A14,A24,A25,A26,A27,BVY, B16,B17,B18,B24,B25,C17,HVY,H13,H14, H16,H17,H18,H21,H24,H25,H26,H27,H28, NNN	6
13	PAOZZ	5310009359021	96906	MS51943-35	NUT,SELF-LOCKING,HE PART OF KIT P/N 57K3541..... UOC:AVY,A13,A14,A24,A25,A26,A27,BVY, B16,B17,B18,B24,B25,C17,HVY,H13,H14, H16,H17,H18,H21,H24,H25,H26,H27,H28, NNN	4
14	PAOZZ	5305008213869	80204	B1821BH038C175N	SCREW,CAP,HEXAGON H PART OF KIT P/N 57K3541..... UOC:AVY,A13,A14,A24,A25,A26,A27,BVY, B16,B17,B18,B24,B25,C17,HVY,H13,H14, H16,H17,H18,H21,H24,H25,H26,H27,H28, NNN	3
15	PAOZZ		0GZB7	983-92-52000	SPACER PART OF KIT P/N 57K3541..... UOC:AVY,A13,A14,A24,A25,A26,A27,BVY, B16,B17,B18,B24,B25,C17,HVY,H13,H14, H16,H17,H18,H21,H24,H25,H26,H27,H28, NNN	3

END OF FIGURE

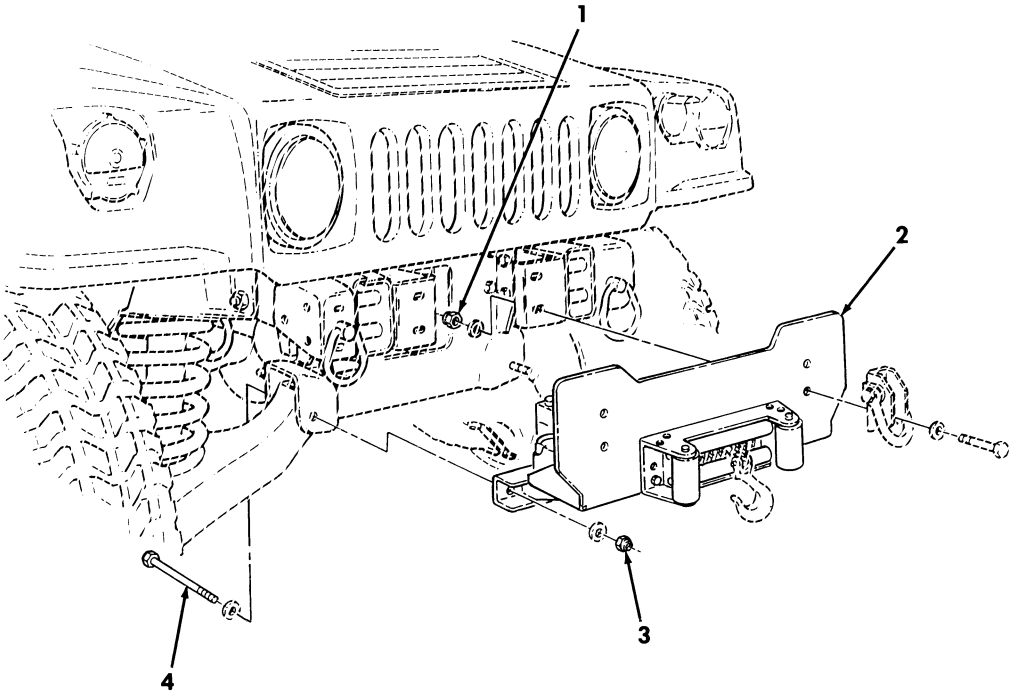

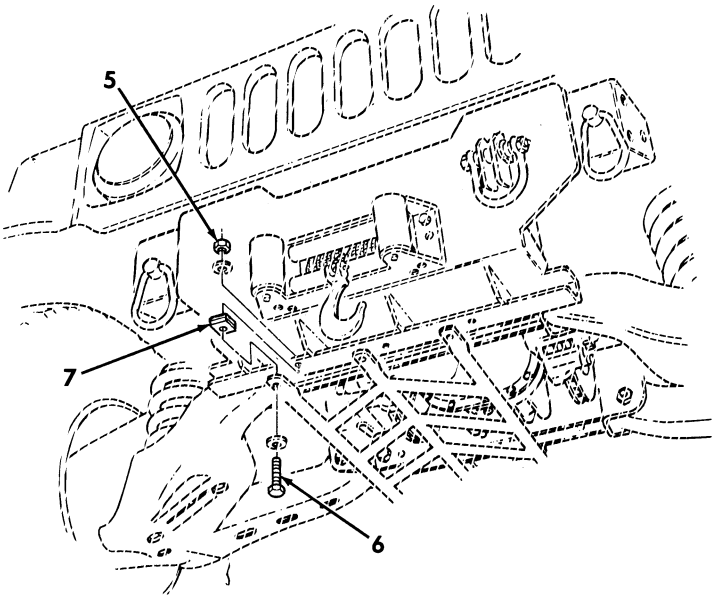

Figure 471. 10,500 Lb Hydraulic Winch Accessory Kit.

(1) ITEM NO	(2) SMR CODE	(3) NSN	(4) CAGEC	(5) PART NUMBER	(6) DESCRIPTION AND USABLE ON CODES(UOC)	(7) QTY
					GROUP 3307 SPECIAL PURPOSE KITS	
					FIG. 471 10,500 LB HYDRAULIC WINCH ACCESSORY KIT	
1	PAOZZ	5310004883889	96906	MS51943-39	NUT,SELF-LOCKING,HE PART OF KIT P/N 57K3541..... UOC:AVY,A13,A14,A24,A25,A26,A27,BVY, B16,B17,B18,B24,B25,C17,HVY,H13,H14, H16,H17,H18,H21,H24,H25,H26,H27,H28, NNN	4
2	PAOZZ	2590014743326	0GZB7	983-75-50050CVB	WINCH,DRUM,VEHICULA PART OF KIT P/N 57K3541..... UOC:AVY,A13,A14,A24,A25,A26,A27,BVY, B16,B17,B18,B24,B25,C17,HVY,H13,H14, H16,H17,H18,H21,H24,H25,H26,H27,H28, NNN	1
3	PAOZZ	5310004093333	96906	MS51943-45	NUT,SELF-LOCKING,HE PART OF KIT P/N 57K3541..... UOC:AVY,A13,A14,A24,A25,A26,A27,BVY, B16,B17,B18,B24,B25,C17,HVY,H13,H14, H16,H17,H18,H21,H24,H25,H26,H27,H28, NNN	2
4	PAOZZ	5305009474363	80204	B1821BH075C550N	SCREW,CAP,HEXAGON H PART OF KIT P/N 57K3541..... UOC:AVY,A13,A14,A24,A25,A26,A27,BVY, B16,B17,B18,B24,B25,C17,HVY,H13,H14, H16,H17,H18,H21,H24,H25,H26,H27,H28, NNN	2
5	PAOZZ	5310009359021	96906	MS51943-35	NUT,SELF-LOCKING,HE PART OF KIT P/N 57K3541..... UOC:AVY,A13,A14,A24,A25,A26,A27,BVY, B16,B17,B18,B24,B25,C17,HVY,H13,H14, H16,H17,H18,H21,H24,H25,H26,H27,H28, NNN	4
6	PAOZZ	5305008213869	80204	B1821BH038C175N	SCREW,CAP,HEXAGON H PART OF KIT P/N 57K3541..... UOC:AVY,A13,A14,A24,A25,A26,A27,BVY, B16,B17,B18,B24,B25,C17,HVY,H13,H14, H16,H17,H18,H21,H24,H25,H26,H27,H28, NNN	3
7	PAOZZ		0GZB7	983-92-52000	SPACER,PLATE PART OF KIT P/N 57K3541..... UOC:AVY,A13,A14,A24,A25,A26,A27,BVY, B16,B17,B18,B24,B25,C17,HVY,H13,H14, H16,H17,H18,H21,H24,H25,H26,H27,H28, NNN	3
KIT	PAOZZ	2590014567879	19207	57K3541	PARTS KIT,WINCH..... UOC:AVY,A13,A14,A24,A25,A26,A27,BVY, B16,B17,B18,B24,B25,C17,HVY,H13,H14, H16,H17,H18,H21,H24,H25,H26,H27,H28, NNN	1
					ADAPTER,CONNECTOR (1) 469-10	

(1) ITEM NO	(2) SMR CODE	(3) NSN	(4) CAGEC	(5) PART NUMBER	(6) DESCRIPTION AND USABLE ON CODES(UOC)	(7) QTY
					ADAPTER,CONNECTOR (1) 469-11	
					BLOCK,TACKLE (1) 469-9	
					BRACKET,R.H.TOW HOO(1) 470-9	
					BRACKET,L.H.TOW HOO(1) 470-9	
					CABLE ASSEMBLY,SPEC(1) 469-3	
					CIRCUIT BREAKER (1) 469-13	
					CONTROL,REEL (1) 469-6	
					DECAL (1) 469-5	
					DECAL (1) 470-6	
					HOSE ASSEMBLY,NONME(1) 470-1	
					HOSE ASSEMBLY,NONME(1) 470-2	
					LEAD,ELECTRICAL (1) 469-1	
					LEAD,ELECTRICAL (1) 470-5	
					NUT,SELF-LOCKING,HE(4) 471-1	
					NUT,SELF-LOCKING,HE(6) 470-12	
					NUT,SELF-LOCKING,HE(2) 471-3	
					NUT,SELF-LOCKING,HE(4) 470-13	
					NUT,SELF-LOCKING,HE(4) 471-5	
					O-RING (2) 470-3	
					SCREW,CAP,HEXAGON H(3) 470-14	
					SCREW,CAP,HEXAGON H(6) 470-8	
					SCREW,CAP,HEXAGON H(2) 471-4	
					SCREW,CAP,HEXAGON H(3) 471-6	
					SCREW,TAPPING (2) 469-12	
					SCREW,TAPPING (4) 469-4	
					SPACER (3) 470-15	
					SPACER,PLATE (3) 471-7	
					STRAP,RETAINING (1) 469-8	
					STRAP,TIEDOWN,ELECT(6) 469-2	
					STRAP,TIEDOWN,ELECT(2) 470-7	
					STRAP,TIEDOWN,ELECT(5) 470-4	
					TUBE ASSEMBLY,METAL(1) 469-7	
					WASHER,FLAT (2) 470-10	
					WASHER,FLAT (2) 470-11	
					WINCH,DRUM,VEHICULA(1) 471-2	

END OF FIGURE

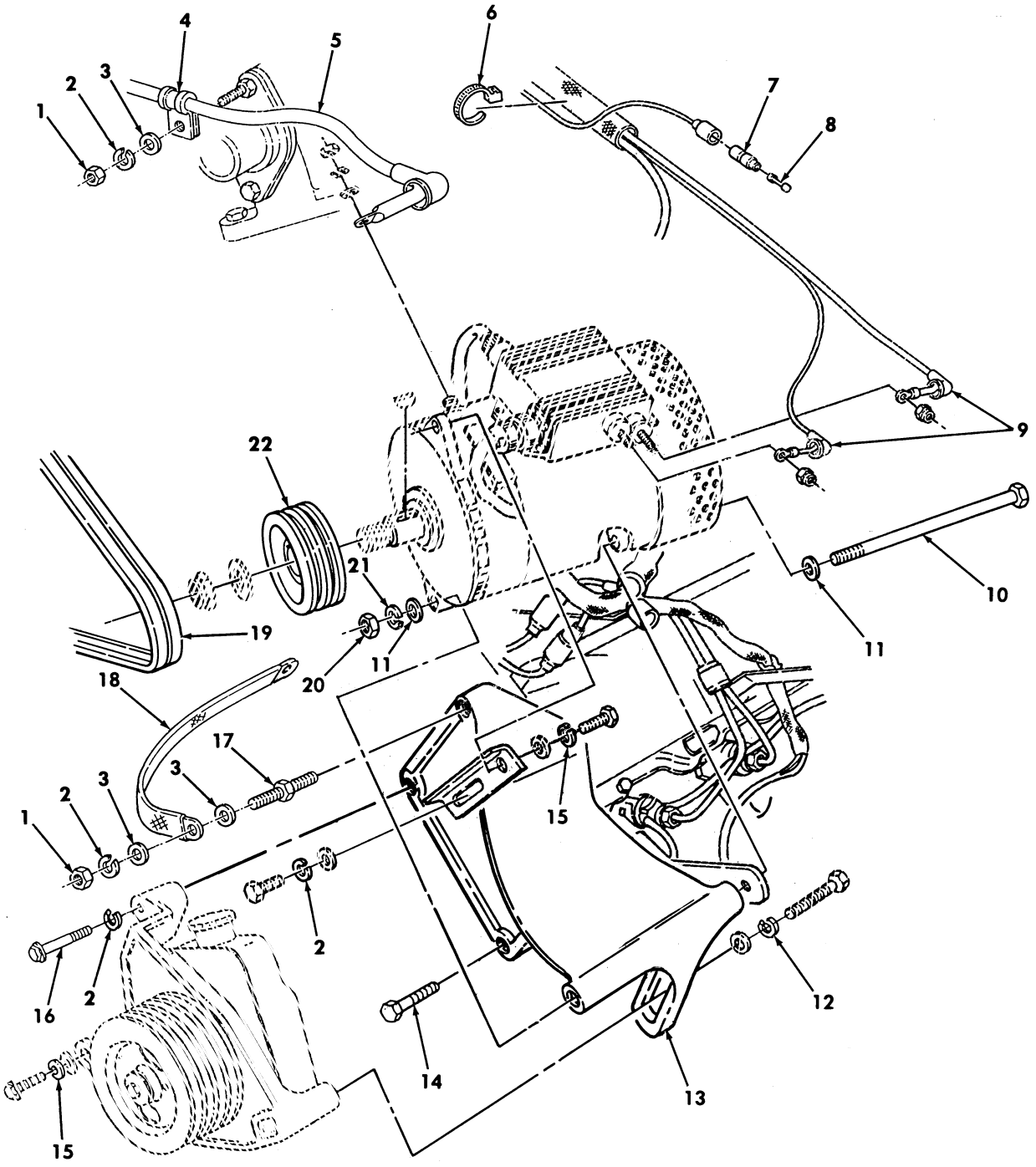

Figure 472. 100 AMP Dual Voltage Alternator and Regulator Mounting Hardware Kit.

(1) ITEM NO	(2) SMR CODE	(3) NSN	(4) CAGEC	(5) PART NUMBER	(6) DESCRIPTION AND USABLE ON CODES(UOC)	(7) QTY
					GROUP 3307 SPECIAL PURPOSE KITS	
					FIG. 472 100 AMP DUAL VOLTAGE ALTERNATOR AND REGULATOR MOUNTING HARDWARE KIT	
1	PAOZZ	5310013958747	80204	B18241B100F	NUT,PLAIN,HEXAGON PART OF KIT P/N 57K3519..... UOC:A11,A13,A14,A20,A24,A25,A26,A27, B17,B18,H11,H13,H14,H17,H18,H20,H21, H24,H25,H26,H27,H28,MMM	2
2	PAOZZ	5310012067306	7X677	11500207	WASHER,LOCK PART OF KIT P/N 57K3519. UOC:A11,A13,A14,A20,A24,A25,A26,A27, B17,B18,H11,H13,H14,H17,H18,H20,H21, H24,H25,H26,H27,H28,MMM	4
3	PAOZZ	5310012101587	7X677	11500256	WASHER,FLAT PART OF KIT P/N 57K3519. UOC:A11,A13,A14,A20,A24,A25,A26,A27, B17,B18,H11,H13,H14,H17,H18,H20,H21, H24,H25,H26,H27,H28,MMM	4
4	PAOZZ	5340000538994	96906	MS21333-126	CLAMP,LOOP PART OF KIT P/N 57K3519.. UOC:A11,A13,A14,A20,A24,A25,A26,A27, B17,B18,H11,H13,H14,H17,H18,H20,H21, H24,H25,H26,H27,H28,MMM	3
5	PAOZZ	6150014676716	19207	12446821-2	CABLE ASSEMBLY,SPEC PART OF KIT P/N 57K3519..... UOC:A11,A13,A14,A20,A24,A25,A26,A27, B17,B18,H11,H13,H14,H17,H18,H20,H21, H24,H25,H26,H27,H28,MMM	1
6	PAOZZ	5975010345871	96906	MS3367-7-0	STRAP,TIEDOWN,ELECT PART OF KIT P/N 57K3519..... UOC:A11,A13,A14,A20,A24,A25,A26,A27, B17,B18,H11,H13,H14,H17,H18,H20,H21, H24,H25,H26,H27,H28,MMM	2
7	PAOZZ	5935008338561	19207	8338561	SHELL,ELECTRICAL CO PART OF KIT P/N 57K3519..... UOC:A11,A13,A14,A20,A24,A25,A26,A27, B17,B18,H11,H13,H14,H17,H18,H20,H21, H24,H25,H26,H27,H28,MMM	1
8	PAOZZ	5935002140904	19207	7982907	DUMMY CONNECTOR,PLU PART OF KIT P/N 57K3519..... UOC:A11,A13,A14,A20,A24,A25,A26,A27, B17,B18,H11,H13,H14,H17,H18,H20,H21, H24,H25,H26,H27,H28,MMM	1
9	PAOZZ	5975014695558	77060	0298 4033	CABLE NIPPLE,ELECTR PART OF KIT P/N 57K3519..... UOC:A11,A13,A14,A20,A24,A25,A26,A27, B17,B18,H11,H13,H14,H17,H18,H20,H21, H24,H25,H26,H27,H28,MMM	2
10	PAOZZ	5305014299149	80204	B1821BH044F975N	SCREW,CAP,HEXAGON H PART OF KIT P/N 57K3519..... UOC:A11,A13,A14,A20,A24,A25,A26,A27, B17,B18,H11,H13,H14,H17,H18,H20,H21, H24,H25,H26,H27,H28,MMM	1

(1) ITEM NO	(2) SMR CODE	(3) NSN	(4) CAGEC	(5) PART NUMBER	(6) DESCRIPTION AND USABLE ON CODES(UOC)	(7) QTY
11	PAOZZ	5310008094085	24617	9420022	WASHER,FLAT PART OF KIT P/N 57K3519. UOC:A11,A13,A14,A20,A24,A25,A26,A27, B17,B18,H11,H13,H14,H17,H18,H20,H21, H24,H25,H26,H27,H28,MMM	2
12	PAOZZ	5310000116121	29510	120384	WASHER,LOCK PART OF KIT P/N 57K3519. UOC:A11,A13,A14,A20,A24,A25,A26,A27, B17,B18,H11,H13,H14,H17,H18,H20,H21, H24,H25,H26,H27,H28,MMM	1
13	PAOZZ	5340014484245	19207	12342036	BRACKET,MOUNTING PART OF KIT P/N 57K3519..... UOC:A11,A13,A14,A20,A24,A25,A26,A27, B17,B18,H11,H13,H14,H17,H18,H20,H21, H24,H25,H26,H27,H28,MMM	1
14	PAOZZ	5306012638889	19207	12340845-2	BOLT,MACHINE PART OF KIT P/N 57K3519 UOC:A11,A13,A14,A20,A24,A25,A26,A27, B17,B18,H11,H13,H14,H17,H18,H20,H21, H24,H25,H26,H27,H28,MMM	1
15	PAOZZ	5310006379541	96906	MS35338-46	WASHER,LOCK PART OF KIT P/N 57K3519. UOC:A11,A13,A14,A20,A24,A25,A26,A27, B17,B18,H11,H13,H14,H17,H18,H20,H21, H24,H25,H26,H27,H28,MMM	1
16	PAOZZ	5306012643531	19207	12340845-4	BOLT,MACHINE PART OF KIT P/N 57K3519 UOC:A11,A13,A14,A20,A24,A25,A26,A27, B17,B18,H11,H13,H14,H17,H18,H20,H21, H24,H25,H26,H27,H28,MMM	1
17	PAOZZ	5307014655796	19207	12339406-4	STUD,SHOULDERED PART OF KIT P/N 57K3519..... UOC:A11,A13,A14,A20,A24,A25,A26,A27, B17,B18,H11,H13,H14,H17,H18,H20,H21, H24,H25,H26,H27,H28,MMM	1
18	PAOZZ	6150014667528	19207	12446821-6	CABLE ASSEMBLY,SPEC PART OF KIT P/N 57K3519..... UOC:A11,A13,A14,A20,A24,A25,A26,A27, B17,B18,H11,H13,H14,H17,H18,H20,H21, H24,H25,H26,H27,H28,MMM	1
19	PAOZZ	3030012826968	34623	12339359-12	BELTS,V,MATCHED SET PART OF KIT P/N 57K3519..... UOC:A11,A13,A14,A20,A24,A25,A26,A27, B17,B18,H11,H13,H14,H17,H18,H20,H21, H24,H25,H26,H27,H28,MMM	1
20	PAOZZ	5310014573171	24617	9417028	NUT,PLAIN,HEXAGON PART OF KIT P/N 57K3519..... UOC:A11,A13,A14,A20,A24,A25,A26,A27, B17,B18,H11,H13,H14,H17,H18,H20,H21, H24,H25,H26,H27,H28,MMM	1
21	PAOZZ	5310002090965	96906	MS35338-47	WASHER,LOCK PART OF KIT P/N 57K3519. UOC:A11,A13,A14,A20,A24,A25,A26,A27, B17,B18,H11,H13,H14,H17,H18,H20,H21, H24,H25,H26,H27,H28,MMM	1
22	PAOZZ	3020012048132	19207	12339412	PULLEY,GROOVE PART OF KIT P/N 57K3519..... UOC:A11,A13,A14,A20,A24,A25,A26,A27, B17,B18,H11,H13,H14,H17,H18,H20,H21,	1

(1) ITEM NO	(2) SMR CODE	(3) NSN	(4) CAGEC	(5) PART NUMBER	(6) DESCRIPTION AND USABLE ON CODES(UOC)	(7) QTY
					H24,H25,H26,H27,H28,MMM	

END OF FIGURE

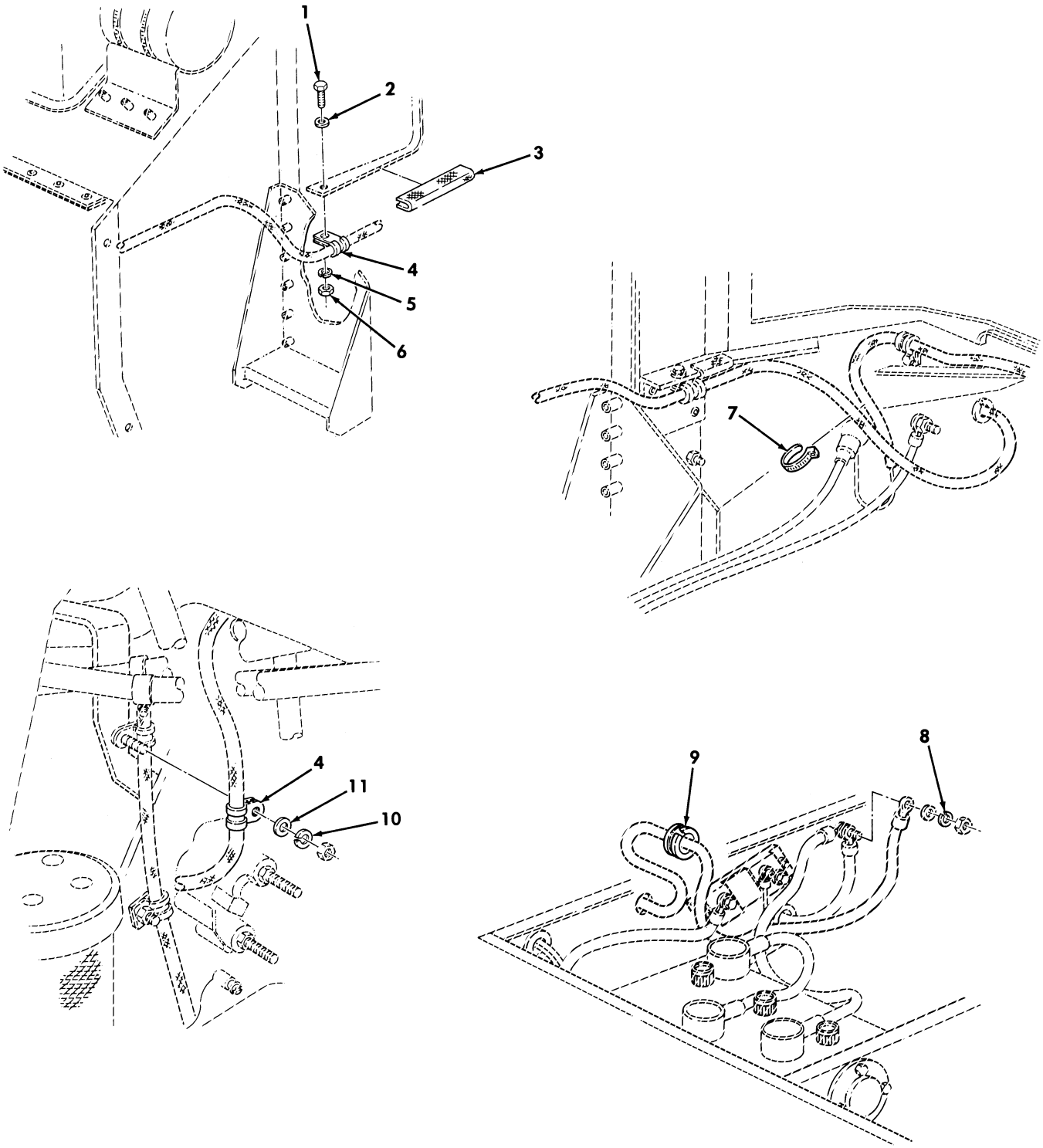

Figure 473. 100/200 AMP Dual Voltage Alternator and Regulator Mounting Hardware Kit.

(1) ITEM NO	(2) SMR CODE	(3) NSN	(4) CAGEC	(5) PART NUMBER	(6) DESCRIPTION AND USABLE ON CODES(UOC)	(7) QTY
					GROUP 3307 SPECIAL PURPOSE KITS	
					FIG. 473 100/200 AMP DUAL VOLTAGE ALTERNATOR AND REGULATOR MOUNTING HARDWARE KIT	
1	PAOZZ	5306002264827	80204	B1821BH031C100N	BOLT,MACHINE PART OF KIT P/N 57K3520 PART OF KIT P/N 57K3519..... UOC:A11,A13,A14,A20,A24,A25,A26,A27, B17,B18,H11,H13,H14,H17,H18,H20,H21, H24,H25,H26,H27,H28,MMM	1
2	PAOZZ	5310000814219	96906	MS27183-12	WASHER,FLAT PART OF KIT P/N 57K3520 PART OF KIT P/N 57K3519..... UOC:A11,A13,A14,A20,A24,A25,A26,A27, B17,B18,H11,H13,H14,H17,H18,H20,H21, H24,H25,H26,H27,H28,MMM	1
3	MOOZZ		19207	12340103-4	BEZEL,AUTOMOTIVE TR MAKE FROM BEZEL, P/N 12340103,4 INCHES LONG PART OF KIT P/N 57K3519 PART OF KIT P/N 57K3520..... UOC:A11,A13,A14,A20,A24,A25,A26,A27, B17,B18,H11,H13,H14,H17,H18,H20,H21, H24,H25,H26,H27,H28,MMM	1
4	PAOZZ	5340007022848	96906	MS21333-128	CLAMP,LOOP PART OF KIT P/N 57K3520.. UOC:A11,A13,A14,A20,A24,A25,A26,A27, B17,B18,H11,H13,H14,H17,H18,H20,H21, H24,H25,H26,H27,H28,MMM	2
5	PAOZZ	5310004079566	96906	MS-35338-45	WASHER,LOCK PART OF KIT P/N 57K3520 PART OF KIT P/N 57K3519..... UOC:A11,A13,A14,A20,A24,A25,A26,A27, B17,B18,H11,H13,H14,H17,H18,H20,H21, H24,H25,H26,H27,H28,MMM	1
6	PAOZZ	5310009318167	96906	MS51967-6	NUT,PLAIN,HEXAGON PART OF KIT P/N 57K3520 PART OF KIT P/N 57K3519..... UOC:A11,A13,A14,A20,A24,A25,A26,A27, B17,B18,H11,H13,H14,H17,H18,H20,H21, H24,H25,H26,H27,H28,MMM	1
7	PAOZZ	5975010345871	96906	MS3367-7-0	STRAP,TIEDOWN,ELECT PART OF KIT P/N 57K3520 PART OF KIT P/N 57K3519..... UOC:A11,A13,A14,A20,A24,A25,A26,A27, B17,B18,H11,H13,H14,H17,H18,H20,H21, H24,H25,H26,H27,H28,MMM	1
8	PAOZZ	5310011867066	13445	85031	WASHER,LOCK PART OF KIT P/N 57K3520 PART OF KIT P/N 57K3519..... UOC:A11,A13,A14,A20,A24,A25,A26,A27, B17,B18,H11,H13,H14,H17,H18,H20,H21, H24,H25,H26,H27,H28,MMM	1
9	PAOZZ	5325002766343	96906	MS35489-23	GROMMET,NONMETALLIC PART OF KIT P/N 57K3520 PART OF KIT P/N 57K3519..... UOC:A11,A13,A14,A20,A24,A25,A26,A27, B17,B18,H11,H13,H14,H17,H18,H20,H21, H24,H25,H26,H27,H28,MMM	1
10	PAOZZ	5310012067306	7X677	11500207	WASHER,LOCK PART OF KIT P/N 57K3520	1

(1) ITEM NO	(2) SMR CODE	(3) NSN	(4) CAGEC	(5) PART NUMBER	(6) DESCRIPTION AND USABLE ON CODES(UOC)	(7) QTY
					PART OF KIT P/N 57K3519..... UOC:A11,A13,A14,A20,A24,A25,A26,A27, B17,B18,H11,H13,H14,H17,H18,H20,H21, H24,H25,H26,H27,H28,MMM	
11	PAOZZ	5310012101587	7X677	11500256	WASHER,FLAT PART OF KIT P/N 57K3520	1
					PART OF KIT P/N 57K3519..... UOC:A11,A13,A14,A20,A24,A25,A26,A27, B17,B18,H11,H13,H14,H17,H18,H20,H21, H24,H25,H26,H27,H28,MMM	

END OF FIGURE

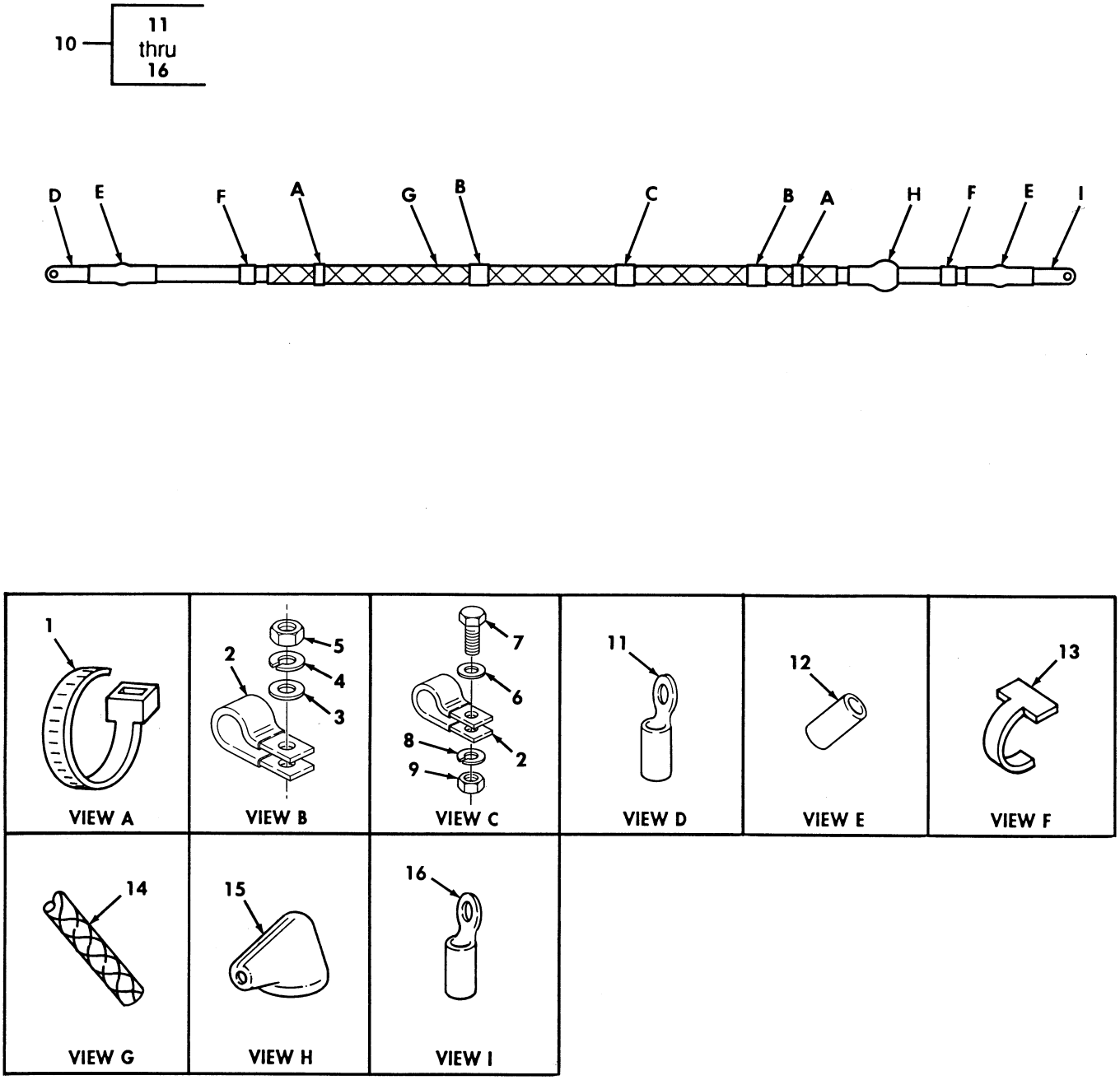

Figure 474. 100/200 AMP Dual Voltage Alternator Wiring Harness.

(1) ITEM NO	(2) SMR CODE	(3) NSN	(4) CAGEC	(5) PART NUMBER	(6) DESCRIPTION AND USABLE ON CODES(UOC)	(7) QTY
					GROUP 3307 SPECIAL PURPOSE KITS	
					FIG. 474 100/200 AMP DUAL VOLTAGE ALTERNATOR WIRING HARNESS	
1	PAOZZ	5975010345871	96906	MS3367-7-0	STRAP,TIEDOWN,ELECT PART OF KIT P/N 57K3519,PART OF KIT P/N 57K3520..... UOC:A11,A13,A14,A20,A24,A25,A26,A27, B17,B18,H11,H13,H14,H17,H18,H20,H21, H24,H25,H26,H27,H28,MMM	2
2	PAOZZ	5340000538994	96906	MS21333-126	CLAMP,LOOP 100AMP PART OF KIT P/N 57K3519..... UOC:A11,A13,A14,A20,A24,A25,A26,A27, B17,B18,H11,H13,H14,H17,H18,H20,H21, H24,H25,H26,H27,H28,MMM	3
2	PAOZZ	5340007022848	96906	MS21333-128	CLAMP,LOOP 200AMP PART OF KIT P/N 57K3520..... UOC:A11,A13,A14,A20,A24,A25,A26,A27, B17,B18,H11,H13,H14,H17,H18,H20,H21, H24,H25,H26,H27,H28,MMM	3
3	PAOZZ	5310012101587	7X677	11500256	WASHER,FLAT PART OF KIT P/N 57K3519, PART OF KIT P/N 57K3520..... UOC:A11,A13,A14,A20,A24,A25,A26,A27, B17,B18,H11,H13,H14,H17,H18,H20,H21, H24,H25,H26,H27,H28,MMM	2
4	PAOZZ	5310012067306	7X677	11500207	WASHER,LOCK PART OF KIT P/N 57K3519, PART OF KIT P/N 57K3520..... UOC:A11,A13,A14,A20,A24,A25,A26,A27, B17,B18,H11,H13,H14,H17,H18,H20,H21, H24,H25,H26,H27,H28,MMM	2
5	PAOZZ	5310013958747	80204	B18241B100F	NUT,PLAIN,HEXAGON PART OF KIT P/N 57K3519,PART OF KIT P/N 57K3520..... UOC:A11,A13,A14,A20,A24,A25,A26,A27, B17,B18,H11,H13,H14,H17,H18,H20,H21, H24,H25,H26,H27,H28,MMM	2
6	PAOZZ	5310000814219	96906	MS27183-12	WASHER,FLAT PART OF KIT P/N 57K3519, PART OF KIT P/N 57K3520..... UOC:A11,A13,A14,A20,A24,A25,A26,A27, B17,B18,H11,H13,H14,H17,H18,H20,H21, H24,H25,H26,H27,H28,MMM	1
7	PAOZZ	5306002264827	80204	B1821BH031C100N	BOLT,MACHINE PART OF KIT P/N 57K3519 ,PART OF KIT P/N 57K3520..... UOC:A11,A13,A14,A20,A24,A25,A26,A27, B17,B18,H11,H13,H14,H17,H18,H20,H21, H24,H25,H26,H27,H28,MMM	1
8	PAOZZ	5310004079566	96906	MS35338-45	WASHER,LOCK PART OF KIT P/N 57K3519, PART OF KIT P/N 57K3520..... UOC:A11,A13,A14,A20,A24,A25,A26,A27, B17,B18,H11,H13,H14,H17,H18,H20,H21, H24,H25,H26,H27,H28,MMM	1
9	PAOZZ	5310009318167	96906	MS51967-6	NUT,PLAIN,HEXAGON PART OF KIT P/N 57K3519,PART OF KIT P/N 57K3520..... UOC:A11,A13,A14,A20,A24,A25,A26,A27,	1

(1) ITEM NO	(2) SMR CODE	(3) NSN	(4) CAGEC	(5) PART NUMBER	(6) DESCRIPTION AND USABLE ON CODES(UOC)	(7) QTY
					B17,B18,H11,H13,H14,H17,H18,H20,H21, H24,H25,H26,H27,H28,MMM	
10	PAOZZ	6150014173411	19207	12446821-2	CABLE ASSEMBLY,SPEC 100 AMP PART OF KIT P/N 57K3519..... UOC:A11,A13,A14,A20,A24,A25,A26,A27, B17,B18,H11,H13,H14,H17,H18,H20,H21, H24,H25,H26,H27,H28,MMM	1
10	PAOZZ	6150014167899	19207	12446825	LEAD,ELECTRICAL 200AMP PART OF KIT P/N 57K3520..... UOC:A11,A13,A14,A20,A24,A25,A26,A27, B17,B18,H11,H13,H14,H17,H18,H20,H21, H24,H25,H26,H27,H28,MMM	1
11	PAOZZ	5940011704956	19207	8689221	.TERMINAL LUG 100AMP PART OF KIT P/N 57K3519..... UOC:A11,A13,A14,A20,A24,A25,A26,A27, B17,B18,H11,H13,H14,H17,H18,H20,H21, H24,H25,H26,H27,H28,MMM	1
11	PAOZZ	5940007355520	19207	7355520	.TERMINAL,LUG 200AMP PART OF KIT P/N 57K3520..... UOC:A11,A13,A14,A20,A24,A25,A26,A27, B17,B18,H11,H13,H14,H17,H18,H20,H21, H24,H25,H26,H27,H28,MMM	1
12	MOOZZ		19207	M23053/4-304-2	.INSULATION SLEEVING MAKE FROM INSULATION,P/N M23053/4-304-2,2 INCHES LONG,PART OF KIT P/N 57K3519, PART OF KIT P/N 57K3520..... UOC:A11,A13,A14,A20,A24,A25,A26,A27, B17,B18,H11,H13,H14,H17,H18,H20,H21, H24,H25,H26,H27,H28,MMM	2
13	PAOZZ	9905008933570	81349	M43436/1-3	.BAND,MARKER PART OF KIT P/N 57K3519,PART OF KIT P/N 57K3520..... UOC:A11,A13,A14,A20,A24,A25,A26,A27, B17,B18,H11,H13,H14,H17,H18,H20,H21, H24,H25,H26,H27,H28,MMM	2
14	MOOZZ		9D117	SAEJ562	.LOOM NONMETALLIC MAKE FROM TUBING, P/N AE208-10,LENGTH TO SUIT,PART OF KIT P/N 57K3519,PART OF KIT P/N 57K3520..... UOC:A11,A13,A14,A20,A24,A25,A26,A27, B17,B18,H11,H13,H14,H17,H18,H20,H21, H24,H25,H26,H27,H28,MMM	1
15	PAOZZ		19207	12460416	.CABLE,NIPPLE,ELECTR 100 AMP PART OF KIT P/N 57K3519..... UOC:A11,A13,A14,A20,A24,A25,A26,A27, B17,B18,H11,H13,H14,H17,H18,H20,H21, H24,H25,H26,H27,H28,MMM	1
15	PAOZZ	5975012089618	19207	12339710	.CABLE NIPPLE,ELECTR 200AMP PART OF KIT P/N 57K3520..... UOC:A11,A13,A14,A20,A24,A25,A26,A27, B17,B18,H11,H13,H14,H17,H18,H20,H21, H24,H25,H26,H27,H28,MMM	1
16	PAOZZ	5940001152678	96906	MS20659-111	.TERMINAL,LUG 100AMP PART OF KIT P/N 57K3519.....	1

(1) ITEM NO	(2) SMR CODE	(3) NSN	(4) CAGEC	(5) PART NUMBER	(6) DESCRIPTION AND USABLE ON CODES(UOC)	(7) QTY
					UOC:A11,A13,A14,A20,A24,A25,A26,A27, B17,B18,H11,H13,H14,H17,H18,H20,H21, H24,H25,H26,H27,H28,MMM	
16	PAOZZ	5940001155006	96906	MS25036-133	.TERMINAL,LUG 200AMP PART OF KIT P/N 57K3520.....	1
					UOC:A11,A13,A14,A20,A24,A25,A26,A27, B17,B18,H11,H13,H14,H17,H18,H20,H21, H24,H25,H26,H27,H28,MMM	
KIT	PAOZZ	2920014551626	19207	57K3519	PARTS KIT ENGINE.GE.....	1
					UOC:A11,A13,A14,A20,A24,A25,A26,A27, B17,B18,H11,H13,H14,H17,H18,H20,H21, H24,H25,H26,H27,H28,MMM	
					BAND,MARKER (2) 474-13	
					BELTS,V,MATCHED SET(1) 472-19	
					BEZEL,AUTOMOTIVE TR(1) 473-3	
					BOLT,MACHINE (1) 472-14	
					BOLT,MACHINE (1) 472-16	
					BOLT,MACHINE (1) 473-1	
					BOLT,MACHINE (1) 474-7	
					BRACKET,MOUNTING (1) 472-13	
					CABLE ASSEMBLY,SPEC(1) 472-5	
					CABLE ASSEMBLY,SPEC(1) 472-18	
					CABLE ASSEMBLY,SPEC(1) 474-10	
					CABLE NIPPLE,ELECTR(2) 472-9	
					CABLE NIPPLE,ELECTR(1) 474-15	
					CLAMP,LOOP (3) 472-4	
					CLAMP,LOOP (3) 474-2	
					DUMMY CONNECTOR,PLU(1) 472-8	
					GROMMET,NONMETALLIC(1) 473-9	
					INSULATION SLEEVING(2) 474-12	
					LOOM NONMETALLIC (1) 474-14	
					NUT,PLAIN,HEXAGON (2) 472-1	
					NUT,PLAIN,HEXAGON (1) 472-20	
					NUT,PLAIN,HEXAGON (1) 473-6	
					NUT,PLAIN,HEXAGON (2) 474-5	
					NUT,PLAIN,HEXAGON (1) 474-9	
					PULLEY,GROOVE (1) 472-22	
					SCREW,CAP,HEXAGON H(1) 472-10	
					SHELL,ELECTRICAL CO(1) 472-7	
					STRAP,TIEDOWN,ELECT(2) 472-6	
					STRAP,TIEDOWN,ELECT(1) 473-7	
					STRAP,TIEDOWN,ELECT(2) 474-1	
					STUD,SHOULDERED (1) 472-17	
					TERMINAL,LUG (1) 474-11	
					TERMINAL,LUG (1) 474-16	
					WASHER,FLAT (4) 472-3	
					WASHER,FLAT (2) 472-11	
					WASHER,FLAT (1) 473-2	
					WASHER,FLAT (1) 473-11	
					WASHER,FLAT (2) 474-3	
					WASHER,FLAT (1) 474-6	
					WASHER,LOCK (4) 472-2	
					WASHER,LOCK (1) 472-12	

(1) ITEM NO	(2) SMR CODE	(3) NSN	(4) CAGEC	(5) PART NUMBER	(6) DESCRIPTION AND USABLE ON CODES(UOC)	(7) QTY
					WASHER,LOCK (1) 472-15	
					WASHER,LOCK (1) 472-21	
					WASHER,LOCK (1) 473-5	
					WASHER,LOCK (1) 473-8	
					WASHER,LOCK (1) 473-10	
					WASHER,LOCK (2) 474-4	
					WASHER,LOCK (1) 474-8	

END OF FIGURE

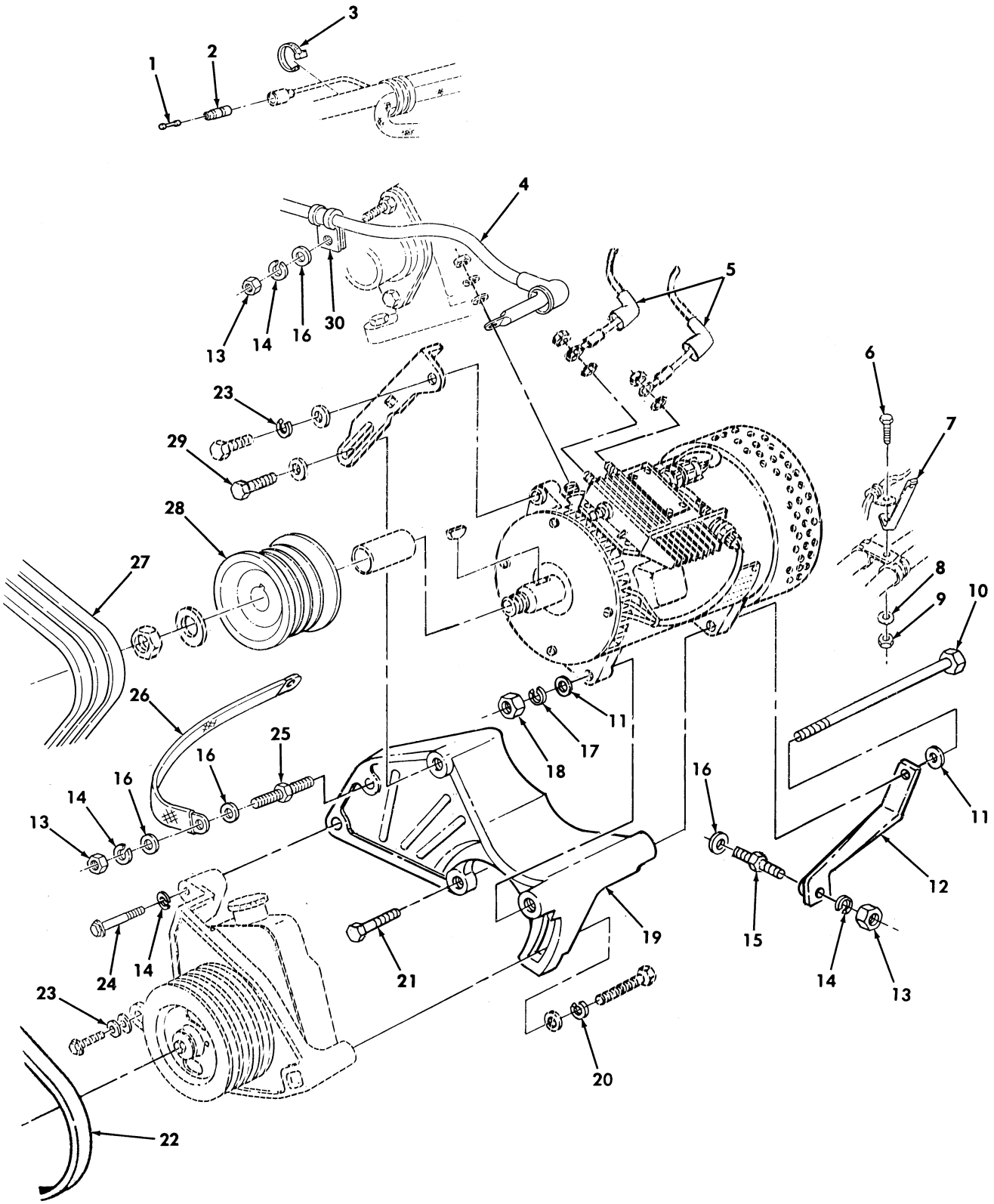

Figure 475. 200 AMP Dual Voltage Alternator and Regulator Mounting Hardware Kit.

(1) ITEM NO	(2) SMR CODE	(3) NSN	(4) CAGEC	(5) PART NUMBER	(6) DESCRIPTION AND USABLE ON CODES(UOC)	(7) QTY
					GROUP 3307 SPECIAL PURPOSE KITS	
					FIG. 475 200 AMP DUAL VOLTAGE ALTERNATOR AND REGULATOR MOUNTING HARDWARE KIT	
1	PAOZZ	5935002140904	19207	7982907	DUMMY CONNECTOR,PLU PART OF KIT P/N 57K3520..... UOC:A11,A13,A14,A20,A24,A25,A26,A27, B17,B18,H11,H13,H14,H17,H18,H20,H21, H24,H25,H26,H27,H28,MMM	1
2	PAOZZ	5935008338561	19207	8338561	SHELL,ELECTRICAL CO PART OF KIT P/N 57K3520..... UOC:A11,A13,A14,A20,A24,A25,A26,A27, B17,B18,H11,H13,H14,H17,H18,H20,H21, H24,H25,H26,H27,H28,MMM	1
3	PAOZZ	5975010345871	96906	MS3367-7-0	STRAP,TIEDOWN,ELECT PART OF KIT P/N 57K3520..... UOC:A11,A13,A14,A20,A24,A25,A26,A27, B17,B18,H11,H13,H14,H17,H18,H20,H21, H24,H25,H26,H27,H28,MMM	1
4	PAOZZ	6150014167899	19207	12446825	LEAD,ELECTRICAL PART OF KIT P/N 57K3520..... UOC:A11,A13,A14,A20,A24,A25,A26,A27, B17,B18,H11,H13,H14,H17,H18,H20,H21, H24,H25,H26,H27,H28,MMM	1
5	PAOZZ	5975014695558	77060	0298 4033	CABLE NIPPLE,ELECTR PART OF KIT P/N 57K3520..... UOC:A11,A13,A14,A20,A24,A25,A26,A27, B17,B18,H11,H13,H14,H17,H18,H20,H21, H24,H25,H26,H27,H28,MMM	2
6	PAOZZ	5305002253843	80204	B1821BH025C100N	SCREW,CAP,HEXAGON H PART OF KIT P/N 57K3520..... UOC:A11,A13,A14,A20,A24,A25,A26,A27, B17,B18,H11,H13,H14,H17,H18,H20,H21, H24,H25,H26,H27,H28,MMM	1
7	PAOZZ	5340012925402	19207	12342076	BRACKET,DOUBLE ANGL PART OF KIT P/N 57K3520..... UOC:A11,A13,A14,A20,A24,A25,A26,A27, B17,B18,H11,H13,H14,H17,H18,H20,H21, H24,H25,H26,H27,H28,MMM	1
8	PAOZZ	5310008094058	96906	MS27183-10	WASHER,FLAT PART OF KIT P/N 57K3520. UOC:A11,A13,A14,A20,A24,A25,A26,A27, B17,B18,H11,H13,H14,H17,H18,H20,H21, H24,H25,H26,H27,H28,MMM	1
9	PAOZZ	5310000614650	96906	MS51943-31	NUT,SELF-LOCKING,HE PART OF KIT P/N 57K3520..... UOC:A11,A13,A14,A20,A24,A25,A26,A27, B17,B18,H11,H13,H14,H17,H18,H20,H21, H24,H25,H26,H27,H28,MMM	1
10	PAOZZ	5305014299149	80204	B1821BH044F975N	SCREW,CAP,HEXAGON H PART OF KIT P/N 57K3520..... UOC:A11,A13,A14,A20,A24,A25,A26,A27,	1

(1) ITEM NO	(2) SMR CODE	(3) NSN	(4) CAGEC	(5) PART NUMBER	(6) DESCRIPTION AND USABLE ON CODES(UOC)	(7) QTY
					B17,B18,H11,H13,H14,H17,H18,H20,H21, H24,H25,H26,H27,H28,MMM	
11	PAOZZ	5310008094085	96906	MS27183-16	WASHER,FLAT PART OF KIT P/N 57K3520. UOC:A11,A13,A14,A20,A24,A25,A26,A27, B17,B18,H11,H13,H14,H17,H18,H20,H21, H24,H25,H26,H27,H28,MMM	2
12	PAOZZ	5340012928404	34623	5935092	BRACKET,MOUNTING PART OF KIT P/N 57K3520..... UOC:A11,A13,A14,A20,A24,A25,A26,A27, B17,B18,H11,H13,H14,H17,H18,H20,H21, H24,H25,H26,H27,H28,MMM	1
13	PAOZZ	5310013958747	80204	B18241B100F	NUT,PLAIN,HEXAGON PART OF KIT P/N 57K3520..... UOC:A11,A13,A14,A20,A24,A25,A26,A27, B17,B18,H11,H13,H14,H17,H18,H20,H21, H24,H25,H26,H27,H28,MMM	3
14	PAOZZ	5310012067306	7X677	11500207	WASHER,LOCK PART OF KIT P/N 57K3520. UOC:A11,A13,A14,A20,A24,A25,A26,A27, B17,B18,H11,H13,H14,H17,H18,H20,H21, H24,H25,H26,H27,H28,MMM	4
15	PAOZZ	5307013153597	19207	12339406-3	STUD,SHOULDERED PART OF KIT P/N 57K3520..... UOC:A11,A13,A14,A20,A24,A25,A26,A27, B17,B18,H11,H13,H14,H17,H18,H20,H21, H24,H25,H26,H27,H28,MMM	1
16	PAOZZ	5310012101587	7X677	11500256	WASHER,FLAT PART OF KIT P/N 57K3520. UOC:A11,A13,A14,A20,A24,A25,A26,A27, B17,B18,H11,H13,H14,H17,H18,H20,H21, H24,H25,H26,H27,H28,MMM	4
17	PAOZZ	5310002090965	96906	MS35338-47	WASHER,LOCK PART OF KIT P/N 57K3520. UOC:A11,A13,A14,A20,A24,A25,A26,A27, B17,B18,H11,H13,H14,H17,H18,H20,H21, H24,H25,H26,H27,H28,MMM	1
18	PAOZZ	5310014573171	24617	9417028	NUT,PLAIN,HEXAGON PART OF KIT P/N 57K3520..... UOC:A11,A13,A14,A20,A24,A25,A26,A27, B17,B18,H11,H13,H14,H17,H18,H20,H21, H24,H25,H26,H27,H28,MMM	1
19	PAOZZ	2590014444365	34623	12338786-1	BRACKET,VEHICULAR C PART OF KIT P/N 57K3520..... UOC:A11,A13,A14,A20,A24,A25,A26,A27, B17,B18,H11,H13,H14,H17,H18,H20,H21, H24,H25,H26,H27,H28,MMM	1
20	PAOZZ	5310000116121	29510	120384	WASHER,LOCK PART OF KIT P/N 57K3520. UOC:A11,A13,A14,A20,A24,A25,A26,A27, B17,B18,H11,H13,H14,H17,H18,H20,H21, H24,H25,H26,H27,H28,MMM	1
21	PAOZZ	5306012638889	19207	12340845-2	BOLT,MACHINE PART OF KIT P/N 57K3520 UOC:A11,A13,A14,A20,A24,A25,A26,A27, B17,B18,H11,H13,H14,H17,H18,H20,H21, H24,H25,H26,H27,H28,MMM	1
22	PAOZZ	3030014526591	19207	12339359-14	BELTING,V PART OF KIT P/N 57K3520... UOC:A11,A13,A14,A20,A24,A25,A26,A27,	1

(1) ITEM NO	(2) SMR CODE	(3) NSN	(4) CAGEC	(5) PART NUMBER	(6) DESCRIPTION AND USABLE ON CODES(UOC)	(7) QTY
					B17,B18,H11,H13,H14,H17,H18,H20,H21, H24,H25,H26,H27,H28,MMM	
23	PAOZZ	5310006379541	96906	MS35338-46	WASHER,LOCK PART OF KIT P/N 57K3520. UOC:A11,A13,A14,A20,A24,A25,A26,A27, B17,B18,H11,H13,H14,H17,H18,H20,H21, H24,H25,H26,H27,H28,MMM	2
24	PAOZZ	5306012643531	19207	12340845-4	BOLT,MACHINE PART OF KIT P/N 57K3520 UOC:A11,A13,A14,A20,A24,A25,A26,A27, B17,B18,H11,H13,H14,H17,H18,H20,H21, H24,H25,H26,H27,H28,MMM	1
25	PAOZZ	5307014084029	19207	12342545	STUD,SHOULDERED PART OF KIT P/N 57K3520..... UOC:A11,A13,A14,A20,A24,A25,A26,A27, B17,B18,H11,H13,H14,H17,H18,H20,H21, H24,H25,H26,H27,H28,MMM	1
26	PAOZZ	5999013725601	19207	12341151	STRIP,ELECTRICAL GR PART OF KIT P/N 57K3520..... UOC:A11,A13,A14,A20,A24,A25,A26,A27, B17,B18,H11,H13,H14,H17,H18,H20,H21, H24,H25,H26,H27,H28,MMM	1
27	PAOZZ	3030013214482	19207	12339359-18	BELTS,V,MATCHED SET PART OF KIT P/N 57K3520..... UOC:A11,A13,A14,A20,A24,A25,A26,A27, B17,B18,H11,H13,H14,H17,H18,H20,H21, H24,H25,H26,H27,H28,MMM	1
28	PAOZZ	3020012329629	19207	12339392	PULLEY,GROOVE PART OF KIT P/N 57K3520..... UOC:A11,A13,A14,A20,A24,A25,A26,A27, B17,B18,H11,H13,H14,H17,H18,H20,H21, H24,H25,H26,H27,H28,MMM	1
29	PAOZZ	5306011140963	80204	B1821BH038C100L	BOLT,MACHINE..... UOC:A11,A13,A14,A20,A24,A25,A26,A27, B17,B18,H11,H13,H14,H17,H18,H20,H21, H24,H25,H26,H27,H28,MMM	1
30	PAOZZ	5340007022848	96906	MS21333-128	CLAMP,LOOP PART OF KIT P/N 57K3520.. UOC:A11,A13,A14,A20,A24,A25,A26,A27, B17,B18,H11,H13,H14,H17,H18,H20,H21, H24,H25,H26,H27,H28,MMM	2
KIT	PAOZZ	2920014551630	19207	57K3520	PARTS KIT,ENGINE GE 200-AMP DUAL VOLTAGE ALTERNATOR..... UOC:A11,A13,A14,A20,A24,A25,A26,A27, B17,B18,H11,H13,H14,H17,H18,H20,H21, H24,H25,H26,H27,H28,MMM	1
					BAND,MARKER (2) 474-13	
					BELTING,V (1) 475-22	
					BELTS,V,MATCHED SET(1) 475-27	
					BEZEL,AUTOMOTIVE TR(1) 473-3	
					BOLT,MACHINE (1) 473-1	
					BOLT,MACHINE (1) 474-7	
					BOLT,MACHINE (1) 475-21	
					BOLT,MACHINE (1) 475-24	
					BRACKET,DOUBLE ANGL(1) 475-7	
					BRACKET,MOUNTING (1) 475-12	

(1) ITEM NO	(2) SMR CODE	(3) NSN	(4) CAGEC	(5) PART NUMBER	(6) DESCRIPTION AND USABLE ON CODES(UOC)	(7) QTY
					BRACKET,VEHICULAR C(1)	475-19
					CABLE NIPPLE,ELECTR(1)	474-15
					CABLE NIPPLE,ELECTR(2)	475-5
					CLAMP,LOOP (2)	473-4
					CLAMP,LOOP (3)	474-2
					CLAMP,LOOP (2)	475-30
					DUMMY CONNECTOR,PLU(1)	475-1
					GROMMET,NONMETALLIC(1)	473-9
					INSULATION SLEEVING(2)	474-12
					LEAD,ELECTRICAL (1)	474-10
					LEAD,ELECTRICAL (1)	475-4
					LOOM NONMETALLIC (1)	474-14
					NUT,PLAIN,HEXAGON (1)	473-6
					NUT,PLAIN,HEXAGON (2)	474-5
					NUT,PLAIN,HEXAGON (1)	474-9
					NUT,PLAIN,HEXAGON (1)	475-18
					NUT,PLAIN,HEXAGON (3)	475-13
					NUT,SELF-LOCKING,HE(1)	475-9
					PULLEY,GROOVE (1)	475-28
					SCREW,CAP,HEXAGON H(1)	475-6
					SCREW,CAP,HEXAGON H(1)	475-10
					SHELL,ELECTRICAL CO(1)	475-2
					STRAP,TIEDOWN,ELECT(1)	473-7
					STRAP,TIEDOWN,ELECT(2)	474-1
					STRAP,TIEDOWN,ELECT(1)	475-3
					STRIP,ELECTRICAL GR(1)	475-26
					STUD,SHOULDERED (1)	475-15
					STUD,SHOULDERED (1)	475-25
					TERMINAL,LUG (1)	474-11
					TERMINAL,LUG (1)	474-16
					WASHER,FLAT (1)	473-2
					WASHER,FLAT (1)	473-11
					WASHER,FLAT (2)	474-3
					WASHER,FLAT (1)	474-6
					WASHER,FLAT (1)	475-8
					WASHER,FLAT (2)	475-11
					WASHER,FLAT (4)	475-16
					WASHER,LOCK (1)	473-5
					WASHER,LOCK (1)	473-8
					WASHER,LOCK (1)	473-10
					WASHER,LOCK (2)	474-4
					WASHER,LOCK (1)	474-8
					WASHER,LOCK (1)	475-17
					WASHER,LOCK (4)	475-14
					WASHER,LOCK (1)	475-20
					WASHER,LOCK (2)	475-23

END OF FIGURE

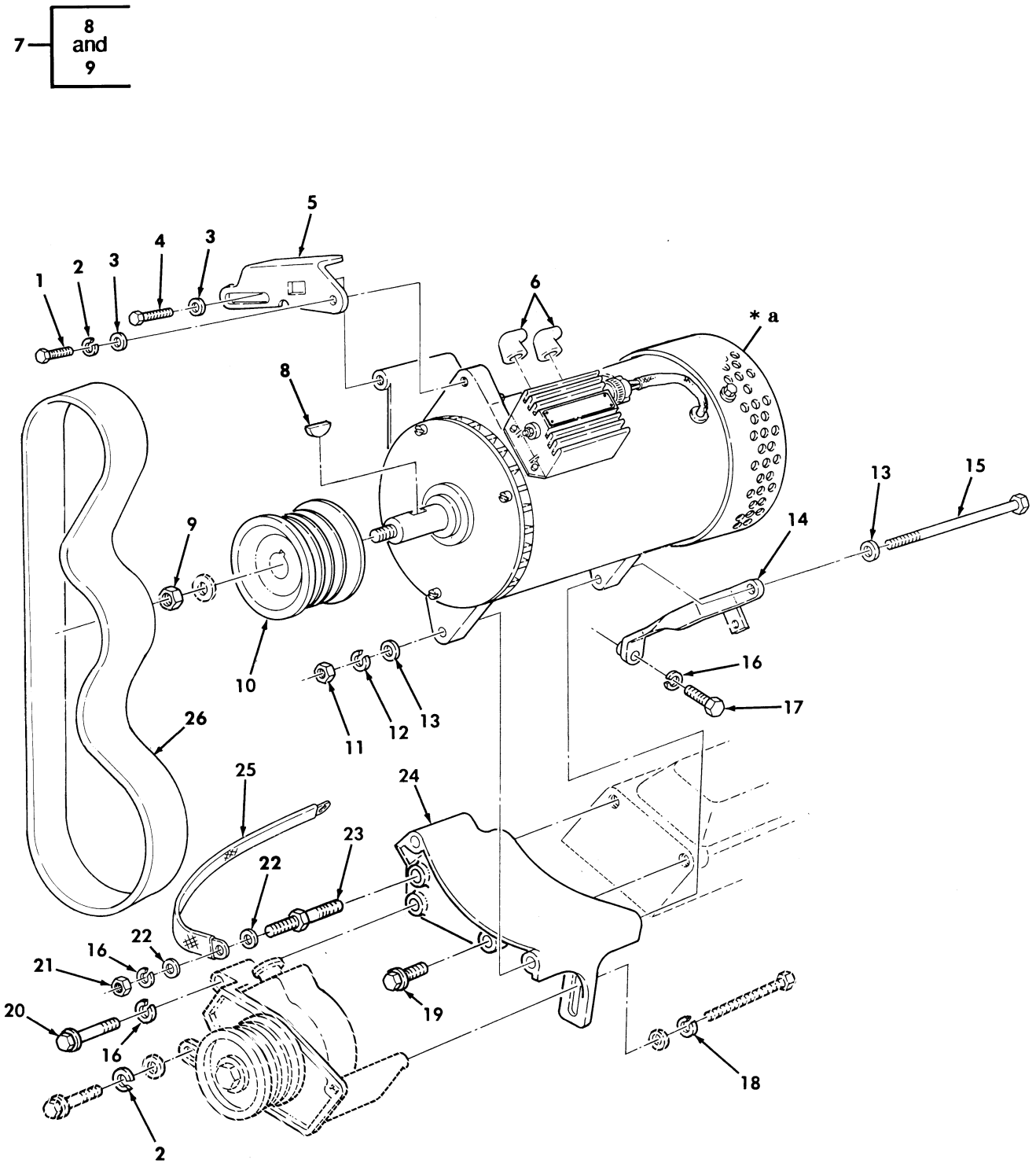

* a PART OF ITEM 7

Figure 476. 400 AMP Alternator Kit.

(1) ITEM NO	(2) SMR CODE	(3) NSN	(4) CAGEC	(5) PART NUMBER	(6) DESCRIPTION AND USABLE ON CODES(UOC)	(7) QTY
					GROUP 3307 SPECIAL PURPOSE KITS	
					FIG. 476 400 AMP ALTERNATOR KIT	
1	PAOZZ	5305000680510	80204	B1821BH038C100N	SCREW,CAP,HEXAGON H 3/8-16X1.00 PART OF KIT P/N 57K0273..... UOC:AVY,A11,A13,A14,A20,A24,A25,A26, A27,B17,B18,HVY,H11,H13,H14,H17,H18, H20,H21,H24,H25,H26,H27,H28,MMM	1
2	PAOZZ	5310006379541	96906	MS35338-46	WASHER,LOCK 3/8 PART OF KIT P/N 57K0273..... UOC:AVY,A11,A13,A14,A20,A24,A25,A26, A27,B17,B18,HVY,H11,H13,H14,H17,H18, H20,H21,H24,H25,H26,H27,H28,MMM	2
3	PAOZZ	5310014124013	24617	2436163	WASHER,FLAT 3/8 PART OF KIT P/N 57K0273..... UOC:AVY,A11,A13,A14,A20,A24,A25,A26, A27,B17,B18,HVY,H11,H13,H14,H17,H18, H20,H21,H24,H25,H26,H27,H28,MMM	2
4	PAOZZ	5306011140963	80204	B1821BH038C100L	BOLT,MACHINE 3/8 PART OF KIT P/N 57K0273..... UOC:AVY,A11,A13,A14,A20,A24,A25,A26, A27,B17,B18,HVY,H11,H13,H14,H17,H18, H20,H21,H24,H25,H26,H27,H28,MMM	1
5	PAOZA	5342014666276	19207	12446758	BRACKET,ENGINE ACCE 3/8 PART OF KIT P/N 57K0273..... UOC:AVY,A11,A13,A14,A20,A24,A25,A26, A27,B17,B18,HVY,H11,H13,H14,H17,H18, H20,H21,H24,H25,H26,H27,H28,MMM	1
6	PAOZZ	5975014695558	77060	0298 4033	CABLE NIPPLE,ELECTR 3/8 PART OF KIT P/N 57K0273..... UOC:AVY,A11,A13,A14,A20,A24,A25,A26, A27,B17,B18,HVY,H11,H13,H14,H17,H18, H20,H21,H24,H25,H26,H27,H28,MMM	2
7	PAOZZ	2920014661855	76761	N1602-1	GENERATOR,ENGINE AC 400 AMP PART OF KIT P/N 57K0273..... UOC:AVY,A11,A13,A14,A20,A24,A25,A26, A27,B17,B18,HVY,H11,H13,H14,H17,H18, H20,H21,H24,H25,H26,H27,H28,MMM	1
8	PAOZZ	5315006165501	80205	MS35756-20	.KEY,WOODRUFF 3/8 PART OF KIT P/N 57K0273..... UOC:AVY,A11,A13,A14,A20,A24,A25,A26, A27,B17,B18,HVY,H11,H13,H14,H17,H18, H20,H21,H24,H25,H26,H27,H28,MMM	1
9	PAOZZ	5310004190876	96906	MS21245-L12	.NUT,SELF-LOCKING,HE 3/4-16X1.00 PART OF KIT P/N 57K0273..... UOC:AVY,A11,A13,A14,A20,A24,A25,A26, A27,B17,B18,HVY,H11,H13,H14,H17,H18, H20,H21,H24,H25,H26,H27,H28,MMM	1
10	PAOZZ	3020014663603	34623	12446753	PULLEY,GROOVE PART OF KIT P/N 57K0273..... UOC:AVY,A11,A13,A14,A20,A24,A25,A26, A27,B17,B18,HVY,H11,H13,H14,H17,H18,	1

(1) ITEM NO	(2) SMR CODE	(3) NSN	(4) CAGEC	(5) PART NUMBER	(6) DESCRIPTION AND USABLE ON CODES(UOC)	(7) QTY
					H20,H21,H24,H25,H26,H27,H28,MMM	
11	PAOZZ	5310007638906	96906	MS51968-18	NUT,PLAIN,HEXAGON PART OF KIT P/N 57K0273..... UOC:AVY,A11,A13,A14,A20,A24,A25,A26, A27,B17,B18,HVY,H11,H13,H14,H17,H18, H20,H21,H24,H25,H26,H27,H28,MMM	1
12	PAOZZ	5310001670680	96906	MS35338-49	WASHER,LOCK PART OF KIT P/N 57K0273. UOC:AVY,A11,A13,A14,A20,A24,A25,A26, A27,B17,B18,HVY,H11,H13,H14,H17,H18, H20,H21,H24,H25,H26,H27,H28,MMM	1
13	PAOZZ	5310006560114	96906	MS15795-819	WASHER,FLAT PART OF KIT P/N 57K0273. UOC:AVY,A11,A13,A14,A20,A24,A25,A26, A27,B17,B18,HVY,H11,H13,H14,H17,H18, H20,H21,H24,H25,H26,H27,H28,MMM	2
14	PAOZA	5342014666280	19207	12460502	BRACKET,ENGINE ACCE PART OF KIT P/N 57K0273..... UOC:AVY,A11,A13,A14,A20,A24,A25,A26, A27,B17,B18,HVY,H11,H13,H14,H17,H18, H20,H21,H24,H25,H26,H27,H28,MMM	1
15	PAOZZ	5305014753014	80204	B1821BH056F950N	BOLT,SHOULDER PART OF KIT P/N 57K0273..... UOC:AVY,A11,A13,A14,A20,A24,A25,A26, A27,B17,B18,HVY,H11,H13,H14,H17,H18, H20,H21,H24,H25,H26,H27,H28,MMM	1
16	PAOZZ	5310012067306	7X677	11500207	WASHER,LOCK M10 PART OF KIT P/N 57K0273..... UOC:AVY,A11,A13,A14,A20,A24,A25,A26, A27,B17,B18,HVY,H11,H13,H14,H17,H18, H20,H21,H24,H25,H26,H27,H28,MMM	3
17	PAOZZ	5305012433759	7X677	14060130	SCREW,CAP,HEXAGON H M10 X 1.5 X 40 PART OF KIT P/N 57K0273..... UOC:AVY,A11,A13,A14,A20,A24,A25,A26, A27,B17,B18,HVY,H11,H13,H14,H17,H18, H20,H21,H24,H25,H26,H27,H28,MMM	1
18	PAOZZ	5310000116121	29510	120384	WASHER,LOCK 1/2 PART OF KIT P/N 57K0273..... UOC:AVY,A11,A13,A14,A20,A24,A25,A26, A27,B17,B18,HVY,H11,H13,H14,H17,H18, H20,H21,H24,H25,H26,H27,H28,MMM	1
19	PAOZZ	5306012638889	19207	12340845-2	BOLT,MACHINE M10-1.50 X 30 PART OF KIT P/N 57K0273..... UOC:AVY,A11,A13,A14,A20,A24,A25,A26, A27,B17,B18,HVY,H11,H13,H14,H17,H18, H20,H21,H24,H25,H26,H27,H28,MMM	1
20	PAOZZ	5306012643531	19207	12340845-4	BOLT,MACHINE M10-1.5 X 100 PART OF KIT P/N 57K0273..... UOC:AVY,A11,A13,A14,A20,A24,A25,A26, A27,B17,B18,HVY,H11,H13,H14,H17,H18, H20,H21,H24,H25,H26,H27,H28,MMM	1
21	PAOZZ	5310013958747	80204	B18241B100F	NUT,PLAIN,HEXAGON PART OF KIT P/N 57K0273..... UOC:AVY,A11,A13,A14,A20,A24,A25,A26, A27,B17,B18,HVY,H11,H13,H14,H17,H18,	1

(1) ITEM NO	(2) SMR CODE	(3) NSN	(4) CAGEC	(5) PART NUMBER	(6) DESCRIPTION AND USABLE ON CODES(UOC)	(7) QTY
					H20,H21,H24,H25,H26,H27,H28,MMM	
22	PAOZZ	5310012101587	7X677	11500256	WASHER,FLAT 10MM PART OF KIT P/N 57K0273..... UOC:AVY,A11,A13,A14,A20,A24,A25,A26, A27,B17,B18,HVY,H11,H13,H14,H17,H18, H20,H21,H24,H25,H26,H27,H28,MMM	2
23	PAOZZ	5307014084029	19207	12342545	STUD,SHOULDERED PART OF KIT P/N 57K0273..... UOC:AVY,A11,A13,A14,A20,A24,A25,A26, A27,B17,B18,HVY,H11,H13,H14,H17,H18, H20,H21,H24,H25,H26,H27,H28,MMM	1
24	PAOZA	5342014666283	19207	12446755	BRACKET,ENGINE ACCE PART OF KIT P/N 57K0273..... UOC:AVY,A11,A13,A14,A20,A24,A25,A26, A27,B17,B18,HVY,H11,H13,H14,H17,H18, H20,H21,H24,H25,H26,H27,H28,MMM	1
25	PAOZZ	5999013725601	19207	12341151	STRIP,ELECTRICAL GR PART OF KIT P/N 57K0273..... UOC:AVY,A11,A13,A14,A20,A24,A25,A26, A27,B17,B18,HVY,H11,H13,H14,H17,H18, H20,H21,H24,H25,H26,H27,H28,MMM	1
26	PAOZA	3030014665387	19207	12339359-28	V-BELT SET 58 INCHES LONG PART OF KIT P/N 57K0273..... UOC:AVY,A11,A13,A14,A20,A24,A25,A26, A27,B17,B18,HVY,H11,H13,H14,H17,H18, H20,H21,H24,H25,H26,H27,H28,MMM	1

END OF FIGURE

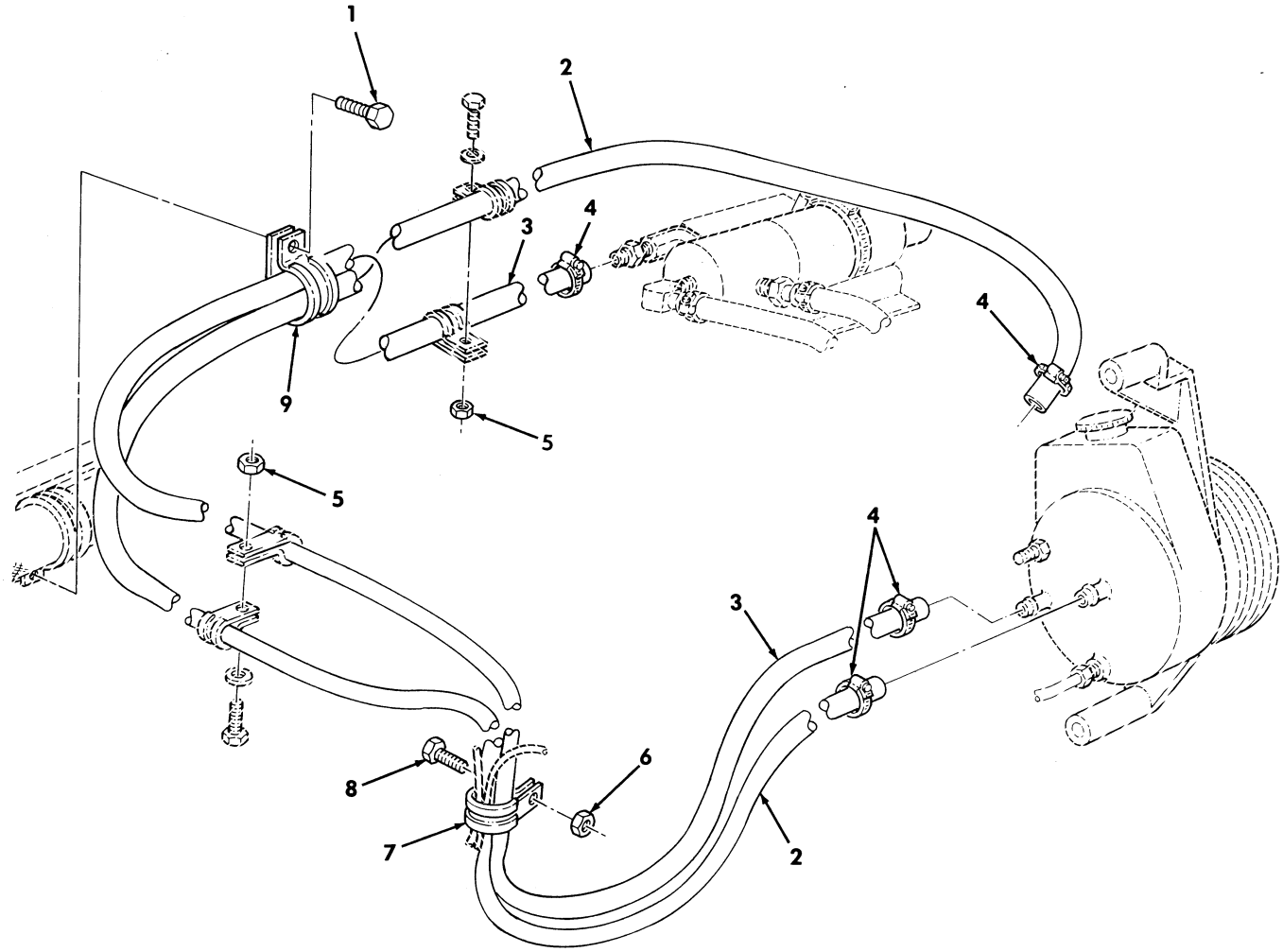

Figure 477. Power Steering Pump Hoses-400 AMP Alternator Kit.

(1) ITEM NO	(2) SMR CODE	(3) NSN	(4) CAGEC	(5) PART NUMBER	(6) DESCRIPTION AND USABLE ON CODES(UOC)	(7) QTY
					GROUP 3307 SPECIAL PURPOSE KITS	
					FIG. 477 POWER STEERING PUMP HOSES-400 AMP ALTERNATOR KIT	
1	PAOZZ	5305012068401	7X677	448655	SCREW,TAPPING PART OF KIT P/N 57K0273..... UOC:AVY,A11,A13,A14,A20,A24,A25,A26, A27,B17,B18,HVY,H11,H13,H14,H17,H18, H20,H21,H24,H25,H26,H27,H28,MMM	1
2	MOOZZ		19207	12338330-9	HOSE,NONMETALLIC MAKE FRON HOSE,P/N 6490610019,51 INCHES LONG PART OF KIT P/N 57K0273..... UOC:AVY,A11,A13,A14,A20,A24,A25,A26, A27,B17,B18,HVY,H11,H13,H14,H17,H18, H20,H21,H24,H25,H26,H27,H28,MMM	1
3	MOOZZ		19207	12338330-8	HOSE,NONMETALLIC MAKE FROM HOSE,P/N 6490610019,37 INCHES LONG PART OF KIT P/N 57K0273..... UOC:AVY,A11,A13,A14,A20,A24,A25,A26, A27,B17,B18,HVY,H11,H13,H14,H17,H18, H20,H21,H24,H25,H26,H27,H28,MMM	1
4	PAOZZ	4730008776298	18876	8486066	CLAMP,HOSE PART OF KIT P/N 57K0273.. UOC:AVY,A11,A13,A14,A20,A24,A25,A26, A27,B17,B18,HVY,H11,H13,H14,H17,H18, H20,H21,H24,H25,H26,H27,H28,MMM	4
5	PAOZZ	5310000614650	96906	MS51943-31	NUT,SELF-LOCKING,HE 1/4-20 PART OF KIT P/N 57K0273..... UOC:AVY,A11,A13,A14,A20,A24,A25,A26, A27,B17,B18,HVY,H11,H13,H14,H17,H18, H20,H21,H24,H25,H26,H27,H28,MMM	2
6	PAOZZ	5310001249265	72582	271169	NUT,PLAIN,ASSEMBLED #10-32 PART OF KIT P/N 57K0273..... UOC:AVY,A11,A13,A14,A20,A24,A25,A26, A27,B17,B18,HVY,H11,H13,H14,H17,H18, H20,H21,H24,H25,H26,H27,H28,MMM	1
7	PAOZZ	5340009291794	96906	MS21334-31	CLAMP,LOOP PART OF KIT P/N 57K0273.. UOC:AVY,A11,A13,A14,A20,A24,A25,A26, A27,B17,B18,HVY,H11,H13,H14,H17,H18, H20,H21,H24,H25,H26,H27,H28,MMM	1
8	PAOZZ	5305011432328	72582	454065	SCREW,CAP,HEXAGON H #10-32X3/4 PART OF KIT P/N 57K0273..... UOC:AVY,A11,A13,A14,A20,A24,A25,A26, A27,B17,B18,HVY,H11,H13,H14,H17,H18, H20,H21,H24,H25,H26,H27,H28,MMM	1
9	PAOZZ	5340004381836	19207	7397780	CLAMP,LOOP PART OF KIT P/N 57K0273.. UOC:AVY,A11,A13,A14,A20,A24,A25,A26, A27,B17,B18,HVY,H11,H13,H14,H17,H18, H20,H21,H24,H25,H26,H27,H28,MMM	1

END OF FIGURE

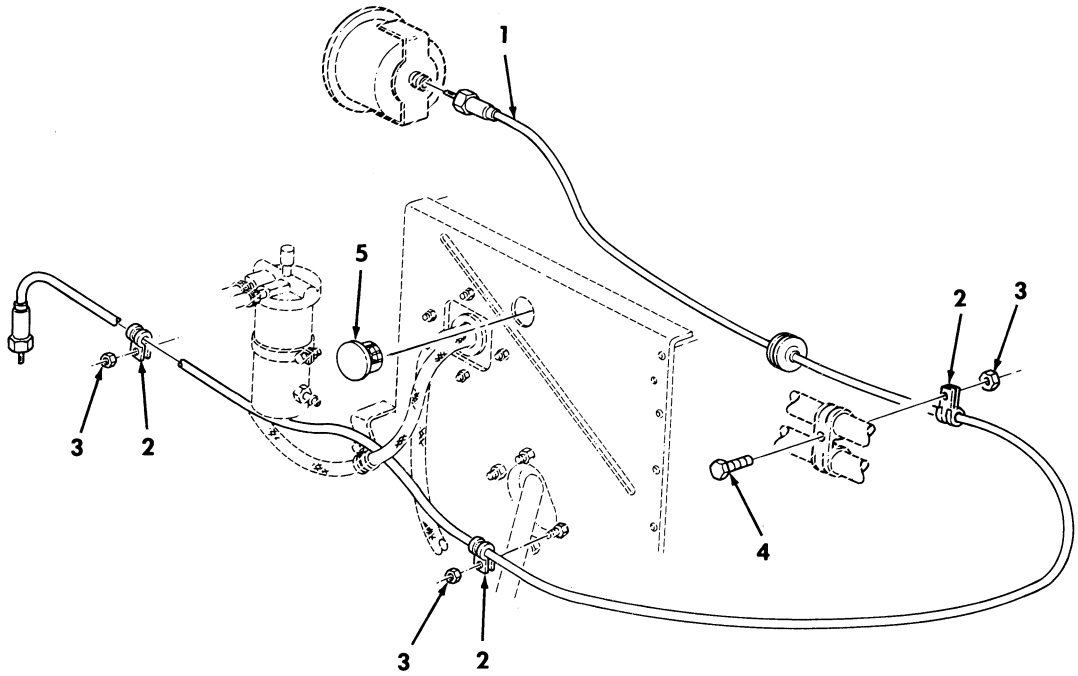

Figure 478. Speedometer Cable Assembly-400 AMP Alternator Kit.

(1) ITEM NO	(2) SMR CODE	(3) NSN	(4) CAGEC	(5) PART NUMBER	(6) DESCRIPTION AND USABLE ON CODES(UOC)	(7) QTY
					GROUP 3307 SPECIAL PURPOSE KITS	
					FIG. 478 SPEEDOMETER CABLE ASSEMBLY-400 AMP ALTERNATOR KIT	
1	PAOZZ	6680014429413	19200	12338428-2	SHAFT ASSEMBLY,FLEX PART OF KIT P/N 57K0273..... UOC:AVY,A11,A13,A14,A20,A24,A25,A26, A27,B17,B18,HVY,H11,H13,H14,H17,H18, H20,H21,H24,H25,H26,H27,H28,MMM	1
2	PAOZZ	5340008091492	81348	CMDX2-3PT573036	CLAMP,LOOP PART OF KIT P/N 57K0273.. UOC:AVY,A11,A13,A14,A20,A24,A25,A26, A27,B17,B18,HVY,H11,H13,H14,H17,H18, H20,H21,H24,H25,H26,H27,H28,MMM	3
3	PAOZZ	5310000614650	96906	MS51943-31	NUT,SELF-LOCKING,HE 1/4-20 PART OF KIT P/N 57K0273..... UOC:AVY,A11,A13,A14,A20,A24,A25,A26, A27,B17,B18,HVY,H11,H13,H14,H17,H18, H20,H21,H24,H25,H26,H27,H28,MMM	3
4	PAOZZ	5305000680508	80204	B1821BH025C075N	SCREW,CAP,HEXAGON H 1/4-20 X 3/4 PART OF KIT P/N 57K0273..... UOC:AVY,A11,A13,A14,A20,A24,A25,A26, A27,B17,B18,HVY,H11,H13,H14,H17,H18, H20,H21,H24,H25,H26,H27,H28,MMM	1
5	PAOZZ	5340011104036	19207	12298661	PLUG,VENT PART OF KIT P/N 57K0273... UOC:AVY,A11,A13,A14,A20,A24,A25,A26, A27,B17,B18,HVY,H11,H13,H14,H17,H18, H20,H21,H24,H25,H26,H27,H28,MMM	1

END OF FIGURE

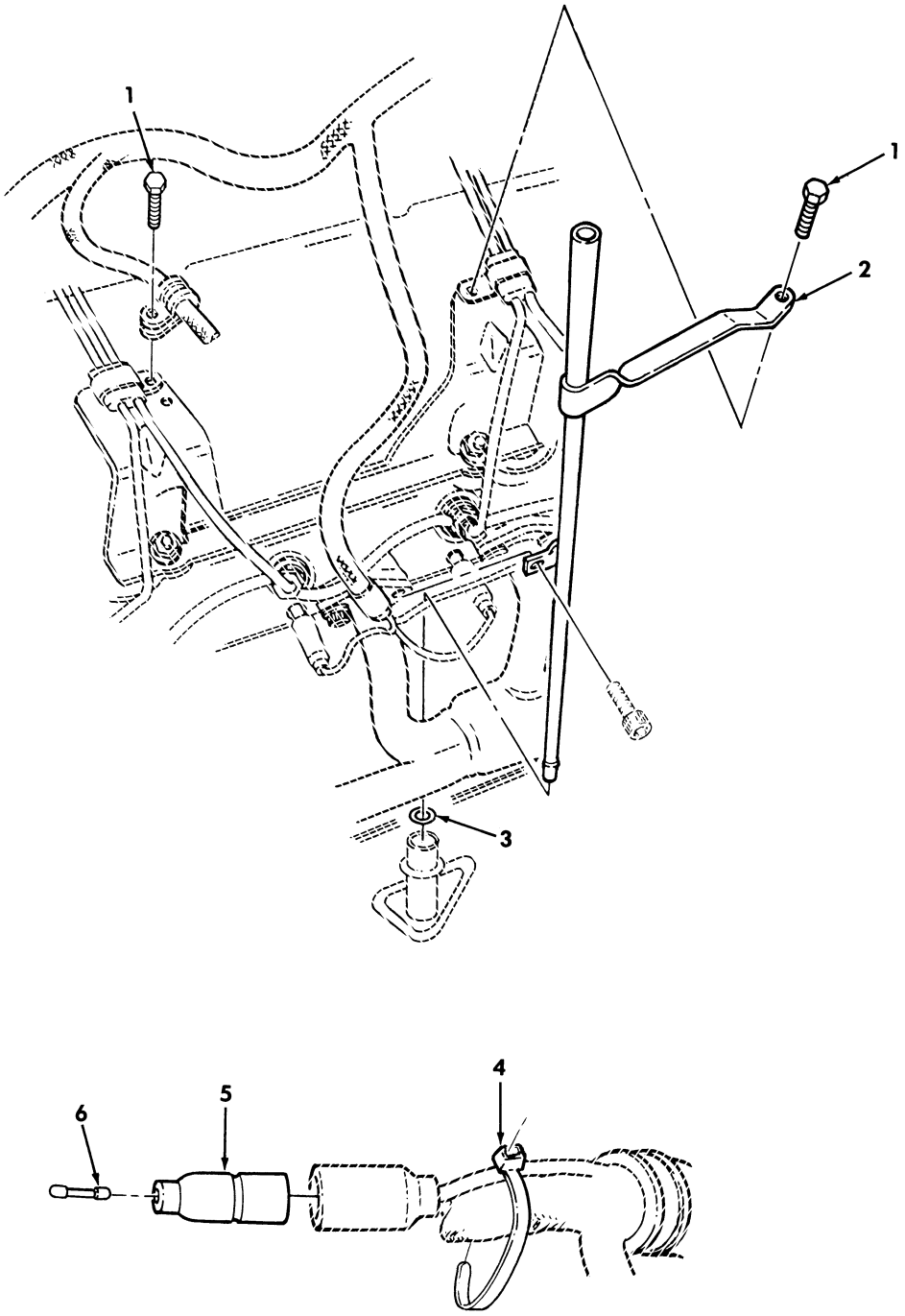

Figure 479. Dipstick and Dummy Connector Plug-400 AMP Alternator Kit.

(1) ITEM NO	(2) SMR CODE	(3) NSN	(4) CAGEC	(5) PART NUMBER	(6) DESCRIPTION AND USABLE ON CODES(UOC)	(7) QTY
					GROUP 3307 SPECIAL PURPOSE KITS	
					FIG. 479 DIPSTICK AND DUMMY CONNECTOR PLUG-400 AMP ALTERNATOR KIT	
1	PAOZZ	5305012155174	19207	12340515	SCREW,ASSEMBLED WAS PART OF KIT P/N 57K0273..... UOC:AVY,A11,A13,A14,A20,A24,A25,A26, A27,B17,B18,HVY,H11,H13,H14,H17,H18, H20,H21,H24,H25,H26,H27,H28,MMM	2
2	PAOZZ	2590014665447	34623	12446754	TUBE,DIPSTICK PART OF KIT P/N 57K0273..... UOC:AVY,A11,A13,A14,A20,A24,A25,A26, A27,B17,B18,HVY,H11,H13,H14,H17,H18, H20,H21,H24,H25,H26,H27,H28,MMM	1
3	PAOZZ	5331009359136	24617	274244	O-RING .355"I.D PART OF KIT P/N 57K0273..... UOC:AVY,A11,A13,A14,A20,A24,A25,A26, A27,B17,B18,HVY,H11,H13,H14,H17,H18, H20,H21,H24,H25,H26,H27,H28,MMM	1
4	PAOZZ	5975010345871	96906	MS3367-7-0	STRAP,TIEDOWN,ELECT PART OF KIT P/N 57K0273..... UOC:AVY,A11,A13,A14,A20,A24,A25,A26, A27,B17,B18,HVY,H11,H13,H14,H17,H18, H20,H21,H24,H25,H26,H27,H28,MMM	1
5	PAOZZ	5935008338561	19207	8338561	SHELL,ELECTRICAL CO PART OF KIT P/N 57K0273..... UOC:AVY,A11,A13,A14,A20,A24,A25,A26, A27,B17,B18,HVY,H11,H13,H14,H17,H18, H20,H21,H24,H25,H26,H27,H28,MMM	1
6	PAOZZ	5935002140904	19207	7982907	DUMMY CONNECTOR,PLU PART OF KIT P/N 57K0273..... UOC:AVY,A11,A13,A14,A20,A24,A25,A26, A27,B17,B18,HVY,H11,H13,H14,H17,H18, H20,H21,H24,H25,H26,H27,H28,MMM	1

END OF FIGURE

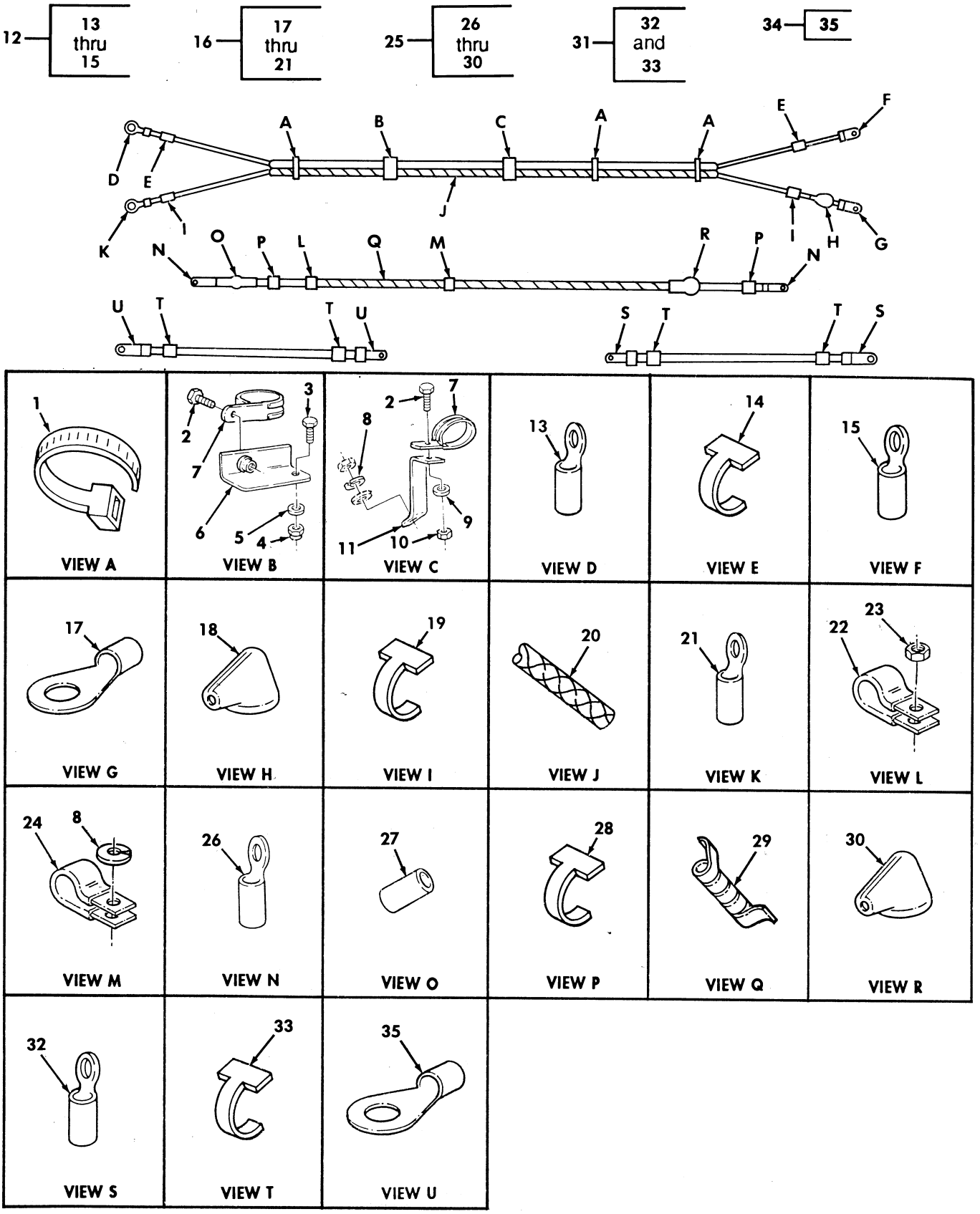

Figure 480. 400 AMP Alternator Wiring Harness Cable Assemblies.

(1) ITEM NO	(2) SMR CODE	(3) NSN	(4) CAGEC	(5) PART NUMBER	(6) DESCRIPTION AND USABLE ON CODES(UOC)	(7) QTY
					GROUP 3307 SPECIAL PURPOSE KITS	
					FIG. 480 400 AMP ALTERNATOR WIRING HARNESS CABLE ASSEMBLIES	
1	PAOZZ	5975010345871	96906	MS3367-7-0	STRAP,TIEDOWN,ELECT PART OF KIT P/N 57K0273..... UOC:AVY,A11,A13,A14,A20,A24,A25,A26, A27,B17,B18,HVY,H11,H13,H14,H17,H18, H20,H21,H24,H25,H26,H27,H28,MMM	3
2	PAOZZ	5305011432328	72582	454065	SCREW,CAP,HEXAGON H #10-32 X 3/4 PART OF KIT P/N 57K0273..... UOC:AVY,A11,A13,A14,A20,A24,A25,A26, A27,B17,B18,HVY,H11,H13,H14,H17,H18, H20,H21,H24,H25,H26,H27,H28,MMM	2
3	PAOZZ	5306002264825	80204	B1821BH031C075N	BOLT,MACHINE 1/4-20 X 3/4 PART OF KIT P/N 57K0273..... UOC:AVY,A11,A13,A14,A20,A24,A25,A26, A27,B17,B18,HVY,H11,H13,H14,H17,H18, H20,H21,H24,H25,H26,H27,H28,MMM	1
4	PAOZZ	5310008140673	96906	MS51943-33	NUT,SELF-LOCKING,HE 5/16-18 PART OF KIT P/N 57K0273..... UOC:AVY,A11,A13,A14,A20,A24,A25,A26, A27,B17,B18,HVY,H11,H13,H14,H17,H18, H20,H21,H24,H25,H26,H27,H28,MMM	1
5	PAOZZ	5310000814219	96906	MS27183-12	WASHER,FLAT 5/16 PART OF KIT P/N 57K0273..... UOC:AVY,A11,A13,A14,A20,A24,A25,A26, A27,B17,B18,HVY,H11,H13,H14,H17,H18, H20,H21,H24,H25,H26,H27,H28,MMM	1
6	PAOZA	5340014662468	19207	12460496	BRACKET,ANGLE PART OF KIT P/N 57K0273..... UOC:AVY,A11,A13,A14,A20,A24,A25,A26, A27,B17,B18,HVY,H11,H13,H14,H17,H18, H20,H21,H24,H25,H26,H27,H28,MMM	1
7	PAOZZ	5340007319611	96906	MS21334-34	CLAMP,LOOP PART OF KIT P/N 57K0273.. UOC:AVY,A11,A13,A14,A20,A24,A25,A26, A27,B17,B18,HVY,H11,H13,H14,H17,H18, H20,H21,H24,H25,H26,H27,H28,MMM	2
8	PAOZZ	5310012067306	7X677	11500207	WASHER,LOCK PART OF KIT P/N 57K0273. UOC:AVY,A11,A13,A14,A20,A24,A25,A26, A27,B17,B18,HVY,H11,H13,H14,H17,H18, H20,H21,H24,H25,H26,H27,H28,MMM	2
9	PAOZZ	5310000145850	96906	MS27183-42	WASHER,FLAT #10 PART OF KIT P/N 57K0273..... UOC:AVY,A11,A13,A14,A20,A24,A25,A26, A27,B17,B18,HVY,H11,H13,H14,H17,H18, H20,H21,H24,H25,H26,H27,H28,MMM	1
10	PAOZZ	5310002089255	96906	MS21044-C3	NUT,SELF-LOCKING,HE PART OF KIT P/N 57K0273..... UOC:AVY,A11,A13,A14,A20,A24,A25,A26, A27,B17,B18,HVY,H11,H13,H14,H17,H18, H20,H21,H24,H25,H26,H27,H28,MMM	1

(1) ITEM NO	(2) SMR CODE	(3) NSN	(4) CAGEC	(5) PART NUMBER	(6) DESCRIPTION AND USABLE ON CODES(UOC)	(7) QTY
11	PAOZA	5340014662620	19207	12460495	BRACKET,DOUBLE ANGL PART OF KIT P/N 57K0273..... UOC:AVY,A11,A13,A14,A20,A24,A25,A26, A27,B17,B18,HVY,H11,H13,H14,H17,H18, H20,H21,H24,H25,H26,H27,H28,MMM	1
12	PAOZZ	6150014707014	19207	12460498-4	CABLE ASSEMBLY,SPEC PART OF KIT P/N 57K0273..... UOC:AVY,A11,A13,A14,A20,A24,A25,A26, A27,B17,B18,HVY,H11,H13,H14,H17,H18, H20,H21,H24,H25,H26,H27,H28,MMM	1
13	PAOZZ	5940001155023	96906	MS20659-124	.TERMINAL,LUG PART OF KIT P/N 57K0273..... UOC:AVY,A11,A13,A14,A20,A24,A25,A26, A27,B17,B18,HVY,H11,H13,H14,H17,H18, H20,H21,H24,H25,H26,H27,H28,MMM	1
14	PAOZZ	9905009457637	81349	M43436/1-4	.BAND,MARKER PART OF KIT P/N 57K0273 UOC:AVY,A11,A13,A14,A20,A24,A25,A26, A27,B17,B18,HVY,H11,H13,H14,H17,H18, H20,H21,H24,H25,H26,H27,H28,MMM	2
15	PAOZA	5940001155012	96906	MS20659-157	.TERMINAL,LUG PART OF KIT P/N 57K0273..... UOC:AVY,A11,A13,A14,A20,A24,A25,A26, A27,B17,B18,HVY,H11,H13,H14,H17,H18, H20,H21,H24,H25,H26,H27,H28,MMM	1
16	MOOZZ		19207	12460498-3	CABLE ASSEMBLY PART OF KIT P/N 57K0273 MAKE FROM WIRE,P/N M13486/1-4,78,INCHES LONG..... A27,B17,B18,HVY,H11,H13,H14,H17,H18, A27,B17,B18,HVY,H11,H13,H14,H17,H18, H20,H21,H24,H25,H26,H27,H28,MMM	1
17	PAOZZ	5940001155006	96906	MS25036-133	.TERMINAL,LUG PART OF KIT P/N 57K0273..... UOC:AVY,A11,A13,A14,A20,A24,A25,A26, A27,B17,B18,HVY,H11,H13,H14,H17,H18, H20,H21,H24,H25,H26,H27,H28,MMM	1
18	PAOZZ	5975012089618	9Z043	12339710	.CABLE NIPPLE,ELECTR PART OF KIT P/N 57K0273..... UOC:AVY,A11,A13,A14,A20,A24,A25,A26, A27,B17,B18,HVY,H11,H13,H14,H17,H18, H20,H21,H24,H25,H26,H27,H28,MMM	1
19	PAOZZ	9905008933570	81349	M43436/1-3	.BAND,MARKER PART OF KIT P/N 57K0273 UOC:AVY,A11,A13,A14,A20,A24,A25,A26, A27,B17,B18,HVY,H11,H13,H14,H17,H18, H20,H21,H24,H25,H26,H27,H28,MMM	2
20	MOOZZ		9D117	SAEJ562	.LOOM,NONMETALLIC 3/4 PART OF KIT P/N 57K0273 MAKE FROM TUBING,P/N AE208-10,LENGTH AS REQUIRED..... UOC:AVY,A11,A13,A14,A20,A24,A25,A26, A27,B17,B18,HVY,H11,H13,H14,H17,H18, H20,H21,H24,H25,H26,H27,H28,MMM	1
21	PAOZZ	5940001155001	96906	MS20659-135	.TERMINAL,LUG PART OF KIT P/N 57K0273..... UOC:AVY,A11,A13,A14,A20,A24,A25,A26,	1

(1) ITEM NO	(2) SMR CODE	(3) NSN	(4) CAGEC	(5) PART NUMBER	(6) DESCRIPTION AND USABLE ON CODES(UOC)	(7) QTY
					A27,B17,B18,HVY,H11,H13,H14,H17,H18, H20,H21,H24,H25,H26,H27,H28,MMM	
22	PAOZZ	5340008091494	96906	MS21333-105	CLAMP,LOOP PART OF KIT P/N 57K0273.. UOC:AVY,A11,A13,A14,A20,A24,A25,A26, A27,B17,B18,HVY,H11,H13,H14,H17,H18, H20,H21,H24,H25,H26,H27,H28,MMM	1
23	PAOZZ	5310011520598	24617	271172	NUT,SELF-LOCKING,AS 1/4-20 PART OF KIT P/N 57K0273..... UOC:AVY,A11,A13,A14,A20,A24,A25,A26, A27,B17,B18,HVY,H11,H13,H14,H17,H18, H20,H21,H24,H25,H26,H27,H28,MMM	1
24	PAOZZ	5340000538994	96906	MS21333-126	CLAMP,LOOP PART OF KIT P/N 57K0273.. UOC:AVY,A11,A13,A14,A20,A24,A25,A26, A27,B17,B18,HVY,H11,H13,H14,H17,H18, H20,H21,H24,H25,H26,H27,H28,MMM	1
25	MOOZZ		19207	12339317	LEAD,ELECTRICAL PART OF KIT P/N 57K0273 MAKE FROM WIRE,P/N M13486/1-14, 58 INCHES LONG..... UOC:AVY,A11,A13,A14,A20,A24,A25,A26, A27,B17,B18,HVY,H11,H13,H14,H17,H18, H20,H21,H24,H25,H26,H27,H28,MMM	1
26	PAOZZ	5940007355520	56501	TG33	.TERMINAL,LUG PART OF KIT P/N 57K0273..... UOC:AVY,A11,A13,A14,A20,A24,A25,A26, A27,B17,B18,HVY,H11,H13,H14,H17,H18, H20,H21,H24,H25,H26,H27,H28,MMM	2
27	PAOZZ	5970002215301	19207	7056640	.INSULATOR PART OF KIT P/N 57K0273.. UOC:AVY,A11,A13,A14,A20,A24,A25,A26, A27,B17,B18,HVY,H11,H13,H14,H17,H18, H20,H21,H24,H25,H26,H27,H28,MMM	1
28	PAOZZ	9905008933570	81349	M43436/1-3	.BAND,MARKER PART OF KIT P/N 57K0273 UOC:AVY,A11,A13,A14,A20,A24,A25,A26, A27,B17,B18,HVY,H11,H13,H14,H17,H18, H20,H21,H24,H25,H26,H27,H28,MMM	2
29	MOOZZ		19207	12339317-1-AR	.WRAP,NYLON MAKE FROM WRAP,P/N 12339317-1,LENGTH TO SUIT PART OF KIT P/N 57K0273..... UOC:AVY,A11,A13,A14,A20,A24,A25,A26, A27,B17,B18,HVY,H11,H13,H14,H17,H18, H20,H21,H24,H25,H26,H27,H28,MMM	1
30	PAOZZ	5975012089618	9Z043	12339710	.CABLE NIPPLE,ELECTR PART OF KIT P/N 57K0273..... UOC:AVY,A11,A13,A14,A20,A24,A25,A26, A27,B17,B18,HVY,H11,H13,H14,H17,H18, H20,H21,H24,H25,H26,H27,H28,MMM	1
31	MOOZZ		19207	12460498-2	CABLE ASSEMBLY,SPEC PART OF KIT P/N 57K0273 MAKE FROM WIRE,P/N M13486/1-14,11 INCHES LONG..... UOC:AVY,A11,A13,A14,A20,A24,A25,A26, A27,B17,B18,HVY,H11,H13,H14,H17,H18, H20,H21,H24,H25,H26,H27,H28,MMM	1
32	PAOZZ	5940001152683	96906	MS20659-151	.TERMINAL,LUG PART OF KIT P/N 57K0273.....	2

(1) ITEM NO	(2) SMR CODE	(3) NSN	(4) CAGEC	(5) PART NUMBER	(6) DESCRIPTION AND USABLE ON CODES(UOC)	(7) QTY
					UOC:AVY,A11,A13,A14,A20,A24,A25,A26, A27,B17,B18,HVY,H11,H13,H14,H17,H18, H20,H21,H24,H25,H26,H27,H28,MMM	
33	PAOZZ	9905008933570	81349	M43436/1-3	.BAND,MARKER PART OF KIT P/N 57K0273	4
					UOC:AVY,A11,A13,A14,A20,A24,A25,A26, A27,B17,B18,HVY,H11,H13,H14,H17,H18, H20,H21,H24,H25,H26,H27,H28,MMM	
34	MOOZZ		19207	12460498-1	CABLE ASSEMBLY,SPEC PART OF KIT P/N 57K0273 MAKE FROM WIRE,P/N M13486/1-14 11 INCHES LONG.....	1
					UOC:AVY,A11,A13,A14,A20,A24,A25,A26, A27,B17,B18,HVY,H11,H13,H14,H17,H18, H20,H21,H24,H25,H26,H27,H28,MMM	
35	PAOZZ	5940001152684	96906	MS20659-118	.TERMINAL,LUG PART OF KIT P/N 57K0273.....	2
					UOC:AVY,A11,A13,A14,A20,A24,A25,A26, A27,B17,B18,HVY,H11,H13,H14,H17,H18, H20,H21,H24,H25,H26,H27,H28,MMM	

END OF FIGURE

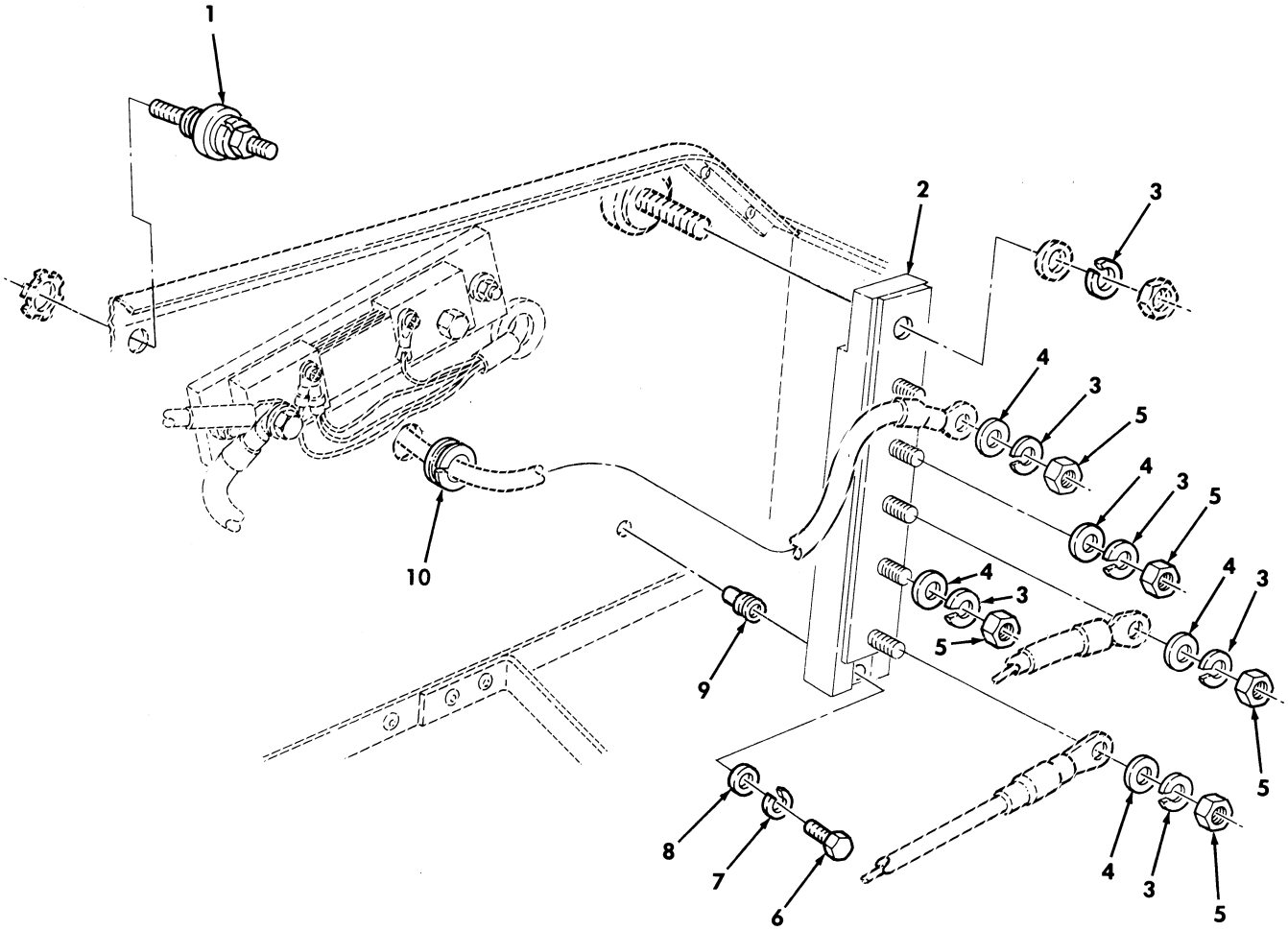

Figure 481. Buss Assembly-400 AMP Alternator Kit.

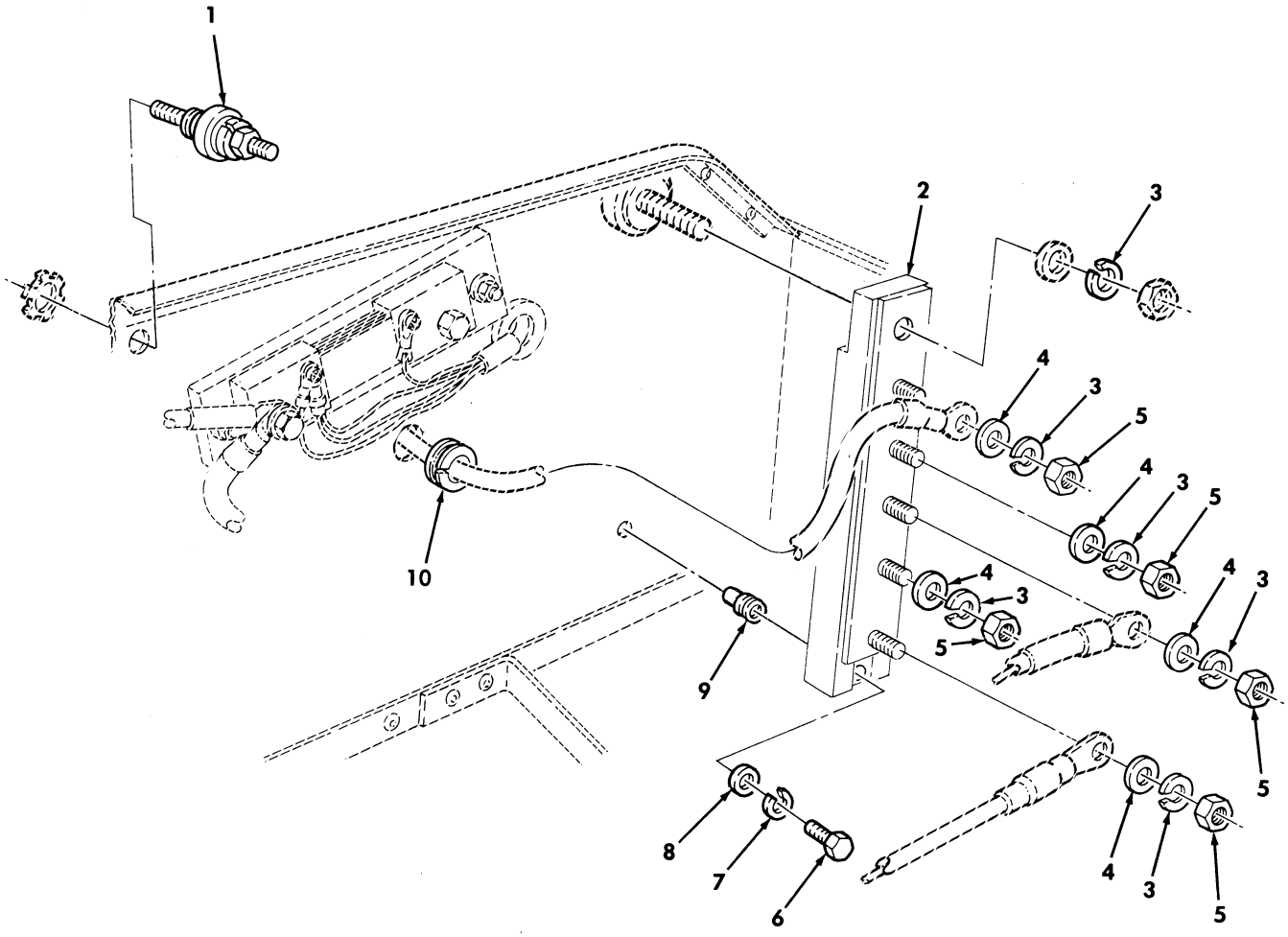

Figure 481. Buss Assembly-400 AMP Alternator Kit.

(1) ITEM NO	(2) SMR CODE	(3) NSN	(4) CAGEC	(5) PART NUMBER	(6) DESCRIPTION AND USABLE ON CODES(UOC)	(7) QTY
					GROUP 3307 SPECIAL PURPOSE KITS	
					FIG. 481 BUSS ASSEMBLY-400 AMP ALTERNATOR KIT	
1	PAOZZ	5940011803655	19207	12340594	TERMINAL ASSEMBLY PART OF KIT P/N 57K0273..... UOC:AVY,A11,A13,A14,A20,A24,A25,A26, A27,B17,B18,HVY,H11,H13,H14,H17,H18, H20,H21,H24,H25,H26,H27,H28,MMM	1
2	PAOZZ	6150014137946	19207	12460070	BUSS,CONDUCTOR PART OF KIT P/N 57K0273..... UOC:AVY,A11,A13,A14,A20,A24,A25,A26, A27,B17,B18,HVY,H11,H13,H14,H17,H18, H20,H21,H24,H25,H26,H27,H28,MMM	1
3	PAOZZ	5310000116121	29510	120384	WASHER,LOCK PART OF KIT P/N 57K0273 UOC:AVY,A11,A13,A14,A20,A24,A25,A26, A27,B17,B18,HVY,H11,H13,H14,H17,H18, H20,H21,H24,H25,H26,H27,H28,MMM	6
4	PAOZZ	5310000455218	96906	MS15795-918	WASHER,FLAT PART OF KIT P/N 57K0273. UOC:AVY,A11,A13,A14,A20,A24,A25,A26, A27,B17,B18,HVY,H11,H13,H14,H17,H18, H20,H21,H24,H25,H26,H27,H28,MMM	5
5	PAOZZ	5310000115774	24617	115774	NUT,PLAIN,HEXAGON PART OF KIT P/N 57K0273..... UOC:AVY,A11,A13,A14,A20,A24,A25,A26, A27,B17,B18,HVY,H11,H13,H14,H17,H18, H20,H21,H24,H25,H26,H27,H28,MMM	5
6	PAOZZ	5305000680508	80204	B1821BH025C075N	SCREW,CAP,HEXAGON H PART OF KIT P/N 57K0273..... UOC:AVY,A11,A13,A14,A20,A24,A25,A26, A27,B17,B18,HVY,H11,H13,H14,H17,H18, H20,H21,H24,H25,H26,H27,H28,MMM	1
7	PAOZZ	5310002092946	24617	120380	WASHER,LOCK 1/4 PART OF KIT P/N 57K0273..... UOC:AVY,A11,A13,A14,A20,A24,A25,A26, A27,B17,B18,HVY,H11,H13,H14,H17,H18, H20,H21,H24,H25,H26,H27,H28,MMM	1
8	PAOZZ	5310001870146	24617	120392	WASHER,FLAT PART OF KIT P/N 57K0273 UOC:AVY,A11,A13,A14,A20,A24,A25,A26, A27,B17,B18,HVY,H11,H13,H14,H17,H18, H20,H21,H24,H25,H26,H27,H28,MMM	1
9	PAOZZ	5310014113422	19207	12446871-2	NUT,PLAIN,BLIND RIV PART OF KIT P/N 57K0273..... UOC:AVY,A11,A13,A14,A20,A24,A25,A26, A27,B17,B18,HVY,H11,H13,H14,H17,H18, H20,H21,H24,H25,H26,H27,H28,MMM	1
10	PAOZZ	5325002766343	96906	MS35489-23	GROMMET,NONMETALLIC PART OF KIT P/N 57K0273..... UOC:AVY,A11,A13,A14,A20,A24,A25,A26, A27,B17,B18,HVY,H11,H13,H14,H17,H18, H20,H21,H24,H25,H26,H27,H28,MMM	1
KIT	PAOZZ	2920014651096	19207	57K0273	400 AMP ALTERNATOR.....	1

(1) ITEM NO	(2) SMR CODE	(3) NSN	(4) CAGEC	(5) PART NUMBER	(6) DESCRIPTION AND USABLE ON CODES(UOC)	(7) QTY
					UOC:AVY,A11,A13,A14,A20,A24,A25,A26, A27,B17,B18,HVY,H11,H13,H14,H17,H18, H20,H21,H24,H25,H26,H27,H28,MMM	
					BAND,MARKER	(2)
					BAND,MARKER	(2)
					BAND,MARKER	(2)
					BAND,MARKER	(4)
					BOLT,MACHINE	(1)
					BOLT,MACHINE	(1)
					BOLT,MACHINE	(1)
					BOLT,MACHINE	(1)
					BOLT,SHOULDER	(1)
					BRACKET ADJUSTMENT	(1)
					BRACKET ASSEMBLY	(1)
					BRACKET,CLAMP	(1)
					BRACKET,ENGINE,ACCE	(1)
					BRACKET,LOWER MOUNT	(1)
					BUSS,CONDUCTOR	(1)
					CABLE ASSEMBLY	(1)
					CABLE ASSEMBLY	(1)
					CABLE ASSEMBLY	(1)
					CABLE,NIPPLE,ELECTR	(2)
					CABLE NIPPLE,ELECTR	(1)
					CABLE NIPPLE,ELECTR	(1)
					CABLE,ASSEMBLY	(1)
					CLAMP,HOSE	(4)
					CLAMP,LOOP	(1)
					CLAMP,LOOP	(1)
					CLAMP,LOOP	(3)
					CLAMP,LOOP	(2)
					CLAMP,LOOP	(1)
					CLAMP,LOOP	(1)
					DUMMY CONNECTOR,PLU	(1)
					GENERATOR,ENGINE	(1)
					GROMMET,NONMETALLIC	(1)
					HOSE,NONMETALLIC	(1)
					HOSE,NONMETALLIC	(1)
					INSULATOR	(1)
					KEY,WOODRUFF	(1)
					LEAD,ELECTRICAL	(1)
					LOOM,NONMETALLIC	(1)
					NUT,BRASS	(5)
					NUT,PLAIN,HEXAGON	(1)
					NUT,PLAIN,HEXAGON	(1)
					NUT,PLAIN,ASSEMBLED	(1)
					NUT,PLAIN,BLIND RIV	(1)
					NUT,SELF-LOCKING,HE	(1)
					NUT,SELF-LOCKING,HE	(2)
					NUT,SELF-LOCKING,HE	(3)
					NUT,SELF-LOCKING,HE	(1)
					NUT,SELF-LOCKING,HE	(1)
					NUT,SELF-LOCKING,AS	(1)
					O-RING	(1)

(1) ITEM NO	(2) SMR CODE	(3) NSN	(4) CAGEC	(5) PART NUMBER	(6) DESCRIPTION AND USABLE ON CODES(UOC)	(7) QTY
					PLUG,VENT (1) 478-5	
					PULLEY (1) 476-10	
					SCREW,ASSEMBLED WAS(2) 479-1	
					SCREW,CAP,HEXAGON H(1) 476-1	
					SCREW,CAP,HEXAGON H(1) 476-17	
					SCREW,CAP,HEXAGON H(1) 477-8	
					SCREW,CAP,HEXAGON H(1) 478-4	
					SCREW,CAP,HEXAGON H(1) 481-6	
					SCREW,CAP,HEXAGON H(2) 480-2	
					SCREW,TAPPING (1) 477-1	
					SHAFT ASSEMBLY,FLEX(1) 478-1	
					SHELL,ELECTRICAL CO(1) 479-5	
					STRAP,TIEDOWN,ELECT(1) 479-4	
					STRAP,TIEDOWN,ELECT(3) 480-1	
					STRIP,ELECTRICAL GR(1) 476-25	
					STUD,SHOULDERED (1) 476-23	
					TERMINAL ASSEMBLY (1) 481-1	
					TERMINAL,LUG (1) 480-13	
					TERMINAL LUG (1) 480-15	
					TERMINAL,LUG (1) 480-17	
					TERMINAL,LUG (1) 480-21	
					TERMINAL,LUG (2) 480-26	
					TERMINAL,LUG (2) 480-32	
					TERMINAL,LUG (2) 480-35	
					TUBE,DIPSTICK (1) 479-2	
					V-BELT SET (1) 476-26	
					WASHER,FLAT (2) 476-3	
					WASHER,FLAT (2) 476-13	
					WASHER,FLAT (2) 476-22	
					WASHER,FLAT (5) 481-4	
					WASHER,FLAT (1) 481-8	
					WASHER,FLAT (1) 480-5	
					WASHER,FLAT (1) 480-9	
					WASHER,LOCK (2) 476-2	
					WASHER,LOCK (1) 476-12	
					WASHER,LOCK (3) 476-16	
					WASHER,LOCK (1) 476-18	
					WASHER,LOCK (6) 481-3	
					WASHER,LOCK (1) 481-7	
					WASHER,LOCK (2) 480-8	
					WRAP,NYLON (1) 480-29	

END OF FIGURE

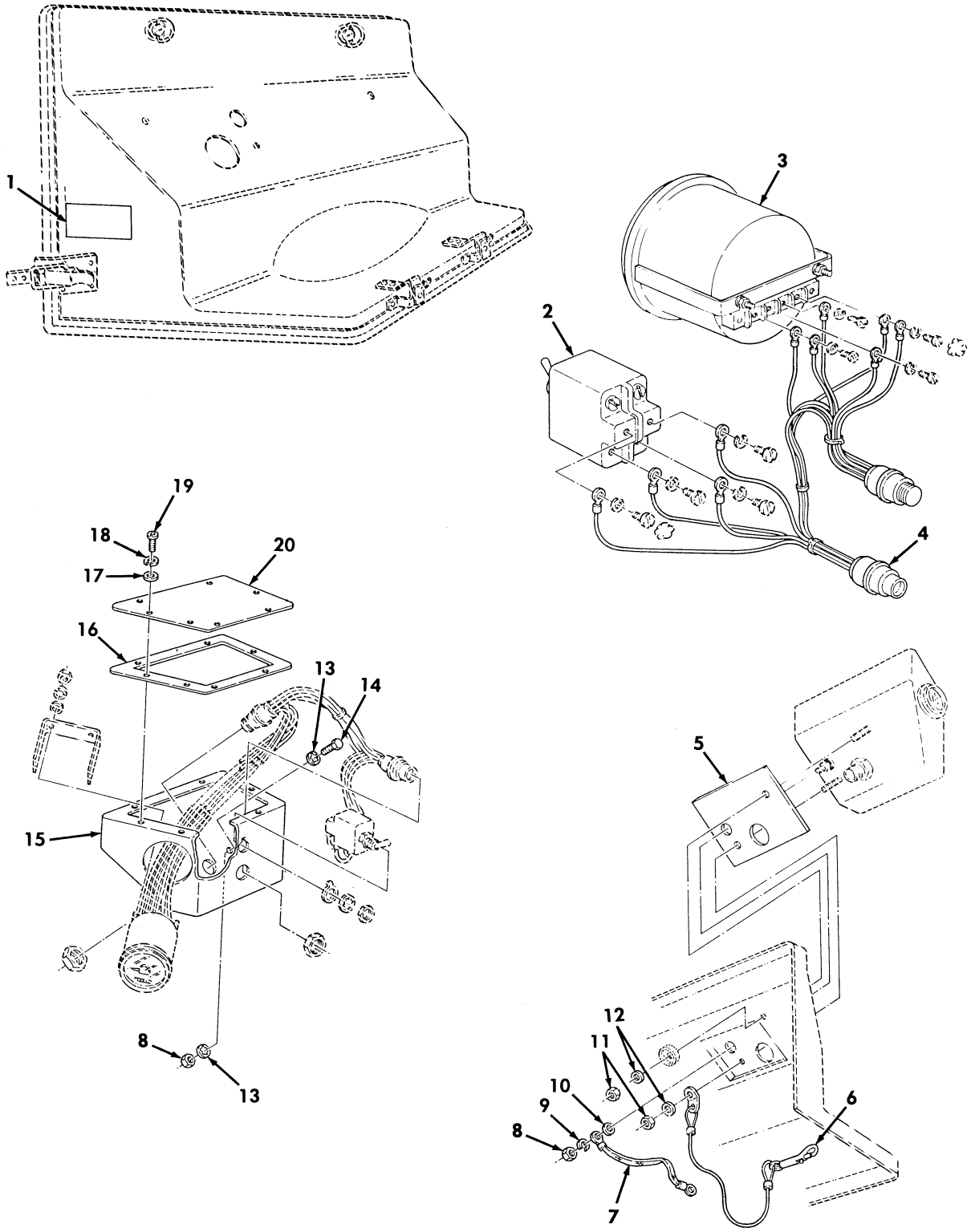

Figure 482. Tachometer Parts Kit.

(1) ITEM NO	(2) SMR CODE	(3) NSN	(4) CAGEC	(5) PART NUMBER	(6) DESCRIPTION AND USABLE ON CODES(UOC)	(7) QTY
					GROUP 3307 SPECIAL PURPOSE KITS	
					FIG. 482 TACHOMETER PARTS KIT	
1	PAOZA	7690014751197	19207	12469032	DECAL PART OF KIT P/N 57K3532..... UOC:AVY,A13,A14,BVY,HVY,H13,H14,H21, NNN	1
2	PAOZZ	5930008561654	96906	MS24659-23G	SWITCH,TOGGLE PART OF KIT P/N 57K3532..... UOC:AVY,A13,A14,BVY,HVY,H13,H14,H21, NNN	1
3	PAOZZ	6680014740384	06046	535K1-49383	TACHOMETER,ELECTRIC PART OF KIT P/N 57K3532..... UOC:AVY,A13,A14,BVY,HVY,H13,H14,H21, NNN	1
4	PAOZZ	6150014749676	19207	12469043	CABLE,ASSEMBLY,SPEC PART OF KIT P/N 57K3532..... UOC:AVY,A13,A14,BVY,HVY,H13,H14,H21, NNN	1
5	PAOZZ	5330014751671	19207	12469035	GASKET PART OF KIT P/N 57K3532..... UOC:AVY,A13,A14,BVY,HVY,H13,H14,H21, NNN	1
6	PAOZZ	4010013089168	57958	C5136341	WIRE ROPE ASSEMBLY, PART OF KIT P/N 57K3532..... UOC:AVY,A13,A14,BVY,HVY,H13,H14,H21, NNN	1
7	PAOZZ	5999014710710	19207	12469047	STRIP,ELECTRICAL GR PART OF KIT P/N 57K3532..... UOC:AVY,A13,A14,BVY,HVY,H13,H14,H21, NNN	1
8	PAOZZ	5310004776768	96906	MS35649-2384	NUT,PLAIN,HEXAGON PART OF KIT P/N 57K3532..... UOC:AVY,A13,A14,BVY,HVY,H13,H14,H21, NNN	2
9	PAOZZ	5310009847042	96906	MS35338-141	WASHER,LOCK PART OF KIT P/N 57K3532. UOC:AVY,A13,A14,BVY,HVY,H13,H14,H21, NNN	1
10	PAOZZ	5310008024701	96906	MS15795-813	WASHER,FLAT PART OF KIT P/N 57K3532. UOC:AVY,A13,A14,BVY,HVY,H13,H14,H21, NNN	1
11	PAOZZ	5310002089255	96906	MS21044-C3	NUT,SELF-LOCKING,HE PART OF KIT P/N 57K3532..... UOC:AVY,A13,A14,BVY,HVY,H13,H14,H21, NNN	2
12	PAOZZ	5310006191148	96906	MS15795-808	WASHER,FLAT PART OF KIT P/N 57K3532. UOC:AVY,A13,A14,BVY,HVY,H13,H14,H21, NNN	2
13	PAOZZ	5310005957237	61208	M2046S	WASHER,LOCK PART OF KIT P/N 57K3532. UOC:AVY,A13,A14,BVY,HVY,H13,H14,H21, NNN	2
14	PAOZZ	5305007215665	96906	MS35307-361	SCREW,CAP,HEXAGON H PART OF KIT P/N 57K3532..... UOC:AVY,A13,A14,BVY,HVY,H13,H14,H21,	1

(1) ITEM NO	(2) SMR CODE	(3) NSN	(4) CAGEC	(5) PART NUMBER	(6) DESCRIPTION AND USABLE ON CODES(UOC)	(7) QTY
					NNN	
15	PAOZZ	2540014753129	19207	12469034	HOUSING,TACHOMETER PART OF KIT P/N 57K3532..... UOC:AVY,A13,A14,BVY,HVY,H13,H14,H21, NNN	1
16	PAOZZ	5330013094340	57958	C5136338	GASKET PART OF KIT P/N 57K3532..... UOC:AVY,A13,A14,BVY,HVY,H13,H14,H21, NNN	1
17	PAOZZ	5310002255328	96906	MS15795-841	WASHER,FLAT PART OF KIT P/N 57K3532. UOC:AVY,A13,A14,BVY,HVY,H13,H14,H21, NNN	7
18	PAOZZ	5310009338119	81100	110401-8SS	WASHER,LOCK PART OF KIT P/N 57K3532. UOC:AVY,A13,A14,BVY,HVY,H13,H14,H21, NNN	7
19	PAOZZ	5305000546670	96906	MS51957-45	SCREW,MACHINE PART OF KIT P/N 57K3532..... UOC:AVY,A13,A14,BVY,HVY,H13,H14,H21, NNN	7
20	PAOZZ	5340013082168	57958	C5136336	COVER,ACCESS PART OF KIT P/N 57K3532 UOC:AVY,A13,A14,BVY,HVY,H13,H14,H21, NNN	1

END OF FIGURE

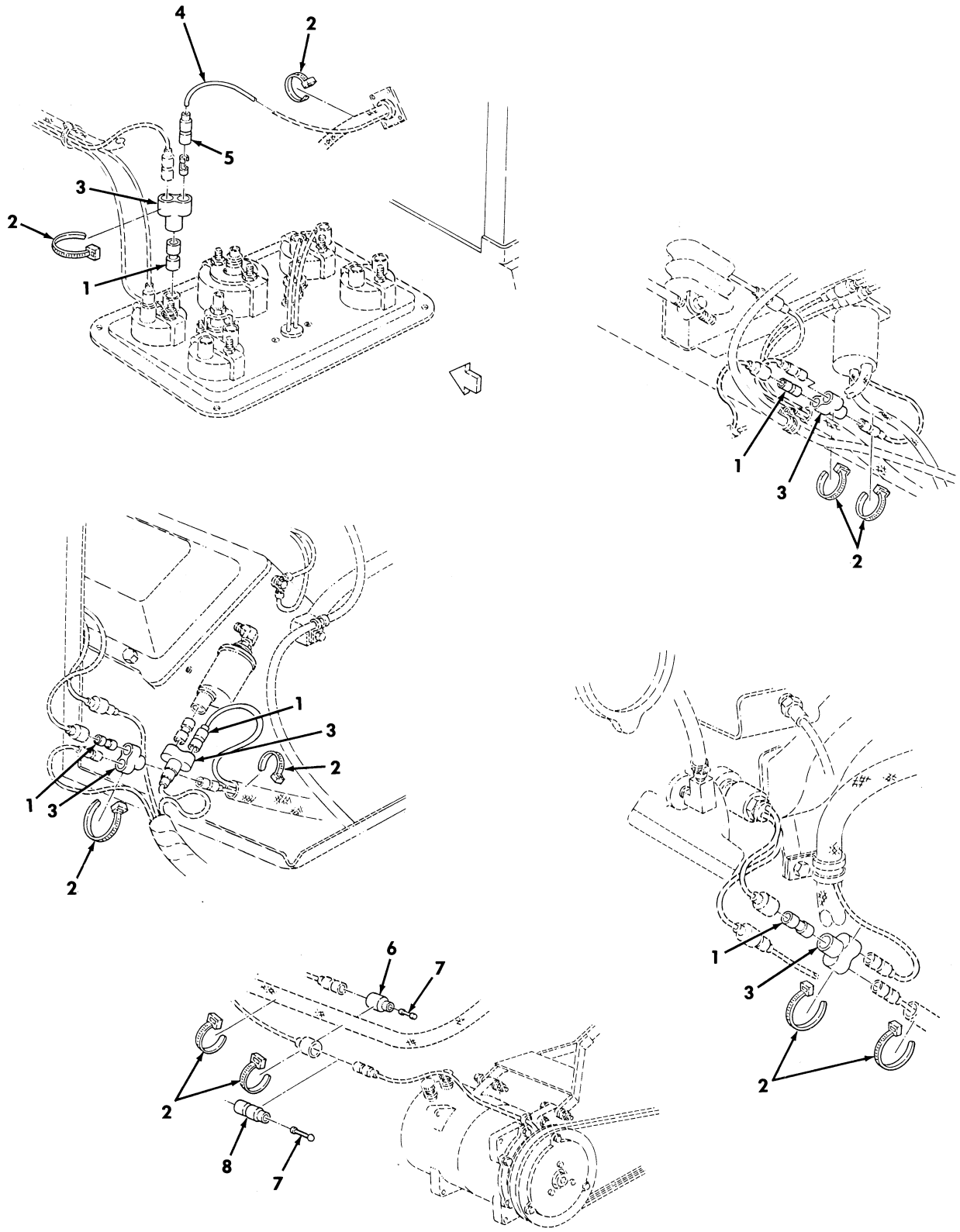

Figure 483. Tachometer Parts Kit.

(1) ITEM NO	(2) SMR CODE	(3) NSN	(4) CAGEC	(5) PART NUMBER	(6) DESCRIPTION AND USABLE ON CODES(UOC)	(7) QTY
					GROUP 3307 SPECIAL PURPOSE KITS	
					FIG. 483 TACHOMETER PARTS KIT	
1	PAOZZ	5935008074109	19207	8741492	ADAPTER,CONNECTOR PART OF KIT P/N 57K3532..... UOC:AVY,A13,A14,BVY,HVY,H13,H14,H21, NNN	5
2	PAOZZ	5975009856630	96906	MS3367-3-0	STRAP,TIEDOWN,ELECT PART OF KIT P/N 57K3532..... UOC:AVY,A13,A14,BVY,HVY,H13,H14,H21, NNN	12
3	PAOZZ	5935009006281	96906	MS27147-1	ADAPTER,CONNECTOR PART OF KIT P/N 57K3532..... UOC:AVY,A13,A14,BVY,HVY,H13,H14,H21, NNN	5
4	PAOZZ	6150014738663	19207	12469029	WIRING HARNESS,BRAN PART OF KIT P/N 57K3532..... UOC:AVY,A13,A14,BVY,HVY,H13,H14,H21, NNN	1
5	PAOZA	5935001152307	96906	MS27144-2	CONNECTOR,PLUG,ELEC PART OF KIT P/N 57K3532..... UOC:AVY,A13,A14,BVY,HVY,H13,H14,H21, NNN	1
6	PAOZZ	5935005729180	19207	8338566	SHELL,ELECTRICAL CO PART OF KIT P/N 57K3532..... UOC:AVY,A13,A14,BVY,HVY,H13,H14,H21, NNN	1
7	PAOZZ	5935002140904	19207	7982907	DUMMY CONNECTOR,PLU PART OF KIT P/N 57K3532..... UOC:AVY,A13,A14,BVY,HVY,H13,H14,H21, NNN	2
8	PAOZZ	5935008338561	19207	8338561	SHELL,ELECTRICAL CO PART OF KIT P/N 57K3532..... UOC:AVY,A13,A14,BVY,HVY,H13,H14,H21, NNN	1

END OF FIGURE

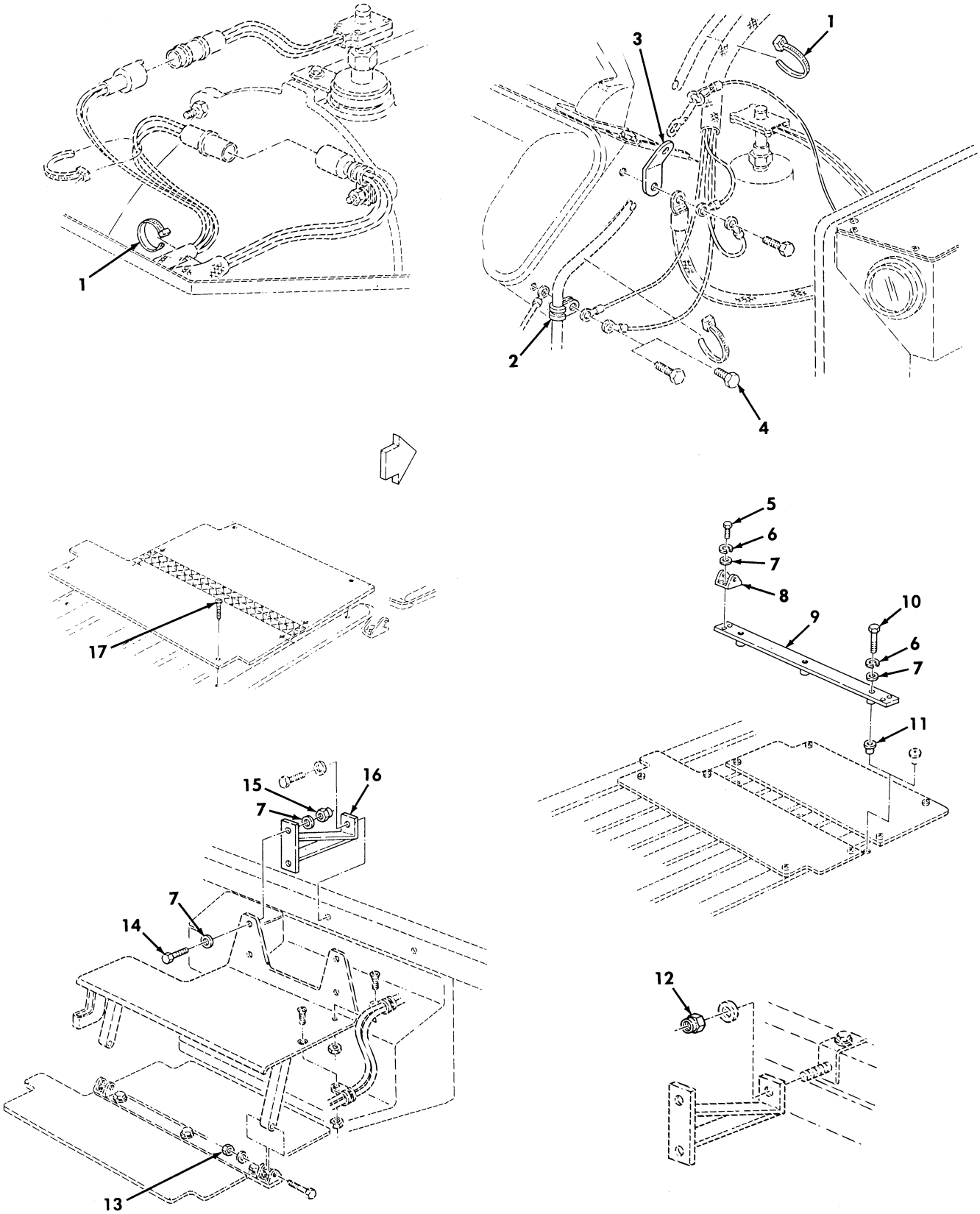

Figure 484. Tachometer Parts Kit.

(1) ITEM NO	(2) SMR CODE	(3) NSN	(4) CAGEC	(5) PART NUMBER	(6) DESCRIPTION AND USABLE ON CODES(UOC)	(7) QTY
					GROUP 3307 SPECIAL PURPOSE KITS	
					FIG. 484 TACHOMETER PARTS KIT	
1	PAOZZ	5975009856630	96906	MS3367-3-0	STRAP,TIEDOWN,ELECT PART OF KIT P/N 57K3532..... UOC:AVY,A13,A14,BVY,HVY,H13,H14,H21, NNN	4
2	PAOZZ	5340009891771	96906	MS21333-123	CLAMP,LOOP PART OF KIT P/N 57K3532.. UOC:AVY,A13,A14,BVY,HVY,H13,H14,H21, NNN	1
3	PAOZZ	5340013083851	57958	C5136342	BRACKET,ANGLE PART OF KIT P/N 57K3532..... UOC:AVY,A13,A14,BVY,HVY,H13,H14,H21, NNN	1
4	PAOZZ	5305013900547	80204	B18231B10020NF	SCREW,CAP,HEXAGON H PART OF KIT P/N 57K3532..... UOC:AVY,A13,A14,BVY,HVY,H13,H14,H21, NNN	1
5	PAOZZ	5305000680502	96906	MS90725-6	SCREW,CAP,HEXAGON H PART OF KIT P/N 57K3532..... UOC:AVY,A13,A14,BVY,HVY,H13,H14,H21, NNN	4
6	PAOZZ	5310005501130	96906	MS35333-40	WASHER,LOCK PART OF KIT P/N 57K3532. UOC:AVY,A13,A14,BVY,HVY,H13,H14,H21, NNN	7
7	PAOZZ	5310011023270	24617	2436161	WASHER,FLAT PART OF KIT P/N 57K3532. UOC:AVY,A13,A14,BVY,HVY,H13,H14,H21, NNN	15
8	PAOZZ	5340014743279	19207	12460543	BRACKET,DOUBLE ANGL PART OF KIT P/N 57K3532..... UOC:AVY,A13,A14,BVY,HVY,H13,H14,H21, NNN	2
9	PAOZZ	5340014740954	19207	12460544	PLATE,MOUNTING PART OF KIT P/N 57K3532..... UOC:AVY,A13,A14,BVY,HVY,H13,H14,H21, NNN	1
10	PAOZZ	5305000712510	80204	B1821BH025C175N	SCREW,CAP,HEXAGON H PART OF KIT P/N 57K3532..... UOC:AVY,A13,A14,BVY,HVY,H13,H14,H21, NNN	3
11	PAOZZ	5310014113422	78276	ALS4-420-165	NUT,PLAIN,BLIND RIV PART OF KIT P/N 57K3532..... UOC:AVY,A13,A14,BVY,HVY,H13,H14,H21, NNN	3
12	PAOZZ	5310009359022	96906	MS51943-32	NUT,SELF-LOCKING,HE PART OF KIT P/N 57K3532..... UOC:AVY,A13,A14,BVY,HVY,H13,H14,H21, NNN	2
13	PAOZZ	5310009359021	96906	MS51943-35	NUT,SELF-LOCKING,HE PART OF KIT P/N 57K3532..... UOC:AVY,A13,A14,BVY,HVY,H13,H14,H21, NNN	2

(1) ITEM NO	(2) SMR CODE	(3) NSN	(4) CAGEC	(5) PART NUMBER	(6) DESCRIPTION AND USABLE ON CODES(UOC)	(7) QTY
14	PAOZZ	5305002253843	80204	B1821BH025C100N	SCREW,CAP,HEXAGON H PART OF KIT P/N 57K3532..... UOC:AVY,A13,A14,BVY,HVY,H13,H14,H21, NNN	4
15	PAOZZ	5310000614650	96906	MS51943-31	NUT,SELF-LOCKING,HE PART OF KIT P/N 57K3532..... UOC:AVY,A13,A14,BVY,HVY,H13,H14,H21, NNN	4
16	PAOZZ	5340014330936	19207	12460542-2	BRACKET,MOUNTING PART OF KIT P/N 57K3532..... UOC:AVY,A13,A14,BVY,HVY,H13,H14,H21, NNN	2
17	PAOZZ	5305012707225	19207	12341822	SCREW,TAPPING THREA PART OF KIT P/N 57K3532..... UOC:AVY,A13,A14,BVY,HVY,H13,H14,H21, NNN	8
KIT	PAOZZ	5999014743213	19207	57K3532	PARTS KIT,TACHOMETE..... UOC:AVY,A13,A14,BVY,HVY,H13,H14,H21, NNN	1
					ADAPTER,CONNECTOR (5) 483-1	
					ADAPTER,CONNECTOR (5) 483-3	
					BRACKET,MOUNTING (2) 484-16	
					BRACKET,DOUBLE ANGL(2) 484-8	
					BRACKET,ANGLE (1) 484-3	
					CABLE,ASSEMBLY,SPEC(1) 482-4	
					CLAMP,LOOP (1) 484-2	
					CONNECTOR,PLUG,ELEC(1) 483-5	
					COVER,ACCESS (1) 482-20	
					DECAL (1) 482-1	
					DUMMY CONNECTOR,PLU(2) 483-7	
					GASKET (1) 482-5	
					GASKET (1) 482-16	
					HOUSING,TACHOMETER (1) 482-15	
					NUT,PLAIN,BLIND RIV(3) 484-11	
					NUT,PLAIN,HEXAGON (2) 482-8	
					NUT,SELF-LOCKING,HE(2) 482-11	
					NUT,SELF-LOCKING,HE(4) 484-15	
					NUT,SELF-LOCKING,HE(2) 484-12	
					NUT,SELF-LOCKING,HE(2) 484-13	
					PLATE,MOUNTING (1) 484-9	
					SCREW,CAP,HEXAGON H(1) 482-14	
					SCREW,CAP,HEXAGON H(4) 484-5	
					SCREW,CAP,HEXAGON H(4) 484-14	
					SCREW,CAP,HEXAGON H(3) 484-10	
					SCREW,CAP,HEXAGON H(1) 484-4	
					SCREW,MACHINE (7) 482-19	
					SCREW,TAPPING THREA(8) 484-17	
					SHELL,ELECTRICAL CO(1) 483-8	
					SHELL,ELECTRICAL CO(1) 483-6	
					STRAP,TIEDOWN,ELECT(12) 483-2	
					STRAP,TIEDOWN,ELECT(4) 484-1	
					STRIP,ELECTRICAL GR(1) 482-7	
					SWITCH,TOGGLE (1) 482-2	

(1) ITEM NO	(2) SMR CODE	(3) NSN	(4) CAGEC	(5) PART NUMBER	(6) DESCRIPTION AND USABLE ON CODES(UOC)	(7) QTY
					TACHOMETER,ELECTRIC(1) 482-3	
					WASHER,FLAT (2) 482-12	
					WASHER,FLAT (1) 482-10	
					WASHER,FLAT (7) 482-17	
					WASHER,FLAT (15) 484-7	
					WASHER,LOCK (2) 482-13	
					WASHER,LOCK (7) 482-18	
					WASHER,LOCK (1) 482-9	
					WASHER,LOCK (7) 484-6	
					WIRE ROPE ASSEMBLY,(1) 482-6	
					WIRING HARNESS,BRAN(1) 483-4	

END OF FIGURE

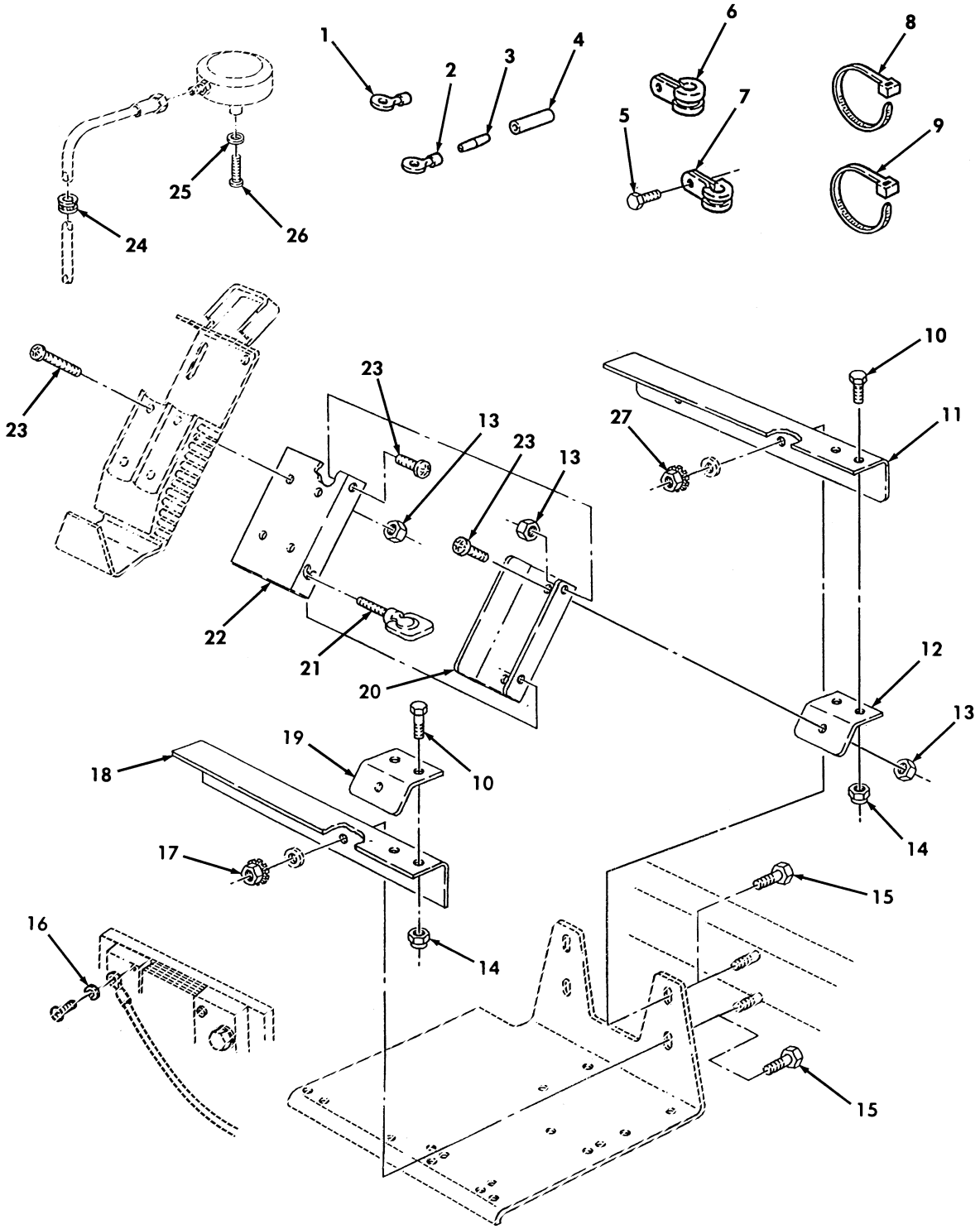

Figure 485. Precision Lightweight Global Positioning System Receiver (PLGR).

(1) ITEM NO	(2) SMR CODE	(3) NSN	(4) CAGEC	(5) PART NUMBER	(6) DESCRIPTION AND USABLE ON CODES(UOC)	(7) QTY
					GROUP 3307 SPECIAL PURPOSE KITS	
					FIG. 485 PRECISION LIGHTWEIGHT GLOGAL POSTIONING SYSTEM RECEIVER (PLGR)	
1	PAOZZ	5940009834067	16528	7728777	TERMINAL,LUG PART OF KIT P/N 57K3233 UOC:A11,B17,B18,C17,H11,H17,H18,MMM	1
2	PAOZZ	5940010354212	19207	7728780	TERMINAL,LUG PART OF KIT P/N 57K3233 UOC:A11,B17,B18,C17,H11,H17,H18,MMM	1
3	PAOZZ	5940001139420	80205	NAS1387-4	SPLICE,CONDUCTOR PART OF KIT P/N 57K3233..... UOC:A11,B17,B18,C17,H11,H17,H18,MMM	2
4	PAOZZ	5970010489378	81349	M23053/4-103-0	INSULATION SLEEVING PART OF KIT P/N 57K3233..... UOC:A11,B17,B18,C17,H11,H17,H18,MMM	1
5	PAOZZ	5305004324201	96906	MS51861-45	SCREW,TAPPING PART OF KIT P/N 57K3233..... UOC:A11,B17,B18,C17,H11,H17,H18,MMM	1
6	PAOZZ	5340009050790	96906	MS21333-65	CLAMP,LOOP PART OF KIT P/N 57K3233.. UOC:A11,B17,B18,C17,H11,H17,H18,MMM	1
7	PAOZZ	5340000881255	96906	MS21333-96	CLAMP,LOOP PART OF KIT P/N 57K3233.. UOC:A11,B17,B18,C17,H11,H17,H18,MMM	1
8	PAOZZ	5975000742072	96906	MS3367-1-9	STRAP,TIEDOWN,ELECT PART OF KIT P/N 57K3233..... UOC:A11,B17,B18,C17,H11,H17,H18,MMM	2
9	PAOZZ	5975012055379	96906	MS3367-7	STRAP,TIEDOWN,ELECT PART OF KIT P/N 57K3233..... UOC:A11,B17,B18,C17,H11,H17,H18,MMM	1
10	PAOZZ	5305000680508	80204	B1821BH025C075N	SCREW,CAP,HEXAGON H PART OF KIT P/N 57K3233..... UOC:A11,B17,B18,C17,H11,H17,H18,MMM	4
11	PAOZA	5340014662451	19207	12460221	BRACKET,ANGLE PART OF KIT P/N 57K3233..... UOC:A11,B17,B18,C17,H11,H17,H18,MMM	1
12	PAOZA	5340014711040	19207	12460220-1	BRACKET,ANGLE PART OF KIT P/N 57K3233..... UOC:A11,B17,B18,C17,H11,H17,H18,MMM	1
13	PAOZZ	5310001249265	72582	271169	NUT,PLAIN,ASSEMBLED #10-32 PART OF KIT P/N 57K3233..... UOC:A11,B17,B18,C17,H11,H17,H18,MMM	8
14	PAOZZ	5310000614650	96906	MS51943-31	NUT,SELF-LOCKING,HE PART OF KIT P/N 57K3233..... UOC:A11,B17,B18,C17,H11,H17,H18,MMM	4
15	PAOZZ	5305002678953	80204	B1821BH025F063N	SCREW,CAP,HEXAGON H PART OF KIT P/N 57K3233..... UOC:A11,B17,B18,C17,H11,H17,H18,MMM	2
16	PAOZZ	5310000453296	96906	MS35338-43	WASHER,LOCK PART OF KIT P/N 57K3233. UOC:A11,B17,B18,C17,H11,H17,H18,MMM	1
17	PAOZZ	5310009359022	96906	MS51943-32	NUT,SELF-LOCKING,HE PART OF KIT P/N 57K3233..... UOC:A11,B17,B18,C17,H11,H17,H18,MMM	2
18	PAOZA	5340014662438	19207	12460222	BRACKET,ANGLE PART OF KIT P/N	1

(1) ITEM NO	(2) SMR CODE	(3) NSN	(4) CAGEC	(5) PART NUMBER	(6) DESCRIPTION AND USABLE ON CODES(UOC)	(7) QTY
					57K3233.....	
					UOC:A11,B17,B18,C17,H11,H17,H18,MMM	
19	PAOZA	5340014661985	19207	12460220-2	BRACKET,ANGLE PART OF KIT P/N	1
					57K3233.....	
					UOC:A11,B17,B18,C17,H11,H17,H18,MMM	
20	PAOZA	5340014662606	19207	12460219	BRACKET,DOUBLE ANGL PART OF KIT P/N	1
					57K3233.....	
					UOC:A11,B17,B18,C17,H11,H17,H18,MMM	
21	PAOZZ	5305014717623	19207	12460223	THUMBSCREW PART OF KIT P/N 57K3233..	1
					UOC:A11,B17,B18,C17,H11,H17,H18,MMM	
22	PAOZA	5340014662611	19207	12460218	BRACKET,DOUBLE ANGL PART OF KIT P/N	1
					57K3233.....	
					UOC:A11,B17,B18,C17,H11,H17,H18,MMM	
23	PAOZZ	5305014077713	24617	160052	SCREW,MACHINE PART OF KIT P/N	8
					57K3233.....	
					UOC:A11,B17,B18,C17,H11,H17,H18,MMM	
24	PAOZZ	5325012927558	96906	MS35489-143	GROMMET,NONMETALLIC PART OF KIT P/N	1
					57K3233.....	
					UOC:A11,B17,B18,C17,H11,H17,H18,MMM	
25	PAOZZ	5310013611163	24617	9417373	WASHER,FLAT PART OF KIT P/N 57K3233.	1
					UOC:A11,B17,B18,C17,H11,H17,H18,MMM	
26	PAOZZ	5305009906444	96906	MS35207-261	SCREW,MACHINE PART OF KIT P/N	1
					57K3233.....	
					UOC:A11,B17,B18,C17,H11,H17,H18,MMM	
27	PAOZZ	5310013335245	24617	271175	NUT,SELF-LOCKING,HE PART OF KIT P/N	2
					57K3233.....	
					UOC:A11,B17,B18,C17,H11,H17,H18,MMM	
KIT	PAOZZ	2590014204179	19207	57K3233	PARTS KIT,BRACKET,V.....	1
					UOC:A11,B17,B18,C17,H11,H17,H18,MMM	
					BRACKET,ANGLE (1) 485-11	
					BRACKET,ANGLE (1) 485-12	
					BRACKET,ANGLE (1) 485-18	
					BRACKET,ANGLE (1) 485-19	
					BRACKET,DOUBLE ANGL(1) 485-20	
					BRACKET,DOUBLE ANGL(1) 485-22	
					CLAMP,LOOP (1) 485-6	
					CLAMP,LOOP (1) 485-7	
					GROMMET,NONMETALLIC(1) 485-24	
					INSULATION SLEEVING(1) 485-4	
					NUT,PLAIN,ASSEMBLED(8) 485-13	
					NUT,SELF-LOCKING,HE(4) 485-14	
					NUT,SELF-LOCKING,HE(2) 485-17	
					NUT,SELF-LOCKING,HE(2) 485-27	
					SCREW,CAP,HEXAGON H(4) 485-10	
					SCREW,CAP,HEXAGON H(2) 485-15	
					SCREW,MACHINE (8) 485-23	
					SCREW,MACHINE (1) 485-26	
					SCREW,TAPPING (1) 485-5	
					SPLICE,CONDUCTOR (2) 485-3	
					STRAP,TIEDOWN,ELECT(2) 485-8	
					STRAP,TIEDOWN,ELECT(1) 485-9	
					TERMINAL,LUG (1) 485-1	
					TERMINAL,LUG (1) 485-2	

(1) ITEM NO	(2) SMR CODE	(3) NSN	(4) CAGEC	(5) PART NUMBER	(6) DESCRIPTION AND USABLE ON CODES(UOC)	(7) QTY
					THUMBSCREW (1) 485-21	
					WASHER,FLAT (1) 485-25	
					WASHER,LOCK (1) 485-16	

END OF FIGURE

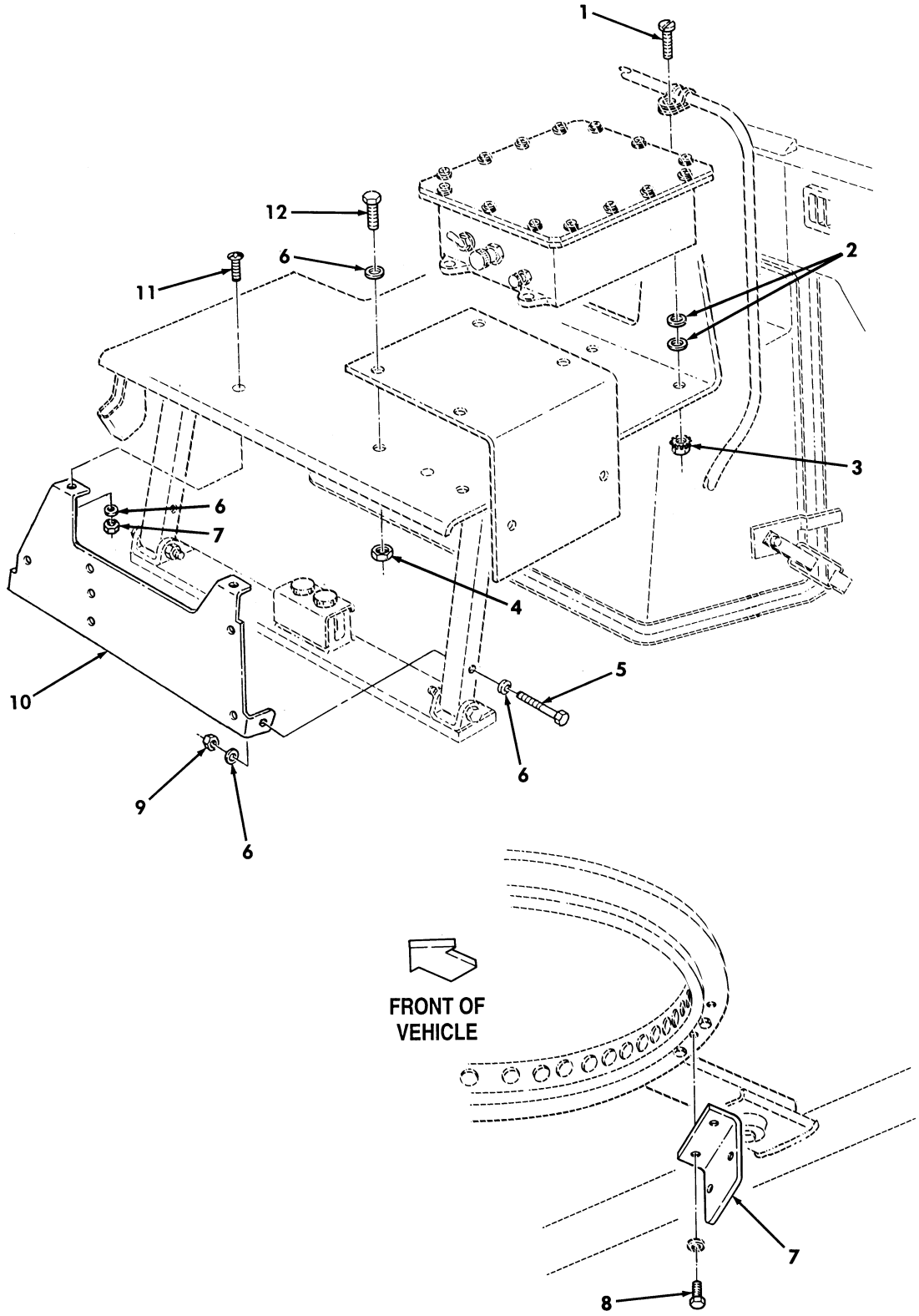

Figure 486. Kit, Intercom Bracket.

(1) ITEM NO	(2) SMR CODE	(3) NSN	(4) CAGEC	(5) PART NUMBER	(6) DESCRIPTION AND USABLE ON CODES(UOC)	(7) QTY
					GROUP 3307 SPECIAL PURPOSE KITS	
					FIG. 486 KIT,INTERCOM BRACKET	
1	PAOZZ	5305014672711	24617	160069	SCREW,MACHINE #10-32X1 PART OF KIT P/N 57K3488..... UOC:B17,B18,C17,H17,H18	4
2	PAOZZ	5310012175205	24617	9417714	WASHER,FLAT #10FLAT PART OF KIT P/N 57K3488..... UOC:B17,B18,C17,H17,H18	8
3	PAOZZ	5310002514503	24617	9411893	NUT,LOCK #10-32 PART OF KIT P/N 57K3488..... UOC:B17,B18,C17,H17,H18	4
4	PAOZZ	5310014326727	24617	9419471	NUT,SELF-LOCKING,HE 1/4-20 PART OF KIT P/N 57K3488..... UOC:B17,B18,C17,H17,H18	2
5	PAOZZ	5305000712237	96906	MS90725-14	SCREW,CAP,HEXAGON H 1/4-20X2.00 PART OF KIT P/N 57K3488..... UOC:B17,B18,C17,H17,H18	2
6	PAOZZ	5310011023270	24617	2436161	WASHER,FLAT 1/4 PART OF KIT P/N 57K3488..... UOC:B17,B18,C17,H17,H18	8
7	PAOZZ	5340014674153	80063	A3157855	BRACKET,ANGLE #10-32X1 PART OF KIT P/N 57K3488..... UOC:B17,B18,C17,H17,H18	1
8	PAOZZ	5305008213869	80204	B1821BH038C175N	SCREW,CAP,HEXAGON H 3/8-16 X 1.75 PART OF KIT P/N 57K3488..... UOC:B17,B18,C17,H17,H18	2
9	PAOZZ	5310000614650	96906	MS51943-31	NUT,SELF-LOCKING,HE 1/4-20 PART OF KIT P/N 57K3488..... UOC:B17,B18,C17,H17,H18	4
10	PAOZZ	5340012708489	19207	12340879	BRACKET,MOUNTING PART OF KIT P/N 57K3488..... UOC:B17,B18,C17,H17,H18	1
11	PAOZZ	5305007195021	96906	MS51959-81	SCREW,MACHINE 1/4-20X.75 PART OF KIT P/N 57K3488..... UOC:B17,B18,C17,H17,H18	2
12	PAOZZ	5305002253843	80204	B1821BH025C100N	SCREW,CAP,HEXAGON H 1/4-20X1.00 PART OF KIT P/N 57K3488..... UOC:B17,B18,C17,H17,H18	2
KIT	PAOZZ	2590014293008	19207	57K3488	PARTS KIT,BRACKET,V..... UOC:B17,B18,C17,H17,H18	1
					BRACKET,ANGLE (1) 486-7	
					BRACKET,MOUNTING (1) 486-10	
					NUT,LOCK (4) 486-3	
					NUT,SELF-LOCKING,HE(2) 486-4	
					NUT,SELF-LOCKING,HE(4) 486-9	
					SCREW,CAP,HEXAGON H(2) 486-5	
					SCREW,CAP,HEXAGON H(2) 486-8	
					SCREW,CAP,HEXAGON H(2) 486-12	
					SCREW,MACHINE (4) 486-1	
					SCREW,MACHINE (2) 486-11	
					WASHER,FLAT (8) 486-2	

(1) ITEM NO	(2) SMR CODE	(3) NSN	(4) CAGEC	(5) PART NUMBER	(6) DESCRIPTION AND USABLE ON CODES(UOC)	(7) QTY
					WASHER,FLAT (8) 486-6	

END OF FIGURE

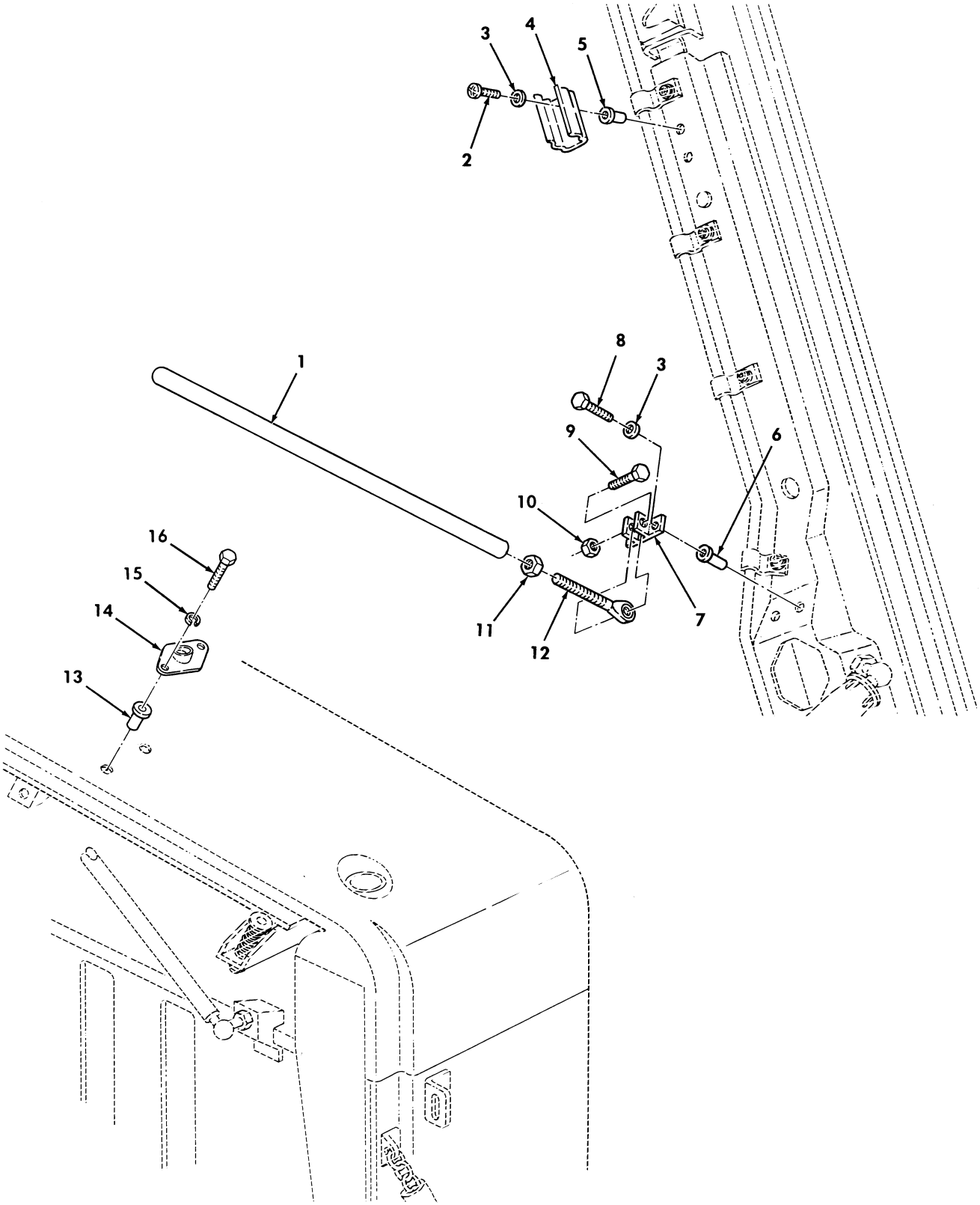

Figure 487. Kit, Rear Hatch Support

(1) ITEM NO	(2) SMR CODE	(3) NSN	(4) CAGEC	(5) PART NUMBER	(6) DESCRIPTION AND USABLE ON CODES(UOC)	(7) QTY
					GROUP 3307 SPECIAL PURPOSE KITS	
					FIG. 487 KIT,REAR HATCH SUPPORT	
1	PAOZZ	5342014594992	19207	12460330	EXTENSION,CONTROL R PART OF KIT P/N 57K3243..... UOC:A25,A26,B17,B18,B25,C17,H17,H18, H25,H26	1
2	PAOZZ	5305014077713	24617	160052	SCREW,MACHINE PART OF KIT P/N 57K3243..... UOC:A25,A26,B17,B18,B25,C17,H17,H18, H25,H26	2
3	PAOZZ	5310009222017	30379	120217	WASHER,LOCK PART OF KIT P/N 57K3243. UOC:A25,A26,B17,B18,B25,C17,H17,H18, H25,H26	4
4	PAOZZ	5340014508693	81343	NAS1464-050-10T	CLIP,SPRING TENSION PART OF KIT P/N 57K3243..... UOC:A25,A26,B17,B18,B25,C17,H17,H18, H25,H26	1
5	PAOZZ	5310009901361	96906	MS27130-S25	NUT,PLAIN,BLIND RIV PART OF KIT P/N 57K3243..... UOC:A25,A26,B17,B18,B25,C17,H17,H18, H25,H26	4
6	PAOZZ	5310010465371	96906	MS27130-CR27	NUT,PLAIN,BLIND RIV PART OF KIT P/N 57K3243..... UOC:A25,A26,B17,B18,B25,C17,H17,H18, H25,H26	2
7	PAOZZ	5340014695774	19207	12460331	BRACKET,MULTIPLE AN PART OF KIT P/N 57K3243..... UOC:A25,A26,B17,B18,B25,C17,H17,H18, H25,H26	1
8	PAOZZ	5305000187838	24617	187838	SCREW,CAP,HEXAGON H PART OF KIT P/N 57K3243..... UOC:A25,A26,B17,B18,B25,C17,H17,H18, H25,H26	2
9	PAOZZ	5305000680509	80204	B1821BH025C125N	SCREW,CAP,HEXAGON H PART OF KIT P/N 57K3243..... UOC:A25,A26,B17,B18,B25,C17,H17,H18, H25,H26	1
10	PAOZZ	5310014326727	24617	9419471	NUT,SELF-LOCKING,HE PART OF KIT P/N 57K3243..... UOC:A25,A26,B17,B18,B25,C17,H17,H18, H25,H26	1
11	PAOZZ	5310007680319	96906	MS51968-2	NUT,PLAIN,HEXAGON PART OF KIT P/N 57K3243..... UOC:A25,A26,B17,B18,B25,C17,H17,H18, H25,H26	1
12	PAOZZ		81343	SAEJ1120	ROD END,THREADED SIZE4,TYPEB3 PART OF KIT P/N 57K3243..... UOC:A25,A26,B17,B18,B25,C17,H17,H18, H25,H26	1
13	PAOZZ	5310000802411	96906	MS27130-S43	NUT,PLAIN,BLIND RIV PART OF KIT P/N 57K3243.....	2

(1) ITEM NO	(2) SMR CODE	(3) NSN	(4) CAGEC	(5) PART NUMBER	(6) DESCRIPTION AND USABLE ON CODES(UOC)	(7) QTY
					UOC:B17,B18,C17,H17,H18	
13	PAOZZ	5310010805746	96906	MS27130-S44	NUT,PLAIN,BLIND RIV PART OF KIT P/N 57K3243.....	2
					UOC:A25,A26,B25,H25,H26	
14	PAOZZ	5340014515903	19207	12460329	PLATE,MOUNTING PART OF KIT P/N 57K3243.....	1
					UOC:A25,A26,B17,B18,B25,C17,H17,H18, H25,H26	
15	PAOZZ	5310004079566	96906	MS-35338-45	WASHER,LOCK PART OF KIT P/N 57K3243.	2
					UOC:A25,A26,B17,B18,B25,C17,H17,H18, H25,H26	
16	PAOZZ	5306002264825	80204	B1821BH031C075N	BOLT,MACHINE PART OF KIT P/N 57K3243	2
					UOC:A25,A26,B17,B18,B25,C17,H17,H18, H25,H26	
KIT	PAOZZ	2510014338551	19207	57K3243	PARTS KIT,CARGO HAT.....	1
					UOC:A25,A26,B17,B18,B25,C17,H17,H18, H25,H26	
					BOLT,MACHINE (2) 487-16	
					BRACKET,MULTIPLE AN(1) 487-7	
					CLIP,SPRING TENSION(1) 487-4	
					EXTENSION,CONTROL R(1) 487-1	
					NUT,PLAIN,BLIND RIV(4) 487-5	
					NUT,PLAIN,BLIND RIV(2) 487-6	
					NUT,PLAIN,BLIND RIV(2) 487-13	
					NUT,PLAIN.BLIND RIV(2) 487-13	
					NUT,PLAIN,HEXAGON (1) 487-11	
					NUT,SELF-LOCKING,HE(1) 487-10	
					PLATE,MOUNTING (1) 487-14	
					ROD,END (1) 487-12	
					SCREW,CAP,HEXAGON H(2) 487-8	
					SCREW,CAP,HEXAGON H(1) 487-9	
					SCREW,MACHINE (2) 487-2	
					WASHER,LOCK (4) 487-3	
					WASHER,LOCK (2) 487-15	

END OF FIGURE

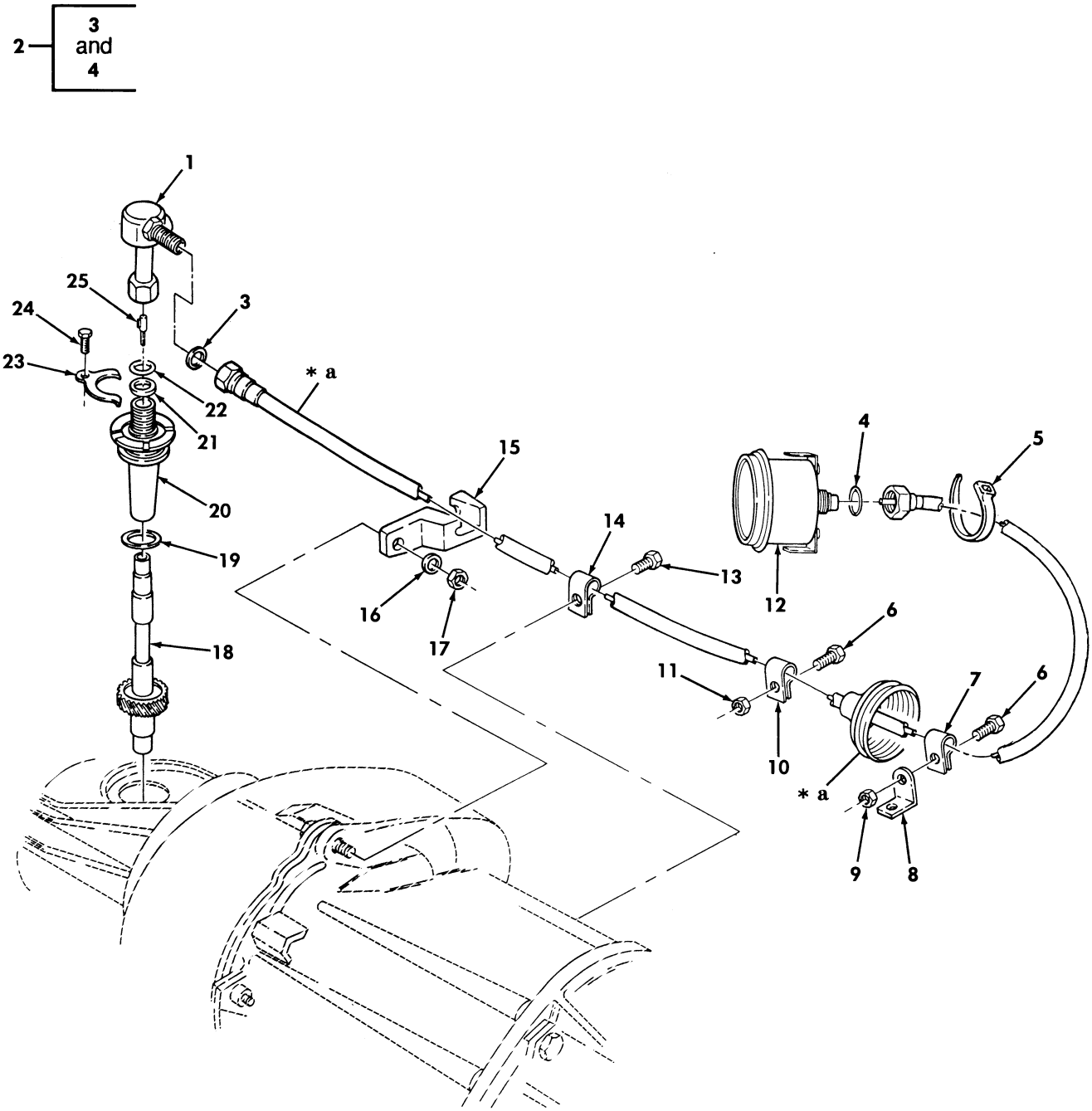

* a PART OF ITEM 2

Figure 488. Speedometer, Speedometer Drive, and Related Parts.

(1) ITEM NO	(2) SMR CODE	(3) NSN	(4) CAGEC	(5) PART NUMBER	(6) DESCRIPTION AND USABLE ON CODES(UOC)	(7) QTY
					GROUP 47 GAGES,WEIGHTING AND MEASURE -ING DEVICES	
					4701 INSTRUMENTS	
					FIG. 488 SPEEDOMETER,SPEEDOMETER DRIVE,AND RELATED PARTS	
1	PAOZZ	2590012125868	7Z588	SP-311	ADAPTER,SPEEDOMETER.....	1
2	PAOZZ	6680014429413	19200	12338428-2	SHAFT ASSEMBLY,FLEX..... UOC:BVY,B15,B20,B24,B25,C17,NNN	1
2	PAOZZ	6680011918783	19207	12338428	SHAFT ASSEMBLY,FLEX..... UOC:AVY,A11,A13,A14,A15,A20,A24,A25, A26,A27,B16,B17,B18,HVY,H11,H13,H14, H15,H16,H17,H18,H20,H21,H24,H25,H26, H27,H28,MMM	1
3	PAOZZ	5331012167392	19207	12338998	.O-RING.....	1
4	PAOZZ	5331012167393	19207	12338997	.O-RING.....	1
5	PAOZZ	5975001563253	96906	MS3367-2-9	STRAP,TIEDOWN,ELECT..... UOC:BVY,B15,B20,B24,B25,C17,NNN	1
6	PAOZZ	5305005829501	82386	410-63	SCREW,CAP,HEXAGON H #10-32 X 1/2... UOC:BVY,B15,B20,B24,B25,C17,NNN	2
6	PAOZZ	5305005829501	82386	410-63	SCREW,CAP,HEXAGON H #10-32 X 1/2... UOC:AVY,A11,A13,A14,A15,A20,A24,A25, A26,A27,B16,B17,B18,HVY,H11,H13,H14, H15,H16,H17,H18,H20,H21,H24,H25,H26, H27,H28,MMM	1
7	PAOZZ	5340006899514	96906	MS21333-70	CLAMP,LOOP..... UOC:BVY,B15,B20,B24,B25,C17,NNN	2
8	PAOZZ	5340014481213	19207	12460199	BRACKET,ANGLE..... UOC:BVY,B15,B20,B24,B25,C17,NNN	2
9	PAOZZ	5310001249265	72582	271169	NUT,PLAIN,ASSEMBLED #10-32..... UOC:BVY,B15,B20,B24,B25,C17,NNN	2
10	PAOZZ	5340001501658	17773	11176106-5	CLAMP,LOOP.....	1
11	PAOZZ	5310001249265	24617	271169	NUT,PLAIN,ASSEMBLED #10-32.....	1
12	PAOZZ	6680011952146	19207	12338463	SPEEDOMETER.....	1
13	PAOZZ	5305007578122	96906	MS51851-64	SCREW,TAPPING #10-24 X 3/8.....	1
14	PAOZZ	5340000913790	96906	MS21333-72	CLAMP,LOOP.....	1
15	PAOZZ	5342011937088	34623	5583576	BRACKET.....	1
16	PAOZZ	5310005956057	96906	MS15795-815	WASHER,FLAT 10MM.....	1
17	PAOZZ	5310012666392	34623	5593047	NUT,PLAIN,HEXAGON 10M-1.5.....	1
18	PAOZZ	3040012443646	92871	3212735	GEARSHAFT,HELICAL..... UOC:HVY,H11,H13,H14,H15,H16,H17,H18, H20,H21,H24,H25,H26,H27,H28,MMM	1
18	PAOZZ	3040013587034	34623	12342602	GEARSHAFT,HELICAL..... UOC:AVY,A11,A13,A14,A15,A20,A24,A25, A26,A27,BVY,B15,B16,B17,B18,B20,B24, B25,C17,HVY,NNN	1
19	PAOZZ	5331011958889	34623	12339002	O-RING.....	1
20	PAOZZ	3040011923673	92871	J3212893	ADAPTER,SPEEDOMETER.....	1
21	PAOZZ	5330012554986	34623	5595643	RETAINER,PACKING.....	1
22	PAOZZ	5325012671107	86403	2538571	RING,RETAINING.....	1
23	PAOZZ	6680002690335	86403	2892399	STRAP,RETAINING.....	1
24	PAOZZ	5306002264824	80204	B1821BH031C063N	BOLT,MACHINE.....	1

(1) ITEM NO	(2) SMR CODE	(3) NSN	(4) CAGEC	(5) PART NUMBER	(6) DESCRIPTION AND USABLE ON CODES(UOC)	(7) QTY
25	PAOZZ	5315014091662	7Z588	30448-D	PIN,SHOULDER,HEADLE.....	1

END OF FIGURE

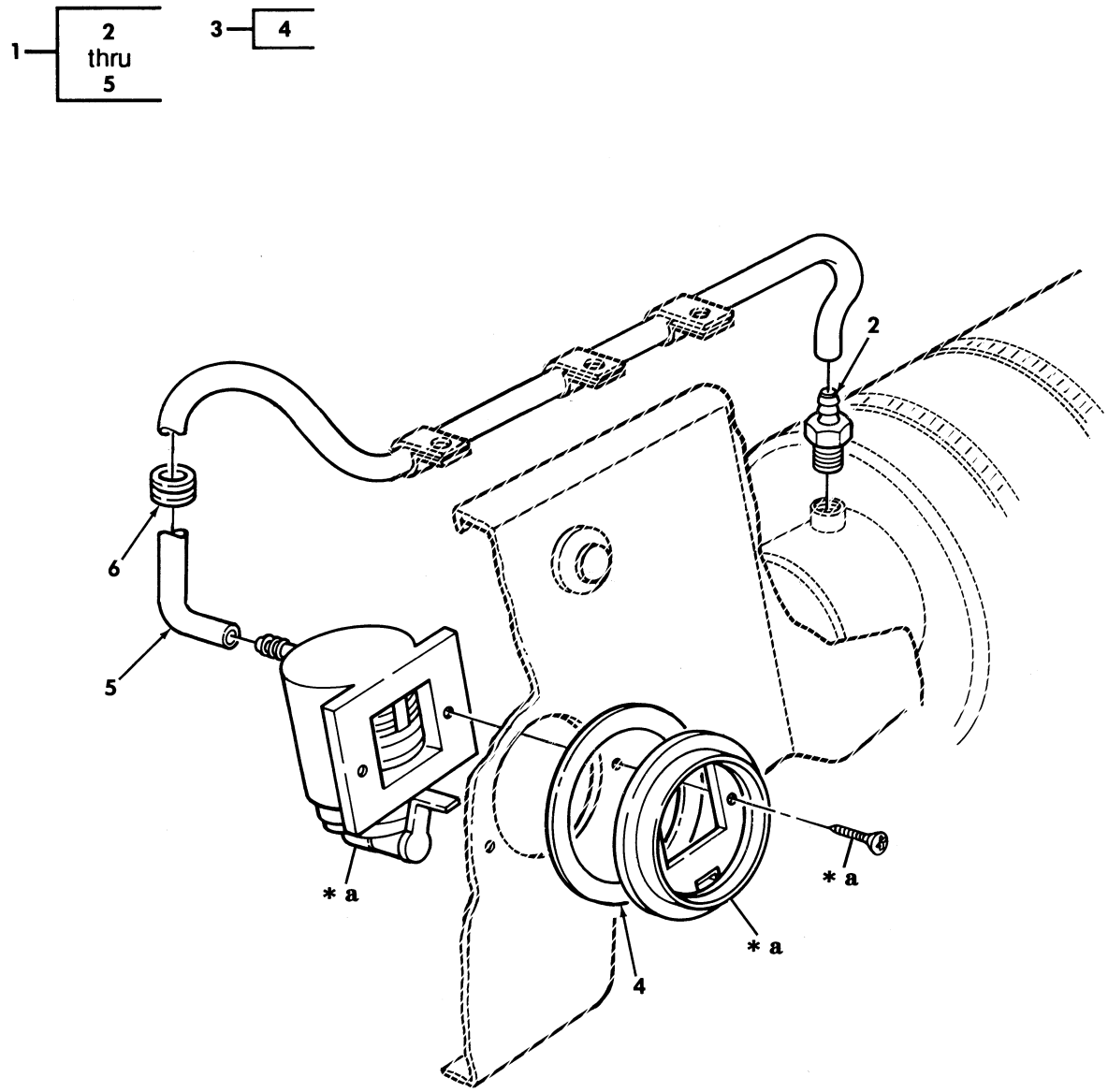

* a PART OF ITEM 3

Figure 489. Air Restriction Indicator Assembly.

(1) ITEM NO	(2) SMR CODE	(3) NSN	(4) CAGEC	(5) PART NUMBER	(6) DESCRIPTION AND USABLE ON CODES(UOC)	(7) QTY
					GROUP 4702 GAGES,MOUNTING LINES AND FITTINGS	
					FIG. 489 AIR RESTRICTION INDICATOR ASSEMBLY	
1	PAOOO	2940011761427	59150	4755-725	INDICATOR,FILTER WA.....	1
2	PAOZZ	4730011894600	59150	1675-182	.ADAPTER,STRAIGHT,PI.....	1
3	XAOZZ		59150	1755-724	.INDICATOR.....	1
4	PAOZZ	5330014769295	19207	12340078-3	..GASKET.....	1
5	MOOZZ		19207	12340078-5	.HOSE MAKE FROM HOSE,P/N 1775-826, 7.00 FEET LONG.....	1
6	PAOZZ	5325002766228	87585	ANA9-5	GROMMET,NONMETALLIC.....	1

END OF FIGURE

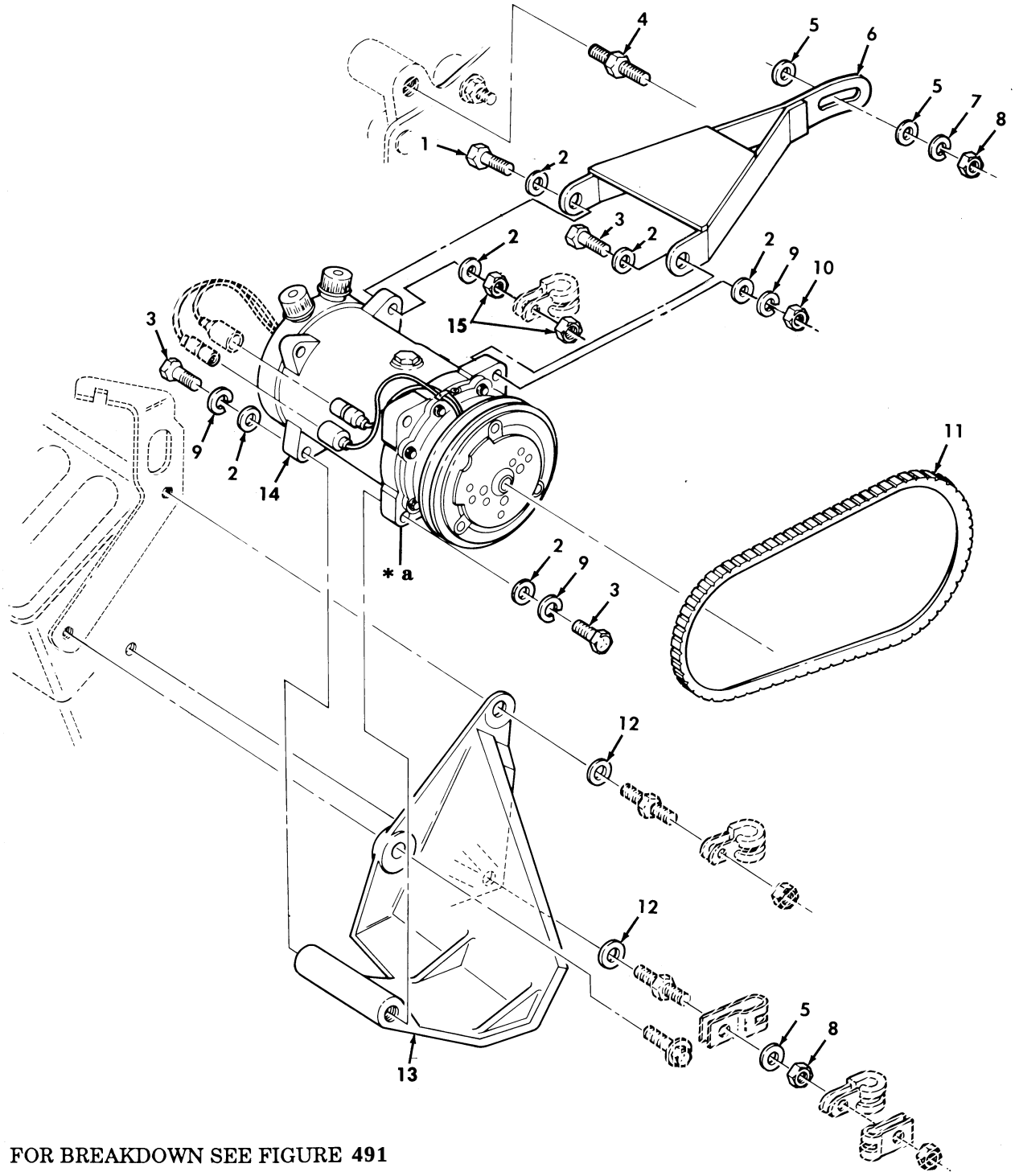

* a FOR BREAKDOWN SEE FIGURE 491

Figure 490. Air Conditioner Compressor and Mounting Hardware, M997 and M997A1 Ambulance.

(1) ITEM NO	(2) SMR CODE	(3) NSN	(4) CAGEC	(5) PART NUMBER	(6) DESCRIPTION AND USABLE ON CODES(UOC)	(7) QTY
					GROUP 52 REFRIGERATION,AIR CONDITIONER,HEATER AND AIR CONDITIONING COMPONENTS	
					5203 AIR CONDITIONING COMPONENTS	
					FIG. 490 AIR CONDITIONER COMPRESSOR AND MOUNTING HARDWARE,M997 AND M997A1 AMBULANCE	
1	PAOZZ	5305007252317	80204	B1821BH038C150N	SCREW,CAP,HEXAGON H 3/8-16 X 1.50.. UOC:A15,H15	1
2	PAOZZ	5310000877493	96906	MS27183-13	WASHER,FLAT 3/8..... UOC:A15,H15	7
3	PAOZZ	5305007829489	80204	B1821BH038C200N	SCREW,CAP,HEXAGON H 3/8-16 X 2.00.. UOC:A15,H15	3
4	PAFZZ	5307012919018	19207	12339406-2	STUD,SHOULDERED #10-1.5 X 30..... UOC:A15,H15	2
5	PAFZZ	5310011478743	7X677	3790768	WASHER,FLAT #10..... UOC:A15,H15	3
6	PAFZZ	5340012732368	19207	12341599	BRACKET,MOUNTING..... UOC:A15,H15	1
7	PAOZZ	5310012067306	7X677	11500207	WASHER,LOCK 10MM..... UOC:A15,H15	1
8	PAOZZ	5310013958747	80204	B18241B100F	NUT,PLAIN,HEXAGON #10-1.5..... UOC:A15,H15	2
9	PAOZZ	5310006379541	96906	MS35338-46	WASHER,LOCK 3/8..... UOC:A15,H15	3
10	PAOZZ	5310009359021	96906	MS51943-35	NUT,SELF-LOCKING,HE 3/8-16..... UOC:A15,H15	1
11	PAOZZ	3030012653171	34623	5598282	BELT,V 3/8 X 43.75..... UOC:A15,H15	1
12	PAFZZ	5310012046745	24617	11500324	WASHER,FLAT #10..... UOC:A15,H15	2
13	PAFZZ	5340012726634	19207	12339906	BRACKET,MOUNTING..... UOC:A15,H15	1
14	PAFFF	2530011975502	19207	12340661	COMPRESSOR,RECIPROC..... UOC:A15,H15	1
15	PAOZZ	5310007320558	96906	MS51967-8	NUT,PLAIN,HEXAGON 3/8-16..... UOC:A15,H15	2

END OF FIGURE

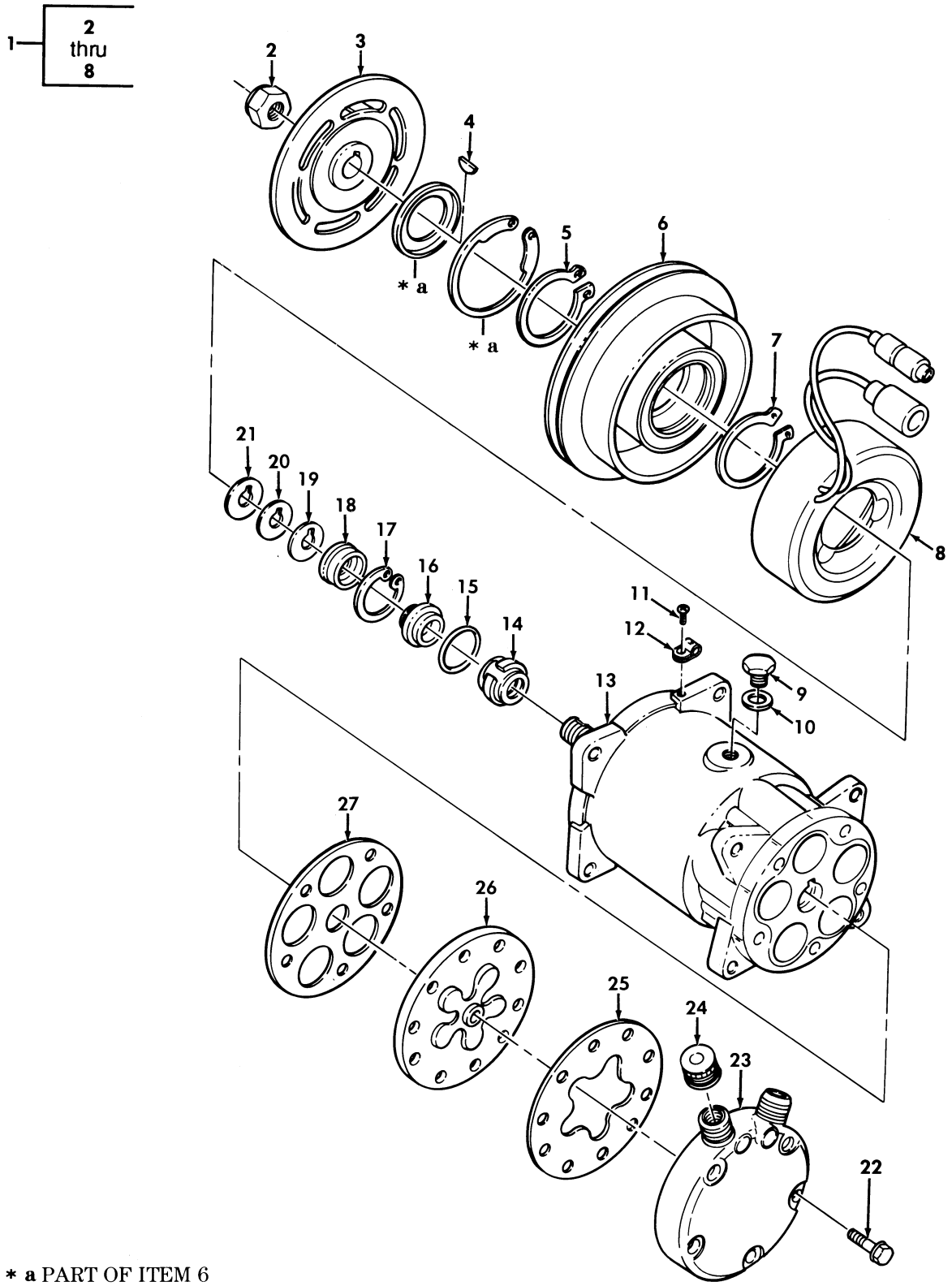

* a PART OF ITEM 6

Figure 491. Air Conditioner Compressor Assembly, M997 and M997A1 Ambulance.

(1) ITEM NO	(2) SMR CODE	(3) NSN	(4) CAGEC	(5) PART NUMBER	(6) DESCRIPTION AND USABLE ON CODES(UOC)	(7) QTY
					GROUP 5203 AIR CONDITIONING COMPONENTS	
					FIG. 491 AIR CONDITIONER COMPRESSOR ASSEMBLY,M997 AND M997A1 AMBULANCE	
1	PAFZZ	2520012899663	63829	9383-6010	CLUTCH ASSEMBLY,FRI..... UOC:A15,H15	1
2	KFFZZ		63829	XX1	.NUT PART OF KIT P/N 9103-9800..... UOC:A15,H15	1
3	KFFZZ		63829	X10	.PLATE PART OF KIT P/N 9140-9810.... UOC:A15,H15	1
4	KFFZZ		63829	9162-0121	.KEY,MACHINE PART OF KIT P/N 9103-9800..... UOC:A15,H15	1
5	KFFZZ		63829	XX6	.RING,SNAP PART OF KIT P/N 9103-9800 UOC:A15,H15	1
6	KFFZZ		63829	X11	.PULLEY PART OF KIT P/N 9140-9810... UOC:A15,H15	1
7	KFFZZ		63829	XX7	.RING,SNAP PART OF KIT P/N 9103-9800 UOC:A15,H15	1
8	PAFZZ	5950012896007	63829	8527-6041	.COIL,ELECTRICAL..... UOC:A15,H15	1
9	PAFZZ	5365012878645	63829	8385-6410	PLUG,MACHINE THREAD..... UOC:A15,H15	1
10	PAFZZ	5331012881062	63829	8385-0520	O-RING..... UOC:A15,H15	1
11	KFFZZ		63829	XX9	SCREW PART OF KIT P/N 9103-9800..... UOC:A15,H15	1
12	KFFZZ		63829	XX8	CLAMP PART OF KIT P/N 9103-9800..... UOC:A15,H15	1
13	XAFZZ		63829	X18	BODY..... UOC:A15,H15	1
14	KFFZZ		63829	X14	SEAL PART OF KIT P/N 5741908..... UOC:A15,H15	1
15	KFFZZ		63829	X15	SEAL PART OF KIT P/N 5741908..... UOC:A15,H15	1
16	KFFZZ		63829	X16	SEAL PART OF KIT P/N 5741908..... UOC:A15,H15	1
17	KFFZZ		63829	8385-0880	RING,RETAINING PART OF KIT P/N 5741908..... UOC:A15,H15	1
18	KFFZZ		63829	X17	RING,FELT PART OF KIT P/N 5741908... UOC:A15,H15	1
19	KFFZZ		63829	XX5	SHIM PART OF KIT P/N 9103-9800..... UOC:A15,H15	1
20	KFFZZ		63829	XX4	SHIM PART OF KIT P/N 9103-9800..... UOC:A15,H15	1
21	KFFZZ		63829	XX3	SHIM PART OF KIT P/N 9103-9800..... UOC:A15,H15	1
22	PAFZZ	5306012968600	63829	4605-0470	BOLT,ASSEMBLED WASH..... UOC:A15,H15	5
23	PAFZZ	2815012903705	63829	8476-9631	CYLINDER HEAD,DIESE.....	1

(1) ITEM NO	(2) SMR CODE	(3) NSN	(4) CAGEC	(5) PART NUMBER	(6) DESCRIPTION AND USABLE ON CODES(UOC)	(7) QTY
					UOC:A15,H15	
24	PAFZZ	5340012881242	63829	8363-6330	CAP,PROTECTIVE,DUST.....	2
					UOC:A15,H15	
25	KFFZZ		63829	X12	GASKET PART OF KIT P/N 8385-9611....	1
					UOC:A15,H15	
26	PAFZZ	4320012900748	63829	6320-9620	VALVE PLATE,HYDRAUL.....	1
					UOC:A15,H15	
27	KFFZZ		63829	X13	GASKET PART OF KIT P/N 8385-9611....	1
					UOC:A15,H15	

END OF FIGURE

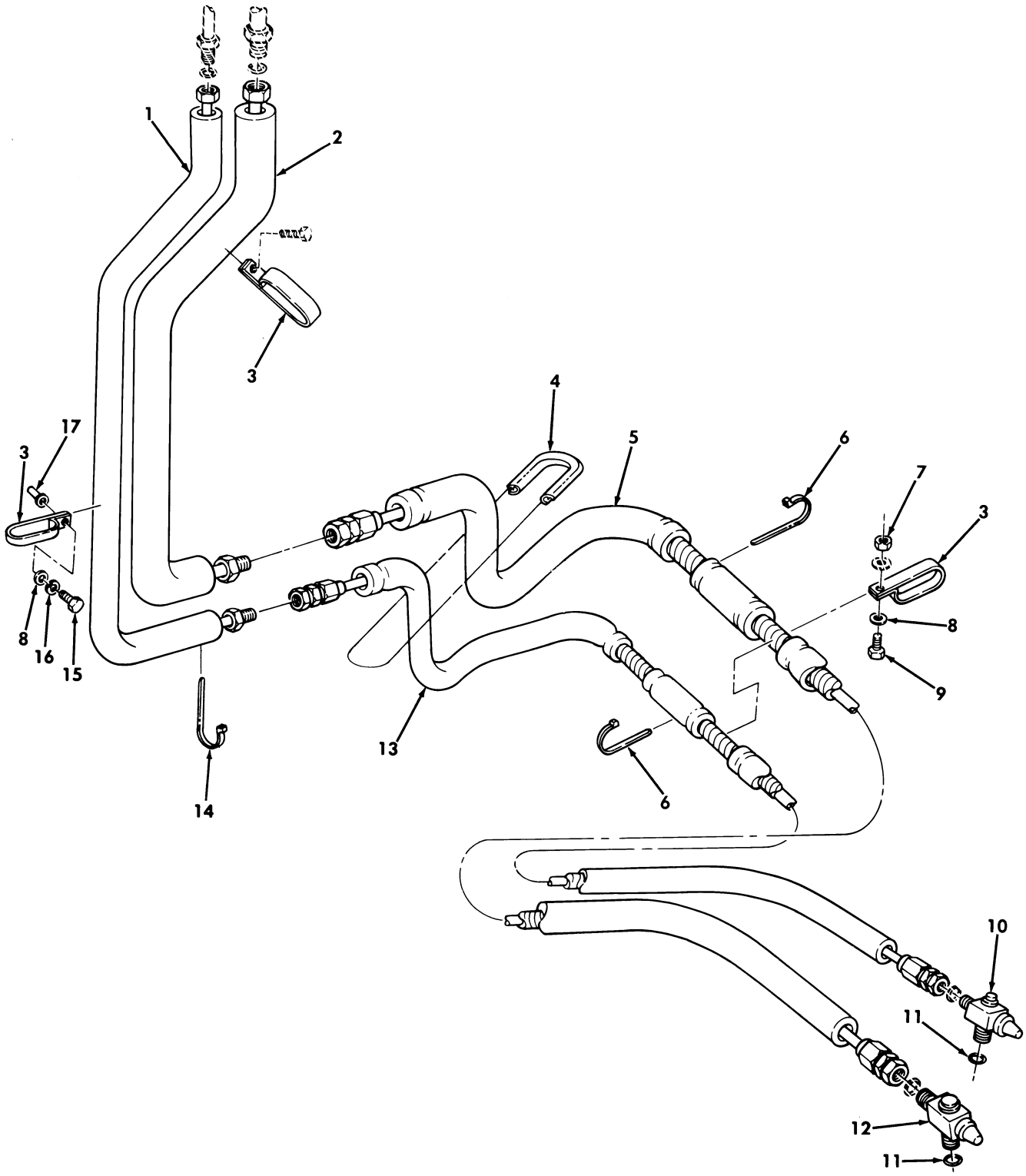

Figure 492. Air Conditioner Lines and Fittings, M997, M997A1, and M997A2 Ambulance.

(1) ITEM NO	(2) SMR CODE	(3) NSN	(4) CAGEC	(5) PART NUMBER	(6) DESCRIPTION AND USABLE ON CODES(UOC)	(7) QTY
					GROUP 5217 AIR CONDITIONING COMPONENTS	
					FIG. 492 AIR CONDITIONER LINES AND FITTINGS,M997,M997A1,AND M997A2 AMBULANCE	
1	PFFZZ	4710012653233	34623	5597935	TUBE ASSEMBLY,METAL..... UOC:A15,B15,H15	1
2	PFFZZ	4710012653232	9C234	5597929	TUBE ASSEMBLY,METAL..... UOC:A15,B15,H15	1
3	PAFZZ	5340012731721	19207	12341730	CLAMP,LOOP..... UOC:A15,B15,H15	3
13	PAOZZ	5342012728391	34623	5597872	PROTECTOR,HANDLE ED..... UOC:A15,B15,H15	1
5	PFFZZ	4720012653224	34623	12341976	HOSE ASSEMBLY,NONME..... UOC:A15,B15,H15	1
6	PAFZZ	5975001113208	96906	MS3367-5-9	STRAP,TIEDOWN,ELECT..... UOC:A15,B15,H15	2
7	PAFZZ	5310000614650	96906	MS51943-31	NUT,SELF-LOCKING,HE 1/4-20..... UOC:A15,B15,H15	1
8	PAFZZ	5310008094058	96906	MS27183-10	WASHER,FLAT 1/4..... UOC:A15,B15,H15	2
9	PAFZZ	5305000680502	96906	MS90725-6	SCREW,CAP,HEXAGON H 1/4-20 X 3/4... UOC:A15,B15,H15	1
10	PAFZZ	4820012653156	24234	404187	VALVE ASSEMBLY,DIS..... UOC:A15,B15,H15	1
11	PAFZZ	5331012658809	34623	5597916	O-RING..... UOC:A15,B15,H15	2
12	PAFZZ	4820012653159	24234	404188	VALVE ASSEMBLY,SUC..... UOC:A15,B15,H15	1
5	PFFZZ	4720012653223	9C234	5597876	HOSE ASSEMBLY,NONME..... UOC:A15,B15,H15	1
14	PAOZZ	5975010345871	96906	MS3367-7-0	STRAP,TIEDOWN,ELECT..... UOC:A15,B15,H15	3
15	PAFZZ	5305002253843	80204	B1821BH025C100N	SCREW,CAP,HEXAGON H 1/4-20 X 1.00.. UOC:A15,B15,H15	2
16	PAFZZ	5310005825965	96906	MS35338-44	WASHER,LOCK 1/4..... UOC:A15,B15,H15	2
17	PAFZZ	5310010933493	96906	MS27130-31	NUT,PLAIN,BLIND RIV 1/4-20..... UOC:A15,B15,H15	2

END OF FIGURE

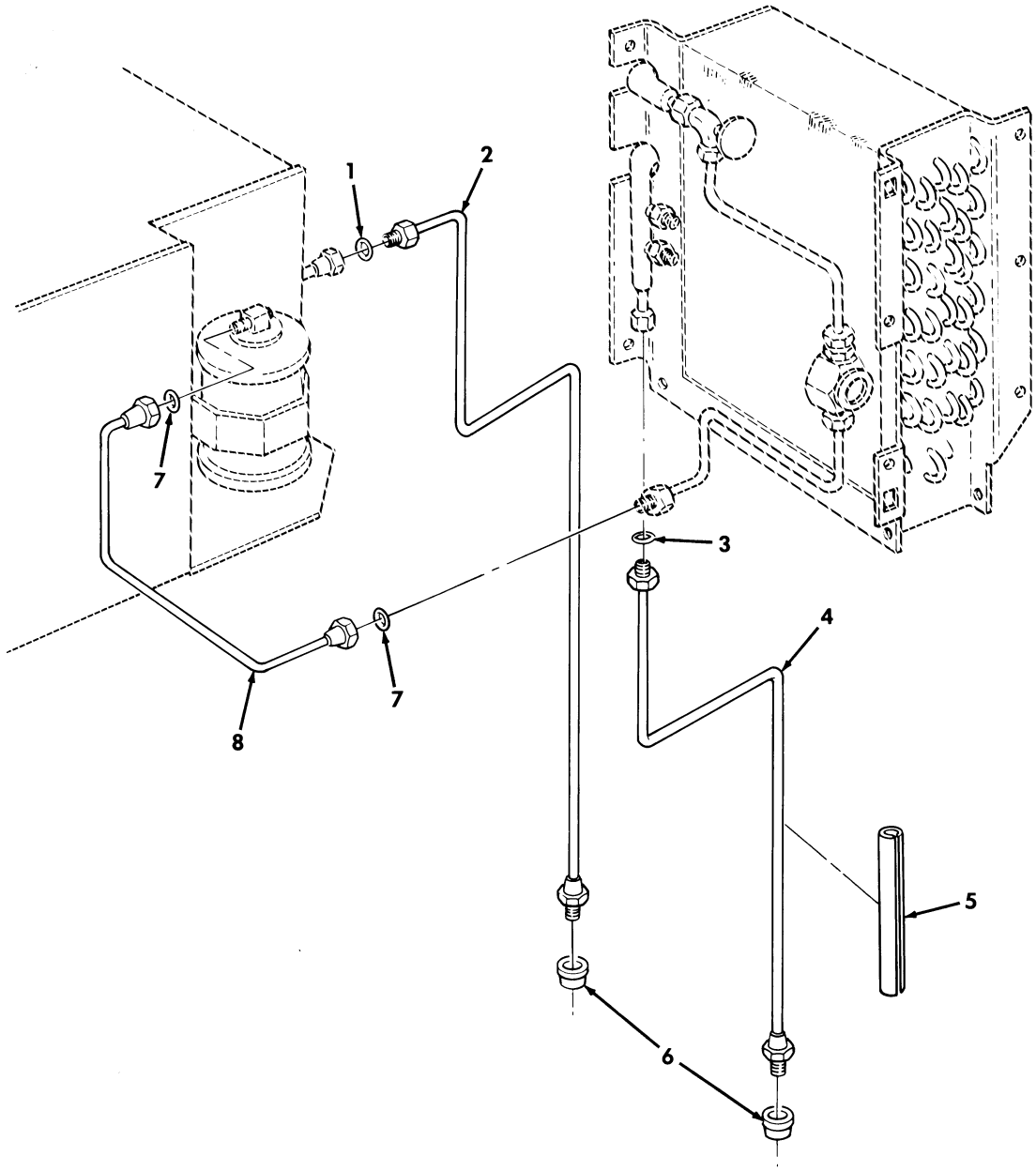

Figure 493. Air Conditioner Condenser and Evaporator Lines, M997, M997A1, and M997A2 Ambulance.

(1) ITEM NO	(2) SMR CODE	(3) NSN	(4) CAGEC	(5) PART NUMBER	(6) DESCRIPTION AND USABLE ON CODES(UOC)	(7) QTY
					GROUP 5217 AIR CONDITIONING COMPONENTS	
					FIG. 493 AIR CONDITIONER CONDENSER AND EVAPORATOR LINES,M997,M997A1, AND M997A2 AMBULANCE	
1	PAFZZ	5331011609857	24234	300442	O-RING..... UOC:A15,B15,H15	1
2	PAFZZ	4710012653277	24234	405684	TUBE AND FITTINGS,M..... UOC:A15,B15,H15	1
3	PAFZZ	5331011661712	02697	2-015C557-70	O-RING..... UOC:A15,B15,H15	1
4	PAFZZ	4710012653276	24234	405683	TUBE AND FITTINGS,M..... UOC:A15,B15,H15	1
5	PAFZZ	5640012885547	24234	300506-72.0	INSULATION SLEEVING..... UOC:A15,B15,H15	1
6	PAFZZ	5325012897859	28520	2400	GROMMET,NONMETALLIC..... UOC:A15,B15,H15	2
7	PAFZZ	5331010613000	24234	300448	O-RING..... UOC:A15,B15,H15	2
8	PAFZZ	4710012653230	24234	405682	TUBE ASSEMBLY,METAL..... UOC:A15,B15,H15	1

END OF FIGURE

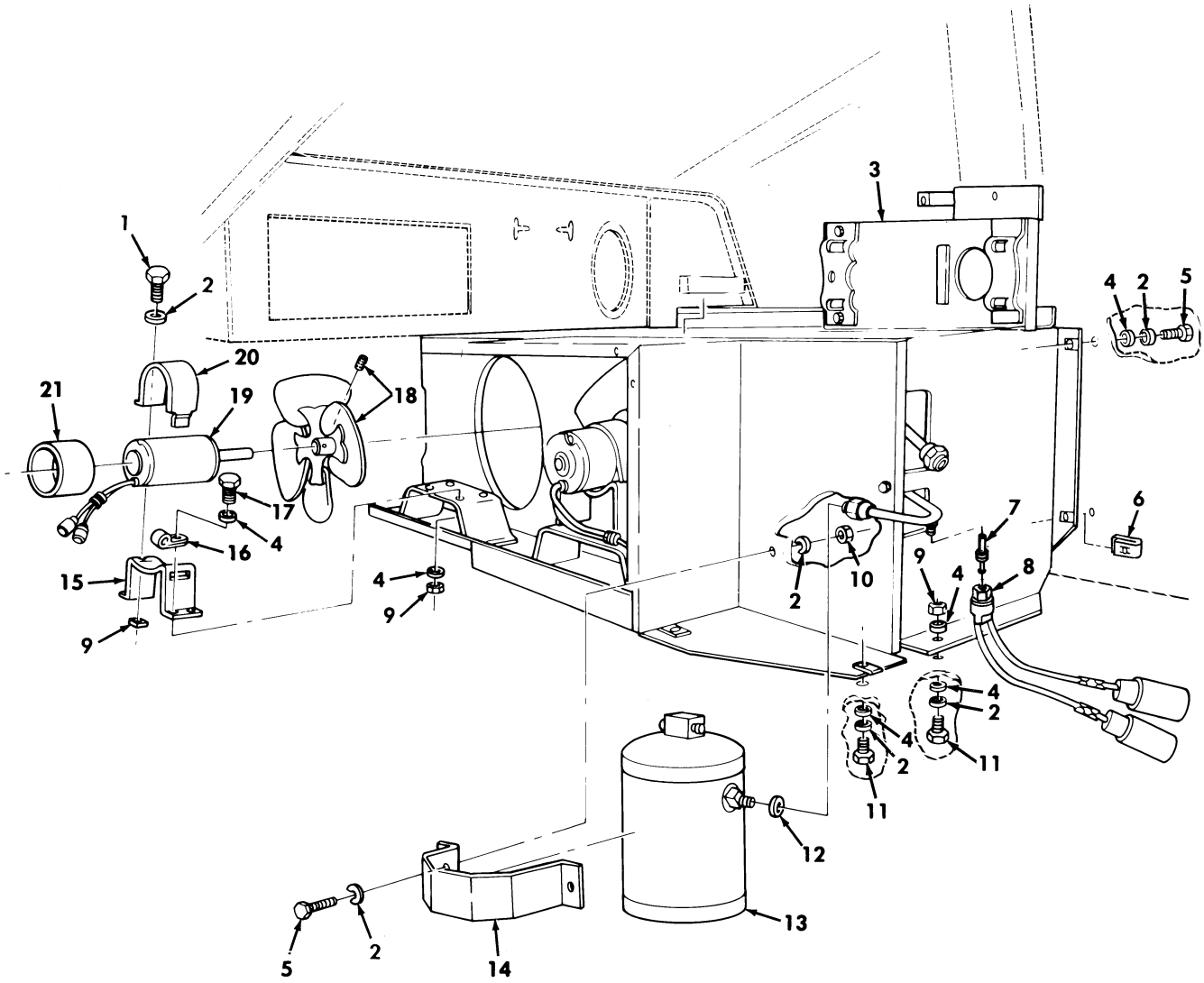

Figure 494. Heater and Air Conditioning Condenser, M997, M997A1, and M997A2 Ambulance.

(1) ITEM NO	(2) SMR CODE	(3) NSN	(4) CAGEC	(5) PART NUMBER	(6) DESCRIPTION AND USABLE ON CODES(UOC)	(7) QTY
					GROUP 5230 AIR CONDITIONING COMPONENTS	
					FIG. 494 HEATER AND AIR CONDITIONING CONDENSER,M997,M997A1,AND M997A2 AMBULANCE	
1	PAOZZ	5305012967762	24234	201686	SCREW,CAP,HEXAGON H 1/4-20 X .75... UOC:A15,B15,H15	1
2	PAOZZ	5310012702661	24234	202755	WASHER,LOCK 1/4..... UOC:A15,B15,H15	7
3	PFFZZ	4130013006350	24234	410909	CONDENSER,REFRIGERA..... UOC:A15,B15,H15	1
4	PAOZZ	5310008238804	96906	MS27183-9	WASHER,FLAT 1/4..... UOC:A15,B15,H15	10
5	PAOZZ	5305000680502	96906	MS90725-6	SCREW,CAP,HEXAGON H 1/4-20 X 3/4... UOC:A15,B15,H15	5
6	PAOZZ	5340012961736	24234	290308	CLIP,SPRING TENSION 1/4-20..... UOC:A15,B15,H15	15
7	PAFZZ	4820012653149	24234	405475	VALVE..... UOC:A15,B15,H15	1
8	PAFZZ	5930012661809	24234	404179	SWITCH,PRESSURE..... UOC:A15,H15	1
9	PAOZZ	5310012723311	34623	5741427	NUT,PLAIN,CAP 1/4-20..... UOC:A15,B15,H15	8
10	PAFZZ	5310007616882	96906	MS51967-2	NUT,PLAIN,HEXAGON 1/4-20..... UOC:A15,B15,H15	2
11	PAOZZ	5305002253843	80204	B1821BH025C100N	SCREW,CAP,HEXAGON H..... UOC:A15,B15,H15	2
12	PAFZZ	5331010613000	24234	300448	O-RING..... UOC:A15,B15,H15	1
13	PAFZZ	4130011715997	99688	585810	RECEIVER-DEHYDRATOR..... UOC:A15,H15	1
14	PAFZZ	5340012716465	24234	513395	BRACKET,MOUNTING..... UOC:A15,B15,H15	1
15	PAOZZ	5340012716466	24234	513394	BRACKET,MOUNTING..... UOC:A15,B15,H15	2
16	PAOZZ	5340012897793	24234	290309	CLAMP,LOOP..... UOC:A15,B15,H15	2
17	PAOZZ	5305012787118	24234	201685	SCREW,CAP,HEXAGON H 1/4-20 X 1-1/4. UOC:A15,B15,H15	8
18	PAOZZ	4140012697101	24234	265330	FAN,VENTILATING..... UOC:A15,B15,H15	2
19	PAOZZ	6105012658634	24234	274278	MOTOR,DIRECT CURREN..... UOC:A15,B15,H15	2
20	PAOZZ	5340012716455	24234	513396	STRAP,WEBBING..... UOC:A15,B15,H15	2
21	PAOZZ	9320010852889	99688	58701	RUBBER ROUND SECTIO..... UOC:A15,B15,H15	2

END OF FIGURE

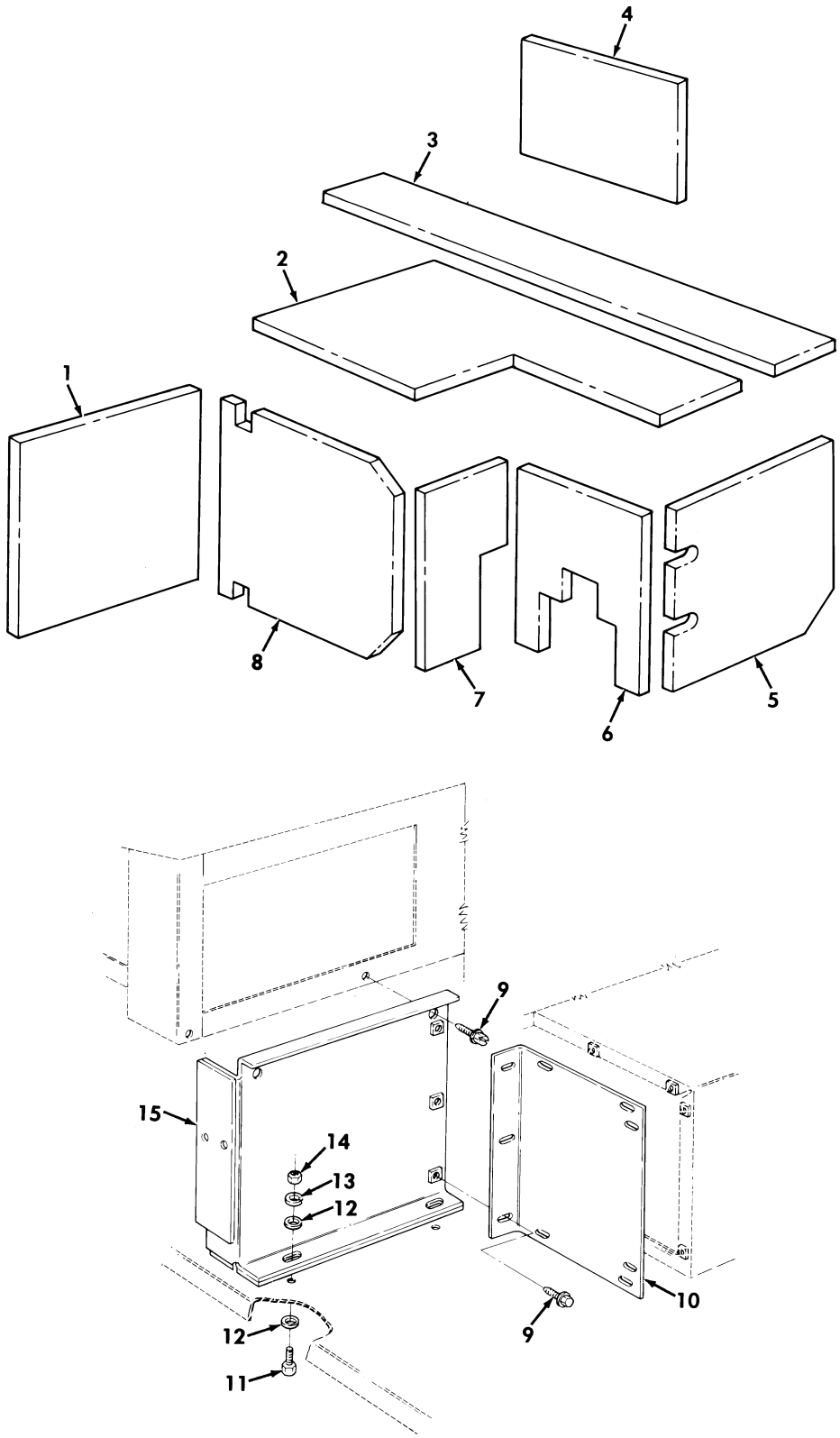

Figure 495. Heater and Air Conditioning Condenser, M997, M997A1, and M997A2 Ambulance.

(1) ITEM NO	(2) SMR CODE	(3) NSN	(4) CAGEC	(5) PART NUMBER	(6) DESCRIPTION AND USABLE ON CODES(UOC)	(7) QTY
					GROUP 5230 AIR CONDITIONING COMPONENTS	
					FIG. 495 HEATER AND AIR CONDITIONING CONDENSER,M997,M997A1,AND M997A2 AMBULANCE	
1	MOOZZ		34623	SF5598816	PANEL FRONT CLOSE OUT,MAKE FROM PAD,CUSHIONING P/N CF40BH52..... UOC:A15,B15,H15	1
2	MOOZZ		34623	SF5598242	PANEL CONDENSER,TOP,MAKE FROM PAD, CUSHIONING P/N CF40BH52..... UOC:A15,B15,H15	1
3	MOOZZ		19207	12341680	INSULATION BLANKET, CONDENSOR,TOP OUTER,MAKE FROM PAD CUSHIONING P/N CF40BH52..... UOC:A15,B15,H15	1
4	MOOZZ		34623	SF5598821	PANEL HEATER SIDE,MAKE FROM PAD, CUSHIONING P/N CF40BH52..... UOC:A15,B15,H15	1
5	MOOZZ		34623	SF5598239	PANEL CONDENSER,REAR,MAKE FROM PAD, CUSHIONING P/N CF40BH52..... UOC:A15,B15,H15	1
6	MOOZZ		34623	SF5598240	PANEL CONDENSER,SIDE,MAKE FROM PAD, CUSHIONING P/N CF40BH52..... UOC:A15,B15,H15	1
7	MOOZZ		34623	SF5598815	PANEL CONDENSER REAR,MAKE FROM PAD, CUSHIONING P/N CF40BH52..... UOC:A15,B15,H15	1
8	MOOZZ		34623	SF5598243	PANEL CONDENSER CLOSE OUT PANEL, MAKE FROM PAD,CUSHIONING P/N CF40BH52..... UOC:A15,B15,H15	1
9	PAOZZ	5305012645874	19207	12340792	SCREW,TAPPING #10-12 X .75..... UOC:A15,B15,H15	11
10	PAOZZ	4130012789837	34623	5934219	COVER,AIR CONDITION..... UOC:A15,B15,H15	1
11	PAOZZ	5305000680502	96906	MS90725-6	SCREW,CAP,HEXAGON H 1/4-20 X 3/4... UOC:A15,B15,H15	5
12	PAOZZ	5310008238804	96906	MS27183-9	WASHER,FLAT 1/4..... UOC:A15,B15,H15	10
13	PAOZZ	5310012702661	24234	202755	WASHER,LOCK..... UOC:A15,B15,H15	7
14	PAOZZ	5310007616882	96906	MS51967-2	NUT,PLAIN,HEXAGON 1/4-20..... UOC:A15,B15,H15	2
15	PAOZZ	4420012765050	24234	410925	BAFFLE,FLUID COOLER FRONT..... UOC:A15,B15,H15	1

END OF FIGURE

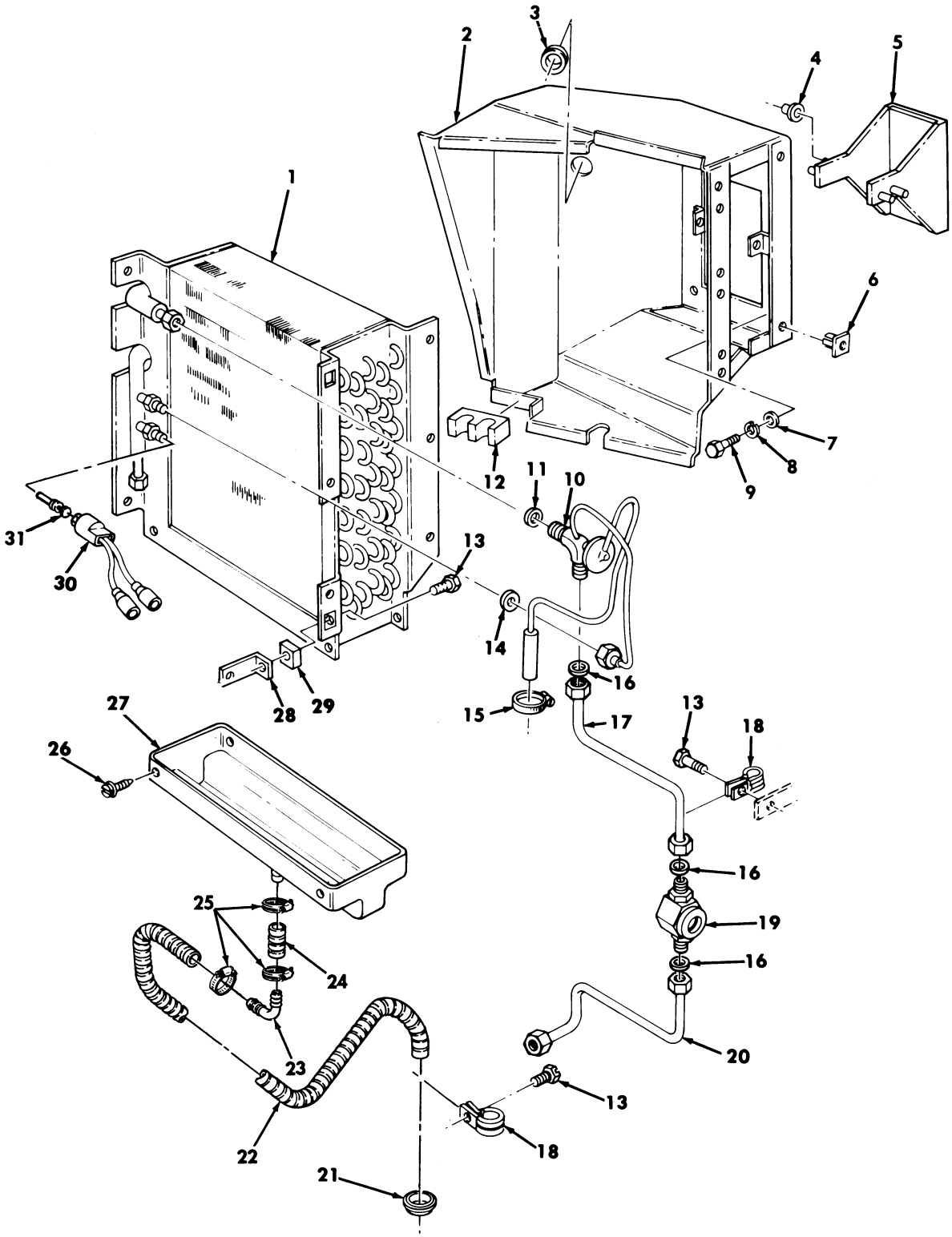

Figure 496. Air Conditioning Evaporator and Mounting Hardware, M997, M997A1, and M997A2 Ambulance

(1) ITEM NO	(2) SMR CODE	(3) NSN	(4) CAGEC	(5) PART NUMBER	(6) DESCRIPTION AND USABLE ON CODES(UOC)	(7) QTY
					GROUP 5241 AIR CONDITIONING COMPONENTS	
					FIG. 496 AIR CONDITIONING EVAPORATOR AND MOUNTING HARDWARE,M997,M997A1, AND M997A2 AMBULANCE	
1	PAFZZ	4130012658726	24234	400084	EVAPORATOR COIL,REF..... UOC:A15,H15	1
2	PFFZZ	4130012821895	24234	410917	EVAPORATOR,AIR COND..... UOC:A15,B15,H15	1
3	PAFZZ	5325002636648	96906	MS35489-135	GROMMET,NONMETALLIC..... UOC:A15,B15,H15	1
4	PAFZZ	3120012702646	24234	204434	BUSHING,SLEEVE..... UOC:A15,B15,H15	2
5	PFFZZ	5340012817795	24234	410918	COVER,ACCESS..... UOC:A15,B15,H15	1
6	PAFZZ	5310012723311	34623	5741427	NUT,PLAIN,CAP 1/4-20..... UOC:A15,B15,H15	5
7	PAFZZ	5310008238804	96906	MS27183-9	WASHER,FLAT 1/4..... UOC:A15,B15,H15	6
8	PAFZZ	5310012702661	24234	202755	WASHER,LOCK 1/4..... UOC:A15,B15,H15	6
9	PAFZZ	5305000680502	96906	MS90725-6	SCREW,CAP,HEXAGON H 1/4-20 X 3/4... UOC:A15,B15,H15	6
10	PFFZZ	4820011616435	99688	58583	VALVE,EXPANSION..... UOC:A15,H15	1
11	PAFZZ	5331011609857	24234	300442	O-RING..... UOC:A15,B15,H15	1
12	PFFZZ	5330012822214	24234	354944	SEAL,NONMETALLIC ST LOWER RIGHT.... UOC:A15,B15,H15	1
13	PAOZZ	5305000712506	80204	B1821BH025C050N	SCREW,CAP,HEXAGON H 1/4-20 X 1/2... UOC:A15,B15,H15	5
14	PAFZZ	5331001850075	28527	B2099690G1	O-RING..... UOC:A15,B15,H15	1
15	PAFZZ	4730009083193	7Z588	30024H	CLAMP,HOSE..... UOC:A15,B15,H15	1
16	PAFZZ	5331010613000	24234	300448	O-RING..... UOC:A15,B15,H15	3
17	PAFZZ	4710012653152	24234	405680	TUBE UPPER..... UOC:A15,H15	1
18	PAFZZ	5340012766738	24234	290249	CLAMP,LOOP..... UOC:A15,B15,H15	3
19	PAFZZ	6680012658698	24234	405565	INDICATOR,SIGHT,LIQ..... UOC:A15,H15	1
20	PFFZZ	4710012855123	24234	405681	TUBE ASSEMBLY,METAL LOWER..... UOC:A15,H15	1
21	PFFZZ	5325002766090	96906	MS35489-18	GROMMET,NONMETALLIC..... UOC:A15,B15,H15	1
22	PFOZZ	4720012820143	24234	300515	HOSE,NONMETALLIC .82 INCHES LONG... UOC:A15,B15,H15	1
23	PFOZZ	4730014392814	34623	12342655	ELBOW,HOSE..... UOC:A15,B15,H15	1

(1) ITEM NO	(2) SMR CODE	(3) NSN	(4) CAGEC	(5) PART NUMBER	(6) DESCRIPTION AND USABLE ON CODES(UOC)	(7) QTY
24	PFOZZ	4720012820160	24234	405695	HOSE ASSEMBLY,DRAIN..... UOC:A15,B15,H15	1
25	PAOZZ	4730002302959	24234	290227	CLAMP,HOSE..... UOC:A15,B15,H15	3
26	PAOZZ	5305012705419	24234	200335	SCREW,TAPPING,THREA..... UOC:A15,B15,H15	4
27	PAFZZ	4130012694921	24234	410920	PAN,TRUCK..... UOC:A15,B15,H15	1
28	PFOZZ	5340012716467	24234	513438	BRACKET,MOUNTING..... UOC:A15,B15,H15	2
29	XBOZZ		24234	204531	SPACER,SLEEVE..... UOC:A15,B15,H15	2
30	PAFZZ	5930012663917	24234	404180	SWITCH,PRESSURE..... UOC:A15,B15,H15	1
31	PAFZZ	4820012653149	24234	405475	VALVE..... UOC:A15,B15,H15	1

END OF FIGURE

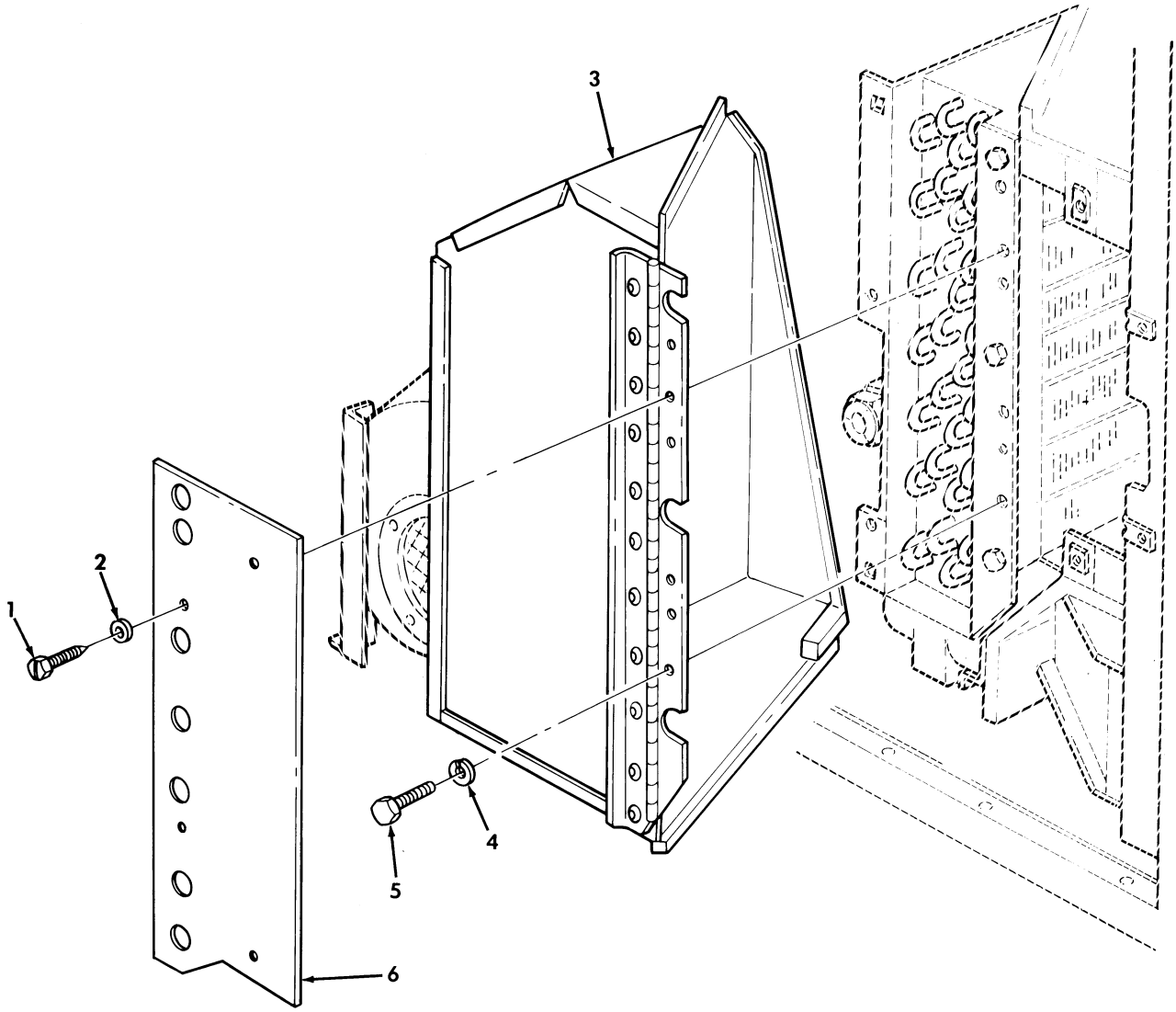

Figure 497. Evaporator Blower Motor Assembly Covers, M997, M997A1, and M997A2 Ambulance.

(1) ITEM NO	(2) SMR CODE	(3) NSN	(4) CAGEC	(5) PART NUMBER	(6) DESCRIPTION AND USABLE ON CODES(UOC)	(7) QTY
					GROUP 5243 AIR CONDITIONING	
					FIG. 497 EVAPORATOR BLOWER MOTOR ASSEMBLY COVERS,M997,M997A1,AND M997A2 AMBULANCE	
1	PAOZZ	5305012542460	34623	5592840	SCREW,TAPPING,THREA #10-16 X 1/2... UOC:A15,B15,H15	4
2	PAOZZ	5310002748710	24234	202751	WASHER,LOCK #10..... UOC:A15,B15,H15	4
3	PAOZZ	5340014395636	34623	5598293	COVER,ACCESS..... UOC:A15,B15,H15	1
4	PAOZZ	5310008094058	96906	MS27183-10	WASHER,FLAT 1/4..... UOC:A15,B15,H15	6
5	PAOZZ	5305000680502	96906	MS90725-6	SCREW,CAP,HEXAGON H 1/4-20 X 3/4... UOC:A15,B15,H15	6
6	XBOZZ		34623	5598307	COVER PLATE..... UOC:A15,B15,H15	1

END OF FIGURE

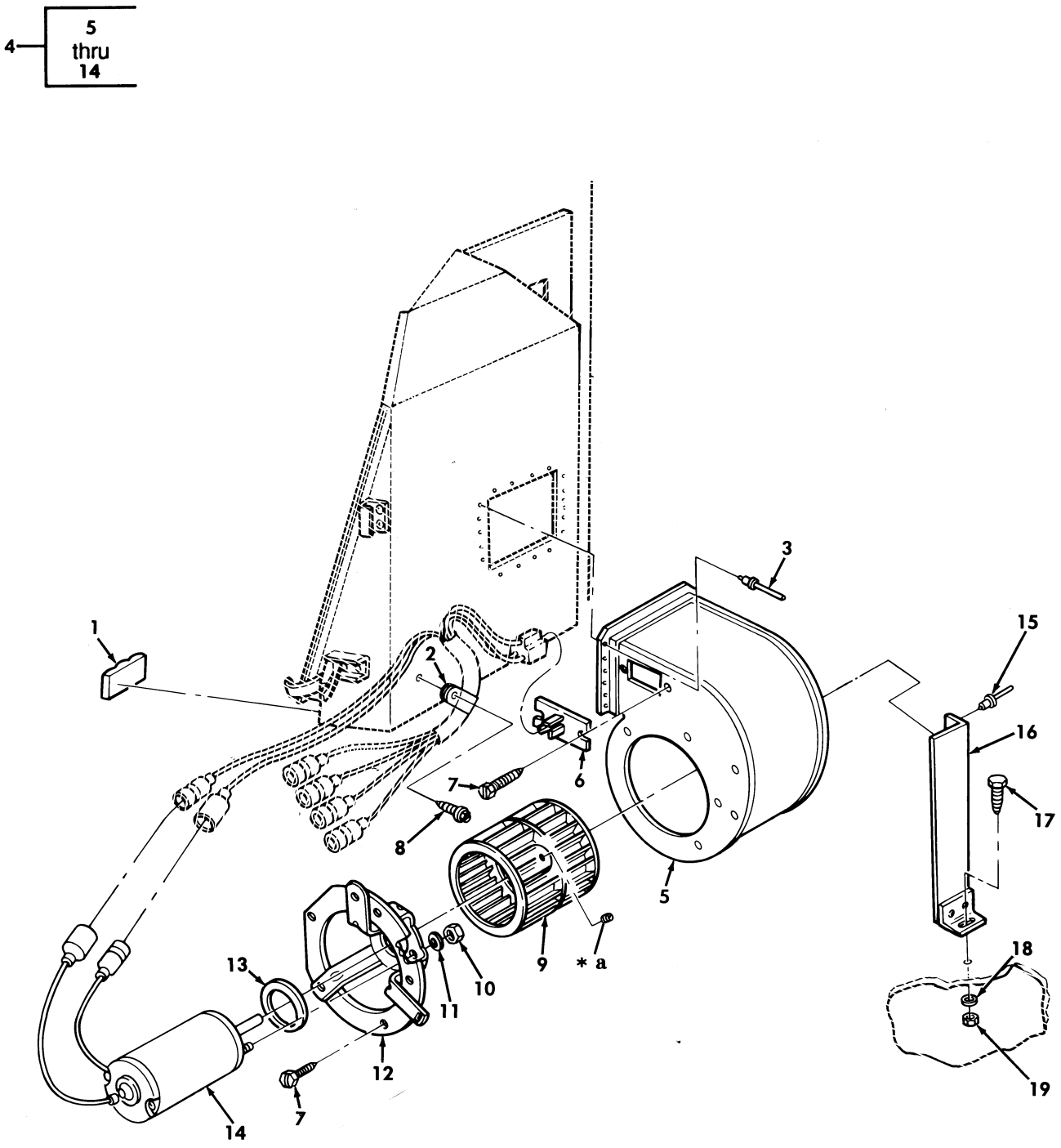

* a PART OF ITEM 9

Figure 498. Evaporator Blower Motor Assembly, M997, M997A1, and M997A2 Ambulance.

(1) ITEM NO	(2) SMR CODE	(3) NSN	(4) CAGEC	(5) PART NUMBER	(6) DESCRIPTION AND USABLE ON CODES(UOC)	(7) QTY
					GROUP 5243 AIR CONDITIONING	
					FIG. 498 EVAPORATOR BLOWER MOTOR ASSEMBLY,M997,M997A1,AND M997A2 AMBULANCE	
1	PFOZZ	5330012822214	24234	354944	SEAL,NONMETALLIC ST..... UOC:A15,B15,H15	1
2	PAOZZ	5340012820469	24234	290101	CLIP,SPRING TENSION..... UOC:A15,B15,H15	1
3	PAOZZ	5320001196823	80205	MS20470B4-4	RIVET,SOLID..... UOC:A15,B15,H15	18
4	PFOOO	2540012856066	24234	410921	BLOWER ASSEMBLY,AIR..... UOC:A15,B15,H15	1
5	XAOZZ		24234	513450	.HOUSING BLOWER..... UOC:A15,B15,H15	1
6	PAOZZ	5905011542354	99688	65158	.RESISTOR ASSEMBLY..... UOC:A15,B15,H15	1
7	PAOZZ	5305012705419	24234	200335	.SCREW,TAPPING,THREA #10-16 X 1/2.. UOC:A15,B15,H15	7
8	PAOZZ	5305000680508	80204	B1821BH025C075N	.SCREW,CAP,HEXAGON H 1/4-20 X 3/4.. UOC:A15,B15,H15	1
9	PFOZZ	2930012822524	24234	260790	.HUB,FAN CLUTCH..... UOC:A15,B15,H15	1
10	PAOZZ	5310008528593	96906	MS35649-103	.NUT,PLAIN,HEXAGON #10-32..... UOC:A15,B15,H15	2
11	PAOZZ	5310002748710	24234	202751	.WASHER,LOCK #10..... UOC:A15,B15,H15	2
12	PFOZZ	5340012817798	24234	513431	.BRACKET,MOUNTING..... UOC:A15,B15,H15	1
13	PFOZZ	5330012822208	24234	354674	.GASKET..... UOC:A15,B15,H15	1
14	PAOZZ	6105012658634	24234	274278	.MOTOR,DIRECT CURREN..... UOC:A15,B15,H15	1
15	PAOZZ	5320008658994	81349	M24243/1-D404	RIVET,BLIND..... UOC:A15,B15,H15	2
16	PAOZZ	5340012893228	24234	514277	BRACKET,ANGLE..... UOC:A15,B15,H15	1
17	PAOZZ	5305000680502	96906	MS90725-6	SCREW,CAP,HEXAGON H 1/4-20 X .75... UOC:A15,B15,H15	1
18	PAOZZ	5310005825965	96906	MS35338-44	WASHER,LOCK 1/4..... UOC:A15,B15,H15	1
19	PAOZZ	4931012028692	19207	12339998-13	PLUSNUT 1/4-20..... UOC:A15,B15,H15	1

END OF FIGURE

(1) ITEM NO	(2) SMR CODE	(3) NSN	(4) CAGEC	(5) PART NUMBER	(6) DESCRIPTION AND USABLE ON CODES(UOC)	(7) QTY
					GROUP 94 KITS	
					9401 SERVICE KITS	
					FIG. KITS	
1	PAFZZ	2920012058605	68505	AMA-1046AS	PARTS KIT,ENGINE GE POSITIVE HEAT..	1
					UOC:A11,A13,A14,A20,A24,A25,A26,A27, B17,B18,H11,H13,H14,H17,H18,H20,H21, H24,H25,H26,H27,H28,MMM	
					INSULATOR,PLATE (1) 43-28	
					RECTIFIER,HEAT (1) 43-29	
2	PAFZZ	2920000095213	19728	AMA-19S	PARTS KIT,BRUSH SPR ALTERNATOR.....	1
					UOC:A11,A13,A14,A20,A24,A25,A26,A27, B17,B18,H11,H13,H14,H17,H18,H20,H21, H24,H25,H26,H27,H28,MMM	
					SPRING (2) 43-43	
3	PAOZZ	2910012184489	53964	A630003	PARTS KIT,FILTER.....	1
					BOLT (3) 19-3	
					WASHER (3) 19-4	
4	PAOZZ	2530012063874	33116	A98-09439	PARTS KIT,HAND BRAK.....	1
					UOC:H11,H13,H14,H17,H18,H24,H25,H26, H27,MMM	
					DISC,BRAKE (2) 156-8	
					SPRING,HELICAL,EXTE(2) 156-4	
5	PAOZZ	4330011903579	53964	A910044	FILTER ELEMENT,FLUI.....	1
					FILTER ELEMENT,FLUI(1) 19-7	
					O-RING (1) 19-8	
6	PAFZZ	4520002013474	78385	G704424	BURNER ASSEMBLY SPACE HEATER.....	1
					UOC:A15,B15,H15	
					BOLT,HOOK (2) 348-22	
					BURNER ASSEMBLY (1) 348-35	
					CLAMP,RIM CLENCHING(4) 348-23	
					GASKET (1) 348-20	
					O-RING (1) 348-21	
					NUT,PLAIN,HEXAGON (4) 348-3	
7	PAFZZ	4520012847099	78385	G706055	BURNER ASSEMBLY SPACE HEATER.....	1
					UOC:A15,B15,H15	
					BOLT,HOOK (2) 348-22	
					BURNER ASSEMBLY (1) 348-35	
					CLAMP,RIM CLENCHING(4) 348-23	
					GASKET (1) 348-20	
					O-RING (1) 348-21	
8	PAFZZ	5977011894988	24975	MFJ-2012BS	BRUSH SET,ELECTRICA STARTER MOTOR..	1
					BRUSH STARTER MOTOR(4) 45-46	
9	PAFZZ	5360011907234	68505	MFY-19S	SPRING SET GENERATOR.....	1
					SPRING BRUSH (4) 45-48	
10	PAFZZ	2530014208025	34623	RCSK17215	BRAKE SHOE SET.....	1
					UOC:AVY,A11,A13,A14,A15,A20,A24,A25, A26,A27,B16,B17,B18,HVY,H11,H13,H14, H15,H16,H17,H18,H20,H21,H24,H25,H26, H27,H28,MMM	
					DISK,BRAKE SHOE (4) 157-16	
					DISK,BRAKE SHOE (4) 158-11	

(1) ITEM NO	(2) SMR CODE	(3) NSN	(4) CAGEC	(5) PART NUMBER	(6) DESCRIPTION AND USABLE ON CODES(UOC)	(7) QTY
11	PAFZZ	2920011924474	68505	SAT-1004FS	PARTS KIT,ENGINE GE GENERATOR.....	1
					COVER AND CONTACT (1) 45-31	
					GASKET (1) 45-32	
12	PAFZZ	5977000083338	76468	01-05479	BRUSH SET,ELECTRICA.....	1
					UOC:A11,A13,A14,A20,A24,A25,A26,A27, B17,B18,H11,H13,H14,H17,H18,H20,H21, H24,H25,H26,H27,H28,MMM	
					BRUSH (2) 43-44	
13	PAOZZ	2520007227074	81221	1-0153	PARTS KIT,UNIVERSAL.....	1
					UOC:H11,H13,H14,H15,H16,H17,H18,H20, H21,H24,H25,H26,H27,H28,MMM	
					BEARING RACE (4) 136-7	
					BEARING RACE (4) 136-20	
					CROSS ASSEMBLY (1) 136-8	
					CROSS ASSEMBLY (1) 136-21	
					RING,RETAINING (4) 136-10	
					RING,RETAINING (4) 136-23	
14	PAFZZ	2530011797511	34281	11021	PARTS KIT,BRAKE CAL SERVICE BRAKE..	1
					BOOT,DUST,MOIST (1) 158-10	
					GASKET (1) 158-8	
15	KFOZZ	4330011216350	11862	12337210	PARTS KIT,FLUID PRE OIL FILTER.....	1
					UOC:AVY,A11,A13,A14,A15,A20,A24,A25, A26,A27,B16,B17,B18,HVY,H11,H13,H14, H15,H16,H17,H18,H20,H21,H24,H25,H26, H27,H28,MMM	
					GASKET (1) 104-7	
					PARTS KIT,FLUID PRE(1) 104-6	
					SEAL (1) 104-15	
16	PAOZZ	2530014599492	62828	2390077	PARTS KIT,AXLE,VEHI.....	1
					UOC:BVY,B15,B20,B24,B25,C17,NNN	
					INSERT (1) 139-11	
					INSERT (1) 146-11	
					JOINT,PLUNGE (1) 139-12	
					JOINT,PLUNGE (1) 146-12	
					RING,RETAINING (2) 139-6	
					RING,SPACER (2) 139-5	
					RING,SPACER (2) 146-5	
					SPIDER ASSEMBLY (1) 139-10	
					SPIDER ASSEMBLY (1) 146-10	
17	PAHZZ	3010014608309	7X677	24200130	CARRIER,GEAR ASSEMB.....	1
					UOC:BVY,B15,B20,B24,B25,C17,NNN	
					SHAFT ASSEMBLY (1) 115-2	
18	PAHZZ	4820014748911	7X677	24200418	PARTS KIT,PRESSURE.....	1
					UOC:BVY,B15,B20,B24,B25,C17,NNN	
					PIN (1) 117-1	
					PISTON (1) 117-4	
					SEAL RING,METAL (1) 117-3	
					WASHER,SLOTTED (1) 117-2	
19	PAHZZ	2520014595454	7X677	24200789	PARTS KIT,TRANSMISS.....	1
					UOC:BVY,B15,B20,B24,B25,C17,NNN	
					HOUSING,FRICTION CL(1) 115-24	
20	PAHZZ	5330014107229	7X677	24202111	PARTS KIT,SEAL REPL.....	1
					UOC:BVY,B15,B20,B24,B25,C17,NNN	

(1) ITEM NO	(2) SMR CODE	(3) NSN	(4) CAGEC	(5) PART NUMBER	(6) DESCRIPTION AND USABLE ON CODES(UOC)	(7) QTY
					BOLT,MACHINE (7) 122-1	
					FILTER,FORCE FEED (1) 119-1	
					GASKET (1) 108-7	
					GASKET (1) 116-10	
					GASKET (1) 117-15	
					GASKET (1) 117-18	
					GASKET (1) 120-8	
					GASKET (1) 120-10	
					GASKET (1) 120-25	
					GASKET (1) 122-30	
					PARTS KIT,HYDRAULIC(1) 105-15	
					SEAL,PLAIN (1) 122-4	
					SEAL,PLAIN,ENCASED (1) 105-14	
21	PAHZZ		7X677	24204278	PAN KIT,A/TRANS FLU 1997,98.....	1
					UOC:BVY,B15,B20,B24,B25,C17,NNN	
					GASKET (1) 105-20	
					MAGNET,CLIP,COLLECT(1) 105-16	
					PAN,TRANSMISSION (1) 105-18	
					PLUG,DRAIN (1) 105-21	
22	PAHZZ	5330013983724	7X677	24204441	KIT,TRANSMISSION.....	1
					UOC:BVY,B15,B20,B24,B25,C17,NNN	
					BOLT,MACHINE (1) 105-12	
					BOLT,MACHINE (1) 105-13	
					BOLT,MACHINE (7) 122-1	
					DISC,CLUTCH (5) 110-3	
					DISK,CLUTCH (5) 112-16	
					DISK,CLUTCH (4) 114-8	
					DISK,CLUTCH (3) 115-18	
					DISK,CLUTCH (4) 115-20	
					FILTER,FORCE FEED (1) 119-1	
					GASKET (1) 108-7	
					GASKET (1) 117-18	
					GASKET (1) 117-15	
					GASKET (1) 120-8	
					GASKET (1) 120-10	
					GASKET (1) 120-25	
					O-RING (1) 115-22	
					O-RING (1) 115-26	
					O-RING (2) 122-32	
					PACKING,PREFORMED (1) 114-13	
					PACKING,PREFORMED (1) 114-14	
					PARTS KIT,HYDRAULIC(1) 105-15	
					RETAINER,PACKING (4) 114-15	
					RING,SEAL,METAL (1) 117-3	
					SEAL,DIRECT,CLUTCH (1) 110-5	
					SEAL,INNER (1) 112-4	
					SEAL,INNER (1) 112-5	
					SEAL,OUTER (1) 112-6	
					SEAL,PISTIN,INNER (1) 110-7	
					SEAL,PISTON,OUTER (1) 110-6	
					SEAL,PLAIN (1) 105-7	
					SEAL,PLAIN (2) 115-4	
					SEAL,PLAIN (1) 122-4	

(1) ITEM NO	(2) SMR CODE	(3) NSN	(4) CAGEC	(5) PART NUMBER	(6) DESCRIPTION AND USABLE ON CODES(UOC)	(7) QTY
					SEAL,PLAIN,ENCASED (1) 105-14	
					SEAL,PLAIN,ENCASED (2) 115-1	
23	PAHZZ		7X677	24204449	PARTS KIT,PISTON.....	1
					UOC:BVY,B15,B20,B24,B25,C17,NNN	
					PACKING,PREFORMED (1) 114-13	
					PACKING,PREFORMED (1) 114-14	
24	PAFZZ	1005000499324	7X677	24204472	VERNIER ASSEMBLY.....	1
					UOC:BVY,B15,B20,B24,B25,C17,NNN	
					LEVER,REMOTE (1) 108-5	
					SHAFT (1) 108-6	
25	PAHZZ	3040014621286	7X677	24205250	PISTON,LINEAR ACTUA 1996,97,98.....	1
					UOC:BVY,B15,B20,B24,B25,C17,NNN	
					PISTON (1) 117-12	
					RING,OIL SEAL (1) 117-11	
					RING,OIL SEAL (1) 117-14	
26	PAHZZ	5330014422874	7X677	24205251	PARTS KIT,SEAL REPL 1995,96.....	1
					UOC:BVY,B15,B20,B24,B25,C17,NNN	
					BOLT,MACHINE (1) 105-12	
					BOLT,MACHINE (1) 105-13	
					BOLT,MACHINE (7) 122-1	
					DISK,CLUTCH (6) 109-3	
					DISK,CLUTCH (5) 110-3	
					DISK,CLUTCH (5) 112-16	
					DISK,CLUTCH (1) 114-8	
					DISK,CLUTCH (3) 115-18	
					DISK,CLUTCH (4) 115-20	
					FILTER,ELEMENT (1) 119-1	
					GASKET (1) 108-7	
					GASKET (1) 116-10	
					GASKET (1) 117-15	
					GASKET (1) 117-18	
					GASKET (1) 120-8	
					GASKET (1) 120-25	
					GASKET (1) 122-30	
					O-RING (1) 115-22	
					O-RING (1) 115-26	
					O-RING (2) 122-32	
					PACKING,PREFORMED (1) 114-13	
					PACKING,PREFORMED (1) 114-14	
					PARTS KIT,HYDRAULIC(1) 105-15	
					RETAINER,PACKING (4) 114-15	
					SEAL,DIRECT,CLUTCH (1) 110-5	
					SEAL,INNER (1) 112-4	
					SEAL,INNER (1) 112-5	
					SEAL,OUTER (1) 112-6	
					SEAL,PISTON,INNER (1) 110-7	
					SEAL,PISTON,OUTER (1) 110-6	
					SEAL,PLAIN (1) 105-7	
					SEAL,PLAIN (2) 115-4	
					SEAL,PLAIN,ENCASED (1) 105-14	
					SEAL,PLAIN,ENCASED (2) 115-1	
					SEAL,RING,METAL (1) 116-1	
					SEAL,RING,METAL (1) 117-3	

(1) ITEM NO	(2) SMR CODE	(3) NSN	(4) CAGEC	(5) PART NUMBER	(6) DESCRIPTION AND USABLE ON CODES(UOC)	(7) QTY
27	PAHZZ	2520014608301	7X677	24205348	PARTS KIT,MECHANICAL 1996.....	1
					UOC:BVY,B15,B20,B24,B25,C17,NNN	
					BEARING,CLUTCH (1) 114-12	
					SUPPORT (1) 114-17	
28	PAHZZ	2520011497861	7X677	24205551	CARRIER ASSEMBLY,TR 1995,96.....	1
					UOC:BVY,B15,B20,B24,B25,C17,NNN	
					CARRIER ASSEMBLY (1) 107-9	
					ROLLER ASSEMBLY (1) 107-2	
29	PAHZZ	2520014747051	7X677	24205552	TRANSMISSION,HYDRAU 1997,98.....	1
					UOC:BVY,B15,B20,B24,B25,C17,NNN	
					CARRIER ASSEMBLY (1) 107-9	
					ROLLER ASSEMBLY (1) 107-2	
30	PAHZZ	5340014088525	7X677	24206749	SEAT,HELICAL COMPRE.....	1
					UOC:BVY,B15,B20,B24,B25,C17,NNN	
					PACKING,PREFORMED (1) 120-4	
					PACKING,PREFORMED (2) 120-6	
					PIN,STRAIGHT,HEADLE(1) 120-24	
					PISTON (1) 120-23	
					RING,RETAINING (2) 120-2	
31	PAHZZ		7X677	24208848	RACE BEARING 1997,98.....	1
					UOC:BVY,B15,B20,B24,B25,C17,NNN	
					BEARING,NEEDLE (1) 107-11	
					RACE,BEARING (1) 107-10	
					RACE,BEARING (1) 107-12	
32	PAHZZ		7X677	24208849	PARTS KIT,CLUTCH 1997,98.....	1
					UOC:BVY,B15,B20,B24,B25,C17,NNN	
					BEARING,CLUTCH (1) 114-12	
					SUPPORT (1) 114-17	
33	PAHZZ		7X677	24210954	PARTS KIT,TRANSMISS 1997,98.....	1
					UOC:BVY,B15,B20,B24,B25,C17,NNN	
					BOLT,MACHINE (7) 122-1	
					DISK,CLUTCH (5) 110-3	
					DISK,CLUTCH (5) 112-16	
					DISK,CLUTCH (1) 114-8	
					DISK,CLUTCH (3) 115-18	
					DISK,CLUTCH (4) 115-20	
					FILTER,ELEMENT (1) 105-15	
					FILTER,ELEMENT (1) 119-1	
					GASKET (1) 117-15	
					GASKET (1) 117-18	
					GASKET (1) 120-8	
					GASKET (1) 120-25	
					O-RING (1) 115-22	
					O-RING (1) 115-26	
					O-RING (2) 122-32	
					O-RING (2) 122-32	
					PACKING,PREFORMED (1) 114-13	
					RETAINER,PACKING (4) 114-15	
					RETAINER,PACKING (1) 114-15	
					RING,SEAL METAL (1) 117-3	
					SEAL,DIRECT,CLUTCH (1) 112-4	
					SEAL,INNER (1) 110-5	
					SEAL,PLAIN (1) 105-7	

(1) ITEM NO	(2) SMR CODE	(3) NSN	(4) CAGEC	(5) PART NUMBER	(6) DESCRIPTION AND USABLE ON CODES(UOC)	(7) QTY
					SEAL,PLAIN (2) 115-4	
					SEAL,PLAIN,ENCASED (1) 105-14	
					SEAL,PLAIN,ENCASED (2) 115-1	
34	PAHZZ	5330014800752	7X677	24210955	GASKET SET 1997,98.....	1
					UOC:BVY,B15,B20,B24,B25,C17,NNN	
					BOLT,MACHINE (7) 122-1	
					FILTER,ELEMENT (1) 105-15	
					FILTER,ELEMENT (1) 119-1	
					GASKET (1) 108-7	
					GASKET (1) 117-15	
					GASKET (1) 117-18	
					GASKET (1) 120-8	
					GASKET (1) 120-25	
					SEAL,PLAIN,ENCASED (1) 105-14	
35	PAHZZ		7X677	24210956	FILTER KIT,A/TRANS 1997,98.....	1
					UOC:BVY,B15,B20,B24,B25,C17,NNN	
					FILTER,ELEMENT (1) 105-15	
					GASKET (1) 108-7	
					SEAL,PLAIN,ENCASED (1) 105-14	
36	PAOZZ	2530011918741	62826	287-0006	PARTS KIT,DUST BOOT.....	1
					UOC:AVY,A11,A13,A14,A15,A20,A24,A25,	
					A26,A27,B16,B17,B18,HVY,H11,H13,H14,	
					H15,H16,H17,H18,H20,H21,H24,H25,H26,	
					H27,H28,MMM	
					BOOT,FIXED (1) 138-3	
					BOOT,FIXED (2) 145-3	
					CLAMP,RACE (2) 138-2	
					CLAMP,RACE (2) 145-2	
					CLAMP,RACE (2) 145-4	
					CLAMP,RIM (2) 138-4	
37	PAOZZ	2530013946168	62826	2880019	PARTS KIT,DUST BOOT.....	1
					UOC:AVY,A11,A13,A14,A15,A20,A24,A25,	
					A26,A27,B16,B17,B18,HVY,H11,H13,H14,	
					H15,H16,H17,H18,H20,H21,H24,H25,H26,	
					H27,H28,MMM	
					BOOT,FIXED (1) 138-3	
					BOOT,FIXED (1) 145-3	
					BOOT,PLUNGE (1) 145-10	
					CLAMP,LOOP (2) 138-2	
					CLAMP,LOOP (1) 138-4	
					CLAMP,LOOP (1) 138-15	
					CLAMP,LOOP (1) 145-15	
					CLAMP,RACE (1) 145-2	
					CLAMP,RACE (1) 145-4	
					RING,RETAINER (2) 138-13	
					RING,RETAINER (2) 145-13	
					RING,STOP (2) 138-13	
					SPACER,RING (2) 138-14	
					SPACER,RING (2) 145-14	
38	PAOZZ	2530014599493	62826	2990054	PARTS KIT,AXLE,VEHI.....	1
					UOC:BVY,B15,B20,B24,B25,C17,NNN	
					BOOT (2) 139-3	
					CLAMP,BOOT (2) 139-2	

(1) ITEM NO	(2) SMR CODE	(3) NSN	(4) CAGEC	(5) PART NUMBER	(6) DESCRIPTION AND USABLE ON CODES(UOC)	(7) QTY
					CLAMP,BOOT (2) 139-4	
					DEFLECTOR,DIRT (1) 139-8	
					JOINT ASSEMBLY (1) 139-7	
					JOINT ASSEMBLY (1) 146-7	
					PARTS KIT,DUST BOOT(2) 146-4	
					RING,RETAINING (2) 139-6	
					RING,RETAINING (2) 146-6	
					RING,SPACER (2) 139-5	
					SHAFT,SHOULDERED (1) 139-9	
39	PAOZZ	2530014599494	62826	2990055	PARTS KIT,AXLE,VEHI.....	1
					UOC:BVY,B15,B20,B24,B25,C17,NNN	
					BOOT (2) 139-3	
					CLAMP,BOOT (2) 139-2	
					CLAMP,BOOT (2) 139-4	
					DEFLECTOR,DIRT (1) 139-8	
					JOINT ASSEMBLY (1) 139-7	
					JOINT ASSEMBLY (1) 146-7	
					RING,RETAINING (2) 139-6	
					RING,SPACER (2) 139-5	
					SHAFT,SHOULDERED (1) 139-9	
40	PAOZZ	2530014599495	62826	2990056	PARTS KIT,AXLE,VEHI.....	1
					UOC:BVY,B15,B20,B24,B25,C17,NNN	
					BOOT (2) 146-3	
					CLAMP,BOOT (2) 146-2	
					DEFLECTOR,DIRT (1) 146-8	
					JOINT ASSEMBLY (1) 146-7	
					RING,SPACER (2) 146-5	
					SHAFT,SHOULDERED (1) 146-9	
41	PAFZZ	5330011907510	24975	36-630	GASKET SET.....	1
					GASKET,INTERMEDIATE(1) 45-6	
42	PAFZZ	5330011907509	68505	37-123A	GASKET SET.....	1
					GASKET (1) 45 32	
43	PAOZZ	2520011892135	95019	5-213X	PARTS KIT,UNIVERSAL.....	1
					UOC:AVY,A11,A13,A14,A15,A20,A24,A25,	
					A26,A27,BVY,B15,B16,B17,B18,B20,B24,	
					B25,C17,HVY,NNN	
					BEARING RACE (4) 136-7	
					BEARING RACE (4) 136-20	
					BEARING RACE (8) 137-6	
					BEARING RACE (8) 137-21	
					CROSS ASSEMBLY (1) 136-8	
					CROSS ASSEMBLY (2) 136-21	
					CROSS ASSEMBLY (2) 137-7	
					CROSS ASSEMBLY (2) 137-22	
					RING,RETAINING (4) 136-10	
					RING,RETAINING (8) 136-23	
					RING,RETAINING (8) 137-5	
					RING,RETAINING (8) 137-23	
44	PAHZZ	5365011753593	34623	5579445	SHIM ASSORTMENT PINION AXLE BEARING	1
					SPACER,RING (1) 148-17	
					SPACER,RING (1) 148-17	
					SPACER,RING (1) 148-17	
					SPACER,RING (1) 148-17	

(1) ITEM NO	(2) SMR CODE	(3) NSN	(4) CAGEC	(5) PART NUMBER	(6) DESCRIPTION AND USABLE ON CODES(UOC)	(7) QTY
					SPACER,RING (1) 148-17	
					SPACER,RING (1) 148-17	
					SPACER,RING (1) 148-17	
					SPACER,RING (1) 148-17	
					SPACER,RING (1) 148-17	
					SPACER,RING (1) 148-17	
					SPACER,RING (1) 148-17	
					SPACER,RING (1) 148-17	
					SPACER,RING (1) 148-17	
					SPACER,RING (1) 148-17	
					SPACER,RING (1) 148-17	
					SPACER,RING (1) 148-17	
					SPACER,RING (1) 148-17	
					SPACER,RING (1) 148-17	
					SPACER,RING (1) 148-17	
					SPACER,RING (1) 148-17	
					SPACER,RING (1) 148-17	
					SPACER,RING (1) 148-17	
					SPACER,RING (1) 148-17	
					SPACER,RING (1) 148-17	
					SPACER,RING (1) 148-17	
45	PAHZZ	5365011748174	34623	5579453	SHIM ASSORTMENT DIFFERENTIAL.....	1
					SPACER,RING (1) 148-20	
					SPACER,RING (1) 148-20	
					SPACER,RING (1) 148-20	
					SPACER,RING (1) 148-20	
					SPACER,RING (1) 148-20	
					SPACER,RING (1) 148-20	
					SPACER,RING (1) 148-20	
					SPACER,RING (1) 148-20	
					SPACER,RING (1) 148-20	
					SPACER,RING (1) 148-20	
					SPACER,RING (1) 148-20	
					SPACER,RING (1) 148-20	
					SPACER,RING (1) 148-20	
					SPACER,RING (1) 148-20	
					SPACER,RING (1) 148-20	
					SPACER,RING (1) 148-20	
					SPACER,RING (1) 148-20	
					SPACER,RING (1) 148-20	
					SPACER,RING (1) 148-20	
					SPACER,RING (1) 148-20	
					SPACER,RING (1) 148-20	
					SPACER,RING (1) 148-20	
					SPACER,RING (1) 148-20	
					SPACER,RING (1) 148-20	
					SPACER,RING (1) 148-20	
					SPACER,RING (1) 148-20	
					SPACER,RING (1) 148-20	
					SPACER,RING (1) 148-20	
					SPACER,RING (1) 148-20	

(1) ITEM NO	(2) SMR CODE	(3) NSN	(4) CAGEC	(5) PART NUMBER	(6) DESCRIPTION AND USABLE ON CODES(UOC)	(7) QTY
					SPACER,RING (1) 148-20	
					SPACER,RING (1) 148-20	
					SPACER,RING (1) 148-20	
					SPACER,RING (1) 148-20	
					SPACER,RING (1) 148-20	
					SPACER,RING (1) 148-20	
					SPACER,RING (1) 148-20	
					SPACER,RING (1) 148-20	
					SPACER,RING (1) 148-20	
					SPACER,RING (1) 148-20	
46	PAOZZ	25100136431120	19207	57K0107	PARTS KIT,HINGE TAI.....	1
					UOC:AVY,A11,A13,A14,A20,A24,A25,A26, A27,BVY,B17,B18,B20,B24,B25,C17,HVY, H11,H13,H14,H17,H18,H20,H24,H25,H26, H27,MMM,NNN	
					HINGE,BUTT (2) 266-14	
					NUT,SELF-LOCKING,HE(6) 266-16	
					PIN,SPRINGHINGE TAI(2) 266-20	
					SCREW,CAP,HEXAGON H(3) 266-21	
					SCREW,CAP,HEXAGON H(3) 266-23	
					SPACER,SLEEVE (3) 266-22	
					WASHER,FLAT (12) 266-15	
47	PAOZZ	2540012885240	19207	57K0109	KIT,REPLACEMENT 60 OR 100AMP ALTERNATOR MOUNTING BRACKET.....	1
					UOC:H11,H13,H14,H17,H18,H20,H21,H24, H25,H26,H27,H28,MMM	
					BRACKET,DOUBLE ANGL(1) 42-9	
					BRACKET,MOUNTING (1) 42-1	
					NUT,PLAIN,HEXAGON (1) 42-11	
					NUT,SELF-LOCKING,HE(1) 42-8	
					SCREW,CAP,HEXAGON H(1) 42-5	
					SCREW,CAP,HEXAGON H(1) 42-6	
					STUD,PLAIN (1) 42-2	
					WASHER,FLAT (1) 42-3	
					WASHER,FLAT (1) 42-7	
					WASHER,FLAT (1) 42-12	
					WASHER,LOCK (1) 42-4	
					WASHER,LOCK (1) 42-10	
48	PAFZZ	5340014120141	19207	57K0223	MODIFICATION KIT,BLAST SHIELD.....	1
					UOC:A11,A24,A27,B24,H11,H24,H27,MMM	
					CLIP,SPRING,TENSION(1) 278-2	
					CUTTER,SPOTWELD (1) 278-3	
					RIVIT,BLIND (28) 278-1	
49	PAOZZ	2640013718332	19207	57K0237	RUNFLAT KIT,INSERT.....	1
					UOC:AVY,A11,A13,A14,A15,A20,A24,A25, A26,A27,B16,B17,B18,HVY,H11,H13,H14, H15,H16,H17,H18,H20,H21,H24,H25,H26, H27,H28,MMM	
					BEDLOCK,TIRE RIM (1) 167-18	
					RUNFLAT,INSERT (4) 167-17	
50	PAFZZ	5330013618013	19207	57K0239	PARTS KIT,SEAL REPL SHAFT AND HOUSING.....	1
					SEAL KIT (1) 172-3	

(1) ITEM NO	(2) SMR CODE	(3) NSN	(4) CAGEC	(5) PART NUMBER	(6) DESCRIPTION AND USABLE ON CODES(UOC)	(7) QTY
					SEAL,PITMAN SHAFT (1) 172-19	
51	PAFZZ	5330013618014	19207	57K0240	PARTS KIT,SEAL REPL PISTON AND END PLUG.....	1
					PARTS KIT,STEERING (1) 172-9	
					PARTS KIT,STEERING (1) 172-21	
52	PAFZZ	5330013618015	19207	57K0241	PARTS KIT,SEAL REPL DUST AND STUB SHAFT.....	1
					PARTS KIT,SEAL REPL(1) 172-12	
					PARTS KIT,STEERING (1) 172-13	
53	PAFZZ	2530013618012	19207	57K0242	PARTS KIT,POWER STE GEAR.....	1
					BEARING ASSEMBLY (1) 172-7	
					PARTS KIT,LINEAR AC(1) 172-8	
					PARTS KIT,SAFETY RE(1) 172-6	
					PARTS KIT,STEERING (1) 172-11	
54	PAOZZ	2530014590367	34623	57K0262	PARTS KIT,BRAKE SHO.....	1
					UOC:H11,H13,H14,H15,H16,H17,H18,H20, H21,H24,H25,H26,H27,H28	
					DISC BRAKE SHOE,LH (4) 158-11	
					DISC BRAKE SHOE (4) 157-16	
55	PAOZZ	2530014073977	34623	57K0264	BRAKE SHOE SET.....	1
					UOC:AVY,A13,A14,A15,A25,A26,A27,BVY, B15,B16,B17,B18,B20,B24,B25,C17,HVY, H15,H16,H17,H18,H20,H21,H24,H25,H26, H27,H28,MMM	
					BRAKE SHOE ASSEMBLY(4) 158-11	
					DISC BRAKE SHOE (4) 157-16	
56	PAOZZ	2530013943748	19207	57K0274	KIT,BOOT PLUNGE.....	1
					UOC:AVY,A11,A13,A14,A15,A20,A24,A25, A26,A27,B16,B17,B18,HVY	
					BOOT,PLUNGE (1) 138-10	
					BOOT,PLUNGE (1) 145-10	
					CLAMP,BOOT (1) 145-15	
					CLAMP,LOOP (2) 138-2	
					CLAMP,LOOP (1) 138-15	
					CLAMP,RACE (1) 145-2	
					RING,RETAINER (2) 138-13	
					RING,RETAINER (2) 145-13	
					RING,SPACER (2) 145-14	
					RING,STOP (2) 138-13	
					SPACER,RING (2) 138-14	
57	PAOZZ	2640014196205	19207	57K0297	VALVE STEM ASSEMBLY.....	1
					UOC:AVY,A11,A13,A14,A15,A20,A24,A25, A26,A27,B16,B17,B18,HVY,H11,H13,H14, H15,H16,H17,H18,H20,H21,H24,H25,H26, H27,H28,MMM	
					ADAPTER,STRAIGHT,PI(1) 167-24	
					NUT,SELF-LOCKING,HE(1) 167-26	
					O-RING (1) 167-25	
					VALVE CORE (1) 167-22	
					VALVE,PHEUMATIC (1) 167-23	
58	PAOZZ	2530014138886	34623	57K3205	KIT,STEERING COLUMN.....	1
					HOUSING GEAR (1) 169-8	
					NUT,SELF-LOCKING,HE(1) 169-1	

(1) ITEM NO	(2) SMR CODE	(3) NSN	(4) CAGEC	(5) PART NUMBER	(6) DESCRIPTION AND USABLE ON CODES(UOC)	(7) QTY
					NUT,SELF-LOCKING,HE(6) 169-27	
					NUT,SELF-LOCKING,HE(2) 169-33	
					PIN,STRAIGHT,THREAD(1) 169-5	
					SCREW,CAP,HEXAGON H(4) 169-30	
					SCREW,CAP,SOCKET HE(2) 169-31	
					WASHER,FLAT (4) 169-32	
					WASHER,KEY (1) 169-3	
59	PAOZZ	2540014311338	19207	57K3222	PARTS KIT,TURN SIGN.....	1
					CONTROL,DIRECTIONAL(1) 49-1	
					CONTROL,DIRECTIONAL(1) 49-11	
					SCREW,TAPPING (4) 49-3	
					SCREW,TAPPING (3) 49-12	
60	PAOZZ	5980014388939	19207	57K3238	REPLACEMENT KIT,LENSE AND LAMP.....	1
					UOC:BVY,B15,B20,B24,B25,C17,NNN	
					SEMICONDUCTOR (2) 47-2	
					LENSE (2) 47-13	
61	PAOZZ	5330014596477	19207	57K3489	PARTS KIT,SEAL,PITMAN SHAFT AND	1
					HOUSING.....	
					UOC:BVY,B15,B20,B24,B25,C17,NNN	
					SEAL,KIT (1) 172-3	
					SEAL,PITMAN (1) 172-19	
62	PAFZZ	2520014305294	19207	57K3502	PARTS KIT,HYDRAULIC.....	1
					UOC:BVY,B15,B20,B24,B25,C17,NNN	
					MICROCIRCUIT,LINEAR(1) 50-4	
					TRANSMISSION,HYDRAU(1) 105-1	
63	PAOZZ	2530014559330	19207	57K3512	PARTS KIT,CALIPER,D.....	1
					BOOT,VEHICULAR COMP(1) 157-14	
					CAP,PISTON (1) 157-15	
					GASKET (1) 157-12	
					O-RING,ACTUATOR SHA(1) 157-11	
					O-RING,ANTI-ROTATIO(1) 157-7	
					O-RING,PIN RETAININ(1) 157-8	
					O-RING,THRUST SCREW(1) 157-13	
					SEAL,ACTUATOR SHAFT(1) 157-6	
64	PAOZZ	2530014571337	19207	57K3515	PARTS KIT,DUST BOOT.....	1
					UOC:BVY,B15,B20,B24,B25,C17,NNN	
					BOOT (2) 139-3	
					BOOT (2) 146-3	
					CLAMP,BOOT (2) 139-2	
					CLAMP,BOOT (2) 139-4	
					CLAMP,BOOT (2) 146-2	
					PARTS KIT,DUST BOOT(2) 146-4	
					RING,RETAINING (2) 139-6	
					RING,RETAINING (2) 146-6	
					RING,SPACER (2) 139-5	
					RING,SPACER (2) 146-5	
65	PAFZZ	2520014396830	19207	57K3523	TRANSMISSION,HYDRAU.....	1
					UOC:BVY,B15,B20,B24,B25,C17,NNN	
					MICROCIRCUIT,LINEAR(1) 50-4	
					TRANSMISSION,HYDRAU(1) 105-1	
66	PAOZZ	2530014433405	19207	57K3527	PARTS KIT,VEHICULAR WHEEL.....	1
					ADAPTER,STRAIGHT,PI(1) 167-24	
					CAP,PNEUMATIC VALVE(1) 167-21	

(1) ITEM NO	(2) SMR CODE	(3) NSN	(4) CAGEC	(5) PART NUMBER	(6) DESCRIPTION AND USABLE ON CODES(UOC)	(7) QTY
					NUT,SELF-LOCKING (12) 167-20	
					NUT,SELF-LOCKING,HE(1) 167-26	
					O-RING (1) 167-16	
					O-RING (1) 167-25	
					RIM,WHEEL,PNEUMATIC(1) 167-14	
					RIM,WHEEL,PNEUMATIC(1) 167-19	
					VALVE CORE (1) 167-22	
					VALVE,PNEUMATIC TIR(1) 167-23	
67	PAFZZ	2520014617072	19207	57K3539	TRANSMISSION,HYDRAU.....	1
					UOC:BVY,B15,B20,B24,B25,C17,NNN	
					MICROCIRCUIT,LINEAR(1) 50-4	
					TRANSMISSION,HYDRAU(1) 105-1	
68	PAFZZ	2920004721723	19207	5703776	PARTS KIT,ENGINE GE.....	1
					UOC:A11,A13,A14,A20,A24,A25,A26,A27,	
					B17,B18,H11,H13,H14,H17,H18,H20,H21,	
					H24,H25,H26,H27,H28	
					RECTIFIER AND LEAD (1) 406-26	
					RECTIFIER AND LEAD (1) 406-28	
69	PAFZZ	2920012222183	19207	5703776-1	PARTS KIT,ENGINE GE.....	1
					UOC:A11,A13,A14,A20,A24,A25,A26,A27,	
					B17,B18,H11,H13,H14,H17,H18,H20,H21,	
					H24,H25,H26,H27,H28,MMM	
					BRUSH,ELECTRICAL (2) 406-18	
					HOLDER AND STUD ASS(2) 406-16	
					PACKING,PREFORMED (1) 406-5	
					PACKING,PREFORMED (2) 406-9	
					PACKING,PREFORMED (1) 406-23	
					SEAL,SINGLE LIP (2) 406-4	
					SEAL,SINGLE LIP (1) 406-13	
					SEAL,SINGLE LIP (1) 406-21	
70	PFFZZ	2540002004249	19207	5704052	PARTS KIT,VEHICULAR BURNER ASSY....	1
					UOC:A15,B15,B16,H15,H16	
					BOLT,HOOK (4) 345-23	
					BOLT,HOOK (2) 348-22	
					CLAMP,RIM CLENCHING(4) 345-32	
					CLAMP,RIM CLENCHING(4) 348-23	
					GASKET (1) 345-20	
					GASKET (1) 348-20	
					HEADER,PLATE ASSEMB(1) 350-2	
					HEADER,PLATE ASSEMB(1) 351-1	
					NUT,HEXAGON (3) 350-1	
					NUT,PLAIN HEXAGON (4) 345-24	
					NUT,PLAIN HEXAGON (4) 348-3	
					NUT,SELF-LOCKING (4) 345-27	
					O-RING (1) 345-21	
					O-RING (1) 348-21	
					SCREW (3) 350-12	
					SCREW,MACHINE (1) 350-10	
					SCREW,MACHINE (1) 351-10	
					SHIELD,FUEL VAPOR (1) 350-9	
					SHIELD,FUEL VAPOR (1) 351-9	
					VAPORIZER (1) 350-6	
					VAPORIZER (1) 351-6	

(1) ITEM NO	(2) SMR CODE	(3) NSN	(4) CAGEC	(5) PART NUMBER	(6) DESCRIPTION AND USABLE ON CODES(UOC)	(7) QTY
					WASHER (1) 351-8	
					WASHER (1) 350-5	
					WASHER (2) 350-4	
					WASHER (1) 350-8	
					WASHER,FIBER (1) 351-5	
					WASHER,FLAT (1) 350-7	
					WASHER,FLAT (1) 351-7	
					WICK (1) 351-4	
					WICK (1) 350-3	
71	PAOZZ	2530011918740	34623	5705606	PARTS KIT,DUST BOOT.....	1
					UOC:H11,H13,H14,H15,H16,H17,H18,H20, H21,H24,H25,H26,H27,H28,MMM	
					BOOT,PLUNGE (1) 138-10	
					BOOT,PLUNGE (1) 145-10	
					CLAMP,RACE (2) 138-2	
					CLAMP,RIM (2) 138-4	
					CLAMP,RACE (2) 145-2	
					CLAMP,RIM (2) 145-4	
72	PAOZZ	2540013008745	19207	5705618	PARTS KIT,DOOR LATCH RIGHT HAND.....	1
					UOC:AVY,A13,A14,BVY,HVY,H13,H14,H21, H28,NNN	
					HANDLE,DOOR (1) 316-9	
					HANDLE,DOOR (1) 316-14	
					HANDLE,DOOR (1) 320-9	
					HANDLE,DOOR (1) 320-12	
					HANDLE,DOOR (1) 320-21	
					HANDLE,DOOR (1) 320-24	
					HANDLE,DOOR (1) 320-28	
					HANDLE,DOOR (1) 324-12	
					HANDLE,DOOR (1) 324-19	
					HANDLE,DOOR (1) 324-26	
					HANDLE,DOOR (1) 324-31	
					HANDLE,DOOR (1) 375-17	
					HANDLE,DOOR (1) 375-22	
					HANDLE,DOOR (1) 378-17	
					HANDLE,DOOR (1) 378-22	
					LEAF,BUTT HINGE (2) 320-25	
					LOOP,STRAP,FASTENER(1) 320-30	
					SCREW,MACHINE (1) 316-10	
					SCREW,MACHINE (1) 320-8	
					SCREW,MACHINE (1) 320-20	
					SCREW,MACHINE (1) 324-11	
					SCREW,MACHINE (1) 324-25	
					SCREW,MACHINE (1) 378-16	
					SPRING,HELICAL,TORS(1) 316-11	
					SPRING,HELICAL,TORS(1) 320-10	
					SPRING,HELICAL,TORS(1) 320-22	
					SPRING,HELICAL,TORS(1) 324-13	
					SPRING,HELICAL,TORS(1) 324-27	
					SPRING,HELICAL,TORS(1) 375-18	
					SPRING,HELICAL,TORS(1) 378-18	
					WASHER,FLAT (1) 316-13	
					WASHER,FLAT (1) 320-11	

(1) ITEM NO	(2) SMR CODE	(3) NSN	(4) CAGEC	(5) PART NUMBER	(6) DESCRIPTION AND USABLE ON CODES(UOC)	(7) QTY
					WASHER,FLAT (1) 320-23	
					WASHER,FLAT (1) 324-18	
					WASHER,FLAT (1) 375-21	
					WASHER,FLAT (1) 378-21	
73	PAOZZ	2540013008744	19207	5705619	HANDLE,DOOR,INSIDE LEFT HAND.....	1
					UOC:AVY,A13,A14,BVY,HVY,H13,H14,H21, H28,NNN	
					HANDLE,DOOR,VEHICUL(1) 316-9	
					HANDLE,DOOR,VEHICUL(1) 316-14	
					HANDLE,DOOR,VEHICUL(1) 320-9	
					HANDLE,DOOR,VEHICUL(1) 320-12	
					HANDLE,DOOR,VEHICUL(1) 320-21	
					HANDLE,DOOR,VEHICUL(1) 320-24	
					HANDLE,DOOR,VEHICUL(1) 324-12	
					HANDLE,DOOR,VEHICUL(1) 324-19	
					HANDLE,DOOR,VEHICUL(1) 324-26	
					HANDLE,DOOR,VEHICUL(1) 324-31	
					HANDLE,DOOR,VEHICUL(1) 375-17	
					HANDLE,DOOR,VEHICUL(1) 375-22	
					HANDLE,DOOR,VEHICUL(1) 378-17	
					HANDLE,DOOR,VEHICUL(1) 378-22	
					SCREW,MACHINE (1) 316-10	
					SCREW,MACHINE (1) 320-20	
					SCREW,MACHINE (1) 320-8	
					SCREW,MACHINE (1) 324-11	
					SCREW,MACHINE (1) 324-25	
					SCREW,MACHINE (1) 378-16	
					SPRING,HELICAL,TORS(1) 316-11	
					SPRING,HELICAL,TORS(1) 320-10	
					SPRING,HELICAL,TORS(1) 320-22	
					SPRING,HELICAL,TORS(1) 324-13	
					SPRING,HELICAL,TORS(1) 324-27	
					SPRING,HELICAL,TORS(1) 375-18	
					SPRING,HELICAL,TORS(1) 378-18	
					WASHER,FLAT (1) 316-13	
					WASHER,FLAT (1) 320-11	
					WASHER,FLAT (1) 320-23	
					WASHER,FLAT (1) 324-18	
					WASHER,FLAT (1) 324-30	
					WASHER,FLAT (1) 375-21	
					WASHER,FLAT (1) 378-21	
					WASHER,FLAT (1) 324-30	
74	PAHZZ	5365011748184	34623	5740228	SHIM SET.....	1
					UOC:H11,H13,H14,H15,H16,H17,H18,H20, H21,H24,H25,H26,H27,H28,MMM	
					SHIM (1) 128-6	
					SHIM (1) 128-6	
					SHIM (1) 128-6	
					SHIM (1) 128-6	
					SHIM (1) 128-6	
					SHIM (1) 128-6	
75	PAHZZ	3110011753538	34623	5740229	BEARING,ROLLER,NEED.....	1
					UOC:H11,H13,H14,H15,H16,H17,H18,H20,	

(1) ITEM NO	(2) SMR CODE	(3) NSN	(4) CAGEC	(5) PART NUMBER	(6) DESCRIPTION AND USABLE ON CODES(UOC)	(7) QTY
					H21,H24,H25,H26,H27,H28,MMM	
					ROLLER,BEARING (82) 128-27	
76	XDOZZ		34623	5741093	SHAFT,SHOULDERED.....	1
					UOC:H11,H13,H14,H15,H16,H17,H18,H20,	
					H21,H24,H25,H26,H27,H28,MMM	
					RING,RETAINING (2) 138-6	
					RING,SPACER (2) 138-5	
					SHAFT,SHOULDERED (1) 138-9	
77	PAOZZ	3040012064145	34623	5741094	SHAFT,SHOULDERED.....	1
					UOC:H11,H13,H14,H15,H16,H17,H18,H20,	
					H21,H24,H25,H26,H27,H28,MMM	
					RING,RETAINING (2) 138-6	
					RING,SPACER (2) 138-5	
					SHAFT,SHOULDERED (1) 138-9	
78	XDOZZ		34623	5741095	SHAFT,SHOULDERED.....	1
					UOC:HVY,H11,H13,H14,H15,H16,H17,H18,	
					H20,H21,H24,H25,H26,H27,H28,MMM	
					RING,RETAINING (2) 145-6	
					RING,SPACER (2) 145-5	
					SHAFT,SHOULDERED (1) 145-9	
79	PAHZZ	2540012898330	34623	5741908	SEAL,KIT.....	1
					UOC:A15,B15,H15	
					RING,FELT (1) 491-18	
					RING,RETAINING (1) 491-17	
					SEAL (1) 491-14	
					SEAL (1) 491-15	
					SEAL (1) 491-16	
80	PAOZZ	2540012888567	34623	5742041	KIT,REPLACEMENT 200AMP ALTERNATOR	1
					MOUNTING BRACKET.....	
					UOC:HVY,H15,H16	
					BRACKET,DOUBLR ANGL(1) 42-9	
					BRACKET,MOUNTING (1) 42-1	
					NUT,PLAIN,HEXAGON H(1) 42-11	
					NUT,SELF-LOCKING (1) 42-8	
					SCREW,CAP,HEXAGON H(1) 42-5	
					SCREW,CAP,HEXAGON H(1) 42-6	
					STUD,PLAIN (1) 42-2	
					WASHER,FLAT (1) 42-3	
					WASHER,FLAT (1) 42-7	
					WASHER,FLAT (1) 42-12	
					WASHER,LOCK (1) 42-4	
					WASHER,LOCK (1) 42-10	
81	PAOZZ	5340013889512	34623	5935425	KIT,BATTERY.....	1
					BOOT,DUST (3) 69-16	
					CAP,PROTECTIVE (3) 69-17	
82	PAFZZ	2530011238787	7X677	7846626	VALVE,STEERING SECT.....	1
					BODY VALVE (1) 172-14	
					SHAFT,STEERING (1) 172-16	
					VALVE,LINEAR,DIRECT(1) 172-15	
83	PAFZZ	5330010440703	52788	7848522	PARTS KIT,SEAL REPL POWER STEERING	1
					PUMP.....	
					GASKET (1) 176-11	
					MAGNET,ERMANENT (1) 176-8	

(1) ITEM NO	(2) SMR CODE	(3) NSN	(4) CAGEC	(5) PART NUMBER	(6) DESCRIPTION AND USABLE ON CODES(UOC)	(7) QTY
					O-RING (2) 176-14	
					RING,SEAL (2) 176-4	
					SEAL (1) 176-3	
					SEAL (1) 176-7	
					SEAL,O-RING (1) 176-5	
84	PAFZZ	5330004933876	11083	8S4680	PACKING,PREFORMED.....	1
					SEAL,O-RING (3) 45-52	
85	PAHZZ	5330012881307	63829	8385-9611	GASKET SET.....	1
					UOC:A15,B15,H15	
					GASKET (1) 491-25	
					GASKET (1) 491-27	
86	PAHZZ	5330011385190	11862	8623917	SEAL,KIT.....	1
					UOC:AVY,A11,A13,A14,A15,A20,A24,A25, A26,A27,B16,B17,B18,HVY,H11,H13,H14, H15,H16,H17,H18,H20,H21,H24,H25,H26, H27,H28,MMM	
					SEAL,CENTER (1) 111-4	
					SEAL,INNER (1) 111-5	
					SEAL,OUTTER (1) 111-3	
87	PAHZZ	3120011674172	7X677	8623920	PARTS KIT,BEARING R.....	1
					UOC:AVY,A11,A13,A14,A15,A20,A24,A25, A26,A27,B16,B17,B18,HVY,H11,H13,H14, H15,H16,H17,H18,H20,H21,H24,H25,H26, H27,H28,MMM	
					BEARING,NEEDLE (1) 106-5	
					BEARING,NEEDLE (1) 107-5	
					RACE,BEARING (1) 106-4	
					RACE,BEARING (1) 106-6	
					RACE,BEARING (1) 107-4	
					RACE,BEARING (1) 107-6	
88	PAHZZ	3110011672443	7X677	8623921	BEARING,ROLLER,THRU.....	1
					BEARING,NEEDLE (1) 106-25	
					BEARING,NEEDLE (1) 107-11	
					RACE,BEARING (1) 106-24	
					RACE,BEARING (1) 106-26	
					RACE,BEARING (1) 107-10	
					RACE,BEARING (1) 107-12	
					RING,RETAINER (1) 106-19	
89	PAHZZ	3110011690734	7X677	8623922	BEARING,ROLLER,THRU TRANSMISSION...	1
					BEARING,NEEDLE (1) 106-21	
					BEARING,NEEDLE (1) 107-19	
					RACE,BEARING (1) 106-20	
					RACE,BEARING (1) 106-22	
					RACE,BEARING (1) 107-18	
					RACE,BEARING (1) 107-20	
90	PAHZZ	2520011513570	7X677	8625990	PARTS KIT,RACE ASSE.....	1
					UOC:AVY,A11,A13,A14,A15,A20,A24,A25, A26,A27,B16,B17,B18,HVY,H11,H12,H14, H15,H16,H17,H18,H20,H21,H24,H25,H26, H27,H28	
					GASKET (1) 116-20	
91	PAHZZ	2520011637213	7X677	8627989	PARTS KIT,TRANSMISS.....	1
					UOC:AVY,A11,A13,A14,A15,A20,A24,A25,	

(1) ITEM NO	(2) SMR CODE	(3) NSN	(4) CAGEC	(5) PART NUMBER	(6) DESCRIPTION AND USABLE ON CODES(UOC)	(7) QTY
					A26,A27,B16,B17,B18,HVY,H11,H13,H14,	
					H15,H16,H17,H18,H20,H21,H24,H25,H26,	
					H27,H28	
					DISK,CLUTCH (1) 111-10	
					PARTS KIT,TRANSMISS(1) 111-6	
92	PAHZZ	5330010865457	7X677	8629955	PARTS KIT,TRANSMISSION PISTON AND	1
					APPLY RING.....	
					UOC:AVY,A11,A13,A14,A15,A20,A24,A25,	
					A26,A27,B16,B17,B18,HVY,H11,H13,H14,	
					H15,H16,H17,H18,H20,H21,H24,H25,H26,	
					H27,H28,MMM	
					DISK,CLUTCH (6) 109-3	
					PACKING,PREFORMED (1) 113-13	
					PACKING,PREFORMED (1) 113-14	
					RETAINER,PACKING (4) 113-12	
					SEAL (1) 109-8	
					SEAL (1) 109-18	
					SEAL (1) 109-19	
					SEAL (1) 121-22	
93	PAFZZ	2520014108067	7X677	8680911	PARTS KIT,MECHANICA.....	1
					UOC:BVY,B15,B20,B24,B25,C17,NNN	
					RING,RETAINING (1) 115-12	
94	PAHZZ	3120011748153	7X677	8680914	KIT,TRANSMISSION.....	1
					UOC:BVY,B15,B20,B24,B25,C17,NNN	
					CLUTCH,SPRING (1) 113-16	
					PISTON (1) 114-12	
					SEAL ASSEMBLY (1) 113-15	
					SUPPORT (1) 113-11	
					SUPPORT (1) 114-17	
95	PAHZZ	2520014108077	7X677	8680915	KIT,TRANSMISSION.....	1
					UOC:BVY,B15,B20,B24,B25,C17,NNN	
					DISK,CLUTCH (1) 109-14	
					DISK,CLUTCH (1) 114-3	
					RACE (1) 114-2	
					RING (1) 110-14	
					SPRAG ASSEMBLY (1) 114-1	
96	PAFZZ	2520014108079	7X677	8680918	HOUSING PART,TRANSM.....	1
					UOC:BVY,B15,B20,B24,B25,C17,NNN	
					SHAFT ASSEMBLY (1) 115-2	
97	PAHZZ	2520011647157	7X677	8680929	PISTON AND RING ASSY REAR	1
					ACCUMULATOR.....	
					UOC:BVY,B15,B20,B24,B25,C17,NNN	
					PISTON (1) 117-12	
					RING,OIL SEAL (1) 117-11	
					RING,OIL SEAL,OUTER(1) 117-14	
98	PAFZZ		7X677	8685921	PARTS KIT,TRANSMISS.....	1
					UOC:BVY,B15,B20,B24,B25,C17,NNN	
					MAGNET,CLIP,COLLECT(1) 105-16	
					PAN,TRANSMISSION (1) 105-18	
					PLUG,PROTECTIVE,DUS(1) 105-21	
					WASHER,FLAT (1) 105-20	
99	PAFZZ	2920011922959	68505	90-816	PARTS KIT,SOLENOID.....	1
					BOOT (1) 45-27	

(1) ITEM NO	(2) SMR CODE	(3) NSN	(4) CAGEC	(5) PART NUMBER	(6) DESCRIPTION AND USABLE ON CODES(UOC)	(7) QTY
					RETAINER CORE (1) 45-24	
					RETAINER CORE (1) 45-26	
					SNAP RING CORE END (1) 45-23	
					SPRING,CORE (1) 45-25	
					WASHER,SOLENOID (1) 45-28	
100	PAFZZ	2920011684128	68505	90-2187	PARTS KIT,ENGINE GE.....	1
					UOC:A11,A13,A14,A20,A24,A25,A26,A27,	
					B17,B18,H11,H13,H14,H17,H18,H20,H21,	
					H24,H25,H26,H27,H28,MMM	
					BOLT,THRU,TORX (6) 43-59	
					HOLDER,ELECTRICAL (1) 43-40	
					PLUG,YOKE ADJUSTING(1) 43-56	
					SCREW,FLAT HEAD (6) 43-60	
					SCREW,SELF-TAPPING (6) 43-26	
					SCREW,TORX (6) 43-58	
					WASHER,LOCK (6) 43-25	
					WASHER,LOCK (1) 43-35	
					WASHER,LOCK (12) 43-57	
101	PAFZZ	5310010279392	68505	90-2188	NUT,SELF-LOCKING,CA.....	1
					UOC:A11,A13,A14,A20,A24,A25,A26,A27,	
					B17,B18,H11,H13,H14,H17,H18,H20,H21,	
					H24,H25,H26,H27,H28,MMM	
					KEY,WOODRUFF (1) 43-4	
					NUT (1) 43-2	
					WASHER,FLAT (1) 43-3	
102	PAFZZ	2920003026342	68505	90-2206	PARTS KIT,YOKE ADJU.....	1
					GASKET PLUG (1) 45-15	
					NUT (1) 45-22	
					PIN,STRAIGHT (2) 45-13	
					PLUG,YOKE,ADJUSTING(1) 45-16	
					PLUG,YOKE,ADJUSTING(1) 45-14	
103	PAFZZ	2920010687182	68505	90-2225	PARTS KIT,ENGINE GE.....	1
					CONTACK ASSEMBLY (1) 45-35	
					NUT,HEXAGON ELASTIC(1) 45-33	
					SPRING (1) 45-36	
					WASHER,PLAIN (1) 45-34	
					WASHER,STEEL (1) 45-37	
104	PAFZZ	2920011684129	68505	90-2531	PARTS KIT,ENGINE GE.....	1
					UOC:A11,A13,A14,A20,A24,A25,A26,A27,	
					B17,B18,H11,H13,H14,H17,H18,H20,H21,	
					H24,H25,H26,H27,H28,MMM	
					BEARING,BALL (1) 43-12	
					END HEAD (1) 43-15	
					O-RING (1) 43-10	
					RETAINER ASSEMBLY (1) 43-6	
					SEAL,KIT (1) 43-7	
					SEAL,KIT (1) 43-13	
					SPACER (1) 43-9	
					SPRING,SEAL BEARING(1) 43-8	
					WASHER (1) 43-11	
105	PAFZZ	2920011684130	68505	90-2532	PARTS KIT,ENGINE GE.....	1
					UOC:A11,A13,A14,A20,A24,A25,A26,A27,	
					B17,B18,H11,H13,H14,H17,H18,H20,H21,	

(1) ITEM NO	(2) SMR CODE	(3) NSN	(4) CAGEC	(5) PART NUMBER	(6) DESCRIPTION AND USABLE ON CODES(UOC)	(7) QTY
					H24,H25,H26,H27,H28,MMM	
					BEARING,OUTER RACE (1) 43-17	
					RETAINER,BEARING (1) 43-21	
					RETAINER,FELT (1) 43-18	
					RETAINER,FELT (1) 43-20	
					RING,SEAL BEARING (1) 43-22	
					RING,SEAL BEARING (1) 43-24	
					SEAL (1) 43-16	
					WASHER,FELT (1) 43-19	
106	PAFZZ	5305011889707	68505	90-2836	SCREW ASSORTMENT.....	1
					SCREW,ASSORTMENT (1) 45-65	
					SCREW,HEX HEAD (7) 45-19	
					SCREW,HEX HEAD (4) 45-76	
107	PAFZZ	2920011922956	68505	90-2837	PARTS KIT,ENGINE GE.....	1
					BUSHING,INSULATING (1) 45-53	
					BUSHING,INSULATING (1) 45-72	
					NUT,HEXAGON (1) 45-59	
					NUT,HEXAGON (4) 45-61	
					NUT,HEXAGON (1) 45-78	
					NUT,HEXAGON (3) 45-81	
					STUD,TERMINAL (1) 45-64	
					STUD,TERMINAL (1) 45-66	
					STUD,TERMINAL (1) 45-70	
					WASHER,CUP,STARTER (1) 45-56	
					WASHER,CUP,STARTER (1) 45-75	
					WASHER,INSULATING (1) 45-55	
					WASHER,INSULATING (1) 45-62	
					WASHER INSULATING (1) 45-71	
					WASHER,INSULATING (1) 45-74	
					WASHER,NEOPRENE (1) 45-54	
					WASHER,NEOPRENE (2) 45-73	
					WASHER,LOCK (4) 45-58	
					WASHER,LOCK (2) 45-80	
					WASHER,PLAIN (1) 45-57	
					WASHER,PLAIN (1) 45-63	
					WASHER,PLAIN (1) 45-77	
108	PAFZZ	2920011924473	68505	90-2838	PARTS KIT,ENGINE GE.....	1
					BEARING,ABS BRONZE (1) 45-69	
					FELT OIL RETAINER (1) 45-68	
					SCREW,FILL HEAD (3) 45-5	
109	PAFZZ	3120011914637	19728	90-2840	PARTS KIT,BEARING R.....	1
					SPACER (1) 45-7	
					THRUST WASHER (1) 45-39	
					THRUST WASHER (8) 45-40	
					WASHER,FLAT (1) 45-1	
110	PAFZZ	2920011916534	68505	90-2841	PARTS KIT,ENGINE GE.....	1
					PINION STOP STARTER(1) 45-10	
					SNAP,RING (1) 45-11	
111	PAFZZ	2520012893617	63829	9103-9800	PARTS KIT,CLUTCH DI.....	1
					UOC:A15,B15,H15	
					CLAMP (1) 491-12	
					KEY,MACHINE (1) 491-4	
					NUT (1) 491-2	

(1) ITEM NO	(2) SMR CODE	(3) NSN	(4) CAGEC	(5) PART NUMBER	(6) DESCRIPTION AND USABLE ON CODES(UOC)	(7) QTY
					RING,SNAP (1) 491-5	
					RING,SNAP (1) 491-7	
					SCREW (1) 491-11	
					SHIM (1) 491-19	
					SHIM (1) 491-20	
					SHIM (1) 491-21	
112	PAFZZ	2520012903921	63829	9140-9810	PARTS KIT,CLUTCH DI.....	1
					UOC:AVY,BVY,HVY	
					PLATE (1) 491-3	
					PULLLEY (1) 491-6	

END OF FIGURE

(1) ITEM NO	(2) SMR CODE	(3) NSN	(4) CAGEC	(5) PART NUMBER	(6) DESCRIPTION AND USABLE ON CODES(UOC)	(7) QTY
					GROUP 95 GENERAL USE STANDARIZED PARTS	
					9501 HARDWARE SUPPLIES AND BULK MATERIAL,COMMON	
					FIG. BULK	
1	PAOZZ	2590014579922	19207	12340103	BEZEL,AUTOMOTIVE.....	V
2	PAOZZ	4010005852108	16004	C43974	CHAIN,WELDLESS TYPE"2",CLASS 2 STEEL,10 LINK.....	V
3	PAOZZ	4020002460688	81755	P5006-4G	CORD,FIBROUS.....	V
4	PAOZZ		7X677	20197272	FASTENER,TAPE,HOOK.....	V
5	PAOZZ	5330010419721	26051	R-451-N	GASKET 3/16 THICK, 42 INCHES WIDE, 60 FT. LONG.....	V
6	PAOZZ	5325000743301	96906	MS21266-2N	GROMMET,NONMETALLIC FLEXIBLE, .162 INCHES X .200 INCHES X 25.0 FEET LONG,BLACK.....	V
7	PAOZZ		7X677	9440949	HOSE.....	V
8	PAOZZ	4720001115096	21868	AD778-08B79	HOSE,AIR DUCT REINFORCED 2.00 I.D., 12 FT LONG,WIRE.....	V
9	PAOZZ	4720001393968	24161	4377	HOSE,NONMETALLIC 1-3/4 I.D.,1.00 O.D., 50 FT LONG.....	V
10	PAOZZ	4720000069541	81349	MIL-H-13444	HOSE,NONMETALLIC.....	V
11	PAOZZ	4720011637833	7X677	9439402	HOSE,NONMETALLIC.....	V
12	PAOZZ	4720011560549	7X677	9439046	HOSE,NONMETALLIC.....	V
13	PAOZZ		7X677	GM-6165-M	HOSE,NONMETALLIC.....	V
14	PAOZZ	4720011482768	7X677	9438306	HOSE,NONMETALLIC.....	V
15	PAOZZ	4720013162538	19207	12338553	HOSE,NONMETALLIC.....	V
16	PAOZZ		60703	208-4	HOSE,NONMETALLIC.....	V
17	PAOZZ	4720011647803	60703	846-50	HOSE,NONMETALLIC SYNTHETIC RUBBER INNER,1/2 O.D.,3/16 I.D.,50 FT LONG.	V
18	PAOZZ	4720006844033	83065	RB1450-1-4IDX1-2 0D	HOSE,NONMETALLIC RUBBER, INNER TUBE, OUTER COVER, FIBER BRAID,1/2 O.D.,1/4 I.D.,50 FT LONG.....	V
19	PAOZZ	4720011699891	61424	PFT-6B	HOSE,NONMETALLIC NYLON,3/8 O.D.,5/16 I.D.,50 FT LONG.....	V
20	PAOZZ	4720010036706	61424	PFT-8B-BLK	HOSE,NONMETALLIC.....	V
21	PAOZZ	4720011883190	59150	1775-826	HOSE,NONMETALLIC SYNTHETIC RUBBER INNER O.D., 1/4 I.D., 1/8, 50 FT LONG.....	V
22	PAOZZ	4720011856673	34623	ET029	HOSE,NONMETALLIC SPIRAL REINFORCED, .380 O.D.,290 I.D.,15 FT LONG.....	V
23	PAOZZ	4720011862358	81300	6490610019	HOSE,NONMETALLIC FUEL AND OIL RESISTANT,3/8 I.D.,5/8 O.D.,25 FT LONG.....	V
24	PAOZZ	4720002414435	30327	C110-10	HOSE,NONMETALLIC.....	V
25	PAOZZ	4720011595796	7X677	9438373	HOSE,NONMETALLIC FUEL AND OIL RESISTANT,5/8 O.D.,3/8 I.D.,25 FT LONG.....	V
26	PAOZZ	4720011557784	7X677	9438257	HOSE,NONMETALLIC 1/2 O.D. X 1/4 I.D.,50 FT LONG.....	V
27	PAOZZ	4720004910102	96906	MS521301A203R	HOSE,NONMETALLIC STRAIGHT,ENGINE	V
28	PAOZZ	4720005558015	96906	MS521302B206R	HOSE,NONMETALLIC.....	V

(1) ITEM NO	(2) SMR CODE	(3) NSN	(4) CAGEC	(5) PART NUMBER	(6) DESCRIPTION AND USABLE ON CODES(UOC)	(7) QTY
					COOLANT.....	
29	PAOZZ		81349	M23053/4-202-2	INSULATION SLEEVING.....	V
30	PAOZZ		81349	M23053/4-203-2	INSULATION SLEEVING.....	V
31	PAOZZ		81349	M23053/4-302-0	INSULATION SLEEVING.....	V
32	PAOZZ		81349	M23053/4-302-2	INSULATION SLEEVING.....	V
33	PAOZZ	5970011422282	81349	M23053/4-303-0	INSULATION SLEEVING ELECTRICAL, BLACK (12 OR 14-14 AWG)	V
34	PAOZZ		81349	M23053/4-303-2	INSULATION SLEEVING.....	V
35	PAOZZ		81349	M23053/4-304-0	INSULATION SLEEVING.....	V
36	PAOZZ		81349	M23053/4-304-2	INSULATION SLEEVING.....	V
37	PAOZZ		81349	M23053/6-103-6	INSULATION SLEEVING.....	V
38	PAOZZ		81349	M23053/6-104-2	INSULATION SLEEVING.....	V
39	PAOZZ		81349	M23053/6-107-0	INSULATION SLEEVING.....	V
40	PAOZZ		81349	M23053/6-107-1	INSULATION SLEEVING.....	V
41	PAOZZ		81349	M23053/15-112-0	INSULATION SLEEVING.....	V
42	PAOZZ		81349	M23053/15-112-2	INSULATION SLEEVING.....	V
43	PAOZZ	2590011967281	19207	12339902-1	PAD,CUSHIONING 3/8 THICK, 9/32 WIDE, 800 FT LONG.....	V
44	PAOZZ	2590013127355	28818	CF40BH52	PAD,CUSHIONING 50 YARDS X 54 INCHES WIDE X 1 INCH THICK.....	V
45	PAOZZ	4710012282177	81346	D1785	PIPE,PLASTIC.....	V
46	PAOZZ	5330012914615	34623	5741221	PLASTIC STRIP 1/4 THICK, 1/2 WIDE, 20 FT LONG.....	V
47	PAOZZ	5530006416069	81349	MIL-P-18066	PLYWOOD,CONSTRUCTIO 3/4 THICK.....	V
48	PAOZZ	5530002628195	81348	NN-P-530	PLYWOOD,CONSTRUCTIO 1/2 THICK, 48 INCHES WIDE, 8 FT LONG.....	V
49	PAOZZ		81343	QQ-A-250/11	SHEET,METAL.....	V
50	PAOZZ	4010012930586	81349	MIL-W-83420/2-002	ROPE,WIRE .062-INCH DIAMETER.....	V
51	PAOZZ	4010009290041	39428	8930T31	ROPE,WIRE.....	V
52	PAOZZ	5330011983521	19207	12340721	RUBBER STRIP ETHYLENE PROPYLENE TERPOLYMER, ASTM 0-1056-68.38 X 40 X 10 INCHES.....	V
53	PAOZZ	5330012816523	82942	68-412121-1	SEAL,NONMETALLIC SP .250 THICK,1/2 WIDE, 50 FT LONG.....	V
54	PAOZZ	5330013218622	41024	21022103	SEAL,NONMETALLIC SP SPECIAL, EDPM WIRE CARRIER, 396 FT LONG.....	V
55	PAOZZ	5330012131312	06968	1403	SEAL,NONMETALLIC SP SPECIAL, EDPM RUBBER, WIRE CARRIER, 18 FT LONG....	V
56	PAOZZ	5330013117953	76385	IC006197	SEAL,NONMETALLIC SP.....	V
57	PAOZZ		81343	R-495-T	SEAL,NONMETALLIC SP.....	V
58	PAOZZ	5330014091981	19207	12460108-3	SEAL,NONMETALLIC SP..... ASSEMBLY,FABRICATE FROM P/N Y-9485, 13 INCHES LONG.....	V
59	PAOZZ	9320011552369	45152	4965	TAPE,ADHESIVE,RUBBE RUBBER DOUBLE COATED, NEOPRENE, 3/4 X .45 X 108 FT LONG.....	V
60	PAOZZ		19207	12339376-1	TAPE,PRESSURE SENSI.....	V
61	PAOZZ		81343	15618240	TUBE.....	V
62	PAOZZ	4720010587213	19207	CPR104420-1	TUBING,NONMETALLIC PLASTIC, .170	V
63	PAOZZ		19207	CPR104420-2	TUBING,NONMETALLIC..... INCH I.D., .250 INCH O.D.....	V
64	PAOZZ		81349	M6885/4-16H029	TUBING,NONMETALLIC.....	V

(1) ITEM NO	(2) SMR CODE	(3) NSN	(4) CAGEC	(5) PART NUMBER	(6) DESCRIPTION AND USABLE ON CODES(UOC)	(7) QTY
65	PAOZZ	4720014219718	19207	12420924-004	TUBING,NONMETALLIC.....	V
66	PAOZZ	9330000112000	00624	AE208-10	TUBING,PLASTIC,SPIR.....	V
67	PAOZZ	9330012521239	81349	B47287-II-1/2	TUBING,PLASTIC,SPIR OIL COOLANT LINES,.50 I.D.,.850 O.D.,100 FT LONG	V
68	PAOZZ	6145013419591	81349	M13486/1-4	WIRE,ELECTRICAL.....	V
69	PAOZZ	6145005388222	81349	M13486/1-9	WIRE,ELECTRICAL.....	V
70	PAOZZ	6145005388219	81349	M13486/1-11	WIRE,ELECTRICAL 4 AWG, SINGLE CONDUCTOR.....	V
71	PAOZZ	6145007056674	81349	M13486/1-14	WIRE,ELECTRICAL 0 AWG, SINGLE CONDUCTOR.....	V
72	PAOZZ	5510002706031	97403	13219E0079	WOOD LAMINATE,DECKI DECKING.....	V
73	PAOZZ		19207	12339317-1	WRAP.....	V

END OF FIGURE

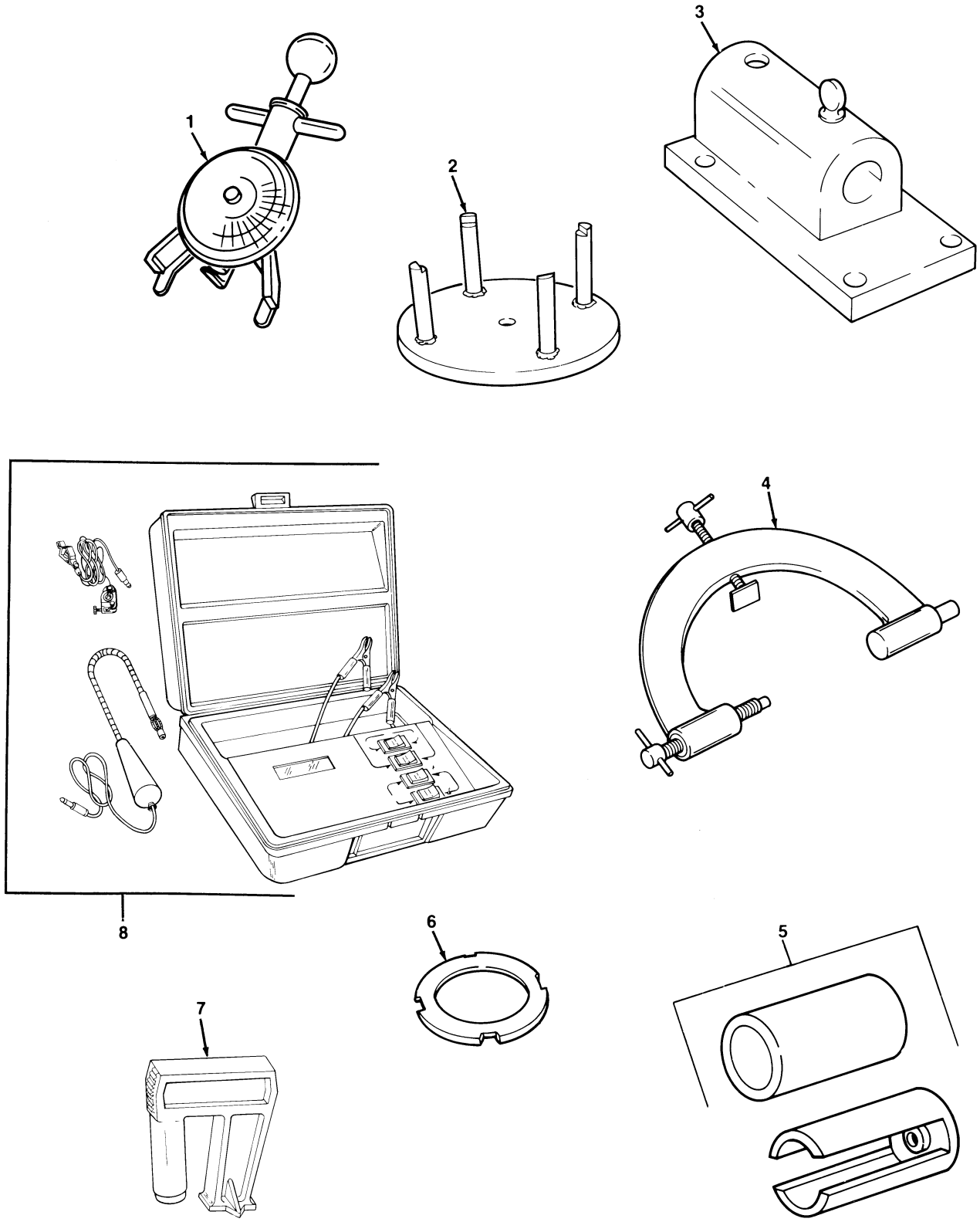

Figure 499. Special Tools, Drive Belts and Transmission.

(1) ITEM NO	(2) SMR CODE	(3) NSN	(4) CAGEC	(5) PART NUMBER	(6) DESCRIPTION AND USABLE ON CODES(UOC)	(7) QTY
					GROUP 26 TOOL AND TEST EQUIPMENT 2604 SPECIAL TOOLS	
					FIG. 499 SPECIAL TOOLS, DRIVE BELTS AND TRANSMISSION	
1	PEOZZ	6635010933710	33287	BT-33-73F	TENSIOMETER,DIAL IN BOI: SEE PARA. 5.I, PART OF KIT P/N 57K0267.....	
2	PEHZZ	5120012108793	33287	J4670-01	COMPRESSOR,CLUTCH,S SPRING,BOI: SEE PARA. 5.I, PART OF KIT P/N 57K0266.....	
3	PEHZZ	5120011444484	33287	J3289-20	BASE,HOLDING FIXTUR TRANSMISSION, BOI: SEE PARA. 5.I, PART OF KIT P/N 57K0266.....	
4	PEHZZ	5120011987583	33287	J8763-02	FIXTURE,HOLDING,TRA TRANSMISSION, BOI: SEE PARA. 5.I, PART OF KIT P/N 57K0266.....	
5	PEHZZ	4910011788865	25341	J21795-02	HOLDING UNIT,GEAR TRANSMISSION,BOI: SEE PARA. 5.I, PART OF KIT P/N 57K0266.....	
6	PEHZZ	4910012101318	33287	J21664	ADAPTER,COMPRESSOR CLUTCH SPRING, BOI: SEE PARA.,5.I, PART OF KIT P/N 57K0266.....	
7	PEFZZ	4910012313671	55719	MT95	GAGE,TIMING,DIESEL BOI: SEE PARA. 5.I, PART OF KIT P/N 57K0268.....	
8	PEFZZ	5180011863114	33287	J33127	TOOL KIT,ENGINE TIM DYNAMIC,BOI: SEE PARA. 5.I, PART OF KIT P/N 57K0268.....	

END OF FIGURE

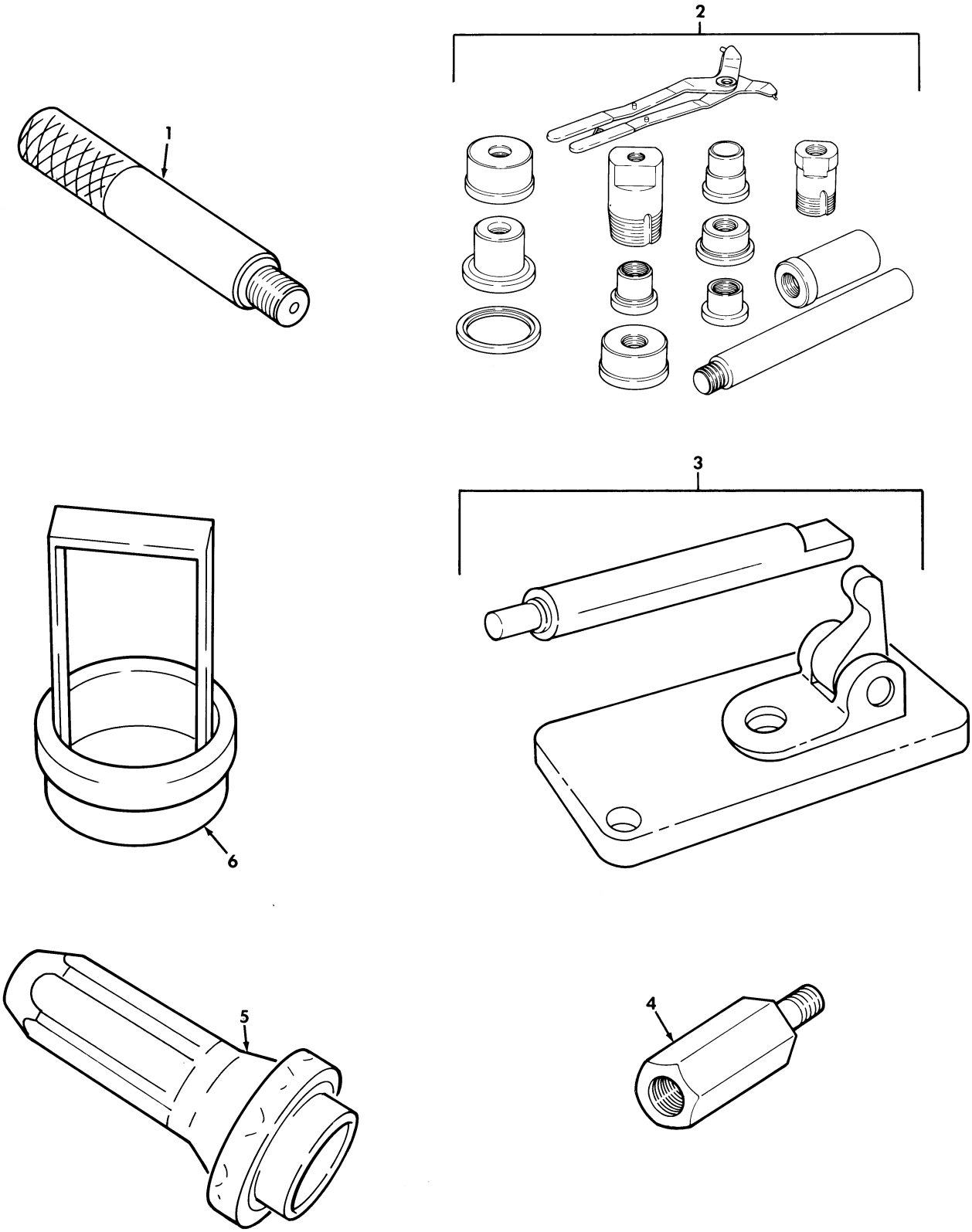

Figure 500. Special Tools, Transmission.

(1) ITEM NO	(2) SMR CODE	(3) NSN	(4) CAGEC	(5) PART NUMBER	(6) DESCRIPTION AND USABLE ON CODES(UOC)	(7) QTY
					GROUP 2604 SPECIAL TOOLS	
					FIG. 500 SPECIAL TOOLS,TRANSMISSION	
1	PEOZZ	5120006772259	33287	J8092	HANDLE,DRIVE TRANSMISSION,BOI: SEE PARA. 5.I, PART OF KIT P/N 57K0267.	
2	PEHZZ	5180011959777	33287	J21465-01	TOOL SET,BUSHING,SE TRANSMISSION, BOI: SEE PARA. 5.I, PART OF KIT P/N 57K0266.....	
3	PEHZZ	4910011780722	25341	J-21370	GAGE,PIN SELECTOR BAND APPLY,BOI: SEE PARA. 5.I, PART OF KIT P/N 57K0266.....	
4	PEHZZ	5120011308865	33287	J6471-2	HANDLE,SLIDE HAMMER SLIDE HAMMER, 5/8-16, 3/8-16,BOI: SEE PARA. 5.I, PART OF KIT P/N 57K0266.....	
5	PEFZZ	5120011761845	25341	J21359-A	INSTALLER,OIL SEAL TRANSMISSION OIL PUMP,BOI: SEE PARA. 5.I, PART OF KIT P/N 57K0268.....	
6	PEHZZ	4910012090729	33287	J24396	TOOL,ALIGNMENT,CLUT INTERMEDIATE, BOI: SEE PARA. 5.I, PART OF KIT P/N 57K0266.....	

END OF FIGURE

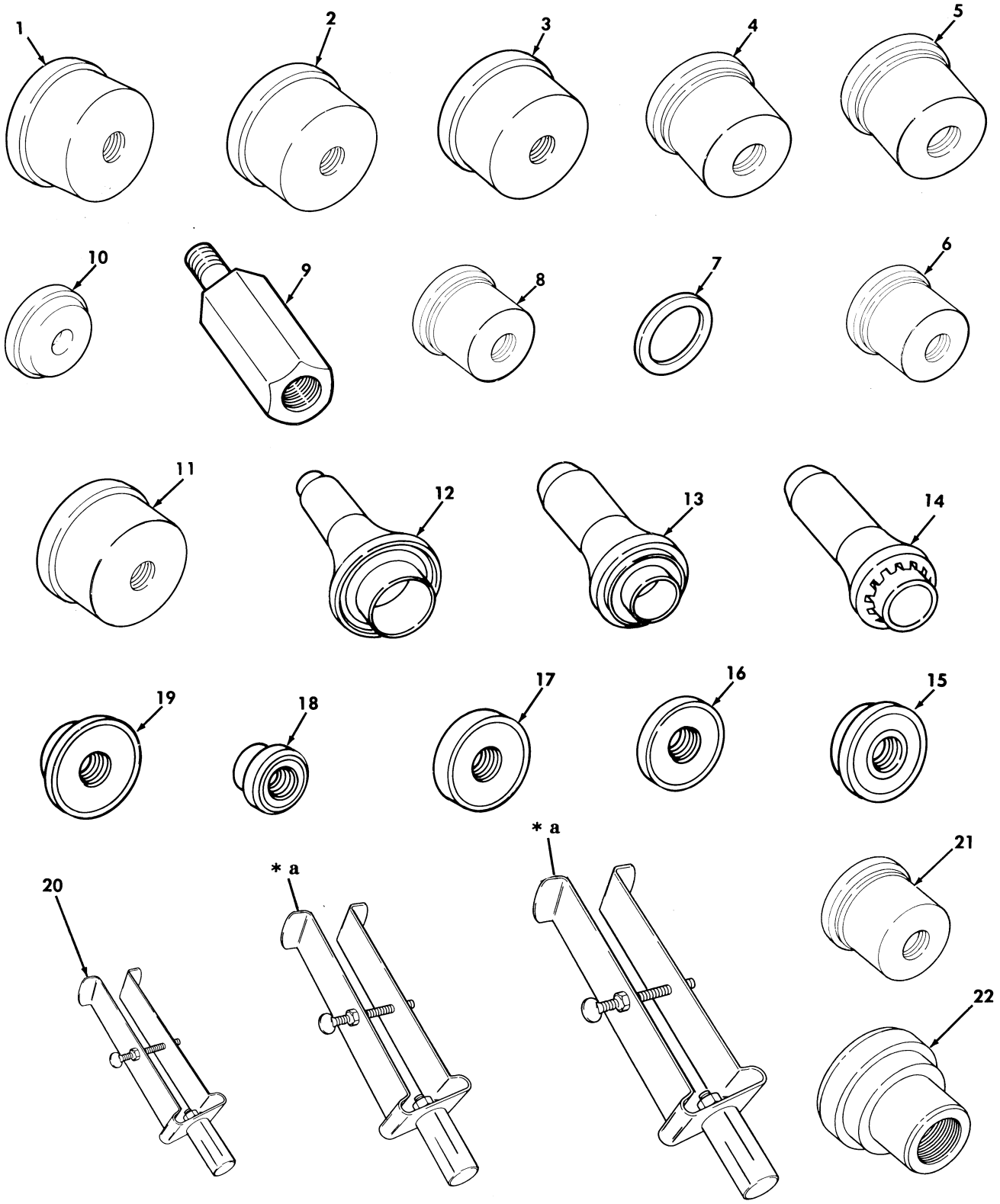

* a PART OF ITEM 20

Figure 501. Special Tools, Transfer Case.

(1) ITEM NO	(2) SMR CODE	(3) NSN	(4) CAGEC	(5) PART NUMBER	(6) DESCRIPTION AND USABLE ON CODES(UOC)	(7) QTY
					GROUP 2604 SPECIAL TOOLS	
					FIG. 501 SPECIAL TOOLS,TRANSFER CASE	
1	PEHZZ	5120011960084	33287	J29166	INSERTER,BEARING AN REAR OUTPUT, BOI: SEE PARA. 5.I, PART OF KIT P/N 57K0266.....	
2	PEHZZ	5120011694876	25341	J-29168	INSERTER,BEARING AN FRONT OUTPUT, BOI: SEE PARA. 5.I, PART OF KIT P/N 57K0266.....	
3	PEHZZ	5120011703278	25341	J-29167	INSERTER,BEARING AN BOI: SEE PARA. 5.I,PART OF KIT P/N 57K0266.....	
4	PEHZZ	5120011952721	33287	J29163	INSERTER,BEARING AN FRONT OUTPUT SHAFT REAR BEARING,BOI: SEE PARA. 5.I, PART OF KIT P/N 57K0266.....	
5	PEHZZ	5120011857955	33287	J29169	INSERTER,BEARING AN INPUT GEAR,BOI: SEE PARA. 5.I, PART OF KIT P/N 57K0266.....	
6	PEHZZ	5120012654872	33287	J-35307	INSERTER,BEARING AN MAINSHAFT,BOI: SEE PARA. 5.I, PART OF KIT P/N 57K0266.....	
7	PEHZZ	5120012476629	33287	J29185-2	INSTALLER,ANNULUS B ANNULUS GEAR BUSHING,BOI: SEE PARA. 5.I, ...	
8	PEHZZ	5120011857956	33287	J29185	INSERTER,BEARING AN BOI: SEE PARA. 5.I PART OF KIT P/N 57K0266...	
9	PEHZZ	5120013915131	33287	J6471-8	ADAPTER MECHANIAL SLIDE HAMMER,5/8-18 1/2-13,BOI: SEE PARA. 5.I,PART OF KIT P/N 57K0266.....	
10	PEHZZ	5120011858024	33287	J7818	INSERTER,BEARING AN RETAINER,BOI: SEE PARA. 5.I, PART OF KIT P/N 57K0266.....	
11	PEHZZ	5120011954551	33287	J29170	REMOVER,BEARING INPUT GEAR,BOI: SEE PARA. 5.I, PART OF KIT P/N 57K0266.....	
12	PEHZZ	5120013573632	33287	J-33831	INSERTER,SEAL INPUT GEAR SEAL,BOI: SEE PARA. 5.I PART OF KIT P/N 57K0266.....	
13	PEHZZ	5120012271680	33287	J-22661	INSTALLER,SEAL OUTPUT SHAFT,BOI: SEE PARA. 5.I,PART OF KIT P/N 57K0236,PART OF KIT P/N 57K0268.....	
14	PEHZZ	5120013613101	33287	J-33843	INSERTER,SEAL EXTENSION HOUSING SEAL,BOI: SEE PARA. 5.I. PART OF KIT P/N 57K0236 PART OF KIT P/N 57K0266	
15	PEHZZ	5120013573633	33287	J-33826	INSERTER AND REMOVE BEARING INSTALLER,BOI: SEE PARA. 5.I. PART OF KIT P/N 57K0236 PART OF KIT P/N 57K0266.....	
16	PEHZZ	5120013573629	33287	J-33829	INSERTER,BEARING AN MAINSHAFT PILOT BEARING,BOI: SEE PARA. 5.I. PART OF KIT P/N 57K0236.....	
17	PEHZZ	5120013573630	33287	J-33833	INSERTER,BEARING AN OUTPUT SHAFT FRONT BEARING,BOI: SEE PARA. 5.I. PART OF KIT P/N 57K0236 PART OF KIT	

(1) ITEM NO	(2) SMR CODE	(3) NSN	(4) CAGEC	(5) PART NUMBER	(6) DESCRIPTION AND USABLE ON CODES(UOC)	(7) QTY
					P/N 57K0266.....	
18	PEHZZ	5120013573631	33287	J-33839	REMOVER,BEARING AND EXTENSION HOUSING BUSHING,BOI: SEE PARA. 5.I. PART OF KIT P/N 57K0236 PART OF KIT P/N 57K0266.....	
19	PEHZZ	5120013579123	33287	J-9276-3	INSERTER,BEARING AN BOI: SEE PARA. 5.I. PART OF KIT P/N 57K0236 PART OF KIT P/N 57K0266.....	
20	PEHZZ	5120012017857	33287	J29369	PULLER,MECHANICAL UNIVERSAL BUSHING AND BEARING,BOI: SEE PARA. 5.I, PART OF KIT P/N 57K0266.....	
21	PEHZZ	5120011857960	33287	J29174	INSERTER,BEARING AN BOI: SEE PARA. 5.1 PART OF KIT P/N 57K0266.....	
22	PEHZZ	5120013899992	33287	J39636	INSERTER,BEARING AN BOI: SEE PARA. 5.1, PART OF KIT P/N 57K0236 PART OF KIT P/N 57K0266.....	

END OF FIGURE

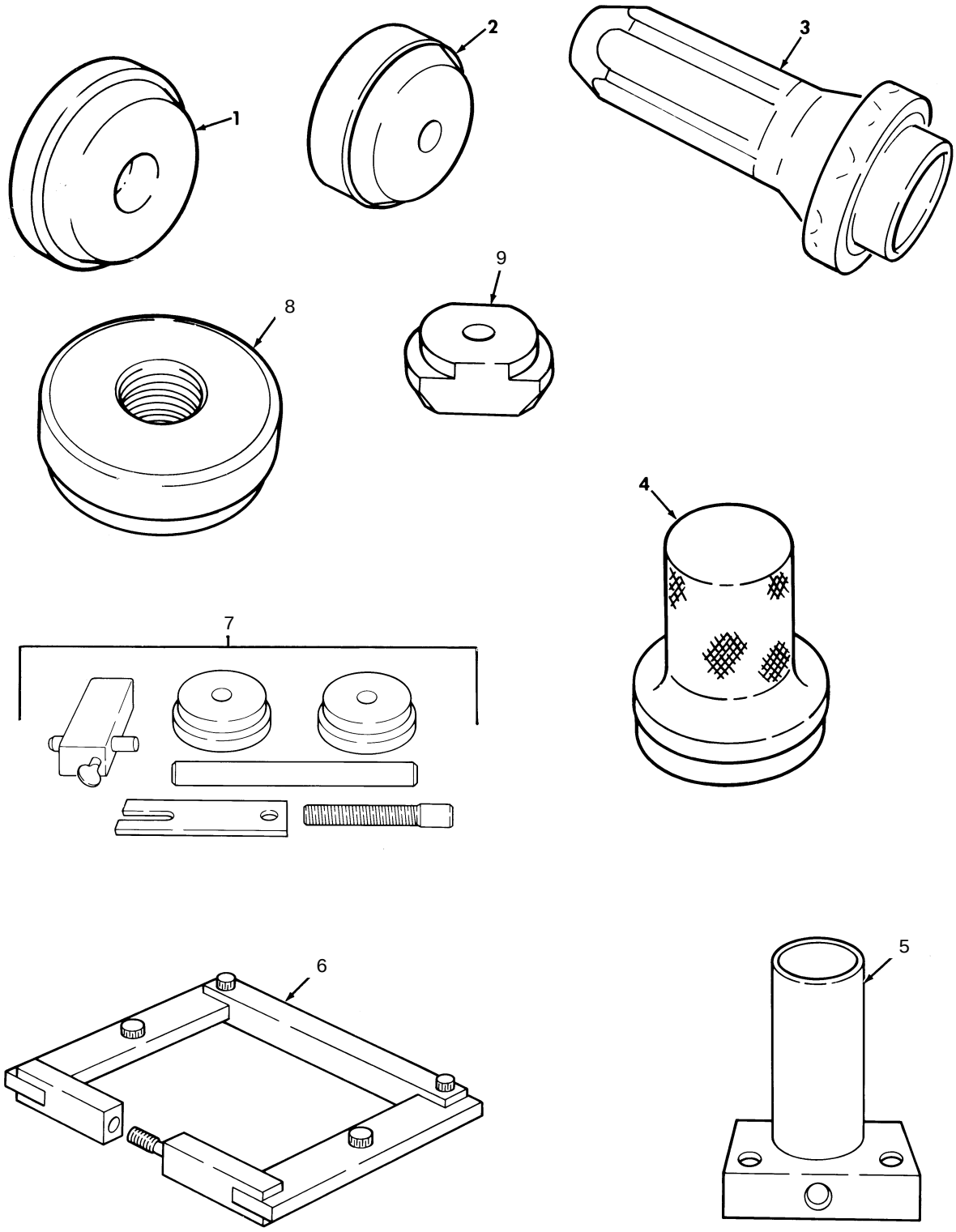

Figure 502. Special Tools, Axle Differential.

(1) ITEM NO	(2) SMR CODE	(3) NSN	(4) CAGEC	(5) PART NUMBER	(6) DESCRIPTION AND USABLE ON CODES(UOC)	(7) QTY
					GROUP 2604 SPECIAL TOOLS	
					FIG. 502 SPECIAL TOOLS,AXLE DIFFERENTIAL	
1	PEHZZ	5120011873660	33287	J21787	REMOVER,BEARING AND BOI: SEE PARA. 5.I PART OF KIT P/N 57K0266.....	
2	PEHZZ	5120011857964	33287	J8611-01	INSERTER,BEARING AN BOI: SEE PARA. 5.I PART OF KIT P/N 57K0266.....	
3	PEFZZ	4910011795530	25341	J-29162	DRIVE TOOL,SEAL BOI: SEE PARA 5.I PART OF KIT P/N 57K0268.....	
4	PEFZZ	5120011873659	33287	J33142	INSERTER,BEARING AN BOI: SEE PARA. 5.I PART OF KIT P/N 57K0268.....	
5	PEHZZ	5120012188235	33287	J-33149-A	ADAPTER,AXLE FIXTUR PART OF KIT P/N 57K0266.....	
6	PEHZZ	4910001052823	80604	W-129-B	SPREADER,AXLE HOUSI PART OF KIT P/N 57K0266.....	
7	PEHZZ	5180012168643	33287	J-35199	TOOL KIT,PINION SETTING GAUGE,BOI: SEE PARA. 5.I,PART OF KIT P/N 57K0266.....	
8	PEHZZ	5120011857962	33287	J8608	INSERTER,BEARING AN PART OF KIT P/N 57K0266.....	
9	PEHZZ	5120011857957	33287	J21786	REMOVER,BEARING AND PART OF KIT P/N 57K0266.....	

END OF FIGURE

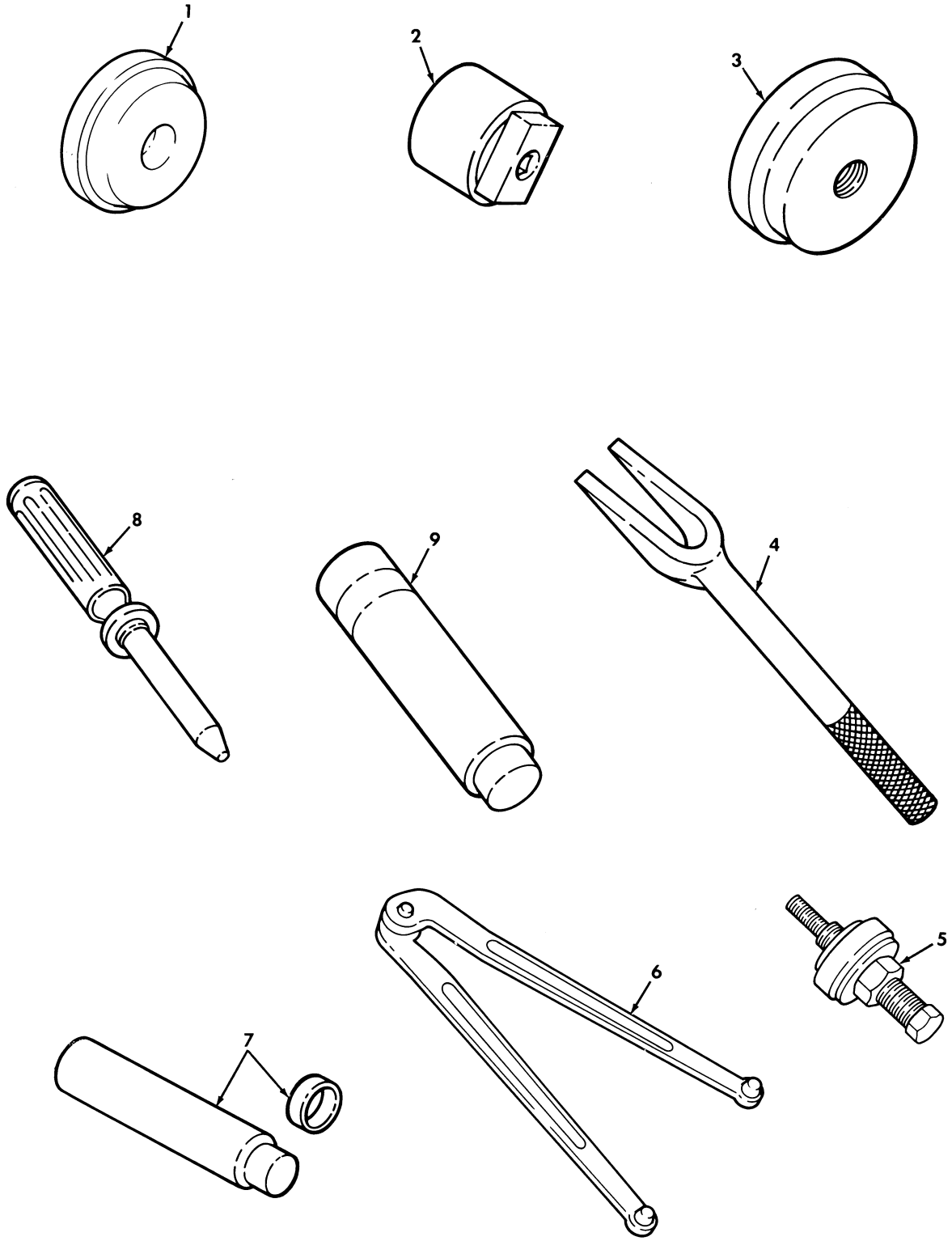

Figure 503. Special Tools, Geared Hub and Steering.

(1) ITEM NO	(2) SMR CODE	(3) NSN	(4) CAGEC	(5) PART NUMBER	(6) DESCRIPTION AND USABLE ON CODES(UOC)	(7) QTY
					GROUP 2604 SPECIAL TOOLS	
					FIG. 503 SPECIAL TOOLS,GEARED HUB AND STEERING	
1	PEOZZ	5120011873607	33287	J33143	INSERTER,SEAL GEARED HUB INPUT,BOI: SEE PARA. 5.I, PART OF KIT P/N 57K0267.....	
2	PEOZZ	5120011857963	33287	J33144	SOCKET,SOCKET WRENC GEARED HUB,BOI: SEE PARA. 5.I, PART OF KIT P/N 57K0267.....	
3	PEOZZ	5120012290842	33287	J35184	INSERTER,SEAL GEARED HUB,BOI: SEE PARA. 5.I, PART OF KIT P/N 57K0267.	
4	PEOZZ	5120008804268	19207	11595179	REMOVAL TOOL,TIE RO BALL JOINTS, BOI: SEE PARA. 5.I, PART OF KIT P/N 57K0267.....	
5	PEOZZ	4910011792517	33287	J25033-B	INSTALLER,POWER STE POWER STEERING PUMP PULLEY,BOI: SEE PARA. 5.I PART OF KIT P/N 57K0267.....	
6	PEFZZ	5120010826436	25341	J7624	WRENCH,SPANNER PRELOAD BEARING STEERING GEAR,BOI: SEE PARA. 5.I, PART OF KIT P/N 57K0268.....	
7	PEFZZ	5120010826447	25341	J-6278	INSTALLING AND REMO PITMAN SHAFT BEARING,BOI: SEE PARA. 5.I, PART OF KIT P/N 57K0268.....	
8	PEFZZ	5120011791032	33287	J-21552	PUNCH,HAND TOOL RACK PISTON STEERING GEAR,BOI: SEE PARA. 5.I, PART OF KIT P/N 57K0268.....	
9	PEFZZ	5120011857965	33287	J-6221	REMOVER,BEARING BEARING ADJUSTER PLUG,BOI: SEE PARA. 5.I,PART OF KIT P/N 57K0268.....	

END OF FIGURE

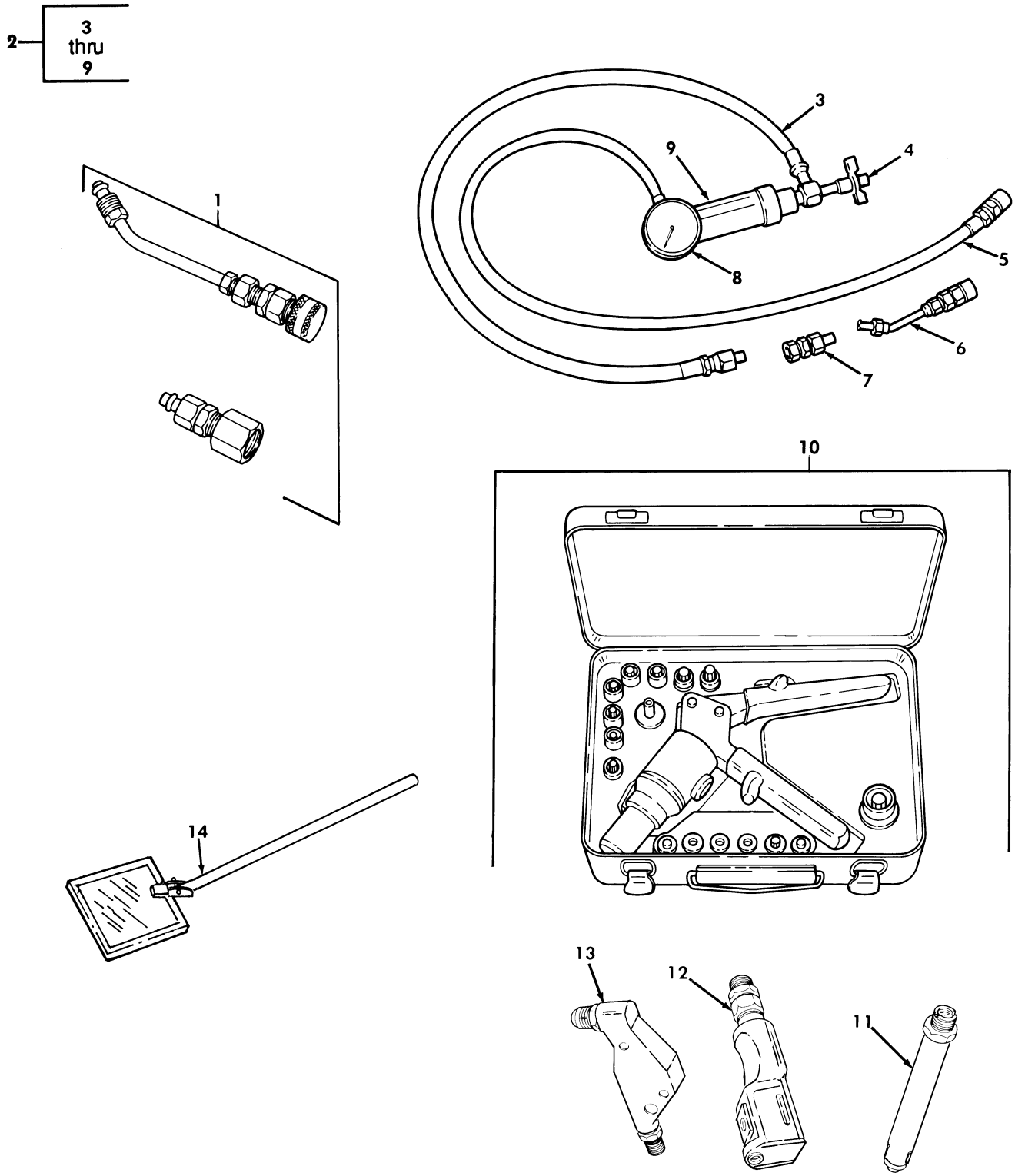

Figure 504. Special Tools, Steering Pump Body, and Speedometer Drive.

(1) ITEM NO	(2) SMR CODE	(3) NSN	(4) CAGEC	(5) PART NUMBER	(6) DESCRIPTION AND USABLE ON CODES(UOC)	(7) QTY
					GROUP 2604 SPECIAL TOOLS	
					FIG. 504 SPECIAL TOOLS,STEERING PUMP,BODY,AND SPEEDOMETER DRIVE	
1	PEOZZ	5120012311709	33287	J33141	ADAPTER,ANALYZER BOI: SEE PARA. 5.I PART OF KIT P/N 5705568.....	
2	PEOOO	4910011857966	19207	12342943	ANALYZER,POWER STEE BOI:SEE PARA. 5.I PART OF KIT P/N 57K0267.....	
3	PEOZZ	4720012532809	33287	J25323-17	.HOSE ASSEMBLY,NONME BOI: SEE PARA. 5.I PART OF KIT P/N 12342943..	
4	PEOZZ	4820012526169	33287	J25323-16	.VALVE,REGULATING,FL BOI: SEE PARA. 5.I PART OF KIT P/N 12342943..	
5	PEOZZ	4720012532810	33287	J25323-18	.HOSE ASSEMBLY,NONME BOI: SEE PARA. 5.I PART OF KIT P/N 12342943..	
6	PEOZZ	4730012546023	33287	J25323-2	.COUPLING HALF,QUICK BOI: SEE PARA. 5.1 PART OF KIT P/N 12342943..	
7	PEOZZ	3020012552906	33287	J25323-1	.ADAPTER,GEAR BOI: SEE PARA. 5.I PART OF KIT P/N 12342943.....	
8	PEOZZ	6685012563406	33287	J25323-5	.GAGE,PRESSURE,DIAL BOI: SEE PARA. 5.I PART OF KIT P/N 12342943.....	
9	PEOZZ	6680012536782	33287	J25323-7	.INDICATOR,RATE OF F BOI: SEE PARA. 5.I PART OF KIT P/N 12342943..	
10	PEOZZ	5180012014978	64878	D100-MIL-1	TOOL KIT,BLIND RIVE BOI: SEE PARA. 5.I, PART OF KIT P/N 57K0267.....	
11	PEFZZ	5130011045370	11815	H749A-456	PULLING HEAD,RIVET BOI: SEE PARA. 5.I,PART OF KIT P/N 57K0268.....	
12	PEFZZ	5130010447196	53551	RU818	PULLING HEAD,RIVET BOI: SEE PARA. 5.I,PART OF KIT P/N 57K0268.....	
13	PEFZZ	5130010453507	53551	RU817	PULLING HEAD,RIVET RIGHT ANGLE,BOI: SEE PARA. 5.I,PART OF KIT P/N 57K0268.....	
14	PEOZZ	5120006186902	77335	71-510	MIRROR,INSPECTION SPEEDOMETER DRIVE,BOI: SEE PARA.5.I, PART OF KIT P/N 57K0267.....	

END OF FIGURE

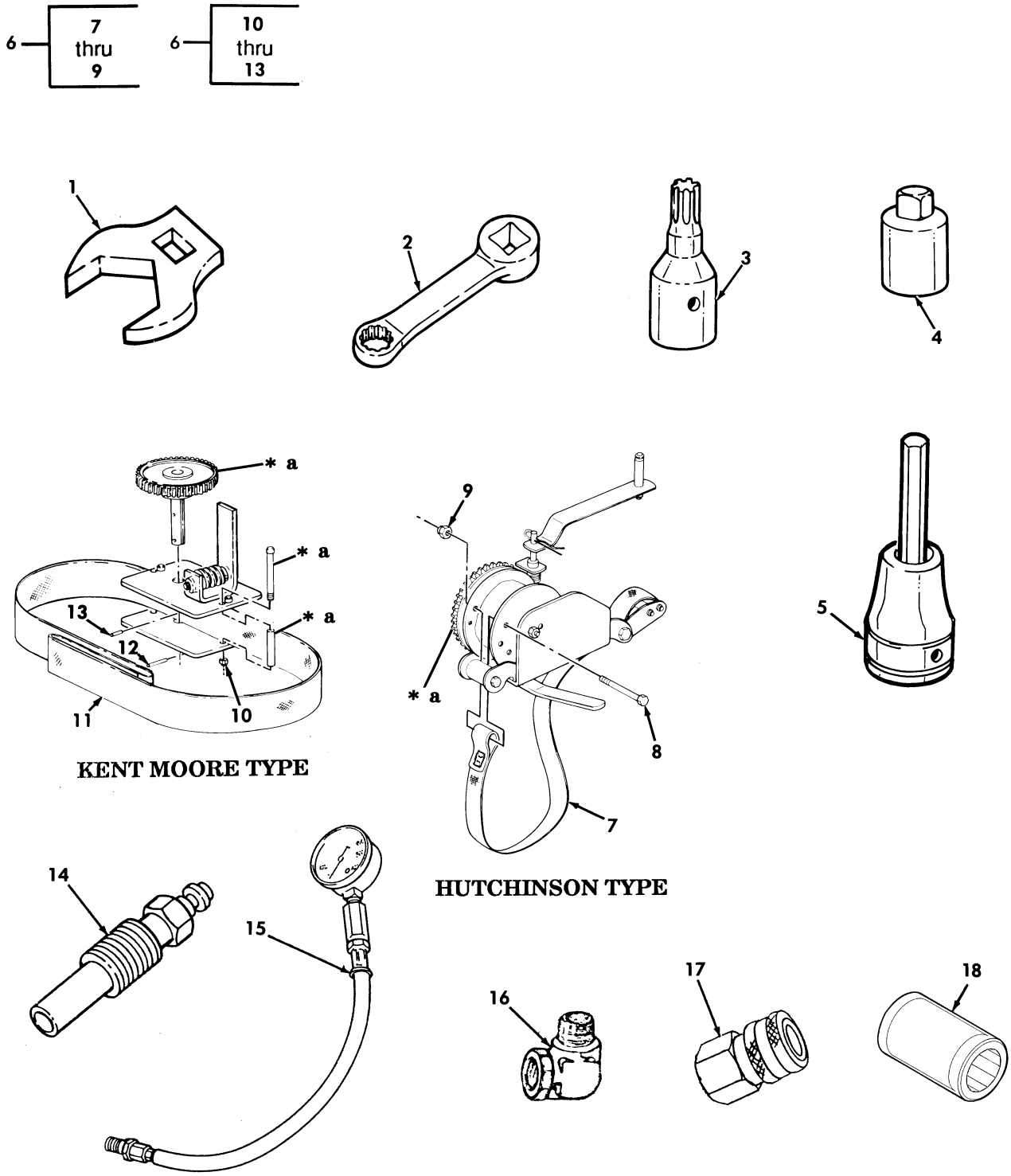

* a PART OF ITEM 6

Figure 505. Special Tools, Multipurpose.

(1) ITEM NO	(2) SMR CODE	(3) NSN	(4) CAGEC	(5) PART NUMBER	(6) DESCRIPTION AND USABLE ON CODES(UOC)	(7) QTY
					GROUP 2604 SPECIAL TOOLS	
					FIG. 505 SPECIAL TOOLS,MULTIPURPOSE	
1	PEOZZ	5120013351094	55719	FC18B	CROWFOOT ATTACHMENT 9/16, 3/8 DRIVE,BOI: SEE PARA. 5.I PART OF KIT P/N 57K0267.....	
1	PEOZZ	5120013351096	55719	FC22A	CROWFOOT ATTACHMENT 11/16,3/8 DRIVE,BOI: SEE PARA.5.I, PART OF KIT P/N 57K0267.....	
1	PEOZZ	5120013351099	55719	FC28B	CROWFOOT ATTACHMENT 7/8,3/8 DRIVE, BOI: SEE PARA.5.I, PART OF KIT P/N 57K0267.....	
1	PEOZZ	5120010798023	33287	J-35158	CROWFOOT ATTACHMENT 1/2,3/8 DRIVE, BOI: SEE PARA. 5.I, PART OF KIT P/N 57K0267.....	
1	PEOZZ	5120013351100	55719	FC30B	CROWFOOT ATTACHMENT 15/16,3/8 DRIVE,BOI: SEE PARA.5.I, PART OF KIT P/N 57K0267.....	
1	PEOZZ	5120001848398	55719	AN8506-4	CROWFOOT ATTACHMENT 5/8,3/8 DRIVE, BOI: SEE PARA.5.I, PART OF KIT P/N 57K0267.....	
2	PEOZZ	5120013673582	55719	SRES18	ADAPTER,TORQUE WREN 9/16,BOI: SEE PARA.5.I, PART OF KIT P/N 57K0267..	
2	PEOZZ	5120013673585	55719	SRES24	ADAPTER,TORQUE WREN 3/4,BOI: SEE PARA.5.I, PART OF KIT P/N 57K0267..	
3	PEFZZ	5120012273159	33234	TLE60	SOCKET,SOCKET WRENC 1/4 DRIVE,BOI: SEE PARA.5.I, PART OF KIT P/N 57K0268.....	
4	PEOZZ	5120002408702	19207	11655788-2	ADAPTER,SOCKET WREN 3/8 DRIVE TO 1/2 DRIVE,BOI: SEE PARA.5.I, PART OF KIT P/N 57K0267.....	
5	PEOZZ	5120006838597	96508	TW6B	DRIVER,HEXAGON HEAD 3/16,3/8 DRIVE, BOI: SEE PARA. 5.I,PART OF KIT P/N 57K0267.....	
5	PEOZZ	5120014373658	55719	FAM7E	DRIVER,HEXAGON HEAD 7 MM,3/8 DRIVE, BOI: SEE PARA. 5.I,PART OF KIT P/N 57K0267.....	
6	PEOZZ	5120013355847	19207	12342688	RUNFLAT TOOL COMPRESSION,BOI: SEE PARA. 5.I,PART OF KIT P/N 57K0267...	
7	KFOZZ		62161	528236-05	.STRAP ASSEMBLY RUNFLAT TOOL BOI: SEE PARA. 5.I,PART OF KIT P/N 528240	
8	KFOZZ		62161	1118BAC1048	.BOLT BOI: SEE PARA. 5.I,PART OF KIT P/N 528240.....	
9	KFOZZ		62161	1351BAC10SL	.NUT,SELF-LOCKING RUNFLAT TOOL BOI: SEE PARA. 5.I,PART OF KIT P/N 528240	
10	KFOZZ		33287	RS-3400-135	.HEXAGON LOCKNUT BOI: SEE PARA. 5.I PART OF KIT P/N J-39295.....	
11	KFOZZ		33287	J-39250-1	.STRAP ASSEMBLY BOI: SEE PARA. 5.I, PART OF KIT P/N J-39295.....	
12	KFOZZ		33287	RS-5701-795	.PIN,SMALL BOI: SEE PARA. 5.I,PART OF KIT P/N J-39295.....	
13	KFOZZ		33287	RS-700-125	.PIN,SHAFT BOI: SEE PARA. 5.I,PART	

(1) ITEM NO	(2) SMR CODE	(3) NSN	(4) CAGEC	(5) PART NUMBER	(6) DESCRIPTION AND USABLE ON CODES(UOC)	(7) QTY
					OF KIT P/N J-39295.....	
14	PEFZZ	4910012382551	33287	J26999-30	ADAPTER,CYLINDER CO BOI: SEE PARA.5.1 PART OF KIT P/N 57K0268.... UOC:HVY,H11,H13,H14,H15,H16,H17,H18, H20,H21,H24,H25,H26,H27,H28	
15	PEFZZ	4910007856437	33287	J6692	TESTER,CYLINDER COM CYLINDER COMPRESSION,BOI: SEE PARA.5.1 PART OF KIT P/N 57K0268.....	
16	PEFZZ	4730009854804	96906	MS51815-4P	ELBOW,PIPE TO TUBE BOI: SEE PARA.5.1 PART OF KIT P/N 57K0268....	
17	PEFZZ	4730010425266	33287	J-35209	COUPLING BOI: SEE PARA. 5.I,PART OF KIT P/N 57K0267.....	
18	PEOZZ	5120002771463	2K880	FVS121	SOCKET,SOCKET WRENCH 3/8,3/8 DRIVE DEEPWELL,BOI: SEE PARA. 5.I,PART OF KIT P/N 57K0267.....	
	PAOZZ	2530013383056	33287	J-39295	REPAIR KIT,BELT RUNFLAT.....	
	PAOZZ	4310013455723	62161	528240	REPAIR KIT,BELT RUNFLAT.....	

END OF FIGURE

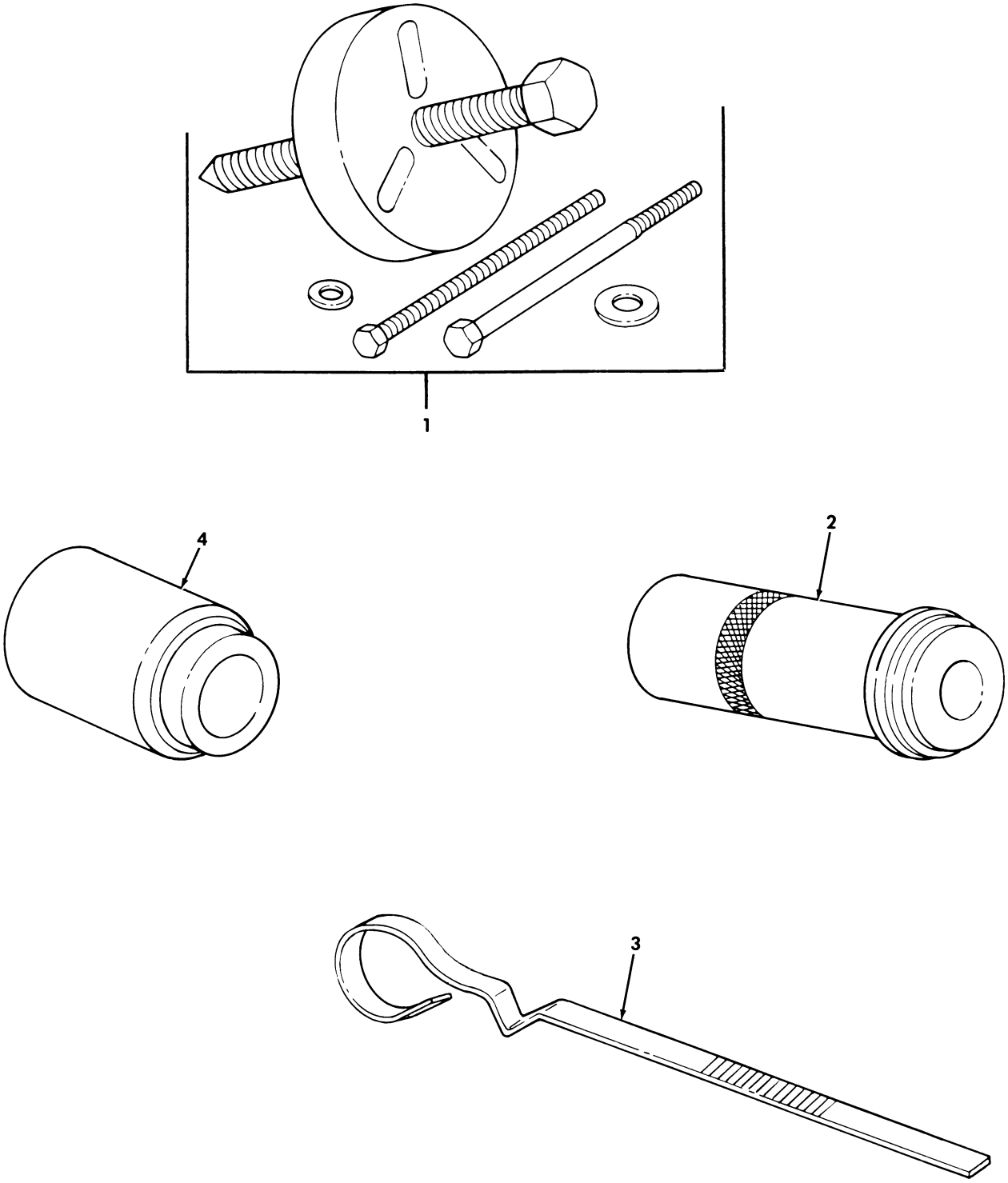

Figure 506. Special Tools, Air Conditioner Compressor.

(1) ITEM NO	(2) SMR CODE	(3) NSN	(4) CAGEC	(5) PART NUMBER	(6) DESCRIPTION AND USABLE ON CODES(UOC)	(7) QTY
					GROUP 2604 SPECIAL TOOLS	
					FIG. 506 SPECIAL TOOLS,AIR CONDITIONER COMPRESSOR	
1	PEFZZ	5120013734982	25341	43305	PULLER,MECHANICAL PART OF KIT P/N J-29642-C.....	
2	PEFZZ	5120013734989	25341	42109	INSERTER AND REMOVE PULLEY BEARING, PART OF IT P/N J-29642-C.....	
3	PEFZZ	6680013725748	25341	41102	GAGE ROD,LIQUID LEV PART OF KIT P/N J-29642-C.....	
4	PEFZZ	5120013735985	25341	43204	PILOT,PULLER PART OF KIT P/N J-29642-C.....	

END OF FIGURE

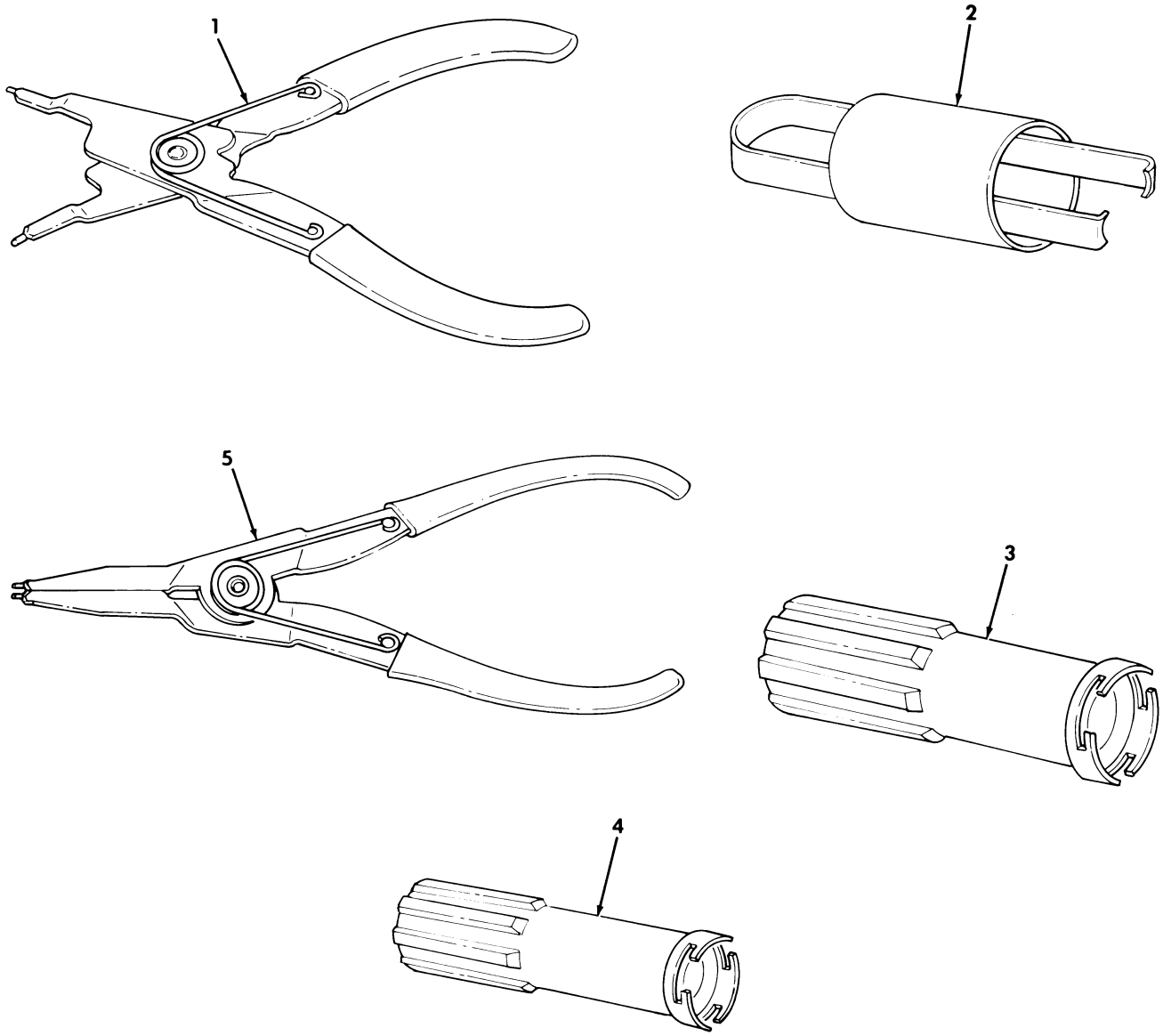

Figure 507. Special Tools, Air Conditioner Compressor.

(1) ITEM NO	(2) SMR CODE	(3) NSN	(4) CAGEC	(5) PART NUMBER	(6) DESCRIPTION AND USABLE ON CODES(UOC)	(7) QTY
					GROUP 2604 SPECIAL TOOLS	
					FIG. 507 SPECIAL TOOLS,AIR CONDITIONER COMPRESSOR	
1	PEFZZ	5120013734979	25341	40210	PLIERS,RETAINING RI INTERNAL SNAP-RING,SMALL,PART OF KIT P/N J-29642-C	
1	PEFZZ	5120013734980	85688	3R	PLIERS,RETAINING RI INTERNAL SNAP-RING,LARGE,PART OF KIT P/N J-29642-C	
2	PEFZZ	5120013738836	25341	42106	REMOVER,SEAL SEAT,PART OF KIT P/N J-29642-C.....	
3	PEFZZ	5120013734987	25341	43205	INSERTER AND REMOVE SEAL,PART OF KIT P/N J-29642-C.....	
4	PEFZZ	5120013734988	25341	43501	INSERTER AND REMOVE SEAL,PART OF KIT P/N J-29642-C.....	
5	PEFZZ	5120013734981	53800	9-46948	PLIERS,RETAINING RI EXTERNAL SNAP-RING,PART OF KIT P/N J-29642-C.....	

END OF FIGURE

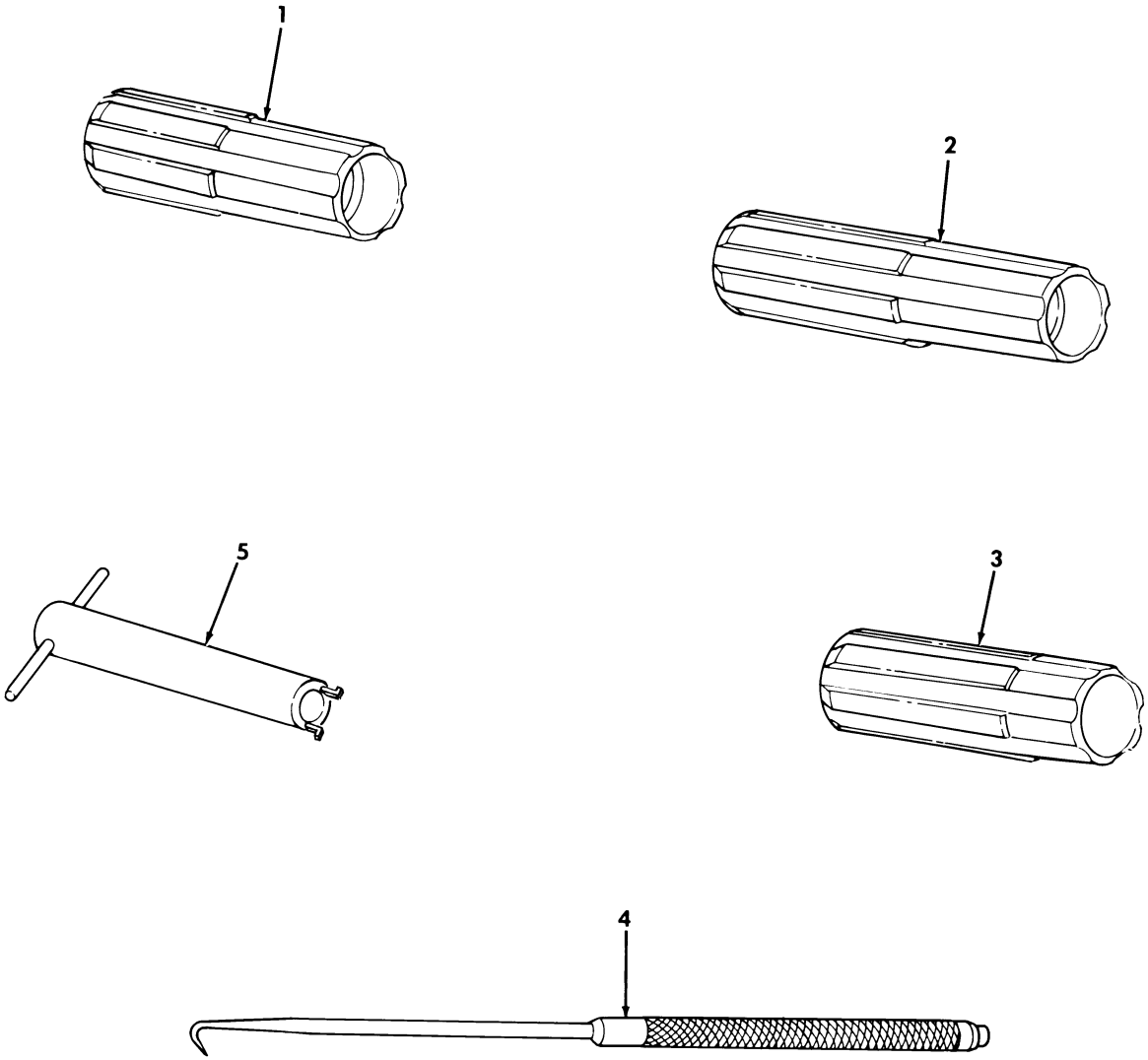

Figure 508. Special Tools, Air Conditioner Compressor.

(1) ITEM NO	(2) SMR CODE	(3) NSN	(4) CAGEC	(5) PART NUMBER	(6) DESCRIPTION AND USABLE ON CODES(UOC)	(7) QTY
					GROUP 2604 SPECIAL TOOLS	
					FIG. 508 SPECIAL TOOLS,AIR CONDITIONER COMPRESSOR	
1	PEFZZ	5120013738840	25341	43210	INSTALLATION TOOL,R SEAL/SEAT,PART OF KIT P/N J-29642-C.....	
2	PEFZZ	5120013734985	25341	42124	INSERTER,PREFORMED SNAP-RING,PART OF KIT P/N J-29642-C.....	
3	PEFZZ	5120013735983	25341	42107	INSTALLER,SEAL SEAT,PART OF KIT P/N J-29642-C.....	
4	PEFZZ	5120013735984	25341	42113	PICK,MINIATURE O-RING AND SEAL,PART OF KIT P/N J-29642-C.....	
5	PEFZZ	5120013734984	25341	43208	REMOVER,SEAL PART OF KIT P/N J-29642-C.....	

END OF FIGURE

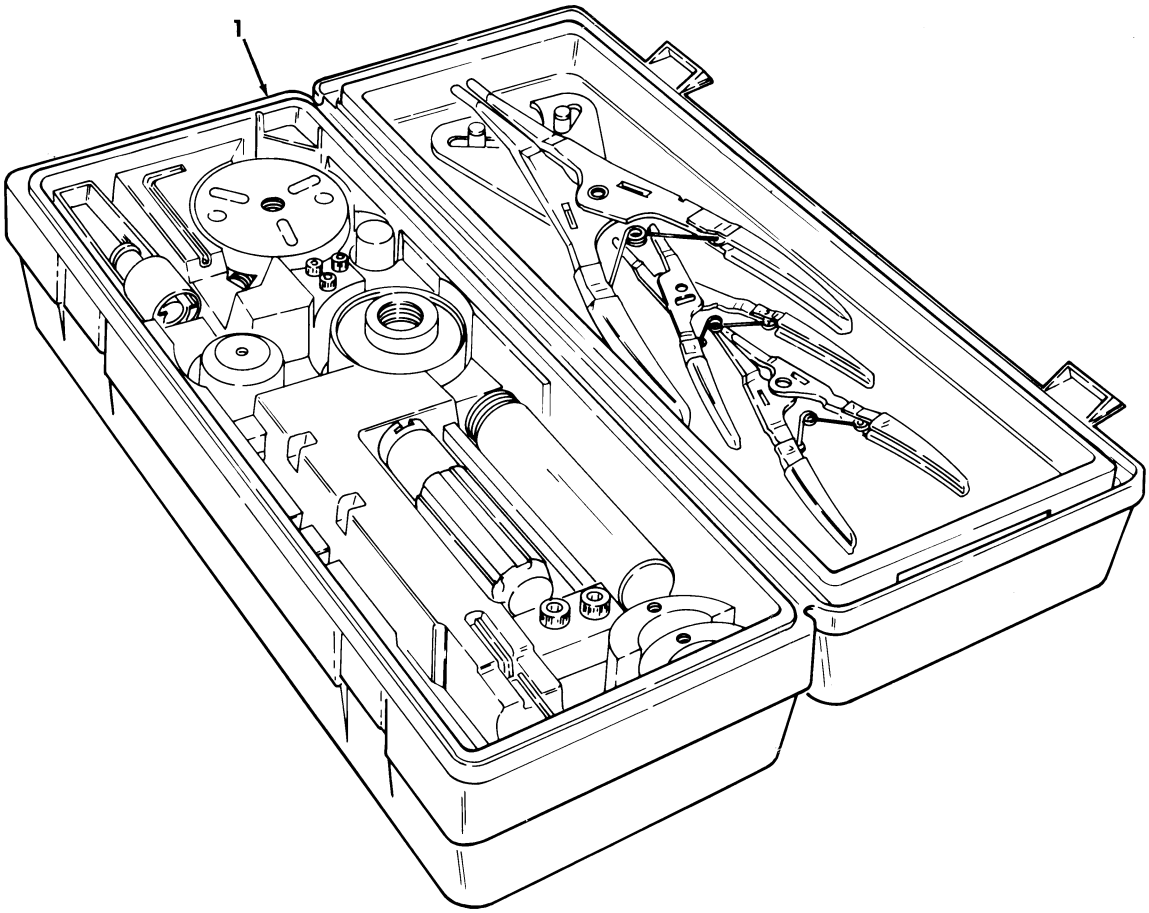

Figure 509. Special Tools, Air Compressor Tool Kit.

(1) ITEM NO	(2) SMR CODE	(3) NSN	(4) CAGEC	(5) PART NUMBER	(6) DESCRIPTION AND USABLE ON CODES(UOC)	(7) QTY
					GROUP 2604 SPECIAL TOOLS	
					FIG. 509 SPECIAL TOOLS,AIR CONDITIONER COMPRESSOR TOOL KIT	
1	PEFFF	5180012672907	25341	J-29642-C	TOOL KIT,COMPRESSOR AIR CONDITIONER COMPRESSOR,BOI:SEE PARA.5.I.....	

END OF FIGURE

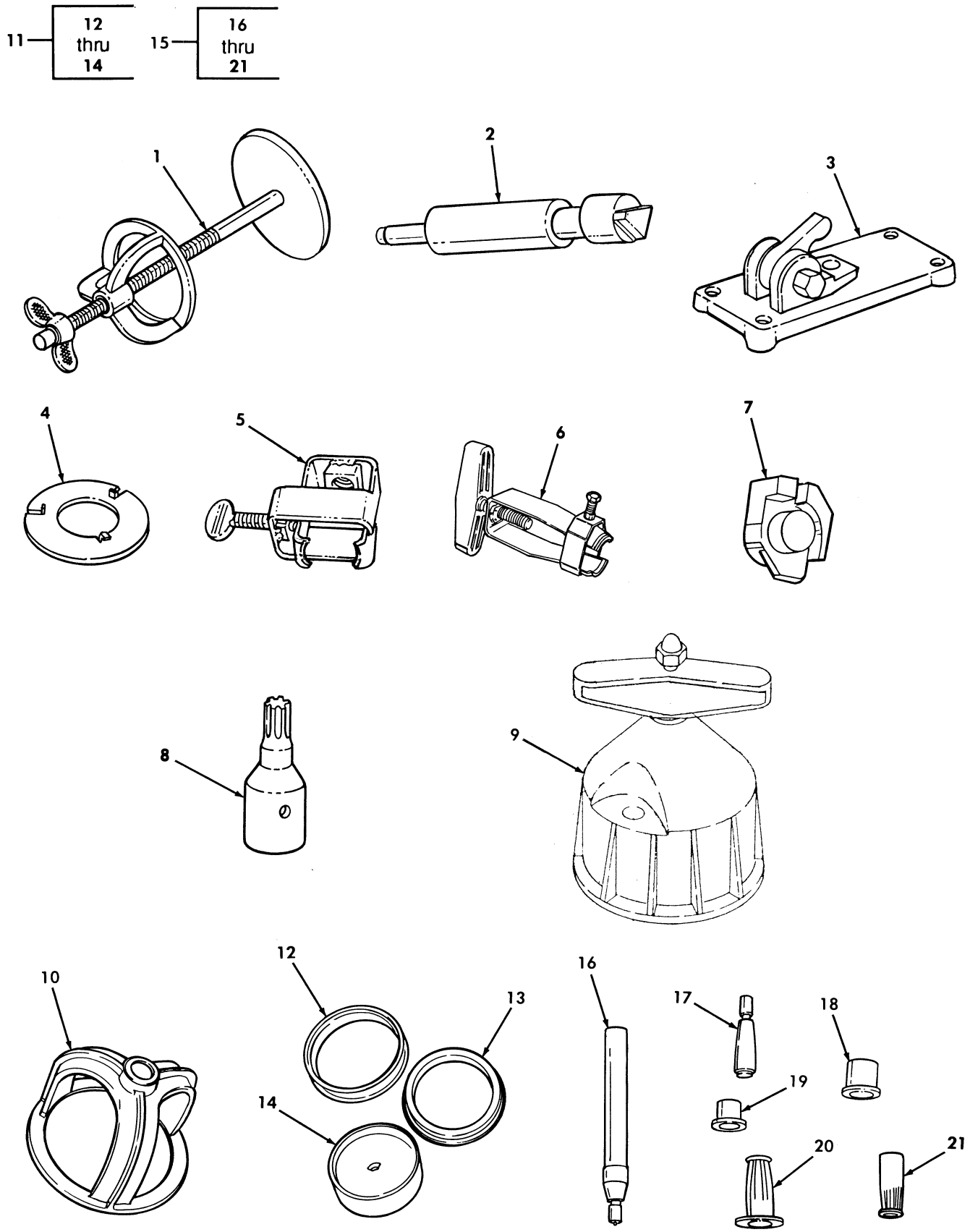

Figure 510. Special Tools, Transmission, Transfer Case, and Engine A2.

(1) ITEM NO	(2) SMR CODE	(3) NSN	(4) CAGEC	(5) PART NUMBER	(6) DESCRIPTION AND USABLE ON CODES(UOC)	(7) QTY
					GROUP 2604 SPECIAL TOOLS	
					FIG. 510 SPECIAL TOOLS,TRANSMISSION, TRANSFER CASE,AND ENGINE A2	
1	PEHZZ	4910011780724	33287	J-23327	COMPRESSOR,CLUTCH S BOI: SEE PARA. 5.I,PART OF KIT P/N 57K3218.....	
2	PEHZZ	5120014230032	33287	J-21370-10	GAUGE BAND TO APPLY PIN(USED WITH J-38737) BOI: SEE PARA.5.I,PART OF KIT P/N 57K3218.....	
3	PEHZZ	5120014221313	33287	J-38737	TOOL,TRANS BAND PIN BOI:SEE PARA.5.I PART OF KIT P/N 57K3218....	
4	PEHZZ	5120014108216	33287	J-25018-A	COMPRESSOR,CLUTCH S BOI:SEE PARA.5.I PART OF KIT P/N 57K3218....	
5	PEHZZ	5120014221300	33287	J-38868-A	TOOL,TRANS SHAFT GEAR UNIT ASSEMBLY BOI:SEE PARA.5.I PART OF KIT P/N 57K3218.....	
6	PEHZZ	5120014221308	33287	J-37789-A	TOOL,TRANS PUMP ASS BOI:SEE PARA.5.I PART OF KIT P/N 57K3218....	
7	PEHZZ	5120014221326	33287	J-38655	ADAPTER,TRANS FIXTU TRANSMISSION HOLDING FIXTURE BOI: SEE PARA.5.I PART OF KIT P/N 57K3218.....	
8	PEHZZ	5120013673536	55719	FTX40E	SCREWDRIVER ATTACHM BOI:SEE PARA.5.I PART OF KIT P/N 57K3218....	
9	PEHZZ	5120014220334	33287	J-39084	INSERTER,SEAL REAR CRANKSHAFT SEAL PART OF KIT P/N 57K3218.....	
10	PEHZZ	5120014221329	33287	J-38734	ADAPTER,TRANS CLUTC PISTON COMPRESSOR PART OF KIT P/N 57K3218..	
11	ADHHH	5180014220138	33287	J-38731	TOOL SET,TRANSMISSI BOI:SEE PARA.5.I PART OF KIT P/N 57K3218....	
12	PEHZZ	5120014220173	33287	J-38731-1	.PROTECTOR,SEAL,INNE.....	
13	PEHZZ	5120014220219	33287	J-38731-2	.PROTECTOR,SEAL,OUTE.....	
14	PEHZZ	5120014220139	33287	J-38731-3	.BASE,TRANS TOOL SET.....	
15	PEHHH	5120014087051	33287	J-38736-6	INSTALLATION TOOL,S BOI:SEE PARA.5.I PART OF KIT P/N 57K3218....	
16	PEHZZ	5120014221310	33287	J-38736-1	.LG SEAL RING PROTEC.....	
17	PEHZZ	5120014225406	33287	J-38736-2	.PROTECTOR,S RING,SM.....	
18	PEHZZ	5120014225411	33287	J-38736-3	.SIZER.....	
19	PEHZZ	5120014221318	33287	J-38736-4	.SM SIZER,TRANS SEAL.....	
20	PEHZZ	5120014221324	33287	J-38736-5	.LRG PUSHER,TRANSMIS.....	
21	PEHZZ	5120014087051	33287	J-38736	.INSTALLER,SEAL.....	

END OF FIGURE

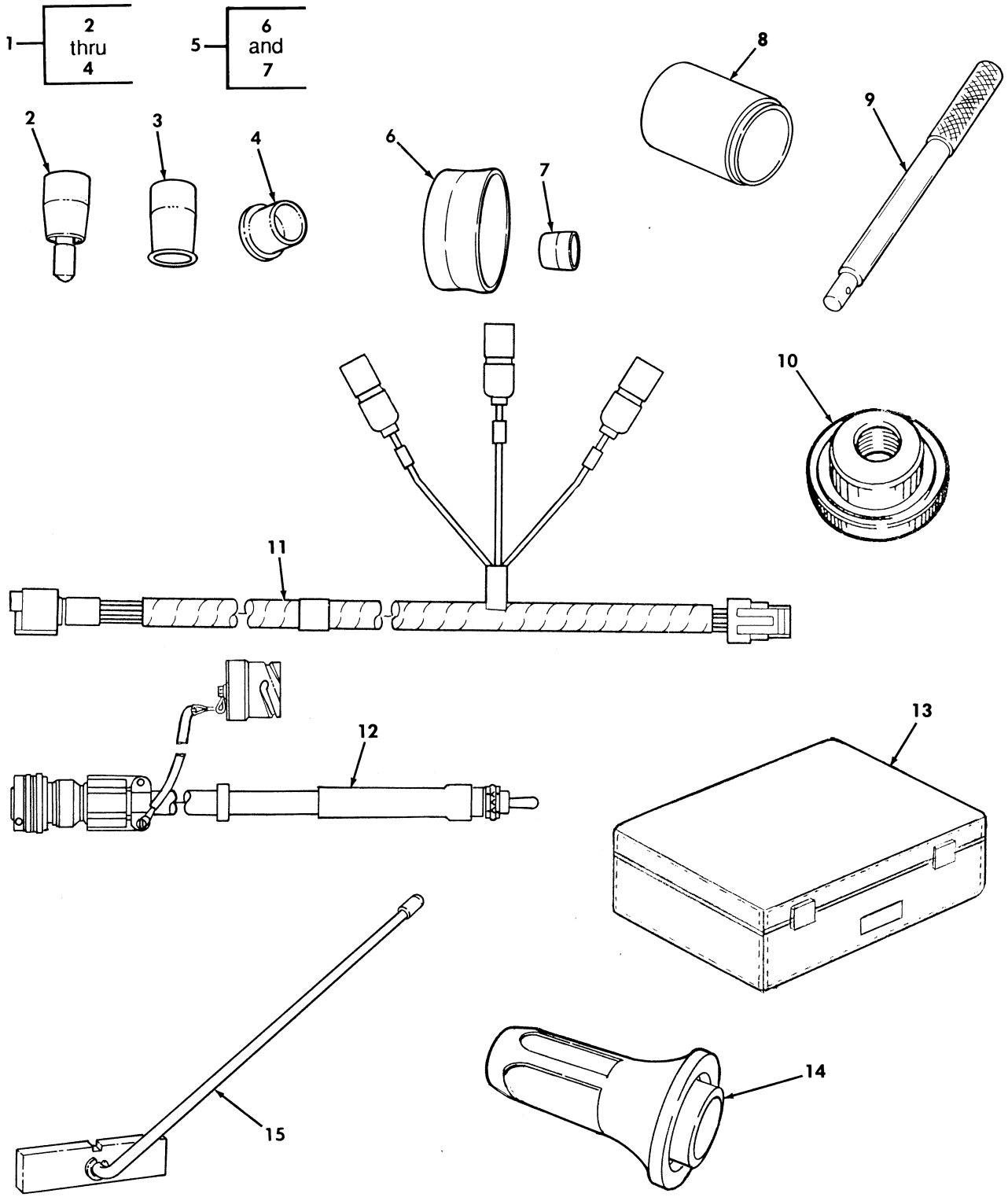

Figure 511. Special Tools, Transmission, Transfer Case, and Engine A2.

(1) ITEM NO	(2) SMR CODE	(3) NSN	(4) CAGEC	(5) PART NUMBER	(6) DESCRIPTION AND USABLE ON CODES(UOC)	(7) QTY
					GROUP 2604 SPECIAL TOOLS	
					FIG. 511 SPECIAL TOOLS,TRANSMISSION, TRANSFER CASE,AND ENGINE A2	
1	ADHHH	5180014221294	33287	J-38739	TOOL SET,TRANS PUMP BOI:SEE PARA.5.I PART OF KIT P/N 57K3218....	
2	PEHZZ	5120014221297	33287	J-38739-1	.PROTECTOR,TRANS PUM.....	
3	PEHZZ	5120014221302	33287	J-38739-2	.SIZER,TRANS PUMP AS.....	
4	PEHZZ	5120014221306	33287	J-38739-3	.PUSHER,TRANS PUMP A.....	
5	PEHZZ	5120014221301	33287	J-38732	TRANS SEAL PROTECTO BOI: SEE PARA.5.I PART OF KIT P/N 57K3218....	
6	PEHZZ	5120014221293	33287	J-38732-1	.PROTECTOR,TRANS SEA.....	
7	PEHZZ	4910011786551	25341	J-21362	.PROTECTOR,INNER SEA PART OF KIT P/N J-38732.....	
8	PEOZZ	5120014370480	80604	6888	INSERTER,SEAL BOI:SEE PARA.5.I PART OF KIT P/N 57K3219.....	
9	PEOZZ	5120010261666	80604	C-4171	HANDLE DRIVER BOI:SEE PARA.5.I PART OF KIT P/N 57K3219.....	
10	PEOZZ		33287	J-33832	REMOVER AND INSTALLER PART OF KIT P/N 57K3219.....	
11	PFOZZ	6150014127774	19207	12460120	CABLE ASSEMBLY,SPEC.....	
12	PEOZZ	6150014108215	19207	12460137	CABLE ASSEMBLY-SWIT DIAGNOSTIC SWITCH,BOI: SEE PARA. 5.1.....	
13	PEOZZ	5120014088173	19207	12460136	CASE,DIAGNOSTIC CAB DIAGOSTIC CABLE ASSEMBLY,BOI: SEE PARA. 5.1...	
14	PEOZZ	5120014141849	33287	J-38869	INSTALLER REAR EXTENSION SEAL,BOI: SEE PARA. 5.I,PART OF KIT P/N 57K3219.....	
15	PEOZZ	4820011794869	33287	J-33043	BLOCK,VALVE GAUGE BOI: SEE PARA. 5.I	
	ADHHH	5180014087050	19207	57K3218	TOOL KIT,VEHICULAR, REAR EXETNSION SEAL,BOI: SEE PARA. 5.I,PART OF KIT P/N 57K3219.....	
	ADOOO	5180014108467	19207	57K3219	TOOL KIT,VEHICULAR, REAR EXETNSION SEAL,BOI: SEE PARA. 5.I,PART OF KIT P/N 57K3218.....	

END OF FIGURE

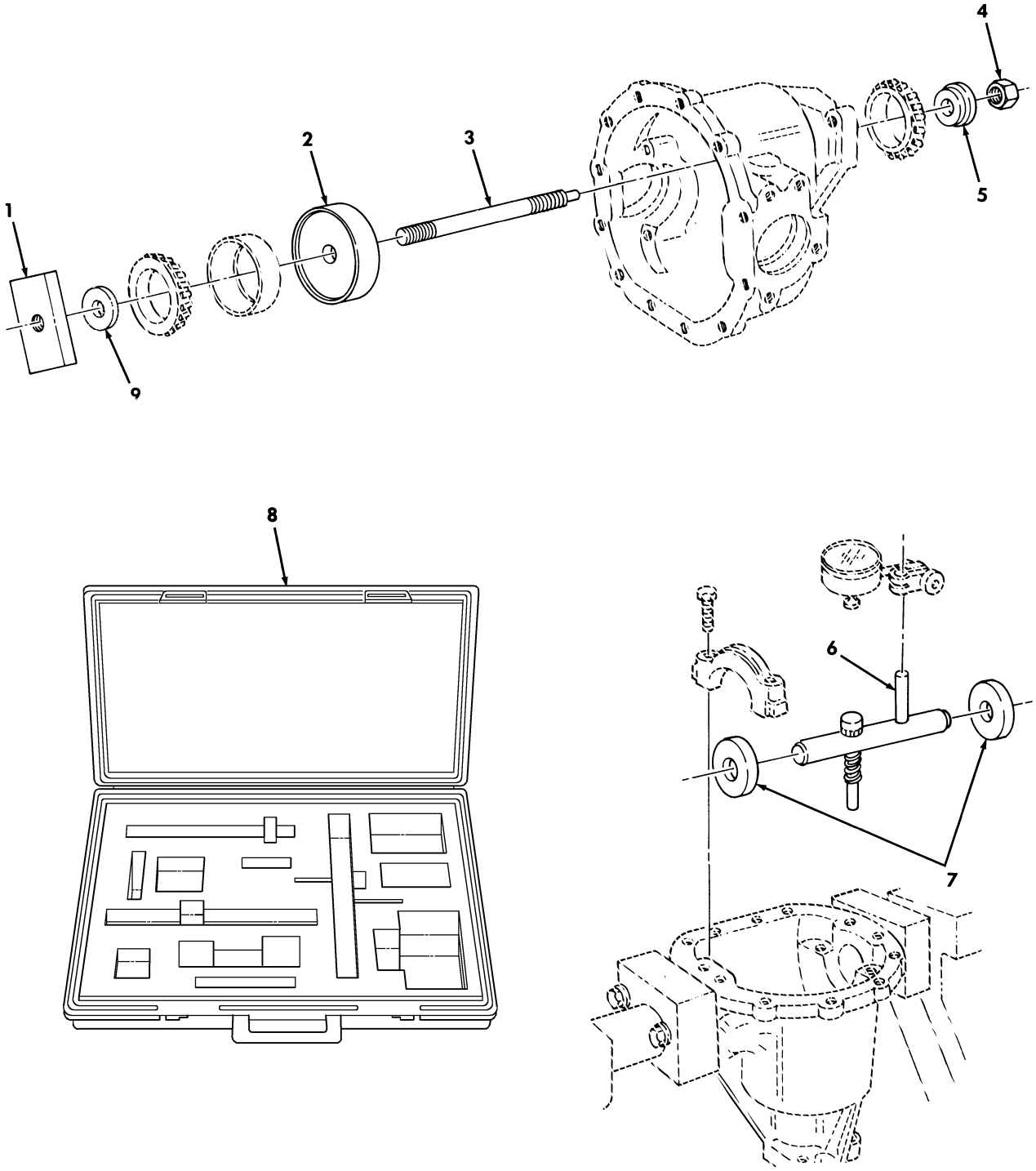

Figure 512. Pinion Setting Kit.

(1) ITEM NO	(2) SMR CODE	(3) NSN	(4) CAGEC	(5) PART NUMBER	(6) DESCRIPTION AND USABLE ON CODES(UOC)	(7) QTY
					GROUP 2604 SPECIAL TOOLS	
					FIG. 512 PINION SETTING KIT	
1	PEHZZ	5120013660893	33287	J-39524-2	BLOCK,RECTANGULAR GAUGE,BOI: SEE PARA. 5.I,PART OF KIT P/N 57K3229...	
2	PEHZZ	5120013662520	33287	J-39524-1	BLOCK,AXLE PINION BOI: SEE PARA. 5.I. PART OF KIT P/N J-39524.....	
3	PEHZZ	5120013669468	33287	J-21777-43	STUD ASSEMBLY BOI: SEE PARA.5.I. PART OF KIT P/N J-39524.....	
4	PEHZZ	5310014654525	24617	9418753	NUT,PLAIN,HEXAGON 1/2-13,BOI: SEE PARA. 5.I,PART OF KIT P/N 57K3229...	
5	PEHZZ	5120013660895	33287	J-35506-3	PILOT WASHER BOI: SEE PARA.5.I. PART OF KIT P/N J-39524.....	
6	PEHZZ	5120013664713	33287	J-39524-5	AXLE PINION ARBOR BOI:SEE PARA.5.I. PART OF KIT P/N J-39524.....	
7	PEHZZ	5120013666260	33287	J-35506-2	SIDE BEARING DISC,A BOI SEE PARA.5.I. PART OF KIT P/N J-39524...	
8	PEHZZ	5140013660642	33287	J-39524-4	CASE,TOOL AND ACCES BOI: SEE PARA 5.I, PART OF KIT P/N J-39524.....	
9	PEHZZ	5120013660894	33287	J-34175-4	PILOT WASHER BOI: SEE PARA. 5.I PART OF KIT P/N J-39524.....	
	ADHHH	5180013638079	33287	J-39524	TOOL KIT,VEHICULAR, PART OF KIT P/N 57K0236 PART OF KIT P/N 57K0266.....	
	ADOOO	5180013875455	19207	57K0267	TOOL KIT,VEHICULAR..BOI: SEE PARA 5.I.....	
	ADFFF	5180013897560	19207	57K0268	TOOL KIT,VEHICULAR BOI: SEE PARA 5.I.....	
	PEHZZ	5180013579692	19207	57K0236	TOOL KIT,TRANSMISSS SUPPLEMENTAL KIT,GENERAL SUPPORT.....	
	ADHHH	5180013897561	19207	57K0266	TOOL KIT,VEHICULAR BOI: SEE PARA 5.I.....	

END OF FIGURE

CROSS-REFERENCE INDEXES

NATIONAL STOCK NUMBER INDEX

STOCK NUMBER	FIG.	ITEM	STOCK NUMBER	FIG.	ITEM
6220-00-001-1514	64	8	4730-00-012-7951	151	18
5330-00-001-1984	116	16	5310-00-013-1245	411	10
2840-00-001-4903	111	5	5310-00-013-1482	215	10
5330-00-001-4904	111	4	5315-00-013-7228	156	14
5310-00-003-4094	408	17	4730-00-014-2432	10	13
	410	35	5310-00-014-5850	63	6
	412	26		93	25
5310-00-003-6779	260	13		95	39
3110-00-005-0873	109	6		96	29
	111	8		169	20
5310-00-006-8291	225	44		199	33
4720-00-006-9541	BULK	10		199	57
5310-00-007-1607	283	12		202	42
5325-00-007-3052	109	1		203	31
	110	1		205	39
	111	11		206	15
	112	10		213	15
4240-00-007-9453	311	10		214	11
	312	6		222	11
5977-00-008-3338	KITS	1		227	49
	KITS	10		241	8
2520-00-008-9987	109	2		243	2
2920-00-009-5213	KITS			244	18
5310-00-010-3028	437	6		246	8
4730-00-011-4627	312	16		246	13
	348	16		247	12
5310-00-011-5093	138	17		248	4
	139	13		249	41
	145	17		268	25
	146	13		272	15
	164	3		293	12
5310-00-011-6121	70	7		299	2
	472	12		303	10
	475	20		331	22
	476	18		333	15
	481	3		337	17
5315-00-012-0123	144	13		339	27
	152	13		347	4
	170	1		368	26
	183	4		374	14
	185	15		411	7
	187	19		429	4
	188	13		430	8
	195	12		430	40
5306-00-012-0231	403	10		480	9
5315-00-012-4553	36	5	5305-00-018-7838	88	44
	38	5		254	7
	39	8		254	10
	407	26		487	8
4730-00-012-7951	143	18	5305-00-018-8370	345	37

CROSS-REFERENCE INDEXES

NATIONAL STOCK NUMBER INDEX

STOCK NUMBER	FIG.	ITEM
5305-00-018-8370	348	27
6240-00-019-0877	63	4
6240-00-019-3093	60	6
	61	6
5940-00-020-0072	79	12
4730-00-024-3971	13	10
	14	17
	19	21
	366	21
	368	38
5306-00-024-6580	104	8
2910-00-025-3493	335	9
	336	6
	388	7
5925-00-026-4767	385	12
5315-00-038-3059	121	6
2540-00-039-8258	56	13
2540-00-040-2129	271	14
4730-00-041-2526	30	19
5306-00-042-5570	84	5
	88	46
5305-00-043-2682	279	23
4730-00-043-3750	345	34
	348	34
5310-00-044-3340	40	7
5310-00-044-3342	166	5
	180	17
4730-00-044-4577	15	7
6240-00-044-6914	60	7
	61	7
	62	3
	64	11
5310-00-045-3296	39	33
	54	12
	55	21
	59	17
	240	19
	260	10
	283	25
	327	37
	335	13
	336	10
	337	18
	338	11
	407	23
	410	13
	410	17
	412	10
	416	15
	426	22
5310-00-045-3296	427	17
	428	15
	438	21
	460	3
	485	16
5310-00-045-3299	39	77
	46	13
	48	2
	52	22
	64	18
	380	2
	406	34
5310-00-045-4007	39	30
	56	22
	213	18
	214	14
	333	29
5310-00-045-5207	69	32
5310-00-045-5218	70	6
	481	4
5305-00-045-7603	224	8
	268	26
4730-00-045-9769	142	30
	150	30
	151	39
2640-00-050-1229	167	22
5306-00-050-1238	433	9
5340-00-050-2740	59	9
	83	21
	84	12
	88	18
	91	11
	94	9
	96	27
	282	5
	338	16
	339	12
	410	22
	412	16
	414	20
	416	23
	424	3
	428	22
4730-00-050-4203	136	9
	136	18
	136	22
	137	8
	137	12
	144	9
	144	19

CROSS-REFERENCE INDEXES

NATIONAL STOCK NUMBER INDEX

STOCK NUMBER	FIG.	ITEM
4730-00-050-4203	152	9
	152	19
	170	4
	170	8
4730-00-050-4205	170	5
	170	12
	170	18
	195	7
4730-00-050-4207	191	23
5940-00-050-7106	79	11
5340-00-050-9077	123	3
	141	24
	149	8
	414	12
5305-00-050-9233	280	16
5305-00-051-4076	324	7
	378	30
5306-00-051-4077	266	4
	321	29
	321	34
	325	29
	413	11
	415	5
5305-00-051-8605	5	12
	141	11
	149	9
	159	11
	161	4
	162	4
5305-00-052-2232	199	18
	199	18
	199	18
	199	18
	199	18
	251	19
	270	11
	296	1
5305-00-052-6456	34	16
5305-00-052-6921	28	2
5340-00-053-8994	75	39
	408	12
	472	4
	474	2
	480	24
5305-00-054-5642	238	21
5305-00-054-5650	282	14
5305-00-054-6670	482	19
5305-00-054-6672	64	17
	252	7
3110-00-055-2100	128	45
3110-00-056-9376	128	7
5340-00-057-2904	75	25
	77	6
	79	22
	83	22
	85	29
	88	23
	92	15
	93	19
	95	26
	96	24
	282	3
	338	8
	339	2
	366	7
	410	24
	412	18
	414	14
5340-00-057-2906	92	12
	95	35
	410	19
	414	17
	416	18
	428	17
	453	4
5340-00-057-3043	160	15
	162	11
	424	2
	426	26
5340-00-057-3052	69	41
	282	6
5970-00-057-9987	44	25
5305-00-058-1082	12	34
	274	28
5305-00-059-3659	227	14
	321	6
	339	4
	373	3
	376	5
	407	22
	410	14
	412	9
	416	12
	426	21
	427	18
	428	12
5305-00-059-3660	65	19
	92	14
	95	43
	218	5

CROSS-REFERENCE INDEXES

NATIONAL STOCK NUMBER INDEX

STOCK NUMBER	FIG.	ITEM
5305-00-059-3660	236	1
	253	7
	253	10
	253	18
	253	30
	255	9
	255	17
	255	23
	259	5
	260	2
	262	13
	325	22
	426	17
	427	22
5305-00-059-3661	255	9
	255	17
	255	23
	255	28
	410	25
	412	19
6240-00-060-4707	65	10
	65	25
5310-00-061-0004	345	25
	348	36
5310-00-061-4650	5	7
	14	25
	15	3
	16	3
	17	7
	18	4
	18	10
	21	1
	25	7
	27	13
	29	3
	42	8
	46	21
	50	8
	71	10
	84	22
	97	4
	99	11
	124	13
	125	13
	141	17
	153	17
	169	27
	169	33
	177	13
	178	21
5310-00-061-4650	202	26
	203	9
	203	23
	204	14
	206	24
	210	4
	211	26
	212	27
	241	5
	243	8
	244	7
	245	16
	245	32
	246	18
	247	5
	247	18
	248	7
	249	27
	250	19
	251	1
	252	22
	253	21
	254	22
	255	20
	267	3
	267	13
	269	13
	270	1
	270	26
	271	9
	272	2
	274	18
	275	20
	276	20
	285	13
	286	17
	288	22
	288	30
	289	5
	293	31
	316	21
	323	13
	331	9
	332	42
	333	39
	334	5
	338	22
	339	17
	343	17
	366	30

CROSS-REFERENCE INDEXES

NATIONAL STOCK NUMBER INDEX

STOCK NUMBER	FIG.	ITEM
5310-00-061-4650	368	32
	375	28
	376	13
	384	9
	398	27
	399	15
	400	13
	402	12
	408	27
	409	9
	413	5
	415	15
	417	18
	418	9
	419	4
	420	6
	421	6
	422	8
	423	9
	429	22
	430	17
	430	38
	468	4
	475	9
	477	5
	478	3
	484	15
	485	14
	486	9
	492	7
	487E	10
5310-00-061-4651	186	11
	187	6
	194	12
	457	20
	470	12
5310-00-061-7326	365	22
5310-00-063-7360	345	42
	348	39
5340-00-067-3868	135	2
	141	22
5305-00-068-0501	18	13
	118	12
	286	20
	307	9
5305-00-068-0502	19	16
	21	4
	50	11
	53	3
	58	9
5305-00-068-0502	68	1
	70	9
	84	24
	93	16
	124	10
	125	10
	141	14
	155	2
	180	19
	203	11
	206	4
	208	14
	241	3
	244	16
	245	20
	250	16
	251	21
	252	1
	253	1
	254	1
	255	1
	267	9
	269	11
	270	5
	294	4
	313	9
	331	25
	333	9
	342	4
	343	14
	377	1
	384	13
	398	16
	399	13
	400	14
	410	30
	412	11
	416	3
	421	11
	422	11
	484	5
	492	9
	494	5
	495	11
	496	9
	497	5
	498	17
5305-00-068-0508	17	10
	27	10
	29	6

CROSS-REFERENCE INDEXES

NATIONAL STOCK NUMBER INDEX

STOCK NUMBER	FIG.	ITEM
5305-00-068-0508	46	23
	88	50
	208	2
	233	6
	233	6
	241	12
	243	13
	252	3
	252	3
	269	33
	270	28
	275	5
	287	12
	327	47
	331	35
	332	5
	365	4
	368	40
	399	21
	407	41
	468	5
	478	4
	481	6
	485	10
	498	8
5305-00-068-0509	49	7
	249	38
	251	28
	252	11
	270	8
	285	3
	288	24
	288	32
	321	11
	398	10
	425	3
	426	10
	427	4
	487	9
5305-00-068-0510	2	6
	15	30
	16	19
	23	18
	24	26
	35	2
	37	2
	142	15
	150	15
	174	13
	175	6
5305-00-068-0510	245	21
	274	27
	275	1
	276	24
	277	47
	286	30
	408	5
	463	6
	463	6
	464	3
	476	1
5305-00-068-0511	24	8
	138	16
	139	14
	145	16
	146	14
	189	9
	190	7
	266	18
	272	33
	272	33
	283	6
	431	2
	462	2
5306-00-068-0513	379	24
	379	29
	388	15
5306-00-068-0514	379	13
5305-00-068-0515	64	22
	379	52
	387	17
	393	9
5310-00-068-5285	165	5
	166	4
	179	9
	180	10
5305-00-068-7837	28	8
	46	25
	155	11
	177	10
	178	2
	197	30
	199	42
	210	3
	274	8
	276	1
5305-00-069-5578	398	3
5315-00-069-8996	406	11
5305-00-071-1313	373	4
	376	4

CROSS-REFERENCE INDEXES

NATIONAL STOCK NUMBER INDEX

STOCK NUMBER	FIG.	ITEM
5305-00-071-1315	316	16
	320	15
	320	27
	375	23
	378	23
5305-00-071-1318	214	4
	246	24
	251	7
	252	26
	267	18
	296	15
5305-00-071-1322	246	31
	410	29
5305-00-071-1327	316	10
	320	8
	320	20
	375	16
	378	16
5305-00-071-1783	188	22
5305-00-071-1786	136	5
	151	42
5305-00-071-1788	425	5
	426	8
	427	6
5305-00-071-2055	35	17
	152	16
5305-00-071-2056	389	3
	393	3
5305-00-071-2057	37	21
	42	5
	462	13
5305-00-071-2059	37	9
	42	5
	408	14
5305-00-071-2066	140	5
	140	11
	147	9
	182	13
	183	19
	296	4
5305-00-071-2067	140	11
	142	16
	147	5
	150	16
	151	16
	179	17
	180	27
	182	20
	184	7
	237	9
5305-00-071-2067	429	34
	456	6
5305-00-071-2069	142	34
	174	8
	183	9
	187	14
	209	15
	283	5
	315	8
	363	27
	408	16
	417	16
	456	23
5305-00-071-2070	127	4
	181	8
	186	13
	242	6
	245	24
	429	38
	456	24
5305-00-071-2071	26	12
	185	10
	252	13
	285	6
	295	8
	455	2
	456	5
5305-00-071-2072	283	4
5305-00-071-2073	188	24
	191	5
5305-00-071-2074	33	1
	182	18
	183	18
5305-00-071-2075	182	14
	188	6
5305-00-071-2076	147	9
	182	8
	182	16
	188	9
5305-00-071-2078	181	7
	184	4
	188	1
5305-00-071-2079	181	3
	182	8
5305-00-071-2081	2	11
	179	13
	180	18
	184	17
5305-00-071-2082	179	6
	180	7

CROSS-REFERENCE INDEXES

NATIONAL STOCK NUMBER INDEX

STOCK NUMBER	FIG.	ITEM	STOCK NUMBER	FIG.	ITEM
5305-00-071-2083	363	16	5305-00-071-2513	249	36
5305-00-071-2236	266	23	5305-00-071-2514	251	10
	401	14		251	10
5305-00-071-2237	338	21	4730-00-071-7890	327	25
	339	16	2910-00-073-0165	334	1
	393	1	5975-00-074-2072	12	9
	413	8		98	8
	486	5		485	8
5305-00-071-2505	80	13	5310-00-074-2351	292	1
	99	6	5325-00-074-3301	BULK	6
	202	16	2540-00-078-6633	191	7
	209	6		191	15
	245	37	5340-00-079-7837	21	16
	247	15		398	11
	280	54		400	9
	281	54		425	18
	311	4	5310-00-080-2411	432	5
	325	13		487	13
	326	13	5310-00-080-6004	2	3
5305-00-071-2506	25	1		16	24
	28	8		23	2
	55	12		24	7
	103	4		66	6
	156	16		79	20
	365	13		128	54
	365	26		129	23
	368	24		134	2
	375	30		142	14
	496	13		150	14
5305-00-071-2509	246	35		151	14
	246	35		163	6
	248	27		164	2
	249	20		174	15
	252	10		175	9
	253	13		187	9
	253	20		189	1
	255	19		190	4
	289	9		245	22
	389	11		266	25
5305-00-071-2510	153	11		272	25
	211	11		273	2
	212	7		273	2
	225	41		277	2
	246	29		280	25
	246	38		281	25
	249	9		328	18
	484	10		329	13
5305-00-071-2512	248	20		332	34
	293	26		392	9
5305-00-071-2513	248	25		408	4

CROSS-REFERENCE INDEXES

NATIONAL STOCK NUMBER INDEX

STOCK NUMBER	FIG.	ITEM
5310-00-080-6004	431	3
	438	7
	461	9
5310-00-080-9786	88	27
	215	9
	222	10
	339	8
	346	6
	347	3
	426	18
	427	21
	467	1
5310-00-081-4219	5	4
	41	22
	74	2
	142	28
	143	37
	150	28
	151	37
	154	7
	160	14
	162	13
	178	12
	180	11
	189	4
	190	2
	198	20
	199	2
	204	7
	209	3
	211	14
	212	12
	225	30
	226	15
	230	4
	235	7
	236	7
	243	24
	244	10
	273	8
	273	17
	277	33
	280	46
	281	46
	288	19
	321	19
	321	31
	324	8
	325	27
	333	23
5310-00-081-4219	363	15
	376	15
	377	14
	378	29
	402	7
	429	6
	432	4
	433	8
	436	9
	473	2
	474	6
	480	5
2940-00-082-6034	6	7
5320-00-083-5009	52	9
	197	1
	208	6
	211	4
	270	17
	296	12
	311	5
	311	17
	317	8
	321	9
	325	18
	332	15
	354	13
	355	3
	373	7
	376	8
	376	12
5310-00-087-7493	11	5
	37	4
	52	25
	103	16
	153	16
	159	3
	160	10
	205	2
	205	36
	206	1
	206	9
	206	21
	206	29
	238	22
	240	7
	268	18
	270	14
	285	5
	286	10
	288	7

CROSS-REFERENCE INDEXES

NATIONAL STOCK NUMBER INDEX

STOCK NUMBER	FIG.	ITEM	STOCK NUMBER	FIG.	ITEM
5310-00-087-7493	292	17	5940-00-107-1481	75	5
	293	5		76	6
	398	23		92	10
	401	8		96	6
	429	17	5330-00-107-3925	104	11
	436	8	3110-00-108-9247	458	35
	490	2	5975-00-111-3208	492	6
5310-00-088-0553	392	4	4720-00-111-5096	BULK	8
5310-00-088-1251	50	13	5310-00-112-2233	39	12
	169	12	5940-00-113-0954	93	13
5340-00-088-1254	75	33	5940-00-113-3143	90	5
	84	17		93	12
	88	15		95	5
	155	1		96	12
5340-00-088-1255	485	7	5940-00-113-3145	95	17
5325-00-088-6147	62	23		96	9
5340-00-088-6655	88	40	5940-00-113-9420	485	3
	93	27	5940-00-113-9819	95	10
	410	27		96	7
5305-00-088-8332	374	2	5940-00-113-9821	367	7
	429	10	5940-00-113-9825	75	4
	430	6		95	20
	430	20		96	15
	430	33	5940-00-113-9826	86	34
5330-00-089-0978	345	20	5940-00-114-1300	95	9
5331-00-089-0998	345	21		96	10
5365-00-090-5426	83	36	5940-00-114-1314	41	6
	85	18		95	16
	86	11		96	16
5340-00-091-3790	55	16	5940-00-114-1315	76	12
	75	46	5940-00-114-1317	91	7
	79	17	2920-00-114-2942	406	3
	83	16	2920-00-114-2945	406	26
	85	26	2920-00-114-3370	406	28
	88	6	5935-00-115-2306	65	17
	93	26		81	13
	96	25	5935-00-115-2307	65	13
	366	5		81	9
	424	4		483	5
	426	25	5940-00-115-2674	41	2
	427	25		95	12
	488	14		96	13
4730-00-100-3918	379	44	5940-00-115-2676	91	5
3110-00-100-5920	142	22		94	5
	150	22	5940-00-115-2678	41	7
	151	29		474	16
3110-00-100-5937	142	3	5940-00-115-2683	480	32
3110-00-100-6162	314	38	5940-00-115-2684	480	35
2540-00-104-2889	389	2	5940-00-115-2685	69	39
4910-00-105-2823	502	6	5940-00-115-4992	91	2

CROSS-REFERENCE INDEXES

NATIONAL STOCK NUMBER INDEX

STOCK NUMBER	FIG.	ITEM	STOCK NUMBER	FIG.	ITEM
5940-00-115-4992	94	6	5310-00-124-9265	414	13
5940-00-115-5001	480	21		416	17
5940-00-115-5006	44	16		462	16
	69	14		468	12
	69	20		477	6
	69	25		485	13
	72	4		488	9
	72	19		488	11
	474	16	5310-00-126-3842	169	7
	480	17	5310-00-126-5168	228	11
5940-00-115-5012	480	15	5930-00-130-5349	46	17
5940-00-115-5023	480	13	4030-00-132-9181	275	9
5305-00-115-9406	349	8		276	7
5305-00-115-9526	72	1	5975-00-133-8687	51	14
	251	4		386	3
	251	4	5930-00-134-5036	46	11
5305-00-115-9934	205	14	5305-00-135-3032	348	7
5320-00-117-6853	197	15	5331-00-137-3450	45	9
	197	15	5330-00-138-0251	45	41
	197	36	7690-00-138-5788	362	1
	199	52	4720-00-139-3968	BULK	9
	289	13	5315-00-140-1938	293	16
5320-00-117-6856	197	15	5310-00-141-3062	256	8
	197	15		257	8
5320-00-117-6910	288	17		259	11
5320-00-117-7287	224	16		262	7
5320-00-117-7288	289	10	5940-00-143-4774	367	15
5320-00-117-7289	288	4	5940-00-143-4775	367	14
5320-00-117-7291	213	4	5940-00-143-4794	72	10
5320-00-119-6823	498	3		72	20
5310-00-124-9265	19	14		73	6
	77	7	5365-00-143-9854	406	8
	79	23	5340-00-150-1658	83	23
	84	8		488	10
	85	23	5315-00-150-2793	276	3
	88	9	5305-00-150-3408	56	21
	95	32	4730-00-150-6118	11	9
	207	6	5340-00-151-9651	12	18
	227	16		41	23
	231	22	6145-00-152-6499	81	17
	254	24	3110-00-155-6152	128	14
	260	22		148	13
	282	4	6240-00-155-7790	65	16
	318	7	5975-00-156-3253	488	5
	321	21	2920-00-160-9346	406	12
	323	16	3110-00-162-3766	286	12
	325	20	5310-00-164-1790	377	7
	327	43	5305-00-164-7082	65	8
	400	10		65	15
	410	26	5365-00-165-7862	406	22

CROSS-REFERENCE INDEXES

NATIONAL STOCK NUMBER INDEX

STOCK NUMBER	FIG.	ITEM	STOCK NUMBER	FIG.	ITEM
5310-00-166-8567	172	17	5325-00-174-9332	80	12
4730-00-166-9178	30	13		315	13
5310-00-167-0680	476	12	5325-00-174-9829	137	5
5310-00-167-0721	178	13	5310-00-177-7529	256	4
	436	10		257	1
5310-00-167-0821	101	2		260	4
	382	9	2540-00-177-8108	393	14
	390	8	6220-00-179-4325	60	9
5310-00-167-0822	194	6	5305-00-179-8946	89	13
5310-00-167-0823	199	21		91	10
	199	21		93	21
	199	21		94	8
	199	21		95	36
	245	25	5306-00-180-2748	321	32
	252	14	5305-00-180-4966	39	6
	429	35		259	12
5310-00-167-0826	404	7		263	7
5310-00-167-0834	279	27		289	4
5310-00-167-0835	279	3		292	3
5310-00-167-0836	279	18		365	20
5310-00-167-0837	279	11	5306-00-182-2025	199	45
5310-00-167-0893	307	3	5306-00-182-2027	198	25
	308	14		199	44
	401	15		317	12
5935-00-167-7775	65	5		373	11
	65	26		376	19
	75	10	5935-00-184-6707	75	9
	76	4		76	8
	80	5		81	5
	81	3		85	20
	81	15		86	13
	83	3	5120-00-184-8398	505	1
	84	31	5310-00-184-8971	69	29
	85	1		434	5
	86	1		435	10
	87	1	5325-00-184-9846	89	16
	87	5		368	10
	89	2	5325-00-185-0004	96	18
	90	2	5331-00-185-0075	467	11
	92	6		496	14
	93	8	5325-00-185-0961	207	11
	95	2	5305-00-191-3640	313	10
	96	5	5340-00-193-4111	370	18
	367	8	5310-00-194-1483	46	15
5310-00-171-1734	39	25		388	14
5331-00-171-6649	163	11	9905-00-198-2728	354	2
4730-00-172-0010	169	16	5310-00-198-6691	437	5
2520-00-172-1947	109	4	2540-00-200-4249	KITS	41
	111	17	5342-00-200-7564	307	4
5325-00-174-9038	70	1		308	16

CROSS-REFERENCE INDEXES

NATIONAL STOCK NUMBER INDEX

STOCK NUMBER	FIG.	ITEM
9905-00-202-3639	330	2
5325-00-202-4005	80	17
4730-00-204-3491	29	1
	177	6
5305-00-204-4850	327	17
5940-00-204-8990	367	13
9905-00-205-2795	211	17
	212	10
5305-00-206-2508	69	30
5306-00-207-2221	64	4
	83	34
5930-00-207-9422	51	3
5310-00-208-1918	88	4
	202	41
	203	29
	205	38
	206	16
	243	28
	244	17
	248	5
	249	18
	249	42
	272	4
	279	28
	286	26
5306-00-208-3639	279	12
5310-00-208-9255	480	10
	482	11
5310-00-209-0786	55	13
5310-00-209-0965	35	16
	36	10
	37	10
	38	10
	42	4
	150	35
	151	41
	171	3
	404	14
	405	4
	408	13
	472	21
	475	17
5310-00-209-1962	80	16
5935-00-214-0904	40	26
	86	24
	366	34
	386	1
	472	8
	475	1
	479	6
5935-00-214-0904	483	7
2540-00-216-5722	348	18
4520-00-217-5782	345	30
	348	29
4730-00-221-2140	363	12
5970-00-221-5301	44	20
	69	12
	69	21
	69	26
	72	5
	72	17
	313	17
5305-00-225-3842	5	16
	202	10
	203	5
	204	5
	308	9
	430	16
5305-00-225-3843	21	17
	42	6
	95	42
	153	5
	169	10
	169	30
	203	1
	203	26
	204	1
	227	28
	247	1
	249	2
	250	5
	252	12
	254	13
	266	21
	267	5
	277	23
	285	14
	286	37
	292	11
	312	1
	334	6
	339	28
	343	18
	352	3
	366	17
	368	34
	408	22
	417	3
	430	42
	459	3

CROSS-REFERENCE INDEXES

NATIONAL STOCK NUMBER INDEX

STOCK NUMBER	FIG.	ITEM
5305-00-225-3843	475	6
	484	14
	486	12
	492	15
	494	11
5310-00-225-5328	482	17
5310-00-225-6993	188	32
5305-00-225-7211	5	3
5306-00-225-8496	180	13
5306-00-225-8498	213	9
	250	20
	418	4
	419	5
	420	3
	421	1
	422	1
	423	1
5306-00-225-8499	74	1
	153	27
	154	10
	205	31
	206	2
	206	18
	268	4
	329	11
	333	24
	339	20
	402	5
	409	1
	410	8
	411	1
	413	1
	414	7
	416	7
	418	6
	419	7
	420	1
	421	8
	422	3
	423	8
	428	7
5306-00-225-8503	329	8
5306-00-225-8511	12	13
5306-00-225-9089	280	45
	281	45
5306-00-225-9097	392	3
5306-00-226-4823	143	36
	151	36
5306-00-226-4824	273	19
	407	14
5306-00-226-4824	488	24
5306-00-226-4825	19	20
	100	17
	116	18
	230	26
	234	6
	234	6
	480	3
	487	16
5306-00-226-4826	230	19
	231	12
	273	7
	277	7
	328	8
5306-00-226-4827	41	21
	83	30
	204	6
	225	29
	226	14
	242	10
	287	20
	329	18
	473	1
	474	7
5306-00-226-4828	160	13
	162	14
	225	2
	226	13
	284	1
	288	26
	292	13
	340	1
	346	1
	363	23
	374	22
	417	4
	418	7
	419	8
	420	5
	421	7
	422	9
	423	3
5306-00-226-4829	144	12
	152	12
	211	31
	212	29
	225	26
	226	8
	328	2
	390	6

CROSS-REFERENCE INDEXES

NATIONAL STOCK NUMBER INDEX

STOCK NUMBER	FIG.	ITEM	STOCK NUMBER	FIG.	ITEM
5306-00-226-4829	417	7	4720-00-241-4435	BULK	24
	423	7	5310-00-241-6658	154	5
	432	2		198	19
	461	8		199	1
5305-00-226-4831	121	9		273	16
	242	2		277	35
	269	20		280	47
	279	35		281	47
	288	23		317	11
5306-00-226-4832	121	8		321	30
5306-00-226-4833	211	15		373	8
	212	11		376	18
	242	4		378	28
	377	15		389	14
5306-00-226-4834	211	16		402	8
	212	13		415	4
5306-00-226-4835	209	16		433	7
	338	24	5310-00-241-6659	170	14
	429	5	5310-00-241-6921	62	20
5306-00-226-4838	189	3	4020-00-246-0688	BULK	3
5930-00-226-6429	46	6	4810-00-248-1635	348	40
5305-00-226-7237	12	37	5325-00-249-6345	333	33
5305-00-227-1543	333	31	5310-00-251-4503	234	17
2920-00-228-3402	406	7		254	4
4730-00-230-2959	496	25		254	12
5315-00-234-1861	268	9		260	16
4030-00-237-8741	314	18		416	11
5315-00-239-8032	186	8		486	3
	188	19	5905-00-251-7145	348	4
	188	35	5305-00-253-5626	191	16
5305-00-240-0194	67	2	5305-00-253-5627	357	8
	88	10	4730-00-254-6211	334	9
	169	22	4730-00-254-6227	334	7
	197	33	5315-00-255-5580	268	6
	199	59	3120-00-255-5697	111	13
	205	4		112	12
	206	7	5905-00-258-6788	59	12
	225	50	4730-00-260-8285	366	15
	226	30	5310-00-261-7340	341	8
	248	28	5310-00-261-8278	69	31
	286	15	5325-00-263-6648	496	3
	327	28	5325-00-263-6651	79	25
	411	5	4730-00-266-0535	334	19
	460	2	4730-00-266-0536	366	12
5315-00-240-0251	243	32		366	14
5305-00-240-6541	227	50	4730-00-266-0538	366	14
5305-00-240-6668	85	3	4730-00-267-8945	401	2
	88	1	5305-00-267-8952	387	7
	327	50	5305-00-267-8953	279	2
5120-00-240-8702	505	4		388	12

CROSS-REFERENCE INDEXES

NATIONAL STOCK NUMBER INDEX

STOCK NUMBER	FIG.	ITEM	STOCK NUMBER	FIG.	ITEM
5305-00-267-8953	485	15	5315-00-285-7161	365	8
5305-00-267-8954	228	15		368	12
6680-00-269-0335	488	23	5325-00-285-8363	424	6
5305-00-269-2811	392	8	5340-00-286-2494	327	48
5305-00-269-3216	410	4	4730-00-287-1706	159	6
5305-00-269-3217	23	1		160	20
	24	13		161	14
5305-00-269-3233	363	10		162	22
5305-00-269-3242	390	15	4820-00-287-5627	335	17
5310-00-269-3466	225	13		336	14
4730-00-270-4606	335	16	5325-00-290-1960	70	13
	336	13	5325-00-291-9366	92	13
5510-00-270-6031	BULK	89		333	34
5325-00-270-8891	380	5		380	7
5310-00-274-8710	343	5	5306-00-292-8253	277	37
	497	2	5330-00-297-6329	47	14
	498	11	5331-00-297-9990	72	24
5310-00-274-8715	249	3	5315-00-298-1481	437	11
	315	11	6220-00-299-7425	63	3
5310-00-274-9364	238	3		63	9
5320-00-275-8344	337	7	6220-00-299-7426	63	3
5325-00-276-6051	96	21		63	9
5325-00-276-6090	496	21	2920-00-302-6342	KITS	76
5325-00-276-6091	369	4	5930-00-307-8856	46	19
5325-00-276-6228	489	6	5325-00-331-4774	407	11
5325-00-276-6343	70	14	5310-00-333-7341	345	24
	473	9	5935-00-333-9414	80	10
	481	10		84	28
4730-00-277-6347	366	24		85	10
5365-00-277-7341	142	5		86	6
	151	5	2805-00-336-1716	4	15
4730-00-278-2523	331	30	5935-00-338-2822	282	13
	385	4	2530-00-340-1405	157	9
4730-00-278-3828	17	5		158	5
5325-00-281-1557	333	10	3110-00-343-4474	406	10
	367	10	3110-00-343-4477	406	24
5325-00-281-8642	316	3	5930-00-345-5455	345	10
5325-00-281-8643	224	13		348	14
	316	5	5325-00-349-8518	121	15
	319	2	5310-00-350-2655	62	6
	322	2	2520-00-352-2168	169	29
	324	2	5330-00-353-0959	63	10
5325-00-282-1830	205	29	5305-00-353-0969	62	18
5340-00-282-7509	84	15	5310-00-355-5645	44	7
5340-00-282-7517	327	27	4730-00-359-9487	12	4
5340-00-282-7537	246	22		398	31
	366	28	4730-00-366-3011	178	18
	386	10	5305-00-366-3337	34	1
5940-00-283-5280	367	11	5325-00-371-8108	224	12
5310-00-285-7037	269	28		316	2

CROSS-REFERENCE INDEXES

NATIONAL STOCK NUMBER INDEX

STOCK NUMBER	FIG.	ITEM	STOCK NUMBER	FIG.	ITEM
5325-00-371-8108	316	6	5310-00-407-9566	487	15
	319	3		BULK	96
	322	3	5340-00-408-2432	191	22
	324	3	5310-00-409-3333	144	3
5315-00-376-9034	433	10		152	3
3030-00-379-2815	32	2		181	16
5340-00-385-8820	17	9		182	2
	27	11		183	13
5305-00-390-0524	83	29		184	19
	272	8		195	13
5310-00-393-6685	83	37		270	35
	85	19		456	20
	86	12		471	3
5940-00-399-6676	75	12	5315-00-417-5223	238	13
5310-00-401-5321	237	13	5310-00-419-0876	36	7
	262	4		38	7
5310-00-402-2778	51	12		39	10
3110-00-403-1488	172	20		476	9
5305-00-403-5130	345	14	6240-00-419-3185	49	2
	348	5	3120-00-425-6467	45	4
	348	13	5306-00-425-8569	69	40
3110-00-406-9608	148	18	5310-00-429-3135	39	43
5310-00-407-9566	19	19	5310-00-429-3156	39	44
	41	24	5310-00-429-3453	39	42
	59	4	5305-00-432-4165	49	12
	136	15	5305-00-432-4170	403	12
	137	2		433	4
	180	12	5305-00-432-4201	485	5
	205	32	5305-00-432-4205	208	9
	206	19		280	34
	211	30		281	34
	212	30		331	29
	225	31	5305-00-432-4253	395	1
	226	16	5305-00-434-4811	406	1
	231	13	3110-00-436-3248	128	50
	268	5	5340-00-438-1833	313	4
	269	15	5340-00-438-1836	477	9
	287	19	4730-00-439-6021	335	1
	328	7	5325-00-442-5845	155	7
	329	7		280	42
	340	10		281	42
	363	14		289	19
	373	9	5305-00-442-7347	40	49
	407	15	6220-00-443-0589	62	21
	430	13	5930-00-445-9274	55	6
	432	3		56	18
	454	3	5310-00-447-8774	103	2
	461	6		127	1
	473	5	5310-00-449-2376	167	26
	474	8		191	14

CROSS-REFERENCE INDEXES

NATIONAL STOCK NUMBER INDEX

STOCK NUMBER	FIG.	ITEM
5310-00-449-2381	35	7
5325-00-449-3001	208	5
3120-00-450-1905	45	18
5331-00-451-0118	128	51
3110-00-451-1534	406	20
5975-00-451-5001	5	8
	435	8
2590-00-454-3620	93	23
	95	37
	96	30
	303	9
	304	5
	338	2
	339	6
	410	32
	412	13
5305-00-456-2582	345	8
	348	6
	348	15
5310-00-458-2382	462	4
5310-00-460-4490	218	6
	257	5
5331-00-462-0907	61	11
5935-00-462-6603	65	4
	65	27
	75	11
	76	14
	80	2
	81	7
	83	20
	83	20
	84	32
	85	15
	86	8
	87	2
	87	4
	89	5
	90	6
	92	4
	93	9
5331-00-463-0200	60	10
5310-00-463-0268	62	25
5305-00-470-3321	283	22
4730-00-471-3102	366	13
5310-00-471-9243	131	2
2920-00-472-1723	KITS	39
5310-00-472-2963	421	9
	422	4
4730-00-476-5859	302	6
	303	15
4730-00-476-5859	305	8
	306	6
	309	4
	310	6
4710-00-476-5871	BULK	55
4730-00-476-7127	302	3
	303	4
	304	11
	305	5
	306	3
	309	10
5310-00-477-6768	482	8
5305-00-478-0273	73	2
5310-00-482-1999	406	30
5305-00-482-6825	254	29
	281	7
5310-00-482-9493	33	6
5310-00-483-8791	321	18
	376	14
	382	6
3120-00-485-1017	165	3
	166	8
8145-00-485-8250	126	3
5310-00-488-3889	2	8
	140	1
	147	1
	179	3
	180	4
	181	9
	182	4
	183	14
	184	1
	184	1
	185	7
	186	7
	187	11
	188	5
	188	38
	191	1
	199	22
	199	22
	199	22
	199	22
	242	8
	245	26
	251	47
	270	22
	283	14
	315	5
	429	36

CROSS-REFERENCE INDEXES

NATIONAL STOCK NUMBER INDEX

STOCK NUMBER	FIG.	ITEM	STOCK NUMBER	FIG.	ITEM
5310-00-488-3889	453	1	5305-00-543-2419	463	1
	455	6	5305-00-543-2866	272	34
	456	17		273	5
	463	9		274	26
	471	1		275	21
5305-00-489-0743	77	18		276	23
	88	14	5325-00-543-2902	345	38
	88	28		348	37
	457	16	5305-00-543-4372	60	1
5340-00-489-5684	246	1		61	1
	246	7		240	6
	247	11		332	35
	247	22	5305-00-543-4709	337	2
	248	3	5310-00-543-5101	88	49
	249	7	5305-00-543-5828	52	14
	249	15	5940-00-549-6581	69	15
	249	22	5940-00-549-6583	69	18
	249	31	5310-00-550-1130	68	7
	268	40		269	32
	269	8		327	16
	270	39		366	4
	286	14		484	6
	374	3	5305-00-550-1537	205	24
4720-00-491-0102	BULK	29	5310-00-550-3714	380	12
5340-00-492-2313	208	11	5310-00-550-4725	256	7
2910-00-493-2138	9	3	5975-00-553-6995	380	13
5330-00-493-3876	KITS	55	3110-00-554-3246	407	4
5320-00-493-4101	300	8	2640-00-555-2834	167	11
5330-00-497-4633	128	8	4720-00-555-8015	BULK	30
5310-00-498-6675	395	9	2520-00-557-6619	100	16
5305-00-499-7694	51	9	5310-00-559-0070	379	12
6105-00-512-9225	333	13	5315-00-559-7467	99	13
5325-00-514-1299	143	21	5340-00-565-5378	273	12
5310-00-515-8776	453	14	4240-00-565-6059	307	2
5940-00-520-2447	313	18		308	8
2540-00-525-7067	191	13	5310-00-568-6077	100	12
5320-00-526-2945	213	30	5975-00-570-9598	18	9
4730-00-529-1237	384	3		41	12
6145-00-538-8219	BULK	82		77	28
	BULK	84		379	7
4730-00-541-0793	31	1		381	2
4710-00-541-4935	288	11	5935-00-572-9180	483	6
5310-00-543-2410	384	7	5315-00-576-0265	132	30
5305-00-543-2419	1	6	5305-00-576-2335	345	18
	2	2		348	12
	23	8	5310-00-576-5752	333	17
	251	43		349	4
	329	1	6220-00-577-3434	63	1
	341	1	6210-00-578-7970	311	12
	425	14		312	8

CROSS-REFERENCE INDEXES

NATIONAL STOCK NUMBER INDEX

STOCK NUMBER	FIG.	ITEM	STOCK NUMBER	FIG.	ITEM
5310-00-579-5554	72	12	5305-00-582-9501	488	6
3110-00-580-3843	128	38	5310-00-584-5005	468	9
5331-00-580-6586	177	8	5310-00-584-5272	69	2
	178	4		103	19
	470	3		156	21
5310-00-582-5965	28	7		174	7
	53	4		240	2
	62	26		240	12
	75	35		271	16
	93	18		271	28
	155	12		277	39
	156	17		363	19
	205	23		369	1
	237	11		424	7
	240	24		434	3
	250	9		435	7
	267	6		453	2
	286	36	4730-00-585-2653	169	25
	287	11	4730-00-586-8463	27	8
	308	5	4730-00-595-1078	399	9
	311	3	5310-00-595-6057	408	30
	313	2		488	16
	327	41	5310-00-595-6612	39	9
	342	5	5310-00-595-7237	412	6
	343	15		482	13
	365	5	5310-00-595-7486	183	3
	368	23		185	13
	407	31		187	17
	410	37		188	15
	414	16	5305-00-600-8993	324	38
	416	20	5305-00-601-7729	39	7
	425	8		406	19
	426	5	5935-00-605-9322	85	11
	427	9		86	16
	428	19	5305-00-614-3423	46	12
	430	41	5310-00-614-3505	35	8
	467	5	5935-00-614-3959	80	7
	492	16		85	7
	498	18		86	3
5305-00-582-9501	37	8	5310-00-615-1556	407	24
	75	24	5930-00-615-7897	367	6
	77	5	5930-00-615-9376	52	30
	83	10	5315-00-616-4261	133	12
	84	4	5305-00-616-4831	407	35
	85	22	5315-00-616-5501	476	8
	88	7	5315-00-616-5526	35	9
	216	4	5315-00-616-5529	404	9
	327	45	6685-00-618-1822	363	28
	468	13	5120-00-618-6902	504	14
	488	6	5310-00-619-1148	482	12

CROSS-REFERENCE INDEXES

NATIONAL STOCK NUMBER INDEX

STOCK NUMBER	FIG.	ITEM	STOCK NUMBER	FIG.	ITEM
5310-00-625-5756	407	16	5310-00-637-9541	475	23
5310-00-637-9541	1	4		476	2
	2	5		490	9
	5	13	5305-00-638-0714	43	55
	16	22	5305-00-638-8920	341	9
	23	17	4730-00-639-9730	135	6
	24	25	4030-00-641-3921	275	11
	34	13	5530-00-641-6069	BULK	50
	35	3	5310-00-641-9464	251	5
	36	15	2920-00-653-9025	406	33
	37	3	5930-00-655-1514	367	5
	38	15	5310-00-655-9370	438	17
	43	48	5305-00-655-9711	73	12
	44	3	5310-00-655-9860	80	8
	52	24		85	8
	62	7		86	4
	64	13	5310-00-656-0114	476	13
	68	3	5305-00-660-2832	456	15
	70	10	5120-00-677-2259	500	1
	72	2	5342-00-678-1753	160	18
	75	43	5930-00-679-5925	345	15
	77	2		348	38
	79	19	5310-00-682-0775	257	6
	83	33	5325-00-682-1762	116	19
	88	38	2590-00-683-0598	68	5
	89	7	5120-00-683-8597	505	5
	124	15	4720-00-684-4033	BULK	19
	125	15	5310-00-685-3228	327	13
	164	3	5935-00-686-2599	85	16
	169	2		86	9
	174	14	5305-00-688-2111	103	13
	175	8		144	16
	205	35		152	16
	206	22	3110-00-689-4076	128	2
	286	9	5305-00-689-7472	148	26
	286	35	5340-00-689-9514	84	33
	328	17		85	4
	340	3		88	2
	352	2		91	14
	363	11		92	20
	372	5		95	24
	379	23		488	7
	401	12	5975-00-697-7769	85	12
	404	13		86	17
	405	5	5330-00-700-6868	9	2
	408	6	4730-00-701-7737	345	35
	457	6		348	33
	459	2	5340-00-702-2848	41	11
	468	8		473	4
	472	15		474	2

CROSS-REFERENCE INDEXES

NATIONAL STOCK NUMBER INDEX

STOCK NUMBER	FIG.	ITEM	STOCK NUMBER	FIG.	ITEM
5340-00-702-2848	475	30	2520-00-722-7074	KITS	130
5360-00-704-4253	191	20	5970-00-724-1910	BULK	40
6145-00-705-6674	BULK	86	5305-00-724-5812	333	20
5940-00-705-6702	86	35	5305-00-724-6783	368	9
5940-00-705-6703	75	17	5340-00-724-7038	59	9
	76	17		83	18
	93	10		84	3
5940-00-705-6708	75	7		88	21
	76	10		91	9
	80	6		95	44
	83	4		410	21
	85	21		414	18
	86	14		416	21
	87	3		428	20
5940-00-705-6709	76	5	5305-00-724-7219	140	8
	85	30		147	8
	86	20	5305-00-724-7220	140	10
	89	6		147	11
5940-00-705-6711	75	16		157	21
	76	16		158	14
	80	4	5305-00-724-7222	462	15
	81	18	5305-00-724-7228	194	8
	83	1	5305-00-724-7247	185	3
	86	36	5305-00-724-7248	186	4
5940-00-705-6714	75	2		196	1
5940-00-705-6715	75	15		457	18
	76	15	5305-00-724-7254	186	3
5305-00-709-8283	234	19		196	1
5305-00-716-7680	180	14		196	12
5305-00-719-5003	248	29		470	8
5305-00-719-5017	246	11	5305-00-724-7263	196	16
5305-00-719-5021	339	14	5305-00-724-7264	196	12
	409	12		196	16
	411	16	5305-00-725-2317	36	16
	413	3		205	20
	415	3		245	23
	486	11		270	9
5305-00-719-5221	390	2		270	13
5305-00-719-5235	437	12		270	30
5305-00-719-5239	437	12		272	34
5305-00-719-5240	191	12		273	3
5305-00-721-5665	482	14		274	26
5310-00-721-7809	35	12		275	22
	398	12		277	12
5320-00-721-9062	197	22		286	34
	199	46		463	21
	212	17		490	1
	288	9	5340-00-725-5280	75	38
	289	20		77	20
2520-00-722-7074	KITS	13		177	12

CROSS-REFERENCE INDEXES

NATIONAL STOCK NUMBER INDEX

STOCK NUMBER	FIG.	ITEM
5340-00-725-5280	178	22
6220-00-726-1916	63	1
5305-00-726-2525	203	20
5305-00-727-2283	437	8
5340-00-727-4774	394	1
4730-00-728-2393	6	10
5930-00-728-4328	55	19
	56	16
5305-00-728-6274	213	26
	214	21
6220-00-729-9295	63	2
5340-00-731-9611	480	7
5305-00-732-0511	103	18
	363	21
5310-00-732-0558	44	4
	62	8
	75	42
	77	1
	89	9
	401	11
	490	15
5360-00-735-1126	128	57
5310-00-735-5396	191	24
5940-00-735-5520	44	13
	44	19
	44	24
	69	11
	69	36
	72	16
	474	11
	480	26
5930-00-736-3539	39	29
	59	19
5315-00-737-0134	403	9
4820-00-752-9040	29	9
5315-00-753-3895	202	22
5306-00-753-6996	403	13
2530-00-753-7285	169	21
5330-00-753-9072	67	5
5315-00-754-0848	153	21
5320-00-754-0992	198	5
	238	6
5325-00-754-1155	428	8
5310-00-755-7283	199	5
3110-00-756-2022	128	44
5305-00-757-8122	75	44
	488	13
5305-00-757-8287	379	5
5310-00-761-0654	16	26
	39	11
5310-00-761-0654	205	34
	206	23
	286	8
5310-00-761-3706	283	10
	285	10
5310-00-761-6882	64	12
	252	9
	494	10
	495	14
5305-00-763-7829	225	1
5310-00-763-8906	476	11
5310-00-763-8919	165	6
	179	12
5340-00-764-7051	83	19
	85	28
	88	24
	92	21
	95	46
	335	4
	468	11
5340-00-764-7052	77	11
5315-00-765-2190	279	19
6240-00-765-8443	47	2
5310-00-768-0318	69	1
	363	20
5310-00-768-0319	43	49
	62	27
	487	11
5331-00-770-0242	387	15
5310-00-770-0243	387	16
5975-00-771-6634	85	17
	86	10
5310-00-772-0442	36	6
	38	6
	407	3
5365-00-772-2322	80	9
	84	27
	85	9
	86	5
5935-00-772-2353	84	26
	86	23
5935-00-772-3307	85	14
	86	19
5935-00-773-1428	83	28
	88	45
5310-00-774-9073	390	4
5310-00-775-5139	39	37
5305-00-777-2284	39	57
5305-00-781-3926	1	5
	272	23

CROSS-REFERENCE INDEXES

NATIONAL STOCK NUMBER INDEX

STOCK NUMBER	FIG.	ITEM
5305-00-781-3926	272	35
	272	38
	273	1
	273	4
	274	25
	275	3
	277	12
	286	32
5305-00-781-3927	277	31
	288	10
5305-00-781-3928	274	12
	274	23
	277	31
	288	6
5305-00-781-3930	170	21
	275	14
5305-00-782-9489	23	14
	24	22
	202	35
	272	38
	273	4
	274	13
	398	22
	412	4
	428	3
	490	3
4910-00-785-6437	505	15
5310-00-789-0398	349	15
4730-00-789-0951	177	3
	178	1
5945-00-789-3706	49	9
5935-00-790-4614	56	11
5320-00-801-1548	348	11
2590-00-801-2355	51	8
5310-00-802-4701	482	10
7510-00-802-8311	BULK	92
	BULK	93
4730-00-803-6266	334	11
5325-00-803-7305	99	25
	133	7
5935-00-806-4183	93	11
5310-00-807-1466	273	14
	275	13
	276	9
5310-00-807-1475	279	14
5310-00-807-1476	279	17
5310-00-807-1477	279	26
5935-00-807-4109	62	22
	366	31
	386	9
5935-00-807-4109	469	10
	483	1
4240-00-807-6856	311	7
	312	3
4730-00-808-5090	311	13
	312	9
5340-00-809-1490	75	23
	88	37
	400	11
5340-00-809-1492	77	4
	83	5
	84	29
	88	13
	96	22
	125	12
	315	10
	478	2
5340-00-809-1494	44	17
	44	17
	64	27
	75	29
	84	11
	88	19
	338	29
	339	25
	408	33
	480	22
5340-00-809-1500	75	50
	77	22
5310-00-809-3078	4	31
	10	7
	11	25
	71	11
	180	20
	203	2
	206	3
	233	2
	243	16
	247	6
	248	19
	266	15
	430	35
5310-00-809-3079	363	24
	455	5
5310-00-809-4058	12	1
	16	21
	19	4
	21	18
	42	7
	50	14

CROSS-REFERENCE INDEXES

NATIONAL STOCK NUMBER INDEX

STOCK NUMBER	FIG.	ITEM	STOCK NUMBER	FIG.	ITEM
5310-00-809-4058	51	2	5310-00-809-4058	327	46
	62	28		328	14
	64	14		331	26
	64	21		343	16
	69	4		365	16
	70	11		365	25
	84	19		366	16
	84	21		368	22
	141	15		375	29
	155	5		379	14
	169	11		382	5
	177	11		397	9
	178	3		408	28
	197	29		429	12
	203	12		430	15
	204	12		475	8
	206	25		492	8
	207	7		497	4
	211	27	5310-00-809-4061	1	3
	212	26		8	1
	214	5		37	11
	225	42		170	22
	227	30	5310-00-809-4085	36	2
	238	19		38	2
	241	13		136	4
	243	7		169	15
	246	23		171	2
	248	26		202	33
	249	1		234	9
	250	13		234	9
	250	18		239	6
	267	2		239	6
	267	4		271	10
	267	4		271	25
	269	31		313	22
	272	3		398	4
	280	49		402	9
	281	49		408	19
	287	24		438	18
	288	21		456	16
	288	29		462	11
	292	10		472	11
	293	30		475	11
	294	5	5310-00-809-5997	209	13
	304	8		292	19
	312	2		429	37
	321	12	5310-00-809-5998	33	2
	323	8		142	17
	325	14		150	17
	326	11		151	17

CROSS-REFERENCE INDEXES

NATIONAL STOCK NUMBER INDEX

STOCK NUMBER	FIG.	ITEM
5310-00-809-5998	165	9
	166	6
	293	9
	295	7
	295	13
	363	17
	390	3
	455	3
5310-00-809-8533	385	10
5310-00-809-8546	46	10
5310-00-811-0966	291	4
	291	4
	297	4
	297	4
5310-00-811-3494	252	4
	252	4
	379	3
5305-00-813-2785	375	10
	375	25
5310-00-814-0672	152	4
	272	24
5310-00-814-0673	74	6
	83	25
	152	4
	153	25
	154	6
	169	33
	189	6
	190	1
	205	1
	206	10
	206	13
	208	29
	209	8
	211	19
	212	16
	225	28
	226	12
	230	16
	242	5
	250	23
	266	1
	268	10
	268	29
	269	16
	284	12
	288	20
	292	15
	328	6
	328	15
5310-00-814-0673	329	9
	339	22
	364	7
	375	31
	390	5
	401	9
	409	4
	411	4
	413	6
	414	11
	415	14
	416	14
	417	11
	418	8
	419	9
	420	4
	423	4
	428	14
	429	18
	463	12
	468	7
	480	4
5315-00-814-3529	230	11
5315-00-815-8840	153	4
	155	17
5315-00-816-1794	165	7
	166	7
5310-00-817-4623	261	14
5310-00-820-6653	193	6
5305-00-821-3869	23	23
	24	27
	251	26
	251	44
	272	27
	285	4
	414	2
	470	14
	471	6
	486	8
5330-00-823-4881	406	17
5325-00-823-5999	198	2
	199	11
	225	23
	239	9
	317	7
	321	8
	325	19
	373	6
	376	7
	376	11

CROSS-REFERENCE INDEXES

NATIONAL STOCK NUMBER INDEX

STOCK NUMBER	FIG.	ITEM
5310-00-823-8803	193	5
	199	41
	437	4
5310-00-823-8804	5	6
	15	20
	18	3
	21	2
	21	28
	253	2
	494	4
	495	12
	496	7
5970-00-827-6566	44	14
	313	14
4240-00-828-3952	308	3
5315-00-828-5487	4	13
5315-00-829-1480	368	8
5325-00-832-5650	62	16
5305-00-832-5743	62	15
5310-00-832-6852	46	14
5340-00-833-8476	66	5
	79	21
	410	18
	412	15
5935-00-833-8561	86	25
	366	33
	386	12
	472	7
	475	2
	479	5
	483	8
5970-00-833-8562	75	13
	76	11
5310-00-834-7606	438	12
5310-00-834-8732	44	6
5315-00-839-2325	21	19
	21	29
	238	18
	250	10
5315-00-839-2326	274	5
	276	31
5315-00-839-5820	202	18
	243	9
	293	10
5315-00-839-5821	134	1
2540-00-840-0022	328	12
5310-00-840-6222	169	14
5315-00-840-9653	243	11
5305-00-841-2044	72	14
5315-00-842-3044	97	6
5315-00-842-3044	99	18
	101	1
	133	9
	153	13
	155	19
	202	39
	205	21
	243	23
	244	9
	390	14
5340-00-843-7825	65	20
	88	30
	89	14
	95	28
	96	20
	327	30
5330-00-843-9235	172	12
	KITS	
5306-00-844-0036	438	5
5315-00-846-0126	191	8
	453	15
5935-00-846-3884	83	35
	86	37
5305-00-846-5703	268	17
	272	27
	274	12
	277	48
2920-00-848-3292	380	15
5330-00-848-4439	176	11
2530-00-848-4581	167	12
5310-00-849-6882	191	9
5310-00-850-7004	144	10
	144	18
	152	10
	152	18
	170	3
	170	9
	170	13
	170	19
	183	5
	185	14
	187	18
	188	14
	195	8
	437	10
5310-00-852-8593	498	10
3110-00-854-1504	148	6
5340-00-854-6729	93	17
	96	23
	412	21

CROSS-REFERENCE INDEXES

NATIONAL STOCK NUMBER INDEX

STOCK NUMBER	FIG.	ITEM	STOCK NUMBER	FIG.	ITEM
5340-00-854-6729	425	17	9905-00-893-3570	44	15
	426	23		44	21
	427	23		44	26
5340-00-854-6730	416	16		69	13
	428	16		69	22
5305-00-855-0957	277	40		69	27
	294	2		69	38
5310-00-855-1102	52	16		72	6
5330-00-855-6045	4	24		72	18
5930-00-856-1654	482	2		81	6
5305-00-857-6886	274	10		81	12
	276	12		94	3
	277	1		474	13
5320-00-864-6203	199	48		480	19
5320-00-865-8994	498	15		480	28
4730-00-871-6729	10	9		480	33
5310-00-877-5796	328	13	5925-00-894-8015	50	10
5310-00-877-5797	368	36	5310-00-896-0903	170	23
	379	49		194	7
	393	15		195	9
5310-00-877-5975	398	9		202	30
4730-00-877-6298	178	9		425	10
	436	5		426	12
	477	4		427	11
6220-00-880-1624	60	4	4730-00-897-5497	178	19
5120-00-880-4268	503	4		334	12
5310-00-880-7744	71	2		366	10
	209	5		385	11
	226	21	5320-00-899-0981	213	29
	230	5		214	19
	235	8		270	16
	236	6		315	3
	295	10		337	12
	363	13	5975-00-899-4606	282	10
5310-00-880-7746	137	1	5305-00-900-2546	382	1
5310-00-880-9344	216	5	3110-00-900-2560	118	2
	221	5		120	11
5340-00-881-5303	11	8	4730-00-900-3296	178	15
5325-00-886-1067	247	8	5935-00-900-6281	366	32
5310-00-889-2528	327	15		386	11
5310-00-889-2543	55	10		469	11
5305-00-889-3000	43	34		483	3
5305-00-889-3001	43	39	2920-00-900-8163	406	16
5305-00-889-3002	45	51	5305-00-901-2099	394	5
5310-00-889-8782	140	2	5305-00-901-2134	385	13
	147	2	9905-00-901-2942	357	7
5315-00-890-3461	390	11	5305-00-901-7250	390	7
3110-00-892-0896	148	19	5975-00-903-2284	98	6
9905-00-893-3570	41	5		99	3
	41	15	5975-00-903-2288	98	6

CROSS-REFERENCE INDEXES

NATIONAL STOCK NUMBER INDEX

STOCK NUMBER	FIG.	ITEM	STOCK NUMBER	FIG.	ITEM
5310-00-905-0762	213	11	5310-00-922-2017	370	17
	240	23		465	3
	311	14		487	3
	313	1	5340-00-922-6300	58	11
	315	12		59	11
	327	42		84	2
	425	9		88	22
	426	6		93	22
	427	10		95	31
	457	5		96	28
5340-00-905-0790	485	6		306	9
5310-00-905-4600	59	3		310	4
	136	14		338	28
4730-00-908-3193	301	4		379	2
	303	6		410	20
	304	2		414	19
	364	3		416	19
	365	10		428	18
	368	14	5340-00-922-6301	41	20
	379	39	5340-00-926-5449	313	20
	496	15	5325-00-928-6214	65	7
4730-00-908-3194	268	32	4010-00-929-0041	BULK	54
	310	7		BULK	67
	379	9		BULK	68
4730-00-908-6292	10	15	5340-00-929-1794	477	7
	24	2	2910-00-930-9367	366	25
	331	20	5310-00-931-8167	41	25
4730-00-908-6293	387	2		203	21
4730-00-908-6294	27	1		204	9
	337	26		473	6
	343	3		474	9
	368	20	2510-00-933-2893	266	7
	387	5	2510-00-933-2895	266	7
2920-00-909-2483	35	6	5310-00-933-4310	282	7
4730-00-909-8627	17	14		403	3
	29	8		433	2
	379	34		435	3
5306-00-911-5005	433	1	5310-00-933-8118	282	15
4730-00-911-5707	6	1	5310-00-933-8119	482	18
	177	3	5310-00-934-9747	333	28
5310-00-913-5474	70	8	5310-00-934-9748	282	16
5305-00-914-6131	392	7	5310-00-934-9751	45	49
5305-00-915-8087	2	14		327	36
	156	22		333	18
4030-00-916-2141	191	18	5310-00-934-9754	380	1
5310-00-922-2017	64	15	5310-00-934-9757	48	1
	64	25	5310-00-934-9758	64	16
	67	3		64	26
	225	49		88	43
	226	29		208	28

CROSS-REFERENCE INDEXES

NATIONAL STOCK NUMBER INDEX

STOCK NUMBER	FIG.	ITEM
5310-00-934-9758	213	14
	214	10
	240	1
	240	13
	240	20
	241	7
	269	2
	283	26
	327	32
	335	14
	336	11
5310-00-934-9764	63	5
	85	6
	169	19
	246	33
	286	16
	293	15
5310-00-935-9021	2	15
	23	4
	24	10
	26	6
	52	23
	103	17
	144	4
	144	14
	152	14
	159	4
	160	9
	164	4
	169	1
	187	10
	189	2
	190	3
	205	9
	210	14
	245	30
	251	45
	266	24
	268	19
	270	19
	270	21
	272	29
	273	22
	273	22
	274	17
	275	19
	276	19
	277	4
	278	12
	283	8
5310-00-935-9021	285	9
	286	29
	288	13
	292	16
	293	6
	329	12
	369	10
	398	25
	409	8
	410	9
	411	14
	412	7
	414	9
	415	13
	416	10
	425	16
	426	20
	427	20
	428	10
	431	7
	456	18
	463	3
	463	3
	464	1
	470	13
	471	5
	484	13
	490	10
5310-00-935-9022	64	29
	368	18
	379	22
	380	14
	393	12
	411	19
	484	12
	485	17
5331-00-935-9136	3	3
	400	2
	479	3
2530-00-937-1275	KITS	320
2010-00-937-5599	122	26
5310-00-939-0783	404	8
5310-00-941-6019	250	14
	378	10
	378	13
	389	1
5305-00-942-2196	456	22
5310-00-943-2141	271	5
	271	22
9905-00-945-7637	86	2

CROSS-REFERENCE INDEXES

NATIONAL STOCK NUMBER INDEX

STOCK NUMBER	FIG.	ITEM
9905-00-945-7637	94	4
	480	14
5305-00-947-4355	183	17
5305-00-947-4358	181	10
	182	6
5305-00-947-4359	183	8
5305-00-947-4360	183	16
	184	13
5305-00-947-4361	144	1
	152	1
	195	2
5305-00-947-4362	144	22
5305-00-947-4363	471	4
4030-00-948-7315	293	25
4730-00-949-8694	335	5
	336	3
5310-00-950-1310	274	21
5310-00-952-3567	374	12
4730-00-954-1251	18	5
	141	10
4730-00-954-1281	5	1
	436	4
5305-00-954-3937	243	29
5340-00-954-6014	18	11
	89	8
	124	16
	125	16
	159	12
	160	3
	161	12
5320-00-957-2500	357	2
5320-00-957-2507	282	12
5310-00-957-2677	296	2
5305-00-958-4357	72	13
5305-00-958-5246	247	3
	271	15
	338	19
5305-00-958-5253	225	46
	226	25
	226	31
5305-00-958-5254	226	25
	226	31
5305-00-958-5262	383	5
5305-00-958-5469	225	46
	226	31
5305-00-958-5471	249	17
5340-00-958-8457	282	17
	303	3
	338	4
	416	22
5340-00-958-8457	428	21
5305-00-959-2704	382	8
5340-00-960-9340	172	22
2530-00-960-9363	172	13
5340-00-964-5267	75	44
	77	19
5310-00-964-7092	215	4
6240-00-966-3831	62	17
5315-00-973-8637	245	11
9905-00-977-2727	330	4
5930-00-978-8805	55	17
	56	12
5310-00-982-4908	128	55
	129	22
5310-00-982-4939	313	23
5940-00-983-4067	79	7
	485	1
5940-00-983-6105	52	17
5315-00-983-7402	268	8
5331-00-984-3750	314	35
5310-00-984-3807	199	9
	324	9
	325	25
	325	26
5305-00-984-4976	55	3
5305-00-984-4983	55	2
5305-00-984-4988	213	19
	367	16
5305-00-984-4992	79	13
5305-00-984-5675	277	34
5305-00-984-5678	233	1
5305-00-984-6191	47	7
	354	11
5305-00-984-6192	72	21
	73	9
5305-00-984-6193	84	23
	280	36
	281	36
	300	12
	453	5
5305-00-984-6194	52	21
	59	24
	273	11
	379	1
5305-00-984-6195	48	4
	275	7
	282	14
	337	6
	343	10
	378	9

CROSS-REFERENCE INDEXES

NATIONAL STOCK NUMBER INDEX

STOCK NUMBER	FIG.	ITEM
5305-00-984-6195	378	25
	380	3
5305-00-984-6196	280	10
	281	10
5305-00-984-6197	50	9
5305-00-984-6199	213	33
	214	26
5305-00-984-6210	213	20
	214	17
	299	1
	430	7
5305-00-984-6211	63	7
5305-00-984-6212	35	13
	88	41
	202	3
	284	13
	293	11
5305-00-984-6213	203	32
	222	12
5305-00-984-6214	272	19
	281	16
5975-00-984-6582	64	28
	81	11
	160	2
	469	2
	470	7
5310-00-984-7042	73	3
	482	9
5305-00-984-7341	377	5
5305-00-984-7342	251	17
	251	42
	252	20
5305-00-984-7343	323	14
	429	15
5305-00-984-7363	412	23
5340-00-984-8540	19	13
	88	11
	89	10
	96	26
	338	15
	339	24
	414	23
5340-00-984-8541	44	11
4730-00-985-4804	505	16
5975-00-985-6630	75	21
	83	38
	85	31
	89	12
	94	10
	95	27
5975-00-985-6630	96	32
	178	8
	335	15
	336	12
	338	18
	408	9
	436	3
	483	2
5340-00-988-1162	80	14
5305-00-988-1170	267	17
	267	17
5305-00-988-1171	237	12
5305-00-988-1724	97	2
	237	7
	330	3
5305-00-988-1725	49	8
	51	1
	59	25
	75	37
	83	29
	84	18
	88	36
	213	6
	214	2
	267	1
	280	14
	281	14
	313	5
	316	15
	320	14
	320	26
	321	28
	378	20
5305-00-988-1727	198	18
	213	8
	254	21
	376	17
5340-00-988-3186	365	21
5305-00-988-7614	315	9
5305-00-988-9106	248	10
5315-00-989-0534	244	11
5305-00-989-0830	292	8
	293	19
5340-00-989-1771	77	3
	338	13
	484	2
5305-00-989-6265	39	32
	393	11
	404	3
5305-00-989-7434	45	43

CROSS-REFERENCE INDEXES

NATIONAL STOCK NUMBER INDEX

STOCK NUMBER	FIG.	ITEM	STOCK NUMBER	FIG.	ITEM
5305-00-989-7434	52	29	5305-00-993-2457	376	20
	54	6		382	4
	55	20		389	7
	56	7	5305-00-993-2460	391	1
	59	23	6620-00-993-5546	66	10
	282	2	5340-00-993-6207	77	14
	317	5		89	15
	338	10		334	15
	398	15		366	20
5305-00-989-7435	52	28		368	42
	95	25		379	46
	207	10		386	6
	255	6	5305-00-995-3440	46	18
	258	5	5305-00-995-3444	58	7
	260	8		63	7
	337	19		247	10
	338	9		256	2
	379	53		257	3
5340-00-989-9222	83	9		260	14
	84	9		262	9
	88	20		263	9
	95	33		291	2
	282	5		291	2
	385	2		297	6
	414	15		297	6
5310-00-990-1361	487	5	5310-00-995-4130	72	8
5305-00-990-6444	43	36	5305-00-995-6311	368	27
	45	30	5310-00-997-1888	88	39
	45	47		324	28
	52	27		375	19
	485	26		375	27
5340-00-990-7610	332	24		378	27
5305-00-990-8632	273	1	6220-00-998-6142	62	19
	274	25	4730-01-003-5105	123	4
	276	22		141	23
	277	31		149	12
5305-00-993-0190	43	37		313	8
	297	7		399	6
	297	7		457	2
5305-00-993-1848	52	3	4720-01-003-6706	BULK	20
	54	11		BULK	25
	55	22	4730-01-004-8346	141	20
	59	18	4820-01-005-2994	363	3
	79	24	5305-01-005-6715	243	27
	96	19	5305-01-006-2052	252	37
	246	2	5305-01-006-2053	208	25
	251	31		279	29
	252	34		429	11
	255	33	5305-01-006-5736	303	11
	325	9	2540-01-008-1501	348	26

CROSS-REFERENCE INDEXES

NATIONAL STOCK NUMBER INDEX

STOCK NUMBER	FIG.	ITEM	STOCK NUMBER	FIG.	ITEM
5310-01-009-9785	337	13	5310-01-025-6444	383	8
5310-01-012-8962	24	9	5120-01-026-1666	511	9
	393	4	4240-01-026-3112	307	1
9905-01-013-8723	65	6		308	7
	65	14	5340-01-026-3250	203	10
	75	3		378	12
	76	3	3110-01-027-4475	142	9
	79	8		150	9
	80	3		151	9
	81	4	5310-01-027-9392	KITS	75
	81	10	5320-01-029-8205	239	8
	81	16	5305-01-032-4165	40	16
	83	2		407	5
	84	30	5310-01-032-4169	40	47
	85	2	5325-01-032-4222	40	13
	89	3	5310-01-032-4827	40	48
	90	3	9905-01-032-7002	394	4
	91	4	2530-01-033-1855	172	9
	92	5	2530-01-033-4237	172	11
	93	7		KITS	
	95	3	5320-01-033-8637	208	23
	96	3	5320-01-033-8638	208	39
4720-01-014-4915	BULK	71	5320-01-033-8643	205	19
5305-01-016-4344	453	18	5320-01-033-9126	208	35
5305-01-016-5469	71	12	2530-01-034-1715	172	21
5310-01-016-9348	283	18	5320-01-034-1884	321	24
5340-01-017-4630	13	3		376	22
	14	3	5325-01-034-2757	40	15
9905-01-017-4748	348	10	5975-01-034-5871	98	7
5310-01-018-5332	324	16		332	8
5320-01-019-5694	355	3		369	2
	370	21		468	1
5310-01-021-9027	167	10		470	4
5320-01-023-2529	28	4		470	4
	65	18		472	6
	198	1		473	7
	199	10		474	1
	225	22		475	3
	229	2		479	4
	316	8		480	1
	318	10		492	14
	320	6	5940-01-035-4212	79	9
	320	29		485	2
	324	15	5935-01-035-5139	367	9
	324	37	5305-01-035-8766	74	9
	325	30	5342-01-036-0649	237	3
	370	11	5330-01-037-0663	62	9
2540-01-023-5116	191	10	3110-01-037-4661	40	14
2520-01-024-1273	12	31	5340-01-038-1493	74	11
5330-01-025-4212	121	22	5310-01-038-8500	172	1

CROSS-REFERENCE INDEXES

NATIONAL STOCK NUMBER INDEX

STOCK NUMBER	FIG.	ITEM	STOCK NUMBER	FIG.	ITEM
5310-01-038-8501	172	10	5310-01-069-5243	282	16
5310-01-038-9579	375	11		435	5
	375	14		453	7
5305-01-039-6633	44	28	9390-01-070-5959	351	4
3110-01-040-6541	172	7	4730-01-070-7680	12	40
4730-01-042-5266	505	17		149	6
5310-01-042-8391	40	50		399	3
	407	45	5340-01-071-2047	18	12
5330-01-043-5572	100	2		124	12
	100	5	4010-01-072-1167	433	5
5330-01-044-0703	KITS	54	4730-01-074-0060	327	26
5320-01-044-7545	199	28	5305-01-075-0957	243	20
5310-01-046-0186	40	37		308	4
5310-01-046-5371	487	6	5306-01-075-8519	209	12
5310-01-046-5382	340	9		430	12
5325-01-047-3201	323	11	5330-01-076-6172	62	10
	326	10	5305-01-076-6308	43	45
5970-01-048-9378	485	4	2920-01-078-5769	404	5
4730-01-048-9769	384	4	5310-01-078-5996	261	1
5340-01-049-9564	13	24	5305-01-078-8929	406	35
	14	11	5330-01-080-3253	104	15
5970-01-049-9948	BULK	41	5310-01-080-5746	487	13
5895-01-050-2072	274	20	5305-01-080-9109	406	6
5310-01-050-6565	40	6	5310-01-081-0469	406	2
	407	39	5977-01-082-3613	406	18
5305-01-052-4438	280	7	5120-01-082-6436	503	6
5340-01-053-7128	224	2	5120-01-082-6447	503	7
5310-01-057-3098	351	3	5305-01-083-1591	465	2
4730-01-058-0900	149	11	4820-01-083-7993	176	10
5310-01-058-3353	382	10	5331-01-084-1200	148	16
4720-01-058-7213	BULK	69	5305-01-084-6067	124	17
5340-01-059-0114	72	9		125	17
5331-01-061-3000	467	9		366	3
	493	7	5320-01-084-6101	197	26
	494	12		199	37
	496	16		290	10
5310-01-062-6864	79	14	5320-01-084-9234	211	24
5310-01-063-8522	351	2		212	23
4730-01-066-1278	6	9		258	9
5310-01-066-6759	19	18		259	1
	233	4		260	17
	233	4	5320-01-084-9235	197	24
	266	16		199	38
	389	12		212	8
5306-01-068-4592	409	5		224	15
	411	11		287	3
	415	10	5920-01-085-0825	52	13
3010-01-068-6996	45	12		59	14
2920-01-068-7182	KITS	77	5365-01-085-0910	121	3
5310-01-069-5243	74	4	5310-01-085-1208	377	11

CROSS-REFERENCE INDEXES

NATIONAL STOCK NUMBER INDEX

STOCK NUMBER	FIG.	ITEM
5320-01-085-1755	211	23
9320-01-085-2889	494	21
5320-01-085-9995	197	19
	199	20
	287	28
	293	32
5320-01-086-1143	197	10
	199	16
5320-01-086-1147	287	16
5320-01-086-1148	287	13
	290	3
5330-01-086-5457	KITS	67
5305-01-087-4478	5	9
5340-01-087-4612	230	23
	231	28
	235	19
5310-01-088-2490	340	2
5325-01-088-7468	327	19
4730-01-088-7798	7	6
	333	3
5310-01-088-7962	254	14
4730-01-091-2809	15	13
	16	12
4730-01-092-1904	331	2
	332	9
5310-01-093-3493	492	17
	216C	19
6635-01-093-3710	499	1
6220-01-094-1440	62	1
5315-01-094-9025	403	11
5330-01-096-7699	78	2
5330-01-096-9650	172	19
2530-01-097-7659	172	3
5305-01-097-8178	350	10
2640-01-098-2029	167	21
2530-01-098-6827	KITS	37E
5310-01-100-2067	62	5
5360-01-101-2143	245	13
5305-01-101-3312	457	4
5310-01-101-6046	340	8
5340-01-101-8262	18	2
5310-01-102-3270	13	17
	14	24
	15	2
	16	2
	17	8
	27	12
	29	4
	43	47
	46	24
5310-01-102-3270	97	3
	99	7
	124	11
	125	11
	153	2
	155	13
	169	28
	198	21
	202	25
	203	6
	204	2
	233	5
	233	5
	241	4
	243	14
	244	8
	245	10
	245	17
	245	33
	246	17
	247	2
	247	14
	248	6
	249	11
	249	26
	249	35
	250	6
	251	2
	254	2
	254	20
	255	2
	267	14
	269	12
	269	27
	270	2
	270	2
	271	8
	272	9
	274	4
	274	9
	275	4
	276	2
	276	30
	277	22
	285	2
	286	38
	331	10
	332	3
	333	8
	398	17

CROSS-REFERENCE INDEXES

NATIONAL STOCK NUMBER INDEX

STOCK NUMBER	FIG.	ITEM	STOCK NUMBER	FIG.	ITEM
5310-01-102-3270	399	14	5310-01-119-1024	234	5
	400	12		234	5
	409	10		338	26
	411	2		374	8
	411	9		439	2
	413	4		463	11
	415	16	5310-01-119-3668	231	7
	430	23	5310-01-119-3675	7	2
	430	37	4730-01-119-6895	15	21
	453	9		16	16
	484	7	5305-01-120-4363	388	8
	486	6	5310-01-121-1703	2	9
5310-01-102-7356	154	1		26	11
5310-01-103-6042	198	8		174	6
	198	14		184	2
	481	8		184	2
5305-01-104-4846	187	8		186	2
5342-01-104-7700	245	15		187	12
5310-01-105-9398	293	8		188	23
6220-01-107-2613	62	2		242	7
5331-01-107-4950	6	2		271	17
5305-01-108-7471	436	11		271	29
5305-01-109-0587	323	6		285	7
5340-01-110-4036	245	28		315	6
	478	5		408	18
5305-01-111-2774	187	2		437	7
5306-01-114-0963	37	1		438	3
	408	3		453	11
	475	29		456	4
	476	4	5305-01-122-0253	121	16
5305-01-117-3396	321	10	2540-01-123-1218	368	16
	325	12	3040-01-123-4942	172	8
	376	9	5340-01-125-1682	353	7
5310-01-117-3446	243	15	2540-01-125-6154	388	16
5360-01-118-5907	274	3	5310-01-126-4751	178	20
4730-01-118-8278	11	2	5310-01-126-9404	329	12
	13	6	5310-01-127-2456	100	7
	14	6		173	1
	19	11	2520-01-127-3969	116	17
	27	4	6220-01-128-0087	62	4
	124	9	5975-01-128-0390	345	7
	177	2	5365-01-129-0399	271	13
	334	16	5306-01-130-0457	463	8
	386	7	5310-01-130-4274	196	7
5310-01-119-1024	83	24	5120-01-130-8865	500	4
	169	32	5310-01-132-8275	12	12
	209	9	5325-01-135-4290	268	35
	225	3	5310-01-135-4730	131	1
	231	8	5320-01-135-7319	197	11
	231	15		199	15

CROSS-REFERENCE INDEXES

NATIONAL STOCK NUMBER INDEX

STOCK NUMBER	FIG.	ITEM	STOCK NUMBER	FIG.	ITEM
5320-01-135-7319	211	3	5970-01-142-2282	BULK	36
	213	37	5310-01-143-0512	12	20
	214	30		23	22
	218	1		127	14
	219	1	5310-01-143-1679	39	45
	227	39		39	76
	237	17	5305-01-143-2328	327	40
	278	1		477	8
	291	6		480	2
	291	6	5320-01-143-5075	197	27
	292	5		199	35
	365	1		208	13
	366	26		213	36
	368	5		214	29
	369	8		220	6
	379	21		300	15
4730-01-135-8310	148	30	5320-01-143-5079	369	15
5320-01-136-1782	64	2	5977-01-143-6996	39	68
	197	8	5310-01-144-2779	172	18
	197	8	5120-01-144-4484	499	3
	199	17	5325-01-144-4871	68	8
	199	17	5330-01-145-5376	39	69
	212	9	6620-01-146-8006	30	1
	229	5	5935-01-147-0148	95	21
	238	11		96	2
	287	1	5310-01-147-4052	144	2
	289	6		152	2
5320-01-136-1785	219	4		166	2
	287	14		183	7
	290	8		188	17
5320-01-136-1787	288	3		188	29
	290	5		470	10
5325-01-136-4880	407	21	2930-01-147-4198	30	3
5310-01-136-4888	40	17	2590-01-147-4285	4	2
	407	6	4820-01-147-4294	100	3
5325-01-136-7662	40	12	5305-01-147-5864	39	52
	407	19	5998-01-147-7895	39	74
5310-01-138-2605	314	23	5310-01-147-8743	490	5
5330-01-138-5190	KITS		2990-01-147-9284	7	3
	KITS	57	5330-01-147-9698	128	16
5305-01-138-9540	46	4	5330-01-147-9808	31	4
	97	11	5310-01-148-0240	68	4
	97	11	4710-01-148-2659	11	1
	367	1	5310-01-148-2681	144	15
5305-01-139-4293	225	9	5310-01-148-2687	129	35
5307-01-140-6594	268	36	4730-01-148-2758	30	17
5305-01-140-9118	175	7		31	2
	272	24	5306-01-148-3667	11	6
4030-01-142-0456	276	4	5305-01-148-5915	8	4
5970-01-142-2282	96	17	5330-01-148-7492	104	7

CROSS-REFERENCE INDEXES

NATIONAL STOCK NUMBER INDEX

STOCK NUMBER	FIG.	ITEM	STOCK NUMBER	FIG.	ITEM
5340-01-148-7528	10	5	5307-01-150-1549	31	13
5340-01-148-7529	11	31	2520-01-150-2279	111	10
5340-01-148-8349	10	4	2520-01-150-2280	113	7
6680-01-148-8875	66	4	2520-01-150-3931	112	15
3020-01-148-9548	128	41	2520-01-150-3932	109	3
4710-01-148-9580	11	11		110	3
4710-01-148-9581	11	28		111	16
4710-01-148-9582	11	17		112	16
5330-01-149-0874	30	12	5310-01-150-4003	127	8
2520-01-149-1221	106	2		136	3
	107	2		152	14
4320-01-149-1866	121	1		271	12
5340-01-149-1867	121	4		271	27
2520-01-149-1868	114	3		398	8
5305-01-149-1938	31	8		464	8
	31	8	5340-01-150-4106	11	19
2520-01-149-3809	113	16	5306-01-150-4835	104	4
5340-01-149-4434	399	8	4820-01-150-4964	118	11
2520-01-149-4993	128	61	5325-01-150-4982	106	15
	129	33		107	23
3020-01-149-5049	111	14	5310-01-150-5919	116	24
4710-01-149-5075	11	30		117	10
4710-01-149-5076	11	12	5310-01-150-5921	121	20
4710-01-149-5077	11	23	5330-01-150-5928	116	20
5935-01-149-5165	76	2	5330-01-150-5944	10	1
	79	6	5307-01-150-5991	8	3
	86	27		8	3
5306-01-149-6280	4	4	5307-01-150-5992	365	17
	8	5	5340-01-150-6026	11	15
	30	16	5360-01-150-6086	116	6
	30	16		117	5
5360-01-149-6308	176	9	5360-01-150-6087	116	8
3040-01-149-6706	111	1	5360-01-150-6091	109	7
3040-01-149-6759	116	2		111	7
5310-01-149-7793	121	11	5325-01-150-6092	109	13
5340-01-149-7811	116	21	5330-01-150-6239	116	10
2520-01-149-7861	106	11	5340-01-150-6275	11	20
	KITS		5935-01-150-6319	100	4
4730-01-149-7935	118	5	2520-01-150-7609	113	3
3020-01-149-7938	106	23	5330-01-150-7744	4	28
3020-01-149-7941	106	10	5340-01-150-7774	11	29
	107	8	5360-01-150-7829	116	23
5305-01-149-9673	31	11		117	9
3040-01-150-0407	106	7	5325-01-150-7830	113	1
4730-01-150-0879	6	6		114	10
4710-01-150-0971	11	16	5935-01-150-8322	86	26
5306-01-150-1190	31	12	5306-01-150-8713	118	10
5307-01-150-1227	8	2	5999-01-150-8808	86	7
	30	5	5306-01-150-9497	104	13
5305-01-150-1521	11	14	5307-01-150-9538	11	7

CROSS-REFERENCE INDEXES

NATIONAL STOCK NUMBER INDEX

STOCK NUMBER	FIG.	ITEM	STOCK NUMBER	FIG.	ITEM
5307-01-150-9538	12	17	5306-01-152-4693	22	1
5305-01-150-9781	4	25	5306-01-152-4696	128	21
2520-01-151-3570	KITS	63		130	21
4710-01-151-3663	118	6	5306-01-152-4849	406	27
2520-01-151-3857	116	15	4710-01-152-5798	104	14
5310-01-151-4137	116	3	5330-01-152-5941	121	19
5315-01-151-4180	9	5	5330-01-152-5942	118	13
5306-01-151-4925	9	6	5315-01-152-9029	100	15
5340-01-151-4964	116	5	5315-01-152-9031	116	4
3040-01-151-5663	116	9	5315-01-152-9038	117	7
	117	16	5315-01-152-9039	116	7
5330-01-151-6106	118	1		117	7
5325-01-151-6117	4	3	5315-01-152-9040	116	7
5310-01-151-7347	140	7		117	7
	147	7	5365-01-153-0872	104	5
	170	20	5360-01-153-0933	113	8
	185	4	4710-01-153-1636	11	18
	187	3	4730-01-153-1871	345	40
	195	11		348	32
	196	2	5930-01-153-8215	68	10
	457	19	5935-01-153-9320	76	13
	470	11	5340-01-153-9425	177	14
5330-01-151-8364	118	3	2520-01-154-1185	118	14
5340-01-151-9956	11	4	5905-01-154-2354	498	6
5340-01-151-9957	11	32	3120-01-154-4369	106	30
5310-01-152-0598	51	4		107	25
	69	34	5935-01-154-6233	79	5
	77	13	5340-01-154-6559	116	22
	83	15		117	8
	83	31	5330-01-154-7159	4	10
	83	31	3120-01-154-7174	106	14
	88	17		106	28
	88	29		107	15
	95	40		107	24
	155	6	3120-01-154-8516	106	30
	304	7		107	25
	313	11	3120-01-154-8517	106	30
	320	18		107	25
	320	31	5325-01-154-8561	106	3
	378	19		107	3
	408	34	5325-01-154-8562	107	1
	410	33	9320-01-155-2369	BULK	64
	412	14	5310-01-155-2503	7	5
	416	25		10	6
	453	3		75	27
	457	13		101	4
	480	23	3110-01-155-2600	128	67
3120-01-152-2613	128	73	3120-01-155-3509	128	42
6680-01-152-2845	176	1	5330-01-155-4383	113	13
5310-01-152-4229	121	12	5330-01-155-4393	128	70

CROSS-REFERENCE INDEXES

NATIONAL STOCK NUMBER INDEX

STOCK NUMBER	FIG.	ITEM	STOCK NUMBER	FIG.	ITEM
3110-01-155-4438	109	15	5342-01-160-4397	4	5
3110-01-155-4440	128	1	5325-01-160-4618	11	13
	130	38	5315-01-160-4642	128	10
3120-01-155-4462	121	17		130	23
3120-01-155-4463	121	17	5325-01-160-4693	106	32
3120-01-155-4464	121	17		113	5
3120-01-155-4465	121	17		114	5
3120-01-155-4466	121	17	2520-01-160-9570	118	7
3120-01-155-4467	121	17	5331-01-160-9857	467	7
3120-01-155-4468	113	9		493	1
	114	18		496	11
3120-01-155-4470	128	40	2530-01-161-0005	167	8
4320-01-155-5145	176	6	2530-01-161-0006	167	2
4320-01-155-5153	176	13	2520-01-161-2136	104	1
4720-01-155-7784	BULK	27	3120-01-161-4033	106	30
3120-01-155-8713	128	43		107	25
3110-01-155-9862	128	37	4820-01-161-6435	496	10
4720-01-156-0549	BULK	12	5970-01-161-6796	BULK	34
5330-01-156-5147	4	7	5310-01-161-7308	54	13
3120-01-156-5189	106	8	3120-01-162-5787	106	30
	121	5		107	25
3120-01-156-8763	111	15	5340-01-162-5883	108	10
	112	14	5305-01-162-8512	12	2
5331-01-157-1884	176	14	2520-01-162-8985	132	3
5325-01-157-6764	128	25		132	7
	128	47		132	14
	130	41		132	21
5340-01-158-0098	79	4	5310-01-162-9661	404	4
5325-01-158-2182	113	6		406	31
	114	4	5305-01-162-9713	176	12
5306-01-158-6224	7	1	5970-01-163-1103	BULK	38
5310-01-158-6257	75	36	5330-01-163-2614	116	1
	77	17		117	3
3120-01-158-6304	106	18	4710-01-163-2805	345	33
2520-01-158-6854	KITS	65		348	28
9905-01-158-7981	357	4	5340-01-163-4773	150	34
5306-01-158-9917	12	22		151	40
5340-01-159-1788	121	7	5930-01-163-6256	55	7
2530-01-159-2732	106	27	4730-01-163-7163	105	3
5330-01-159-2811	128	52	3040-01-163-7208	4	8
	129	25	2520-01-163-7213	KITS	66
3120-01-159-5773	106	30	2520-01-163-7866	109	11
	107	25		111	6
4720-01-159-5796	BULK	26	5935-01-163-8981	348	2
5340-01-159-6626	11	24	5935-01-163-8987	348	8
	11	24	4730-01-164-7028	8	8
2520-01-159-7757	128	80	2520-01-164-7157	116	11
	129	38		KITS	64
2590-01-159-8757	132	2	2520-01-164-7158	100	9
	132	15	2520-01-164-7234	102	1

CROSS-REFERENCE INDEXES

NATIONAL STOCK NUMBER INDEX

STOCK NUMBER	FIG.	ITEM	STOCK NUMBER	FIG.	ITEM
4720-01-164-7803	BULK	16	2920-01-168-4129	KITS	78
5306-01-164-8486	118	9	2920-01-168-4130	KITS	79
2540-01-165-0465	345	19	2920-01-168-4131	43	27
	348	19	2920-01-168-4132	43	33
5340-01-165-0745	348	30	5325-01-168-5729	106	12
2540-01-165-0814	351	1	2930-01-168-7870	34	2
5310-01-165-1312	40	8	2815-01-168-7871	4	9
	407	28	4330-01-168-7872	6	5
5360-01-165-1563	4	16	2530-01-168-7876	174	5
5930-01-165-1657	55	18	2520-01-168-7878	128	60
5310-01-165-3331	4	30	2920-01-168-7891	44	2
	7	8	2815-01-168-7892	1	2
	11	26	2910-01-168-7905	9	1
5306-01-165-4283	30	10	2815-01-168-7909	8	7
	128	23	2930-01-168-7911	5	2
	130	19	2815-01-168-7912	4	22
5330-01-165-4333	113	12	2920-01-168-7914	35	5
	121	18	2815-01-168-7917	8	10
6150-01-165-4667	345	26	2815-01-168-7918	8	11
	348	24	2540-01-168-9482	351	9
5306-01-165-5582	4	12	3110-01-169-0734	KITS	61
2540-01-165-8175	345	31	5120-01-169-4876	501	2
	348	25	2520-01-169-7674	111	2
2540-01-165-8176	345	29	4720-01-169-9891	BULK	15
	348	31		BULK	18
2520-01-165-9563	100	13	5940-01-170-4956	41	4
	118	8		41	14
5342-01-166-1534	11	21		313	15
5340-01-166-1672	25	2		474	11
	103	5	5310-01-170-8765	411	18
5331-01-166-1712	493	3	2520-01-170-9826	111	12
4730-01-166-2244	104	3	5325-01-171-3392	109	5
	105	11		110	10
3120-01-166-3677	106	29		111	9
3110-01-166-5667	KITS			112	9
5325-01-166-6324	128	74	4130-01-171-5997	494	13
3110-01-167-2443	KITS	60	2520-01-171-8258	137	4
3040-01-167-2836	106	31	5310-01-173-0941	163	5
5355-01-167-4114	54	7	5315-01-173-3397	277	19
3120-01-167-4172	KITS			277	46
	KITS	59	4820-01-173-6883	14	28
6685-01-167-4298	67	1	5935-01-173-7654	75	18
5306-01-167-4346	128	64	2510-01-173-9316	266	10
5340-01-167-7794	10	8	2510-01-173-9347	202	1
2520-01-168-1983	106	16	2520-01-173-9673	128	58
2520-01-168-2060	113	4	5340-01-174-2271	142	24
5330-01-168-3870	128	66		143	32
	129	3		150	24
2920-01-168-4127	43	54		151	32
2920-01-168-4128	KITS	74	5935-01-174-3669	75	19

CROSS-REFERENCE INDEXES

NATIONAL STOCK NUMBER INDEX

STOCK NUMBER	FIG.	ITEM	STOCK NUMBER	FIG.	ITEM
2530-01-174-4174	142	31	5307-01-174-8640	129	7
	150	31	5315-01-174-8644	116	7
5340-01-174-4894	394	3		117	7
2520-01-174-5849	148	15	5315-01-174-8645	116	7
2520-01-174-5919	132	11		117	7
3020-01-174-5984	142	29	5315-01-174-8646	116	7
	150	29		117	7
3020-01-174-5985	142	10	5315-01-174-8647	116	7
	150	10		117	7
2530-01-174-7441	156	1	3040-01-174-9130	148	1
2540-01-174-7696	206	14	2520-01-174-9287	128	26
3020-01-174-7810	128	79	2520-01-174-9288	128	31
5330-01-174-8090	116	12	2520-01-174-9291	128	5
5310-01-174-8091	128	20	2520-01-174-9554	128	18
	129	36		129	34
3110-01-174-8136	109	16	2520-01-174-9580	148	12
5330-01-174-8145	148	14	5310-01-175-0617	148	10
5330-01-174-8146	148	7	3020-01-175-1962	128	75
3120-01-174-8153	113	10	3110-01-175-3538	KITS	46
	KITS	69	5365-01-175-3593	KITS	
5365-01-174-8154	128	28	2520-01-175-6401	128	13
3120-01-174-8155	128	33	3020-01-175-6477	128	32
3120-01-174-8156	128	78	2520-01-175-6492	113	2
5310-01-174-8158	128	11	2520-01-175-6494	132	1
	130	22	5340-01-175-7208	140	9
5365-01-174-8174	KITS		2530-01-175-7210	152	6
	KITS	20	2530-01-175-7211	144	6
5365-01-174-8184	KITS	45	2530-01-175-7212	144	20
5365-01-174-8185	128	29		152	20
5365-01-174-8186	142	4	2530-01-175-7213	144	20
	150	4		152	20
	151	4	2920-01-175-7214	66	2
5306-01-174-8492	128	56	2510-01-175-7216	182	11
5340-01-174-8493	142	13	2510-01-175-7217	183	12
	150	13	2510-01-175-7218	183	22
	151	13	2510-01-175-7219	182	17
5310-01-174-8607	142	21	2520-01-175-7220	103	1
	150	21	2510-01-175-7221	179	11
	151	28	9520-01-175-7222	184	5
5360-01-174-8613	132	5	2510-01-175-7224	181	17
5360-01-174-8614	132	10	5945-01-175-7318	118	4
5331-01-174-8618	128	77	5325-01-175-7442	387	13
5305-01-174-8625	148	24	5306-01-175-7577	167	3
5325-01-174-8626	106	19	3010-01-176-0557	128	39
	107	21	5330-01-176-0825	142	12
3120-01-174-8630	128	35		150	12
3120-01-174-8631	128	34		151	12
5310-01-174-8632	142	8	5310-01-176-0839	142	25
	150	8		150	25
5307-01-174-8640	128	68		151	33

CROSS-REFERENCE INDEXES

NATIONAL STOCK NUMBER INDEX

STOCK NUMBER	FIG.	ITEM	STOCK NUMBER	FIG.	ITEM
5331-01-176-0923	167	4	9905-01-181-9456	357	3
2940-01-176-1427	489	1	5340-01-182-1074	22	2
5120-01-176-1845	500	5	4730-01-182-6565	30	15
3040-01-176-2835	132	9		31	7
2520-01-176-2840	132	12	3120-01-182-8417	121	17
2530-01-176-4649	152	6	5331-01-183-0971	6	8
2530-01-176-4650	144	6	5930-01-183-6637	66	9
2540-01-176-6521	205	12	5930-01-183-6757	67	7
3040-01-176-9584	128	76	5340-01-183-7233	60	3
3040-01-176-9615	128	53		61	3
3040-01-177-2427	128	46	5999-01-183-9530	327	20
3040-01-177-2428	128	36	5905-01-183-9636	333	1
3020-01-177-5441	128	24	4720-01-184-0432	BULK	94
	128	48	6160-01-184-0643	71	1
5365-01-177-5720	142	26	6160-01-184-0728	71	5
	150	26	2920-01-184-1054	45	21
	151	34	2910-01-184-2159	15	10
4730-01-177-7501	104	23	5995-01-184-2228	79	1
4910-01-178-0722	500	3	2540-01-184-4389	165	4
4910-01-178-0724	510	1	2590-01-184-4475	184	3
4910-01-178-6551	511	7	4730-01-184-4760	141	25
5307-01-178-7445	31	10	5330-01-184-5421	158	8
4910-01-178-8865	499	5	2510-01-184-5497	331	12
2520-01-178-9768	128	72	2910-01-184-5498	331	5
5120-01-179-1032	503	8		332	6
4910-01-179-2517	503	5	2910-01-184-5499	331	1
5360-01-179-4106	192	1	2540-01-184-5500	328	10
5360-01-179-4107	192	1	2520-01-184-5501	97	1
4710-01-179-4346	400	5	2540-01-184-5502	99	4
6680-01-179-4349	400	4	2540-01-184-5503	327	23
6680-01-179-4350	3	4	5995-01-184-5544	80	1
4820-01-179-4869	511	15	5995-01-184-5545	75	1
4910-01-179-5530	502	3	5310-01-184-5784	194	2
2530-01-179-7511	KITS		5935-01-184-6417	85	24
2530-01-179-7589	163	1		86	15
2530-01-179-7590	164	1	5330-01-184-6492	103	10
2590-01-179-7602	313	12		400	6
5365-01-180-2585	148	5	5330-01-184-6500	6	3
5940-01-180-3655	69	5	2540-01-184-6602	230	3
	481	1	4730-01-184-6971	159	8
6625-01-180-6542	47	10		160	6
2920-01-180-8666	43	23		161	9
6685-01-180-9037	47	9		162	17
5330-01-180-9099	150	11	2520-01-184-7036	99	22
	151	11	6680-01-184-9214	103	8
5970-01-180-9776	75	8	2530-01-184-9821	156	19
6620-01-181-1757	47	11	5305-01-185-0114	213	24
2530-01-181-3907	100	14		225	15
5365-01-181-5085	142	23		226	9
	150	23		234	14

CROSS-REFERENCE INDEXES

NATIONAL STOCK NUMBER INDEX

STOCK NUMBER	FIG.	ITEM	STOCK NUMBER	FIG.	ITEM
5305-01-185-0114	246	6	2530-01-185-3879	158	12
	254	16	2540-01-185-4387	235	9
	260	20	3040-01-185-4388	99	21
	260	25		133	11
	287	7	2590-01-185-4390	240	16
	321	22		429	26
	326	5	2590-01-185-4391	240	16
5342-01-185-0116	225	56	5305-01-185-4628	156	2
	226	37	5310-01-185-4672	137	17
5340-01-185-0386	205	3	5340-01-185-4959	225	5
	206	8		226	40
5340-01-185-0401	225	45	4730-01-185-5348	12	41
	226	32		135	3
5340-01-185-0404	225	43		141	26
5330-01-185-0587	21	24		149	14
6680-01-185-1264	67	4		399	4
5305-01-185-2211	216	8	2510-01-185-6112	2	4
	221	4	2510-01-185-6113	2	10
2510-01-185-3107	205	37	2510-01-185-6114	2	12
5365-01-185-3108	204	4	2510-01-185-6115	2	1
9515-01-185-3109	267	15	2540-01-185-6117	46	8
9515-01-185-3110	267	19	2510-01-185-6118	205	22
9515-01-185-3111	267	8	2540-01-185-6119	240	8
2590-01-185-3112	277	11	4710-01-185-6179	10	3
2540-01-185-3113	277	24	2510-01-185-6647	182	19
3110-01-185-3114	277	9	2510-01-185-6648	182	19
2590-01-185-3115	314	32	4720-01-185-6673	BULK	22
2590-01-185-3116	314	24		BULK	31
9515-01-185-3118	267	12	2540-01-185-6710	185	9
9515-01-185-3119	267	20	2590-01-185-6711	182	12
9905-01-185-3127	358	2		183	20
9905-01-185-3129	354	12	2530-01-185-6712	157	23
9905-01-185-3131	354	12		158	13
9905-01-185-3132	354	12	2530-01-185-6713	157	20
9905-01-185-3134	354	12		158	15
9905-01-185-3138	354	12	2530-01-185-6714	158	9
9905-01-185-3139	354	12	2510-01-185-6715	202	29
9905-01-185-3143	355	1	5315-01-185-6967	226	20
2510-01-185-3155	268	3	5340-01-185-6997	225	10
6105-01-185-3187	314	27	5340-01-185-6998	225	27
2540-01-185-3197	187	1	5340-01-185-7024	225	18
3040-01-185-3201	314	8	5306-01-185-7048	138	18
6680-01-185-3202	400	3		139	15
	479A	3		145	18
9905-01-185-3207	358	3		146	15
7690-01-185-3208	358	1		175	10
2540-01-185-3216	365		5306-01-185-7052	137	16
	402			239	11
	402	KITA	5306-01-185-7071	71	3
9340-01-185-3757	225	55	5305-01-185-7122	179	7

CROSS-REFERENCE INDEXES

NATIONAL STOCK NUMBER INDEX

STOCK NUMBER	FIG.	ITEM	STOCK NUMBER	FIG.	ITEM
5305-01-185-7122	180	8	5305-01-185-8647	462	9
	184	11	5305-01-185-8657	157	17
5310-01-185-7188	69	6		158	1
	70	5	5305-01-185-8672	157	18
5310-01-185-7208	69	8		158	17
	70	3	5305-01-185-8673	156	15
5310-01-185-7214	12	11	5305-01-185-8674	240	4
	364	1		240	18
	436	7		240	22
5310-01-185-7218	138	19		269	6
	139	16	5310-01-185-8689	194	9
	145	19	5310-01-185-8690	157	19
	146	16		158	16
5315-01-185-7421	21	27	5310-01-185-8691	156	12
2510-01-185-7945	204	11	5310-01-185-8692	328	4
2510-01-185-7946	206	17	5330-01-185-8709	331	17
2590-01-185-7947	314	30	5330-01-185-8714	206	11
3020-01-185-7948	314	7	5330-01-185-8715	205	40
2590-01-185-7949	314	6	5340-01-185-8723	230	17
2510-01-185-7950	204	11	5340-01-185-8724	266	5
2540-01-185-7951	403	2	5315-01-185-8781	165	1
5120-01-185-7955	501	5		166	1
5120-01-185-7956	501	8	5340-01-185-8820	240	14
5120-01-185-7957	502	9	5340-01-185-8821	202	27
5340-01-185-7959	398	18	4730-01-185-9453	19	22
5120-01-185-7960	501	21		27	9
5120-01-185-7962	502	8	2540-01-185-9530	202	17
5120-01-185-7963	503	2	2530-01-185-9651	170	6
5120-01-185-7964	502	2	2540-01-185-9656	21	26
4910-01-185-7966	504	2	4710-01-185-9665	161	6
9905-01-185-7970	355	4	4710-01-185-9666	159	1
9905-01-185-7972	354	12	4710-01-185-9667	159	5
9905-01-185-7973	354	12		160	8
9905-01-185-7975	354	12	4710-01-185-9668	159	7
9905-01-185-7977	354	20	2540-01-186-0501	185	5
2530-01-185-7998	158	10		187	5
3040-01-185-8011	314	9	4710-01-186-0665	13	16
2540-01-185-8015	403	14		14	23
2540-01-185-8016	402	1	4820-01-186-0822	159	2
5120-01-185-8024	501	10	2590-01-186-0863	179	10
4720-01-185-8152	12	8		180	16
6150-01-185-8240	327	18	3040-01-186-0967	165	10
4710-01-185-8328	161	13	2540-01-186-0969	327	10
4710-01-185-8329	161	8	4710-01-186-1009	13	1
5340-01-185-8619	203	8	4710-01-186-1010	13	5
5340-01-185-8620	179	14	4710-01-186-1016	159	10
	180	23	5310-01-186-1245	197	34
5305-01-185-8647	199	4	5340-01-186-1280	266	6
	225	19		284	4
	232	4	5340-01-186-1281	266	6

CROSS-REFERENCE INDEXES

NATIONAL STOCK NUMBER INDEX

STOCK NUMBER	FIG.	ITEM	STOCK NUMBER	FIG.	ITEM
5340-01-186-1281	284	4	5342-01-186-7382	226	23
5365-01-186-1294	196	3	5340-01-186-7593	225	25
	196	8	5340-01-186-7594	225	11
5340-01-186-1388	202	32	5340-01-186-7658	202	8
5340-01-186-1817	157	10	5340-01-186-7664	183	6
	158	6	5310-01-186-7702	79	15
4720-01-186-2358	BULK	23	3120-01-186-7714	21	23
2510-01-186-3106	197	28	3120-01-186-7715	205	27
2510-01-186-3107	199	34	5330-01-186-7757	15	29
9515-01-186-3111	267	21		16	40
5180-01-186-3114	499	8	5365-01-186-7764	193	1
9905-01-186-3253	354	12	5980-01-186-8319	46	2
9905-01-186-3255	354	12	2590-01-186-8704	331	33
9905-01-186-3259	354	12	5340-01-186-8768	19	17
2510-01-186-3311	204	8	5340-01-186-9496	202	38
5310-01-186-3483	222	13	5340-01-186-9606	15	31
2590-01-186-3614	99	1		16	18
3040-01-186-3718	194	10	4710-01-186-9617	15	9
5360-01-186-3737	21	25		15	9
2530-01-186-3740	195	10		16	8
5360-01-186-4844	99	26	4710-01-186-9620	161	5
5360-01-186-4845	165	12		162	5
	166	3	5307-01-187-0519	4	17
5310-01-186-5237	128	19	5310-01-187-0678	374	15
	128	63	5980-01-187-0791	46	3
5306-01-186-5369	188	27	5340-01-187-0892	13	2
5310-01-186-5420	156	13		14	2
5340-01-186-5520	205	41		141	21
3120-01-186-5527	144	7		408	15
	144	21	2920-01-187-1310	45	8
	152	7	5325-01-187-1604	23	19
	152	21		24	18
5315-01-186-5633	202	37		26	2
4730-01-186-5994	19	15	2510-01-187-2238	46	1
4720-01-186-6018	27	5	2510-01-187-2239	194	3
2910-01-186-6038	15	16	4720-01-187-3386	29	7
2540-01-186-6039	191	4	4720-01-187-3387	7	7
5310-01-186-6930	69	9	5310-01-187-3485	193	2
5310-01-186-7066	69	7	2510-01-187-3606	278	4
	473	8	5120-01-187-3607	503	1
	0070	4	5120-01-187-3659	502	4
5306-01-186-7128	181	14	5120-01-187-3660	502	1
5306-01-186-7129	205	25	5330-01-187-5148	15	26
5340-01-186-7173	2	13		16	34
3120-01-186-7181	158	4	4710-01-187-6759	13	9
5340-01-186-7229	205	28		14	16
5365-01-186-7233	158	3	4720-01-187-6911	5	10
5342-01-186-7236	196	5	4730-01-187-6929	6	4
	196	15	5342-01-187-7029	12	36
5342-01-186-7382	225	35	2990-01-187-7030	23	10

CROSS-REFERENCE INDEXES

NATIONAL STOCK NUMBER INDEX

STOCK NUMBER	FIG.	ITEM	STOCK NUMBER	FIG.	ITEM
2510-01-187-7031	182	7	3040-01-188-3684	144	17
2510-01-187-7033	183	25		152	17
2540-01-187-7034	181	15	2530-01-188-3685	144	8
2510-01-187-7037	193	8		152	8
2590-01-187-7039	156	20	2940-01-188-3776	12	25
2530-01-187-7161	156	18	2920-01-188-3863	20	1
2990-01-187-7168	23	5	3020-01-188-3885	34	20
5305-01-187-8757	46	9	4720-01-188-3909	29	2
	331	13	5315-01-188-4490	225	37
	332	27	5340-01-188-5072	99	5
9905-01-187-9468	355	2	2590-01-188-5079	245	14
5305-01-187-9555	73	7	2590-01-188-5080	245	38
4710-01-188-0028	29	10	2590-01-188-5081	245	1
	364	8	3120-01-188-5082	275	15
5310-01-188-0745	169	3		276	14
5365-01-188-0782	4	23	5360-01-188-5083	268	33
	104	12	6140-01-188-5113	247	4
5330-01-188-0911	12	38	2940-01-188-5117	12	23
5340-01-188-1017	136	17	2520-01-188-5131	148	11
	137	11	5305-01-188-5133	102	2
5340-01-188-1018	225	21	7690-01-188-5144	356	5
	226	5	4710-01-188-6050	15	8
5310-01-188-1093	169	4		16	7
5307-01-188-1229	194	11	5310-01-188-6861	51	13
4720-01-188-1370	29	12		165	11
4720-01-188-3190	BULK	21	2510-01-188-7381	280	40
	BULK	28		281	40
2940-01-188-3224	12	5	5340-01-188-7382	249	29
2590-01-188-3225	225	51	5340-01-188-7383	249	4
	226	34	2590-01-188-7384	246	5
2510-01-188-3228	203	18	2590-01-188-7386	276	10
2540-01-188-3229	235	3	5340-01-188-7393	268	38
5342-01-188-3233	99	27	2590-01-188-7394	270	6
3040-01-188-3234	99	28	2520-01-188-8269	99	19
2590-01-188-3237	240	5	3040-01-188-8292	100	8
4710-01-188-3238	103	9	2530-01-188-8446	153	8
2540-01-188-3239	181	15	4710-01-188-8780	124	3
2590-01-188-3267	17	2	5305-01-188-9707	KITS	80
5995-01-188-3269	81	1	2520-01-189-0594	137	9
2990-01-188-3281	23	7	4710-01-189-0705	124	2
4730-01-188-3296	104	16		125	2
2940-01-188-3387	12	28	4720-01-189-0853	178	17
4710-01-188-3515	124	7	4730-01-189-0871	12	7
	125	6	4330-01-189-0889	19	6
4710-01-188-3516	124	6	2510-01-189-0890	184	6
	125	7	2510-01-189-0891	182	7
2530-01-188-3520	153	7	2530-01-189-0897	68	9
3040-01-188-3607	145	9	4330-01-189-1007	19	1
2540-01-188-3675	235	9	2520-01-189-1064	99	16
2930-01-188-3682	30	18	2590-01-189-1067	225	53

CROSS-REFERENCE INDEXES

NATIONAL STOCK NUMBER INDEX

STOCK NUMBER	FIG.	ITEM	STOCK NUMBER	FIG.	ITEM
2590-01-189-1067	226	35	5310-01-189-8476	160	5
2540-01-189-1074	185	1		161	10
4710-01-189-1080	124	4		162	16
2520-01-189-1636	138	11	5310-01-189-8485	165	8
	145	11	2930-01-189-8643	34	17
3040-01-189-1637	138	7	2910-01-189-8851	4	11
2930-01-189-1744	34	5	4730-01-189-8854	15	12
2530-01-189-1745	184	10		16	11
2940-01-189-1809	12	3	2510-01-189-9717	207	1
2510-01-189-1832	193	4	2510-01-189-9720	204	11
4820-01-189-2107	333	37	9515-01-189-9721	267	12
3040-01-189-2134	99	24	2510-01-189-9724	320	19
2520-01-189-2135	KITS			324	24
3040-01-189-2172	133	14	2510-01-189-9725	320	19
2540-01-189-2193	191	6		324	24
2530-01-189-2195	170	11	4710-01-189-9727	273	23
4710-01-189-2208	161	11	9515-01-189-9728	205	37
4710-01-189-2209	161	3	2540-01-189-9729	204	11
4720-01-189-2218	333	38	2510-01-189-9730	204	3
2510-01-189-3456	209	7	9515-01-189-9731	267	15
2540-01-189-3457	319	1	9515-01-189-9732	267	8
2510-01-189-3459	320	5	9515-01-189-9733	267	20
	324	10	2590-01-189-9734	273	6
2510-01-189-3460	320	5	2590-01-189-9736	274	24
	324	10		276	21
2540-01-189-3461	323		5330-01-189-9738	23	3
2540-01-189-3706	320	1		24	15
2540-01-189-3707	322	1	2510-01-189-9741	268	16
7690-01-189-3736	361	6	5365-01-189-9743	204	4
7690-01-189-3737	361	2	2510-01-189-9744	206	17
7690-01-189-3738	361	1	9515-01-189-9745	267	19
7690-01-189-3739	361	5	9515-01-189-9746	267	19
7690-01-189-3740	359	2	2590-01-189-9747	274	14
	361	3	2510-01-189-9748	280	40
5305-01-189-3769	34	19		281	40
4730-01-189-4600	489	2	2520-01-189-9750	128	4
2910-01-189-4770	15	1	2510-01-189-9828	274	1
5977-01-189-4988	KITS			276	25
5342-01-189-5452	196	4	5340-01-189-9861	12	15
	196	14	5340-01-189-9979	202	15
2520-01-189-6726	133	10	3110-01-189-9980	21	22
5340-01-189-6748	21	14	5342-01-189-9982	2	7
5340-01-189-7554	331	37	5340-01-190-0333	179	18
	332	26		180	28
5340-01-189-7558	68	2	5340-01-190-0402	12	29
5340-01-189-7640	161	2	5340-01-190-0807	136	1
	162	2		137	14
5340-01-189-7739	266	19	5340-01-190-0810	194	5
5310-01-189-8468	34	4	5340-01-190-0815	244	19
5310-01-189-8476	159	9	2990-01-190-1089	23	15

CROSS-REFERENCE INDEXES

NATIONAL STOCK NUMBER INDEX

STOCK NUMBER	FIG.	ITEM	STOCK NUMBER	FIG.	ITEM
2990-01-190-1089	24	24	4820-01-191-4262	172	6
5930-01-190-1231	54	9	3120-01-191-4637	KITS	83
5306-01-190-2193	71	4	7690-01-191-6467	359	7
5340-01-190-2248	141	18	2920-01-191-6534	KITS	84
	181	13	5325-01-191-7555	208	22
3040-01-190-3574	138	9	5340-01-191-8161	170	16
4330-01-190-3579	KITS			195	5
2510-01-190-3862	193	4	5340-01-191-8186	225	14
5305-01-190-4073	19	2		240	11
5306-01-190-4553	19	3		251	16
5310-01-190-4607	34	14		251	24
5340-01-190-5100	15	27		251	30
	16	36		251	40
5306-01-190-5760	136	2		252	18
	136	2		252	33
	137	15		252	38
5307-01-190-5854	34	12		253	6
5315-01-190-5908	266	20		253	11
5360-01-190-6214	34	11		253	16
5360-01-190-6218	99	15		253	26
2540-01-190-7079	333	11		253	31
5360-01-190-7234	KITS			255	5
5330-01-190-7509	KITS			255	11
5330-01-190-7510	KITS	15		255	15
	KITS	150		255	24
5355-01-190-7635	99	2		255	31
5307-01-190-7650	103	12		256	3
5342-01-190-7735	103	15		257	2
9905-01-190-8425	354	12		258	4
9905-01-190-8427	354	12		259	4
2510-01-190-8458	204	3		260	1
7690-01-190-8501	359	5		262	2
	360	3		262	10
5325-01-191-0595	194	4		263	2
5340-01-191-0746	15	25		264	3
	16	35		265	3
5340-01-191-0748	15	24		289	2
	16	31		429	9
2510-01-191-0971	204	8		430	5
7690-01-191-1312	359	6		430	21
7690-01-191-1313	359	1		430	32
7690-01-191-1314	359	10	2530-01-191-8740	KITS	17
7690-01-191-1315	359	9		KITS	42
7690-01-191-1316	359	8	2530-01-191-8741	KITS	470
5315-01-191-2611	133	4	6680-01-191-8783	488	2
5340-01-191-3222	203	17	3020-01-191-8784	148	27
3120-01-191-3232	99	23	7690-01-191-8793	359	4
	133	8	2520-01-192-1260	109	9
5340-01-191-3359	206	12	3040-01-192-1632	230	15
5340-01-191-3526	15	32	5306-01-192-2207	169	26

CROSS-REFERENCE INDEXES

NATIONAL STOCK NUMBER INDEX

STOCK NUMBER	FIG.	ITEM	STOCK NUMBER	FIG.	ITEM
2920-01-192-2956	KITS	81	5365-01-193-4479	403	20
2920-01-192-2959	KITS	85	5342-01-193-7088	488	15
2590-01-192-3021	314	22	5945-01-193-7175	51	5
3040-01-192-3673	488	20	4730-01-193-7390	345	12
2590-01-192-4425	399	11		348	17
2920-01-192-4473	KITS	82	5977-01-193-9931	68	11
2920-01-192-4474	KITS		2540-01-194-0197	277	26
2540-01-192-4500	199	30	5330-01-194-0472	8	9
2540-01-192-4501	403	15	5330-01-194-0473	15	11
2540-01-192-4502	399	12		16	10
2540-01-192-4504	269	10	5310-01-194-0481	34	3
2590-01-192-4525	277	8	5325-01-194-0562	17	3
4810-01-192-5817	177	5	5365-01-194-0761	267	16
2540-01-192-5937	277	41	5340-01-194-0887	270	7
2510-01-192-5947	199	32		340	5
2540-01-192-5948	267	10	5340-01-194-0888	270	27
2540-01-192-5949	277	28	2590-01-194-2048	250	22
	278	9	2530-01-194-2049	170	10
2510-01-192-5950	270	15	5342-01-194-3128	197	13
4520-01-192-6073	343	9		199	54
4710-01-192-6113	277	42	2540-01-194-3323	345	1
7690-01-192-6369	361	10		387	4
7690-01-192-6370	361	9	5365-01-194-5093	270	18
7690-01-192-6371	359	3	5340-01-194-5294	4	14
6625-01-192-7498	69	28	4720-01-194-5334	398	32
4820-01-192-7678	399	18	5342-01-194-5806	269	30
4710-01-192-7965	268	31	5360-01-194-6070	271	4
4820-01-192-8030	399	2		271	21
4730-01-192-8086	141	19	5306-01-194-6433	97	5
2540-01-192-8283	270	15	5310-01-194-6459	277	36
5331-01-192-8892	34	6	6620-01-194-6586	66	11
5330-01-192-8916	203	16	2590-01-194-6979	249	37
4710-01-192-9546	268	37	2590-01-194-6980	249	30
2540-01-192-9711	403	5	2590-01-194-6981	249	5
2540-01-192-9712	403	1	2590-01-194-6990	333	35
	403	6	5310-01-194-7066	199	56
2540-01-192-9715	403	21		208	7
2540-01-192-9716	267	7		331	34
2540-01-192-9718	277	21	4010-01-194-8546	266	8
4710-01-192-9720	277	15		284	5
2540-01-192-9721	269	10	5331-01-194-8966	34	10
2510-01-192-9723	278	4	5306-01-195-0277	269	17
5340-01-193-0251	15	28	5331-01-195-1500	34	9
	16	39	5305-01-195-1575	69	3
2510-01-193-1807	207	1	5995-01-195-1918	282	1
6220-01-193-1970	62	14	6680-01-195-2146	488	12
5330-01-193-2338	266	9	5120-01-195-2721	501	4
2540-01-193-2711	403	22	4730-01-195-3803	400	7
5365-01-193-2951	169	18	3040-01-195-4173	281	33
9905-01-193-4065	354	5	5120-01-195-4551	501	11

CROSS-REFERENCE INDEXES

NATIONAL STOCK NUMBER INDEX

STOCK NUMBER	FIG.	ITEM	STOCK NUMBER	FIG.	ITEM
5365-01-195-4949	277	5	2540-01-196-5317	280	22
5340-01-195-5397	243	19	2510-01-196-5506	280	40
5305-01-195-5818	8	14		281	40
5360-01-195-6200	243	25	5325-01-196-5631	245	8
5325-01-195-8002	71	6	5365-01-196-5636	245	4
5342-01-195-8039	280	15	2590-01-196-7281	BULK	46
	281	15	5340-01-196-7733	246	26
5340-01-195-8057	315	2	5330-01-196-7968	280	26
5340-01-195-8837	269	22	5330-01-196-7969	281	26
5331-01-195-8889	488	19	5340-01-196-8028	403	17
5330-01-195-9049	270	24	5340-01-196-8158	269	23
5330-01-195-9083	268	2	5310-01-197-1100	270	36
5340-01-195-9107	280	18	5310-01-197-1161	209	1
	281	18	5340-01-197-1294	220	2
5180-01-195-9777	500	2		230	20
5120-01-196-0084	501	1		231	25
5315-01-196-0277	277	25		235	16
5340-01-196-0572	277	38	5340-01-197-1444	268	12
2590-01-196-1290	321	7	5306-01-197-1492	108	1
	325	11	5315-01-197-1494	323	9
	376	6		326	8
2540-01-196-1291	321	13	5305-01-197-1594	271	2
	376	10		271	19
3040-01-196-1493	281	33	2530-01-197-2160	170	17
4710-01-196-1642	3	2		195	6
5340-01-196-2573	403	19	5340-01-197-2382	398	28
5365-01-196-2699	243	18	5340-01-197-2438	62	24
5355-01-196-2770	133	1	5340-01-197-2642	270	25
5340-01-196-3297	267	19	5340-01-197-2716	270	29
5307-01-196-4717	4	26	5340-01-197-2717	268	7
5340-01-196-4720	188	4	5340-01-197-2736	269	18
2540-01-196-4721	188	16	5315-01-197-3122	245	5
2540-01-196-4722	188	16	5306-01-197-3274	150	27
2540-01-196-4723	188	21	5306-01-197-3277	153	10
2530-01-196-4724	208	1	5325-01-197-3460	153	22
2540-01-196-4726	12	33		332	21
2540-01-196-4920	188	7	5340-01-197-3461	26	9
5307-01-196-4937	142	32	5340-01-197-3478	245	19
	150	32	5330-01-197-3620	208	31
	151	24	2590-01-197-4898	317	6
2590-01-196-5228	4	1		2590	5
2510-01-196-5311	203	4	2590-01-197-4899	272	37
5342-01-196-5312	209	11	2540-01-197-4900	280	22
2540-01-196-5313	225	8		281	22
	325	2		281	22
2590-01-196-5314	321	7	5340-01-197-4901	280	9
	325	11	2590-01-197-5446	199	49
	376	6	2540-01-197-5447	197	7
2510-01-196-5316	280	15	2540-01-197-5448	197	2
	281	15	2540-01-197-5449	365	6

CROSS-REFERENCE INDEXES

NATIONAL STOCK NUMBER INDEX

STOCK NUMBER	FIG.	ITEM	STOCK NUMBER	FIG.	ITEM
2540-01-197-5450	368	4	5340-01-197-8673	317	10
2540-01-197-5460	365	23		321	23
2540-01-197-5463	374	20		323	15
5999-01-197-5465	410	KITS		326	6
5895-01-197-5467	412	KIT		377	6
5340-01-197-5469	286	4	5340-01-197-8674	228	13
5340-01-197-5470	416	5		248	16
2590-01-197-5474	286	39		429	14
2590-01-197-5475	286	39	5340-01-197-8675	280	6
2540-01-197-5476	325	15		281	6
5340-01-197-5477	198	17	3040-01-197-8727	272	26
	321	20	2540-01-197-8735	323	1
	325	23	5365-01-197-9383	280	21
2540-01-197-5478	324	1		281	21
7690-01-197-5500	356	4	5305-01-197-9417	463	14
	357	1	2510-01-198-0333	398	2
	404	17	5340-01-198-0480	75	49
2530-01-197-5502	490	14		77	27
5975-01-197-5505	409	3	3020-01-198-0633	35	22
	411	3	5340-01-198-0686	375	9
	430	48		375	13
3040-01-197-5510	368	41		378	8
2540-01-197-5525	325	5		378	14
2540-01-197-5526	326	1	5305-01-198-1619	324	11
2540-01-197-5528	375	4		324	25
2510-01-197-5546	378	11	5305-01-198-1621	272	14
2510-01-197-5547	375	12	5310-01-198-1722	53	5
	378	11	5310-01-198-1723	225	20
5340-01-197-5548	37	5		246	15
	408	7		251	35
5995-01-197-5554	82	1		252	32
5310-01-197-6253	254	26		253	27
	287	6		254	18
5340-01-197-6714	281	29		255	30
5340-01-197-6715	245	2		263	3
5340-01-197-6716	245	6		264	6
5340-01-197-6753	268	39		266	11
5340-01-197-6755	277	49		318	6
5305-01-197-7547	68	12		333	27
5315-01-197-7563	275	8		429	16
5340-01-197-8239	269	25	5310-01-198-1724	197	4
5330-01-197-8298	268	15		417	8
	295	6		430	18
2510-01-197-8572	246	20	5340-01-198-2240	280	8
	253	24		281	8
	254	19	5340-01-198-2241	280	8
5340-01-197-8673	216	3		281	8
	252	19	5340-01-198-2248	247	17
	253	36		249	39
	266	12	5340-01-198-2249	246	16

CROSS-REFERENCE INDEXES

NATIONAL STOCK NUMBER INDEX

STOCK NUMBER	FIG.	ITEM	STOCK NUMBER	FIG.	ITEM
5340-01-198-2253	271	30	5340-01-199-2206	319	5
	274	16		320	3
5340-01-198-2254	249	24		322	4
5340-01-198-2255	246	10		324	4
	247	20	5325-01-199-2254	322	6
	248	11		324	6
	249	14	5310-01-199-2293	227	32
5340-01-198-2256	249	43		377	2
5340-01-198-2257	249	45	2910-01-199-2355	10	2
2590-01-198-2895	317	6	9905-01-199-2371	367	2
	373	5	2540-01-199-2390	378	KITS
5315-01-198-3346	245	12	2920-01-199-2391	404	2
5305-01-198-3385	323	2	2920-01-199-2393	404	KITS
	324	22	2920-01-199-2394	404	11
	324	34	2920-01-199-2395	404	10
	326	2	2540-01-199-2396	366	2
5365-01-198-3399	248	12	5305-01-199-3371	266	13
5365-01-198-3400	248	21		317	9
5365-01-198-3401	248	18		318	5
5310-01-198-3428	280	27	5310-01-199-3440	209	4
	281	27		225	40
5305-01-198-3440	463	7	5340-01-199-3495	245	31
5340-01-198-3457	248	13	5340-01-199-3498	280	6
5365-01-198-3463	248	17		281	6
5310-01-198-3487	280	13	5340-01-199-3499	272	21
	281	13	5340-01-199-3510	375	26
5365-01-198-3505	248	22	5340-01-199-4989	272	30
5330-01-198-3521	429	27	2590-01-199-5423	21	15
	BULK	56	2590-01-199-5425	285	1
	BULK	70	2510-01-199-5748	321	17
	BULK	73	2540-01-199-5812	280	29
5360-01-198-3525	280	43	5340-01-199-6103	269	19
	281	43	2540-01-199-6759	317	1
5340-01-198-5165	246	4		321	2
5340-01-198-5455	269	19		376	1
3040-01-198-5699	99	14	2540-01-199-6760	318	2
2510-01-198-7413	225	34		389	6
	226	24	2540-01-199-6761	318	3
3040-01-198-7473	273	10	2540-01-199-7778	327	5
5340-01-198-7580	280	29	2590-01-199-7977	248	24
2540-01-198-7581	281	29	5340-01-199-8258	247	19
5310-01-198-7585	167	7	5930-01-199-8853	66	3
	167	20	5340-01-199-9679	323	10
5330-01-198-8789	280	26		326	9
5306-01-199-1314	270	3	5330-01-200-0466	23	13
2510-01-199-1498	280	9		24	21
2510-01-199-1499	280	32		398	24
	281	32	1015-01-200-0869	250	17
5340-01-199-1662	268	14		252	6
5340-01-199-1663	246	3		252	6

CROSS-REFERENCE INDEXES

NATIONAL STOCK NUMBER INDEX

STOCK NUMBER	FIG.	ITEM	STOCK NUMBER	FIG.	ITEM
6220-01-200-0897	197	17	2540-01-202-8545	411	15
	199	51		415	17
3040-01-200-1015	280	33	2590-01-202-8546	409	6
2540-01-200-1994	316	9		411	12
	320	9		415	11
	320	21	2540-01-202-8547	208	16
	324	12	2540-01-202-8548	411	8
	324	26	4931-01-202-8692	213	13
	375	17		214	7
	378	17		252	24
2540-01-200-1995	316	14		254	23
	320	12		267	11
	320	24		277	20
	324	19		342	6
	324	31		401	18
	375	22		498	19
	378	22	7690-01-203-0161	361	4
2520-01-200-3096	136	16	2540-01-203-0183	230	18
2520-01-200-3097	136	6		235	10
3120-01-200-4105	268	34	5340-01-203-0324	280	18
4730-01-200-4277	141	9		281	18
	399	20	4010-01-203-0411	243	17
2540-01-200-6611	318	1	4010-01-203-0412	270	4
2540-01-201-2356	281	9	4710-01-203-0607	334	14
2540-01-201-2357	281	9		366	19
5315-01-201-3592	169	5		386	5
5995-01-201-4128	410	3	4710-01-203-0608	334	18
	412	3		366	23
5995-01-201-4129	410	2		384	1
	412	2	4710-01-203-0615	334	13
5365-01-201-4749	280	5		386	4
	280	5	4710-01-203-1304	368	28
	281	5	5340-01-203-1980	197	18
	281	5		199	61
	281	28		227	8
5180-01-201-4978	504	10	6210-01-203-2101	367	4
5995-01-201-7495	410	1	5306-01-203-2637	313	21
	412	1	5340-01-203-2707	248	8
5120-01-201-7857	501	20	5340-01-203-2708	247	28
5306-01-201-7969	133	6	5340-01-203-2821	331	36
5340-01-201-9076	280	6	5342-01-203-2822	198	23
	281	6		280	48
5305-01-202-2676	155	16		281	48
5340-01-202-7445	323	3		321	27
	326	3		377	10
4710-01-202-8245	400	1	5310-01-203-3217	280	20
5330-01-202-8360	273	20		281	20
	BULK	83		429	3
	BULK	85		430	3
2540-01-202-8545	409	11		430	22

CROSS-REFERENCE INDEXES

NATIONAL STOCK NUMBER INDEX

STOCK NUMBER	FIG.	ITEM	STOCK NUMBER	FIG.	ITEM
5310-01-203-3217	430	39	2540-01-203-9872	278	6
5310-01-203-3230	273	9	2510-01-203-9873	278	14
5340-01-203-3273	209	2	2590-01-203-9874	283	24
5340-01-203-4646	247	27	2590-01-203-9875	283	24
5340-01-203-5629	245	3	2510-01-203-9883	184	15
5340-01-203-5630	245	7	9905-01-203-9992	354	10
5340-01-203-5634	243	10	9905-01-203-9994	354	4
	270	38		370	19
5342-01-203-5661	174	3	9905-01-203-9995	354	14
2530-01-203-5662	142	18	9905-01-203-9996	354	17
	150	18	7690-01-204-0076	354	18
2530-01-203-5663	142	33	7690-01-204-0077	354	1
	150	33	2520-01-204-0325	132	6
2540-01-203-5664	184	18	4210-01-204-0913	241	10
2530-01-203-5746	142	1	5310-01-204-1039	73	4
	150	1		434	2
5340-01-203-6538	249	28		435	2
5340-01-203-6539	248	1	5306-01-204-2139	280	28
5340-01-203-6542	319	6	5315-01-204-2328	280	39
	320	4		281	39
	322	5	5340-01-204-2458	280	6
	323	4		281	6
	326	4	5340-01-204-2543	272	36
	375	7	2530-01-204-2583	158	2
5330-01-203-6551	142	2		158	2
	150	2	5340-01-204-2584	183	11
	151	2	5310-01-204-3344	213	25
2540-01-203-7721	316	9		214	20
	320	9	5340-01-204-3862	317	3
	320	21		321	4
	324	12		325	7
	324	26		373	2
	375	17		376	3
	378	17	5340-01-204-3903	334	3
4720-01-203-7789	12	8		336	27
5305-01-203-8346	317	4		384	12
	321	5	5340-01-204-3904	368	21
	325	8	5305-01-204-4190	275	17
5315-01-203-8543	280	41		276	16
	281	41	5305-01-204-6502	25	5
5340-01-203-8608	225	4		51	6
	226	38		83	6
5340-01-203-8674	274	29		84	1
5340-01-203-8675	272	20		85	25
	280	17		335	6
	281	17	5310-01-204-6745	490	12
5330-01-203-9187	368	1	2520-01-204-7699	97	1
5340-01-203-9391	278	15	9905-01-204-7776	354	9
3130-01-203-9870	136	12	7690-01-204-7785	360	1
2520-01-203-9871	131	4	2590-01-204-7836	272	28

CROSS-REFERENCE INDEXES

NATIONAL STOCK NUMBER INDEX

STOCK NUMBER	FIG.	ITEM
7690-01-204-7847	360	2
7690-01-204-7849	361	7
7690-01-204-7850	361	8
3020-01-204-8132	404	15
	405	1
	472	22
5940-01-204-8830	412	8
5342-01-204-9610	321	26
	325	24
	376	16
2590-01-205-2506	278	13
2510-01-205-2507	278	5
5342-01-205-2519	314	26
5315-01-205-2988	225	36
	226	19
5325-01-205-3203	410	36
	412	12
5340-01-205-5118	209	2
5340-01-205-5377	188	20
5325-01-205-5378	339	5
	410	31
	412	24
5975-01-205-5379	313	7
	333	32
	339	13
	410	28
	412	22
	414	24
	416	27
	485	9
5342-01-205-5381	77	26
2990-01-205-5981	45	2
5305-01-205-6048	167	9
2510-01-205-6089	195	3
5310-01-205-7923	26	5
	97	7
	133	5
	155	18
	251	5
	270	32
	274	11
	275	2
	276	11
2920-01-205-8605	KITS	
5330-01-205-8607	273	21
9905-01-205-8635	354	15
	399	1
2920-01-205-8653	43	38
5340-01-205-9021	316	17
	320	13
5340-01-205-9021	320	25
	324	23
	324	35
	375	24
	378	24
5340-01-205-9022	316	17
	320	13
	320	25
	324	23
	324	35
	375	24
	378	24
5310-01-205-9056	316	13
	320	11
	320	23
	324	18
	324	30
	375	18
	378	21
2530-01-206-3874	KITS	
2520-01-206-3875	128	69
3040-01-206-3876	128	15
2520-01-206-3877	128	9
2540-01-206-4115	317	2
	321	3
3040-01-206-4145	KITS	49
5340-01-206-5040	240	21
	243	22
5340-01-206-5540	75	41
5315-01-206-7135	293	34
5306-01-206-7172	66	8
	77	24
	79	18
5305-01-206-7217	324	21
	324	33
	375	20
5305-01-206-7219	13	8
	14	15
	17	13
	88	35
5310-01-206-7306	12	21
	30	8
	33	11
	36	19
	37	14
	38	19
	41	9
	42	10
	66	7
	75	31

CROSS-REFERENCE INDEXES

NATIONAL STOCK NUMBER INDEX

STOCK NUMBER	FIG.	ITEM	STOCK NUMBER	FIG.	ITEM
5310-01-206-7306	77	9	5340-01-208-7670	325	24
	174	2		376	16
	364	6	5340-01-208-8688	12	32
	379	37	5975-01-208-9618	44	22
	408	11		44	27
	408	25		474	15
	472	2		480	18
	473	10		480	30
	474	4	2510-01-209-0502	202	21
	475	14	4910-01-209-0729	500	6
	476	16	4730-01-209-0845	135	4
	480	8	7690-01-209-0864	356	1
	490	7	2510-01-209-1881	227	12
5365-01-206-7486	72	7	3040-01-209-3376	314	28
5340-01-206-7780	241	1	3040-01-209-3409	314	36
5305-01-206-8401	75	28	2510-01-209-3450	280	40
	77	12		281	40
	84	16	2540-01-209-4590	202	24
	88	12	3020-01-209-4603	314	4
	477	1	3020-01-209-4606	314	5
5340-01-207-0379	199	24	4710-01-209-4628	178	10
5340-01-207-0610	241	2	5340-01-209-4870	280	11
5340-01-207-0717	198	24		281	11
	321	33	5935-01-209-5594	79	3
	325	28	5330-01-209-5997	225	54
	373	10	2590-01-209-6041	226	34
5975-01-207-1706	75	14	2590-01-209-6042	226	35
2590-01-207-3696	173	2	2590-01-209-6043	226	26
2530-01-207-6256	158	2	2540-01-209-6049	271	3
	158	2		271	20
9905-01-207-6304	133	2	4710-01-209-6746	398	14
5306-01-207-7487	374	7	2540-01-209-6838	315	1
6150-01-207-8120	426	16	5340-01-209-6874	315	4
	427	16	2540-01-209-6875	284	16
	428	9		439	9
5307-01-207-9004	31	9	4030-01-209-7047	314	20
5305-01-208-0274	325	10	5340-01-209-7386	411	17
6210-01-208-4790	47	1	5340-01-209-7387	75	34
5310-01-208-5252	374	23		77	15
5325-01-208-5424	410	10	5305-01-209-7667	128	12
	414	8	5305-01-209-7668	128	17
	416	8		130	26
5310-01-208-7576	410	15	5330-01-209-7669	45	3
	414	10	5310-01-209-7702	225	39
	416	13		231	21
	425	11	5365-01-209-7713	128	71
	426	11	5360-01-209-7715	121	13
	427	12	5330-01-209-7723	169	24
	428	13	5331-01-209-7726	131	3
5340-01-208-7670	321	26	5340-01-209-7761	250	3

CROSS-REFERENCE INDEXES

NATIONAL STOCK NUMBER INDEX

STOCK NUMBER	FIG.	ITEM	STOCK NUMBER	FIG.	ITEM
5340-01-209-7767	149	10	5340-01-210-1606	240	17
	183	26	5365-01-210-1628	184	8
	184	12	5365-01-210-1629	203	7
5340-01-209-7794	51	7	5365-01-210-1630	203	27
5340-01-209-7795	159	13	5325-01-210-1633	84	6
5340-01-209-7796	161	1	2990-01-210-2176	398	19
	162	1	5305-01-210-2309	313	19
5340-01-209-7799	85	27		458	42
	88	8	2520-01-210-2624	148	21
5340-01-209-7802	196	9	5340-01-210-2747	5	15
	196	14	2510-01-210-2748	331	15
5340-01-209-7807	153	19	2540-01-210-2749	268	13
5340-01-209-7808	149	13	2540-01-210-2787	208	33
5330-01-209-7817	331	11	5360-01-210-2852	22	3
5340-01-209-7830	121	14	5325-01-210-2870	15	5
5365-01-209-7831	181	5		16	5
	184	9	4820-01-210-3488	15	4
5365-01-209-7832	181	5		16	4
	184	9	4710-01-210-3503	333	7
5340-01-209-7834	203	28	4710-01-210-3504	333	5
5330-01-209-7842	331	16	2520-01-210-3506	99	19
5325-01-209-7843	333	25	2530-01-210-3567	182	9
	372	4	5995-01-210-3594	81	2
2590-01-210-0176	250	2	6150-01-210-3596	327	18
2990-01-210-0427	25	4	2990-01-210-4276	28	1
4720-01-210-0484	7	9	5340-01-210-4751	240	9
4030-01-210-0691	314	16	5365-01-210-4903	44	1
5340-01-210-0692	17	16	5305-01-210-4967	314	25
5310-01-210-0819	39	55	4730-01-210-5785	12	35
5945-01-210-1299	45	20	2910-01-210-5872	18	1
4910-01-210-1318	499	6	2590-01-210-6202	268	30
2530-01-210-1324	144	11	5305-01-210-6248	314	21
	152	11	5305-01-210-6249	321	1
2540-01-210-1325	331	14	5305-01-210-6251	15	33
3020-01-210-1365	314	33	2910-01-210-6856	13	20
3020-01-210-1391	174	11	2510-01-210-6939	28	1
5365-01-210-1584	206	26	2930-01-210-6940	26	3
5310-01-210-1587	8	13	2510-01-210-6941	183	15
	12	19	2510-01-210-6942	184	16
	30	7	3040-01-210-6943	327	1
	36	17	2990-01-210-6982	25	3
	37	13	5310-01-210-7935	224	6
	38	17	5310-01-210-7938	202	40
	41	10	5340-01-210-7966	181	12
	408	37	5120-01-210-8793	499	2
	472	3	5310-01-211-0691	439	10
	473	11	5310-01-211-0698	283	2
	474	3		438	2
	475	16	5330-01-211-0717	314	3
	476	22	5340-01-211-0838	277	29

CROSS-REFERENCE INDEXES

NATIONAL STOCK NUMBER INDEX

STOCK NUMBER	FIG.	ITEM	STOCK NUMBER	FIG.	ITEM
5340-01-211-0838	278	8	2990-01-211-8587	23	16
4730-01-211-0896	18	7		24	20
5330-01-211-1343	156	9	5365-01-212-0144	272	32
5305-01-211-1405	198	13	2590-01-212-1057	268	30
5305-01-211-1439	47	3	5310-01-212-2215	167	6
5305-01-211-1450	13	4	5310-01-212-2303	277	27
	14	4	5365-01-212-2325	202	31
	16	23	5325-01-212-2403	138	6
5305-01-211-1470	208	34		145	6
5340-01-211-1645	280	52	5340-01-212-2407	88	32
4720-01-211-1998	364	4	5930-01-212-3373	67	6
	379	40	4720-01-212-3531	177	9
5342-01-211-2897	7	4	5340-01-212-3553	23	6
5305-01-211-3100	314	14		24	23
5305-01-211-3101	314	1	5340-01-212-3709	28	6
5340-01-211-3132	202	14	5340-01-212-4714	5	14
5340-01-211-3137	23	20	5340-01-212-4716	75	30
	24	17		77	10
5975-01-211-3142	17	11	5365-01-212-4736	202	19
	153	18	5340-01-212-4887	23	9
	379	48		24	6
5360-01-211-3163	314	39	2590-01-212-4955	153	15
2510-01-211-3229	280	33	2590-01-212-4956	333	36
5305-01-211-3786	95	34	2540-01-212-4959	327	2
5310-01-211-3811	24	19	2920-01-212-4976	45	67
	25	6	2540-01-212-5814	202	20
	175	5	2540-01-212-5815	331	27
5340-01-211-4025	23	12	2920-01-212-5816	43	50
2920-01-211-4935	45	79	2920-01-212-5817	43	53
5310-01-211-5037	12	26	2590-01-212-5868	488	1
5365-01-211-5063	62	12	4720-01-212-6403	333	26
5340-01-211-5083	274	31	2520-01-212-6642	109	12
5365-01-211-5094	177	15	4820-01-212-6763	121	10
5342-01-211-5327	45	60	2520-01-212-7634	104	9
4530-01-211-5328	250	4	5340-01-212-7711	182	10
5340-01-211-5593	327	9	4720-01-212-8269	17	15
5330-01-211-5856	47	5	5935-01-212-9631	84	7
5305-01-211-6049	49	3	5330-01-213-1312	BULK	60
5365-01-211-6083	246	25		BULK	87
5340-01-211-6288	272	13		BULK	88
6105-01-211-6635	333	12	5310-01-213-1333	269	21
5355-01-211-6991	314	37	4720-01-213-1574	178	5
	458	6	2590-01-213-1628	283	21
6210-01-211-7024	47	13		438	20
5305-01-211-7415	357	5	2590-01-213-1629	283	15
5340-01-211-7436	203	13		438	14
5305-01-211-7478	170	15	5305-01-213-4149	171	5
	195	4	5310-01-213-4174	314	34
5340-01-211-7562	153	23	5310-01-213-4185	142	20
4140-01-211-8403	32	1		143	27

CROSS-REFERENCE INDEXES

NATIONAL STOCK NUMBER INDEX

STOCK NUMBER	FIG.	ITEM	STOCK NUMBER	FIG.	ITEM
5310-01-213-4185	150	20	2590-01-215-4325	181	6
	151	27	5330-01-215-5124	43	52
5310-01-213-4192	205	15	5305-01-215-5174	3	1
	250	15		75	40
5365-01-213-4239	225	24		77	21
	226	11		479	1
5340-01-213-4267	240	17	5310-01-215-5356	199	31
5340-01-213-4662	80	15		331	18
	203	15		332	25
	204	13		347	7
5340-01-213-4665	83	12	5340-01-215-5478	333	30
	88	34	4010-01-215-7466	284	3
5340-01-213-4667	75	48		439	3
	77	25	5340-01-215-9170	141	12
5305-01-213-5024	332	17	5985-01-215-9404	410	6
5315-01-213-5545	202	23		414	5
5340-01-213-5600	153	9		428	5
5340-01-213-5735	202	2	5330-01-216-0288	314	11
	218	7	5365-01-216-0364	277	30
	253	35		278	7
5365-01-213-5739	398	20	5365-01-216-1166	314	10
2540-01-213-8057	283	1	6220-01-216-5285	64	5
	438	1	2540-01-216-6320	226	35
5365-01-214-0006	246	30	5310-01-216-7390	44	5
2590-01-214-1566	315	7		209	14
2540-01-214-1568	327	6		457	11
5340-01-214-1778	247	25	5331-01-216-7392	488	3
5340-01-214-2089	181	1	5331-01-216-7393	488	4
2520-01-214-2565	169	17	6695-01-216-8687	64	9
5340-01-214-3615	333	6	5935-01-216-8763	76	9
5360-01-214-3695	153	14	6220-01-216-9337	64	6
5340-01-214-3712	83	7	5310-01-217-0715	279	34
5940-01-214-4563	79	10	5340-01-217-2576	286	27
5340-01-214-4675	283	9	2590-01-217-2662	64	24
	438	9		81	14
5310-01-214-4955	45	50	2510-01-217-2663	286	33
5365-01-214-4987	196	11	2510-01-217-2664	286	33
5340-01-214-4992	271	6	2590-01-217-2665	286	24
	271	23	2540-01-217-2666	286	21
	296	6	5340-01-217-2667	286	27
5325-01-214-5007	327	21	2540-01-217-2669	21	20
4720-01-214-5757	12	39	5970-01-217-4566	43	41
5310-01-214-7784	45	44	5310-01-217-5205	203	30
5310-01-214-7785	43	30		486	2
5970-01-214-7806	43	42	2590-01-217-5743	286	1
5342-01-214-7809	284	15	4010-01-217-7086	284	3
	439	8		439	3
5325-01-214-7817	80	11	5320-01-218-0721	31	6
5305-01-215-3985	43	32	5315-01-218-1114	245	40
5305-01-215-3990	83	13	5330-01-218-1196	64	7

CROSS-REFERENCE INDEXES

NATIONAL STOCK NUMBER INDEX

STOCK NUMBER	FIG.	ITEM	STOCK NUMBER	FIG.	ITEM
5305-01-218-1243	64	10	2815-01-231-3672	1	1
5360-01-218-1608	286	3	8145-01-231-3747	363	1
5910-01-218-1675	43	46	4010-01-231-5075	314	17
5310-01-218-3190	202	9	5310-01-231-7455	398	6
	252	29	5310-01-232-1361	40	30
2910-01-218-4489	KITS		5310-01-232-1362	40	40
4010-01-218-4639	284	7	5310-01-232-1363	407	9
4010-01-218-4640	284	9	5310-01-232-6617	407	8
5320-01-218-5802	286	31	2590-01-232-8210	286	42
5310-01-218-7137	457	10	3020-01-232-9629	37	20
5340-01-218-7739	268	33		408	21
2930-01-218-8103	26	3		475	28
5120-01-218-8235	502	5	2510-01-233-1141	225	12
5365-01-218-9848	285	12	5340-01-233-1461	240	14
5365-01-218-9914	285	8	4730-01-233-4987	384	15
	285	11	2510-01-233-7767	226	4
5365-01-219-3528	191	3	5310-01-234-9415	88	16
5320-01-219-7261	286	6	5310-01-234-9416	35	14
5340-01-219-7541	64	3		37	7
5320-01-220-0596	208	10		52	11
	220	1		56	8
	230	24		59	16
	231	29		234	16
5340-01-220-3084	205	10		246	32
5310-01-220-3099	286	11		247	23
5320-01-221-4231	274	30		249	44
5305-01-221-7734	286	2		260	7
5820-01-222-1106	416	KITS		269	3
5820-01-222-1107	414	KITS		284	14
2920-01-222-2183	KITS	40		298	8
2540-01-223-3749	240	8		307	12
5306-01-223-4345	40	39		321	16
5320-01-223-7728	298	7		327	38
5935-01-223-9420	74	7		327	44
5305-01-224-1449	286	5	2590-01-235-8661	243	5
9905-01-224-5860	354	8		244	2
5310-01-225-0701	40	3		244	14
5365-01-225-0844	40	35	2530-01-235-8688	167	12
5120-01-227-3159	505	3		167	12
5310-01-228-3299	286	22	5340-01-236-2112	268	38
5120-01-229-0842	503	3	5305-01-236-4349	123	2
5340-01-229-3632	5	5		124	14
5305-01-229-7855	327	3		125	14
5306-01-230-3354	4	21	5340-01-236-5101	345	32
5310-01-231-0596	142	6	2510-01-236-6488	278	4
	143	6	2540-01-236-6489	278	4
	150	6	5930-01-237-7322	66	1
	151	6	5970-01-238-0146	43	28
5120-01-231-1709	504	1	5935-01-238-0543	84	13
4910-01-231-3671	499	7		86	21

CROSS-REFERENCE INDEXES

NATIONAL STOCK NUMBER INDEX

STOCK NUMBER	FIG.	ITEM	STOCK NUMBER	FIG.	ITEM
4910-01-238-2551	505	14	2510-01-247-7968	226	4
5330-01-238-3217	275	24	5330-01-247-8438	34	7
5340-01-238-9543	398	5	9905-01-248-1111	355	4
4730-01-239-5251	303	12	9905-01-248-1112	355	4
5340-01-242-6245	235	14	9905-01-248-1113	355	4
5305-01-243-3759	476	17	9905-01-248-1114	355	4
5306-01-243-4650	175	2	9905-01-248-1115	355	4
3040-01-244-3646	488	18	2510-01-248-1340	208	19
5340-01-244-5765	15	15	2920-01-248-2509	43	5
	16	14	2590-01-248-2531	251	12
	180	2	5340-01-248-2878	59	15
2520-01-244-9863	100	1	2530-01-248-4873	184	18
5342-01-246-1120	17	1	2590-01-248-4874	251	11
5330-01-246-1822	12	14	7690-01-248-4907	430	28
	364	2	7690-01-248-4908	430	43
5365-01-246-8281	205	18	7690-01-248-4909	430	45
5340-01-246-8282	197	31	9530-01-248-7621	243	31
2540-01-246-8283	242	1		244	15
2540-01-246-8284	243	4	2590-01-248-7622	251	33
2540-01-246-8285	244	1	2590-01-248-7623	251	34
2540-01-246-8286	244	4	5340-01-248-7646	199	43
2510-01-246-8287	209		5340-01-248-7649	430	36
2590-01-246-8288	226	3	9905-01-248-7656	370	13
2540-01-246-8289	226	1	9905-01-248-7657	354	7
5340-01-246-8290	246	34	7690-01-248-7679	429	28
2590-01-246-8291	249	13	7690-01-248-7680	429	33
2540-01-246-8292	251	22	7690-01-248-7681	429	39
	254	3	7690-01-248-7682	430	24
5340-01-246-8293	251	37	7690-01-248-7683	430	46
2590-01-246-8294	252	36	2510-01-248-8875	47	6
	253	3	2590-01-248-9531	286	40
	255	3	2590-01-248-9536	286	40
5355-01-247-3593	14	10	9905-01-248-9543	355	4
	331	28	9905-01-248-9544	355	4
5120-01-247-6629	501	7	9905-01-248-9545	355	4
4730-01-247-6763	150	5	9905-01-248-9546	355	4
2590-01-247-7910	199	7	9905-01-248-9547	355	4
5340-01-247-7911	242	9	9905-01-248-9548	355	4
5340-01-247-7912	226	10	9905-01-248-9549	355	4
2540-01-247-7914	208	38	9905-01-248-9550	356	2
2540-01-247-7915	208	38	9905-01-248-9551	356	6
1005-01-247-7916	251	6	9905-01-248-9552	355	4
1010-01-247-7917	251	8	2510-01-248-9557	268	3
5340-01-247-7918	252	25	5315-01-249-0555	437	2
5340-01-247-7919	252	30	5310-01-249-0899	398	1
2590-01-247-7920	255	34	5310-01-249-0904	461	5
5340-01-247-7921	251	13	2520-01-249-1434	97	8
5340-01-247-7922	252	15		101	10
2590-01-247-7923	255	8	3040-01-249-1435	99	9
2590-01-247-7924	255	22	2520-01-249-1506	137	18

CROSS-REFERENCE INDEXES

NATIONAL STOCK NUMBER INDEX

STOCK NUMBER	FIG.	ITEM	STOCK NUMBER	FIG.	ITEM
5340-01-249-1575	179	16	5310-01-250-7835	26	10
5340-01-249-1576	179	5	5310-01-250-7836	99	17
2530-01-249-1577	170	2		202	36
2590-01-249-1578	244	12		203	19
2590-01-249-1579	255	13	5310-01-251-0711	49	10
2510-01-249-1580	268	20		333	2
2510-01-249-1581	268	21	5340-01-251-0724	28	3
2510-01-249-1582	268	21	5310-01-251-0725	408	10
2510-01-249-1583	268	22		408	26
2540-01-249-1584	279	1	5310-01-251-0726	52	12
2510-01-249-1585	272	1		56	15
2510-01-249-1586	272	1		58	12
5340-01-249-1587	275	25		59	8
2590-01-249-1588	286	19		83	8
2540-01-249-1589	413	7		258	2
5340-01-249-1590	415	7		259	7
9515-01-249-1591	429	7		262	12
2540-01-249-1592	429	8		263	8
2540-01-249-1593	429	19		289	14
5340-01-249-1594	429	21		326	7
2540-01-249-1595	429	30		338	7
2590-01-249-1596	430	1		410	11
2540-01-249-1597	430	4		412	20
2540-01-249-1598	430	30		426	19
2510-01-249-1599	179	2		427	19
2510-01-249-1600	179	15		428	11
9905-01-249-1612	354	19	5305-01-251-0728	249	23
2920-01-249-3492	99	20		253	25
5342-01-249-3502	208	32		256	6
5342-01-249-5389	208	32		257	9
5342-01-250-1098	10	14		259	10
7690-01-250-1101	430	47		262	3
5305-01-250-6582	57	8		263	6
5305-01-250-6583	46	22		264	2
5305-01-250-6584	55	4		264	2
	56	2		265	2
5310-01-250-6587	59	10	3120-01-251-0735	133	13
	99	12	5310-01-251-0747	42	3
5305-01-250-6588	133	3	5310-01-251-0748	58	8
2540-01-250-7589	429	1		99	8
2540-01-250-7590	415	9		208	15
2540-01-250-7591	430	KITS		252	2
2540-01-250-7592	430	31		252	2
2510-01-250-7593	227	26		334	4
2510-01-250-7594	227	26		338	20
2510-01-250-7595	227	25		339	15
2510-01-250-7596	227	2		417	2
2510-01-250-7597	227	1		418	2
5310-01-250-7679	4	20		419	2
2510-01-250-7786	268	3		420	7

CROSS-REFERENCE INDEXES

NATIONAL STOCK NUMBER INDEX

STOCK NUMBER	FIG.	ITEM	STOCK NUMBER	FIG.	ITEM
5310-01-251-0748	421	4	5310-01-252-0481	253	32
	422	6		253	39
	423	10		255	4
	425	2		255	12
	426	4		255	14
	427	3		255	25
5340-01-251-0754	84	20		255	29
5305-01-251-0756	26	7	5310-01-252-0512	328	9
5310-01-251-0760	62	13	5310-01-252-0513	241	6
5330-01-251-1607	100	10		249	25
	108	7		272	17
5306-01-251-1616	142	27	5340-01-252-0741	245	34
2590-01-251-3068	227	20	9330-01-252-1239	BULK	78
2590-01-251-3069	227	7	5310-01-252-2999	59	7
	227	17		75	32
2590-01-251-3070	227	17		84	10
2590-01-251-3071	227	6		153	6
4710-01-251-3073	227	5		330	1
4710-01-251-3075	227	22	2540-01-252-3386	270	33
4710-01-251-3076	268	27	2510-01-252-4466	227	10
2510-01-251-5316	193	4	2510-01-252-4756	243	21
2920-01-251-5488	406	14	5330-01-252-5377	197	32
4710-01-251-6103	227	4	5330-01-252-5378	199	60
5995-01-251-6785	428	2	4820-01-252-6169	504	4
2510-01-251-8548	227	19	2510-01-252-6240	277	3
5306-01-251-9190	75	47	1005-01-252-6299	251	3
	174	4	1010-01-252-6300	251	9
5305-01-251-9222	103	11	5355-01-252-6504	280	38
	104	17		281	38
5995-01-251-9316	414	1	5310-01-252-7285	196	6
	416	2	2510-01-252-7903	284	8
3040-01-251-9383	230	10	2510-01-252-7904	284	10
2510-01-251-9995	227	21	5365-01-252-8026	208	30
5310-01-252-0481	63	5	2530-01-252-8362	170	7
	246	9	2540-01-252-8460	270	33
	246	14	2510-01-252-8461	284	6
	247	13	5340-01-252-8537	208	24
	247	24	5305-01-252-9108	199	36
	248	9	5365-01-252-9214	205	11
	249	6	5310-01-253-0058	199	58
	249	21	5310-01-253-0060	205	8
	249	33		206	28
	251	15	5306-01-253-1611	150	36
	251	25	5306-01-253-1612	202	34
	251	39	5310-01-253-1615	338	27
	252	17		410	16
	252	39	5310-01-253-1618	208	27
	253	5		252	5
	253	12		252	5
	253	15		260	11

CROSS-REFERENCE INDEXES

NATIONAL STOCK NUMBER INDEX

STOCK NUMBER	FIG.	ITEM	STOCK NUMBER	FIG.	ITEM
5310-01-253-1618	273	13	5310-01-253-8948	180	5
	275	12		181	2
	276	8		182	3
	300	13		187	12
	327	31		188	2
4720-01-253-2809	504	3		191	2
4720-01-253-2810	504	5		194	1
2530-01-253-2825	157	16		283	3
	158	11		417	15
2510-01-253-2839	272	10	5310-01-253-8949	248	15
5305-01-253-2989	240	10		280	4
5305-01-253-2993	205	33		280	53
	206	20		281	4
5305-01-253-2998	241	11		281	53
5985-01-253-3514	414	4		286	18
	425	13	5310-01-253-8951	85	5
5340-01-253-3757	197	23		88	3
	199	40		272	5
2590-01-253-3905	235	5	5310-01-253-8952	280	12
2510-01-253-3907	280	1		280	37
5306-01-253-4426	179	8		281	12
5970-01-253-5134	406	32		281	37
5340-01-253-5479	246	19	5310-01-253-8953	280	19
	253	34		280	35
	254	25		281	19
	255	27		281	35
2540-01-253-6112	349	16		335	12
5310-01-253-6439	203	14		336	9
6680-01-253-6782	504	9	5310-01-253-8957	226	22
5306-01-253-7073	4	19	5340-01-253-8971	280	2
5340-01-253-8377	272	12		281	2
5310-01-253-8380	89	11	5365-01-253-8975	272	11
	214	9	5365-01-253-8980	280	51
	307	6		281	51
	308	15	2510-01-254-1056	272	16
	339	29	2510-01-254-1482	280	1
	414	22	2510-01-254-1483	281	1
	428	24	2510-01-254-1484	208	18
5310-01-253-8437	127	9	5360-01-254-1492	192	1
	230	13	5342-01-254-1498	366	1
	234	11	2510-01-254-1500	280	1
	235	12	2510-01-254-1501	281	1
	239	12	5320-01-254-2283	208	37
5310-01-253-8438	286	28		332	40
5310-01-253-8440	410	34	5306-01-254-2357	174	10
	412	25	5306-01-254-2358	148	3
5310-01-253-8928	284	17	5306-01-254-2359	177	16
	331	23	5306-01-254-2360	279	37
5340-01-253-8933	277	14	5305-01-254-2451	249	40
5310-01-253-8948	179	4	5305-01-254-2452	248	2

CROSS-REFERENCE INDEXES

NATIONAL STOCK NUMBER INDEX

STOCK NUMBER	FIG.	ITEM	STOCK NUMBER	FIG.	ITEM
5305-01-254-2452	272	22	5305-01-255-1016	249	8
5305-01-254-2453	269	26		249	32
5305-01-254-2459	268	1	5305-01-255-1017	249	19
	270	40	5340-01-255-1109	413	9
5305-01-254-2460	92	17		421	10
	199	25		422	10
	497	1	5325-01-255-1126	235	6
5305-01-254-2461	398	13	5340-01-255-1657	203	24
5307-01-254-2504	278	11	5306-01-255-2661	193	7
5305-01-254-2511	406	29	5306-01-255-2662	415	6
5305-01-254-2521	174	9	5305-01-255-2670	243	1
5305-01-254-2522	230	12	5305-01-255-2675	246	27
	238	1		216C	15
5320-01-254-4251	197	6	5310-01-255-2695	58	10
	230	21		237	6
	231	26		248	14
	235	17		249	12
	337	24		249	34
	417	9		252	9
5310-01-254-4258	269	29	5310-01-255-2704	164	2
5310-01-254-4284	280	3	5340-01-255-2729	429	23
	281	3	5315-01-255-2763	243	34
5365-01-254-4394	277	13	5315-01-255-2764	243	26
5310-01-254-5352	46	20	5360-01-255-2808	243	33
	208	3	5340-01-255-2812	430	9
4730-01-254-6023	504	6	3020-01-255-2906	504	7
5306-01-254-6356	171	4	2590-01-255-2957	251	36
2540-01-254-6511	370	9	2590-01-255-2958	251	48
5340-01-254-6543	140	3	5305-01-255-3588	331	8
5340-01-254-7189	316	19		332	43
	320	16	5365-01-255-3610	285	15
	320	30	4030-01-255-3634	284	11
	324	20	5305-01-255-4606	222	9
	324	32		347	2
	378	26	5305-01-255-4611	327	22
5340-01-254-7190	251	14	5365-01-255-4633	277	5
5340-01-254-7191	253	37	5365-01-255-4634	277	5
	429	29	5340-01-255-4655	208	26
	430	19	5305-01-255-4950	274	22
4710-01-254-7272	227	13	5365-01-255-4990	277	5
5305-01-255-0094	185	2	5365-01-255-4991	277	5
5330-01-255-0207	202	5	5325-01-255-5062	414	21
5330-01-255-0208	202	11	5325-01-255-5063	416	24
4730-01-255-0925	331	32		428	23
5365-01-255-0965	153	26	5320-01-255-6608	202	4
	154	8	5340-01-255-9380	240	3
	379	36	5310-01-255-9452	413	10
5305-01-255-1016	247	21	5340-01-255-9510	198	9
	247	26		321	14
	248	23		323	12

CROSS-REFERENCE INDEXES

NATIONAL STOCK NUMBER INDEX

STOCK NUMBER	FIG.	ITEM	STOCK NUMBER	FIG.	ITEM
5340-01-255-9510	325	16	5340-01-257-0908	429	20
5340-01-255-9514	415	8	2510-01-257-1572	277	17
5340-01-255-9515	430	2		277	45
5360-01-255-9899	205	30	5340-01-257-2644	430	10
5340-01-255-9918	280	2	4710-01-257-2649	364	5
	281	2		379	42
5340-01-255-9919	316	20	4720-01-257-2655	364	9
	320	17		379	43
	320	32	4730-01-257-3348	148	23
	324	17	4720-01-257-3705	5	11
	324	29	2540-01-257-3742	370	1
5305-01-256-0405	244	20	2510-01-257-3747	274	2
5305-01-256-0406	215	6		276	28
	430	26	5340-01-257-3778	430	25
5310-01-256-0416	328	16	2530-01-257-3864	140	6
4030-01-256-0471	314	19	2510-01-257-3876	281	1
	458	40	2540-01-257-3877	188	3
5340-01-256-0942	430	11	6220-01-257-3878	83	32
6685-01-256-3406	504	8	2510-01-257-3903	280	1
3030-01-256-3616	32	2	2510-01-257-3904	281	1
	408	1	2530-01-257-3905	152	20
2590-01-256-3628	429	25	4730-01-257-4905	12	30
5310-01-256-4491	243	12	5342-01-257-7706	35	19
	244	6	5310-01-257-7719	169	32
5340-01-256-4515	243	30		205	7
5340-01-256-4516	244	3		206	27
5340-01-256-4517	251	27	2590-01-257-8787	369	13
	252	27	5310-01-258-1536	26	4
	252	27		174	12
	253	22		398	26
	255	21	5340-01-258-1547	279	36
5365-01-256-4526	246	28	5320-01-258-2576	208	12
5340-01-256-4655	254	15	5340-01-258-4529	251	23
5340-01-256-4656	272	18		251	38
5340-01-256-4657	246	36		253	19
5340-01-256-4659	243	3		254	6
7690-01-256-4908	354	21		255	18
7690-01-256-4909	354	22	5330-01-258-4664	272	6
2530-01-256-4914	152	20	5340-01-258-4866	252	23
2930-01-256-5350	27	3	5340-01-258-6157	246	12
5305-01-256-6870	429	13		251	18
	430	27		251	32
	430	34		253	23
5340-01-256-9318	316	20		255	32
	320	17	5340-01-258-6158	252	40
	320	32		253	4
	324	17		255	7
	324	29		255	10
5365-01-256-9568	245	29		260	23
5325-01-257-0801	268	23	5340-01-258-8609	252	31

CROSS-REFERENCE INDEXES

NATIONAL STOCK NUMBER INDEX

STOCK NUMBER	FIG.	ITEM	STOCK NUMBER	FIG.	ITEM
2590-01-258-9491	272	7	5360-01-260-0700	153	24
5340-01-259-0327	251	49		154	9
5340-01-259-0328	252	21	5310-01-260-4839	165	2
	252	35		181	11
5340-01-259-0329	253	9		182	1
	253	17		184	14
	255	16		195	1
5340-01-259-0330	254	9		270	34
	255	26	5340-01-260-4881	268	24
4140-01-259-2175	368	6	5961-01-260-5135	406	25
5340-01-259-3956	246	37	5310-01-260-5784	208	17
4210-01-259-5634	241	9	5340-01-260-5792	266	3
	241	14	5342-01-260-7853	430	29
5320-01-259-6155	224	1	6150-01-260-8000	366	29
	237	16	5305-01-260-8881	426	14
	263	5		427	13
5305-01-259-6322	58	2	5340-01-260-9026	429	24
	59	26	5340-01-260-9027	207	9
	79	16		318	8
	83	17		325	21
	88	5	5970-01-260-9132	39	75
	88	26	5340-01-260-9874	266	3
	227	3	5340-01-260-9940	286	13
	227	3	5340-01-260-9942	217	2
	286	41	2590-01-261-0523	279	22
	303	14	5340-01-261-1564	251	41
	310	5	2590-01-261-2636	202	6
	332	29	2590-01-261-2637	202	12
	335	3	2590-01-261-5484	202	13
	338	17	2590-01-261-5485	230	22
	339	10		231	27
	368	7	6670-01-261-6844	167	12
	412	17	6670-01-261-6845	167	12
	424	5	6670-01-261-6846	167	12
	425	19	6670-01-261-6847	167	12
	426	24	2590-01-261-6851	227	24
	427	24		369	12
	468	10	6670-01-261-8011	167	12
5320-01-259-7423	226	2	6670-01-261-8012	167	12
	237	5	6670-01-261-8013	167	12
5340-01-259-7523	247	16	2590-01-262-4980	279	4
5310-01-259-7554	328	11	2590-01-262-4981	279	7
5340-01-259-7601	269	5	2510-01-262-6007	198	12
5340-01-259-8579	266	17	2510-01-262-6008	200	5
5340-01-259-8600	269	24	2510-01-262-6009	200	6
2590-01-260-0214	279	6	2510-01-262-6010	198	11
5342-01-260-0215	279	10	2510-01-262-6011	198	26
2590-01-260-0216	279	15	2590-01-262-7706	227	29
2590-01-260-0217	279	20	2590-01-262-7707	227	11
5340-01-260-0218	279	21	6670-01-262-8646	167	12

CROSS-REFERENCE INDEXES

NATIONAL STOCK NUMBER INDEX

STOCK NUMBER	FIG.	ITEM	STOCK NUMBER	FIG.	ITEM
6670-01-262-8647	167	12	5320-01-264-5978	297	2
2590-01-262-9513	253	28		297	2
2590-01-262-9514	253	8		300	5
2590-01-262-9515	253	14		307	7
2540-01-262-9516	253	33		308	13
	254	28		342	8
2510-01-262-9520	268	3	5340-01-264-6104	197	5
6670-01-263-2268	167	12	5340-01-264-6108	430	14
2590-01-263-3254	227	29	2590-01-264-6531	251	29
	368	33	5342-01-264-6532	211	2
5306-01-263-6142	279	32	5342-01-264-6533	212	2
5306-01-263-8889	35	20	7690-01-264-6536	358	4
	36	12	5330-01-264-6537	363	5
	37	17	5340-01-264-6540	363	8
	38	12	5340-01-264-6541	363	25
	408	35	5342-01-264-6543	363	22
	472	14	5340-01-264-6544	363	6
	475	21	2510-01-264-6546	211	13
	476	19		212	14
6160-01-263-9784	230	25	3040-01-264-9554	279	8
5305-01-264-0923	245	9	2510-01-265-1126	213	21
5325-01-264-1522	207	3	5342-01-265-1129	293	27
5306-01-264-3531	174	1	2510-01-265-1130	214	28
	408	36	9905-01-265-1131	59	22
	472	16	9905-01-265-1132	59	22
	475	24	7690-01-265-1133	362	3
	476	20	7690-01-265-1134	362	4
5305-01-264-3555	230	14	7690-01-265-1135	362	5
5305-01-264-3602	183	1	2540-01-265-1137	224	11
	185	11	2510-01-265-1138	211	1
	187	15	2510-01-265-1139	211	1
	188	11	2510-01-265-1140	212	1
5365-01-264-4023	196	13	2510-01-265-1141	212	1
5305-01-264-5809	155	10	2530-01-265-3148	157	4
	226	33	4820-01-265-3149	494	7
	227	36		496	31
5340-01-264-5833	234	13	4140-01-265-3151	342	1
	252	16	4710-01-265-3152	496	17
	253	38	2530-01-265-3153	157	4
5305-01-264-5864	46	7	2510-01-265-3155	293	17
5305-01-264-5874	199	50	4820-01-265-3156	492	10
	343	19	2510-01-265-3157	293	17
	495	9	4820-01-265-3159	492	12
5320-01-264-5978	199	14	2540-01-265-3160	292	7
	217	3	4730-01-265-3166	301	6
	219	6		302	10
	245	35		303	1
	264	1		304	1
	265	1		305	3
	295	9		306	1

CROSS-REFERENCE INDEXES

NATIONAL STOCK NUMBER INDEX

STOCK NUMBER	FIG.	ITEM	STOCK NUMBER	FIG.	ITEM
4730-01-265-3166	309	2	5306-01-265-8767	262	5
	310	2	5315-01-265-8771	39	23
3030-01-265-3171	490	11	5360-01-265-8798	157	3
2590-01-265-3185	155	3	5360-01-265-8799	157	3
2510-01-265-3194	293	22	5330-01-265-8803	293	1
4720-01-265-3213	336	2	5330-01-265-8804	214	1
4720-01-265-3222	301	2	5330-01-265-8805	214	25
4720-01-265-3223	492	5	5330-01-265-8806	223	3
4720-01-265-3224	492	13	5330-01-265-8807	223	1
4710-01-265-3228	335	2	5330-01-265-8808	213	32
	335	8	5331-01-265-8809	492	11
	336	5	5340-01-265-8858	289	23
4710-01-265-3229	335	7	5340-01-265-8859	292	12
	336	4	5340-01-265-8883	157	2
4710-01-265-3230	493	8	5340-01-265-8895	262	6
4710-01-265-3231	334	8	5306-01-265-8897	287	31
4710-01-265-3232	492	2		294	7
4710-01-265-3233	492	1	5340-01-265-8905	283	20
2540-01-265-3234	54	1		438	19
4720-01-265-3237	301	1	5340-01-265-8911	211	25
4720-01-265-3238	343	12		212	28
4720-01-265-3239	302	13		213	27
	305	2		214	22
2540-01-265-3266	343	21	5340-01-265-8921	262	8
4710-01-265-3275	334	10	5340-01-265-8922	238	2
4710-01-265-3276	493	4	5340-01-265-8923	258	7
4710-01-265-3277	493	2		259	3
2510-01-265-3281	297	3		260	3
	297	10		262	11
2510-01-265-3282	291	7		287	27
	291	7	5340-01-265-8924	216	6
	297	10	5340-01-265-8925	256	5
2510-01-265-3283	297	9		257	10
4730-01-265-3284	302	5		289	1
	305	7	5365-01-265-8937	283	16
4730-01-265-3285	304	3		438	15
	306	5	5365-01-265-8938	283	16
	309	6		438	15
2990-01-265-3297	346	2	5365-01-265-8939	283	16
2990-01-265-3298	347	1		438	15
5342-01-265-3672	212	2	5330-01-265-8946	223	3
5340-01-265-3674	363	26	5330-01-265-8947	223	1
5340-01-265-3676	363	18	5330-01-265-8948	213	1
5120-01-265-4872	501	6	5310-01-265-8968	245	27
2510-01-265-6953	214	16	5360-01-265-9116	156	4
6105-01-265-8634	494	19	5330-01-265-9231	293	33
	498	14	6220-01-266-1651	65	24
4130-01-265-8691	344	1		65	24
6680-01-265-8698	496	19	5930-01-266-1809	494	8
4130-01-265-8726	496	1	5945-01-266-1810	59	5

CROSS-REFERENCE INDEXES

NATIONAL STOCK NUMBER INDEX

STOCK NUMBER	FIG.	ITEM	STOCK NUMBER	FIG.	ITEM
5930-01-266-1811	58	14	6150-01-269-1840	90	1
3040-01-266-2122	109	17	6150-01-269-1848	338	6
5340-01-266-2995	202	7		339	7
4010-01-266-3842	292	18	6150-01-269-1849	338	1
5340-01-266-3843	346	4	6150-01-269-1854	39	65
5340-01-266-3844	287	18	6150-01-269-1855	39	38
5340-01-266-3845	293	14	6150-01-269-1856	39	40
5340-01-266-3846	287	9	6150-01-269-1857	39	46
5920-01-266-3908	39	62	6150-01-269-1858	39	64
9905-01-266-3913	362	2	6150-01-269-1859	56	5
5930-01-266-3917	496	30	6150-01-269-1861	56	19
5930-01-266-3919	58	4	6150-01-269-1862	56	20
5961-01-266-3984	59	6	6150-01-269-1863	39	51
2510-01-266-4003	215	3	6150-01-269-1897	93	1
5930-01-266-4592	55	11	5306-01-269-4319	121	21
	56	17	4130-01-269-4921	496	27
5945-01-266-4593	52	18	6220-01-269-5263	65	3
	56	9	6150-01-269-5275	91	1
5342-01-266-5689	211	2	6150-01-269-5298	95	1
2510-01-266-5690	218	3	6150-01-269-5299	94	1
5342-01-266-5691	217	1	6150-01-269-5300	92	1
2540-01-266-5702	229	3	5935-01-269-5994	52	4
7690-01-266-5706	59	20		57	3
5340-01-266-5708	224	14	5306-01-269-6254	279	9
2510-01-266-5711	216	10	2990-01-269-6625	337	1
5310-01-266-6392	488	17	6220-01-269-7066	65	12
5340-01-266-6398	227	15	6220-01-269-7067	55	8
5342-01-266-7559	289	8		56	10
2510-01-266-8013	277	18	4140-01-269-7101	494	18
	277	44	9330-01-269-7114	287	17
5306-01-266-8274	202	28	6115-01-269-7911	39	21
5325-01-266-8414	207	2	6230-01-269-8054	65	22
	208	20		289	28
5340-01-266-9173	313	3	5985-01-269-8271	341	2
	457	21	5985-01-269-8272	340	6
5325-01-267-1107	488	22	5985-01-269-8274	341	4
5180-01-267-2907	509	1	5970-01-269-8384	39	14
5365-01-267-6769	279	13	5940-01-269-8396	95	19
2520-01-267-7371	148	11	5315-01-269-8504	213	17
5315-01-267-7570	403	8		214	13
5342-01-268-0921	275	23	5365-01-269-8671	211	8
2520-01-268-1051	363	2		212	5
5305-01-268-5680	333	40	5365-01-269-8672	211	29
2540-01-268-7203	299	3		212	31
6150-01-269-0067	89	1	5935-01-269-8992	52	19
5310-01-269-0786	26	8		56	6
4030-01-269-1263	284	11	5995-01-269-9525	338	14
5940-01-269-1816	89	4		339	11
6150-01-269-1839	339	21	4730-01-269-9530	336	1
6150-01-269-1840	58	13	5920-01-270-0090	52	10

CROSS-REFERENCE INDEXES

NATIONAL STOCK NUMBER INDEX

STOCK NUMBER	FIG.	ITEM	STOCK NUMBER	FIG.	ITEM
5920-01-270-0090	59	13	2540-01-270-6539	236	5
5905-01-270-0966	342	3	2540-01-270-6540	237	2
5330-01-270-1353	274	7	2540-01-270-6541	237	2
	276	26	5305-01-270-7225	227	23
6220-01-270-1454	64	19		228	2
5970-01-270-1465	39	27		228	2
5977-01-270-1466	39	66		228	2
5970-01-270-1467	39	60		484	17
5977-01-270-1468	39	72	5306-01-270-7332	331	4
2540-01-270-2250	213	5		332	1
	214	33	3040-01-270-7917	238	10
3120-01-270-2645	39	18	2510-01-270-7919	347	5
3120-01-270-2646	496	4	5342-01-270-7921	307	13
5310-01-270-2661	494	2		308	1
	495	13	2510-01-270-7922	222	23
	496	8	2510-01-270-7925	296	10
5340-01-270-2681	55	9	4730-01-270-7931	301	8
5330-01-270-3668	39	26	3040-01-270-7961	238	15
5940-01-270-3700	92	2	5330-01-270-8315	340	4
	93	6		341	3
	95	7		426	15
	96	11		427	15
5940-01-270-3701	93	4	5330-01-270-8316	39	67
5940-01-270-3702	95	15	5330-01-270-8317	343	7
	96	4	5340-01-270-8370	211	18
2540-01-270-3776	337	21		212	15
2540-01-270-4353	298	6	5310-01-270-8377	39	13
5340-01-270-4415	298	1	5310-01-270-8415	39	22
	346	7	5340-01-270-8431	212	25
5975-01-270-4587	58	3		258	10
2540-01-270-5065	238	5		259	13
4520-01-270-5080	298	4		260	24
5310-01-270-5394	343	22	5340-01-270-8432	212	22
5305-01-270-5418	211	21		258	8
	212	19		260	18
5305-01-270-5419	342	2	5340-01-270-8433	211	20
	496	26		212	18
	498	7	5340-01-270-8435	213	28
5305-01-270-5435	335	10		214	18
	336	7	5340-01-270-8455	264	7
5306-01-270-5448	35	21		265	6
	36	13	5340-01-270-8483	213	12
	38	13		214	6
2540-01-270-6458	290	4	5340-01-270-8484	39	49
2540-01-270-6459	219	5	5340-01-270-8489	338	23
	290	7		339	18
2540-01-270-6460	290	9		486	10
2510-01-270-6487	296	21	5340-01-270-8490	338	25
2540-01-270-6537	236	3	5975-01-270-8546	59	2
2540-01-270-6538	236	4	5975-01-270-8552	294	1

CROSS-REFERENCE INDEXES

NATIONAL STOCK NUMBER INDEX

STOCK NUMBER	FIG.	ITEM	STOCK NUMBER	FIG.	ITEM
2540-01-270-9344	229	1	5320-01-271-6357	71	9
2590-01-270-9446	295	5		199	12
2510-01-270-9447	295	4		211	10
3040-01-270-9466	37	6		213	2
4710-01-270-9507	288	8		214	23
4720-01-270-9616	303	7		215	1
4720-01-270-9618	310	8		216	11
4730-01-270-9652	311	11		217	7
	312	7		220	3
2510-01-270-9707	300	1		245	36
2540-01-270-9711	238	4		261	8
5305-01-271-1806	191	11		289	22
5320-01-271-1834	211	6		291	1
	212	3		291	1
	346	8		293	3
5310-01-271-1841	39	61		295	1
5340-01-271-1846	211	22		296	14
	212	20		297	1
2540-01-271-1946	288	27		297	1
2540-01-271-1954	311	6		298	3
2540-01-271-1955	311	18		299	4
2540-01-271-1991	293	20		300	7
5365-01-271-2491	266	26		307	8
	439	4		308	10
4010-01-271-2598	279	16		334	2
2540-01-271-2832	290	2		343	1
2540-01-271-2839	347	9		347	10
2540-01-271-2840	289	3		365	14
2540-01-271-2841	289	3		369	7
4520-01-271-2949	300	11	5340-01-271-6361	215	5
5340-01-271-3059	363	7	3120-01-271-6432	39	59
2540-01-271-3769	300	9	5340-01-271-6455	494	20
2590-01-271-3770	289	26	5340-01-271-6461	296	11
2540-01-271-3771	289	12	3130-01-271-6464	39	3
2540-01-271-3772	288	5	5340-01-271-6465	494	14
2540-01-271-3773	288	28	5340-01-271-6466	494	15
3040-01-271-3823	39	41	5340-01-271-6467	496	28
3040-01-271-3824	238	17	2510-01-271-7085	228	10
2540-01-271-3828	236	2	4710-01-271-7937	287	30
5340-01-271-4281	279	25	2540-01-271-8009	238	9
5340-01-271-4282	279	30	2540-01-271-8010	263	4
2540-01-271-5071	263	1	5340-01-271-9573	220	4
2540-01-271-5072	237	8	5340-01-271-9574	220	4
5340-01-271-5866	211	5	2540-01-271-9806	289	15
	291	3	2590-01-271-9807	289	26
	291	3	5999-01-272-0018	338	12
	297	5		339	9
	297	5		410	12
4720-01-271-6151	300	6	2510-01-272-0536	224	3
3110-01-271-6355	39	20	2510-01-272-0537	222	6

CROSS-REFERENCE INDEXES

NATIONAL STOCK NUMBER INDEX

STOCK NUMBER	FIG.	ITEM	STOCK NUMBER	FIG.	ITEM
2510-01-272-0538	288	14	5330-01-272-7471	347	8
5310-01-272-1356	56	4	5330-01-272-7472	347	6
5330-01-272-2601	222	4	5330-01-272-7473	295	3
5340-01-272-2635	289	7	5365-01-272-7482	300	14
5365-01-272-2663	39	73	5340-01-272-7493	288	31
5340-01-272-2677	39	34	5340-01-272-7495	287	2
5340-01-272-2732	224	17	5365-01-272-7502	39	15
5340-01-272-2801	218	4	5365-01-272-7504	335	11
5365-01-272-2806	289	18		336	8
5310-01-272-3311	494	9	5307-01-272-7539	39	54
	496	6	4030-01-272-7573	311	9
5340-01-272-3353	213	3		312	5
5340-01-272-3389	58	6	5340-01-272-7712	311	1
5340-01-272-3402	287	10	5330-01-272-7727	223	2
5340-01-272-3403	257	7	5340-01-272-7814	218	8
2510-01-272-3951	288	12	5340-01-272-7815	260	9
2510-01-272-3952	288	14	5305-01-272-8302	39	78
2510-01-272-3953	288	16	5305-01-272-8322	292	22
5306-01-272-4798	39	24	5305-01-272-8323	292	20
5310-01-272-4823	292	9	5330-01-272-8337	39	71
5310-01-272-4831	39	48	5365-01-272-8376	298	5
5365-01-272-4866	237	4	5342-01-272-8391	492	4
5365-01-272-4867	237	10	5340-01-272-8405	289	17
5365-01-272-4877	39	50	5340-01-272-8409	215	2
5340-01-272-4935	289	24	5340-01-272-8410	214	31
5340-01-272-4942	217	4	5340-01-272-8431	259	8
5340-01-272-4962	289	21		264	4
5305-01-272-5433	65	23	5365-01-272-8435	93	24
	260	6		95	41
	289	27	5305-01-272-9024	39	36
5310-01-272-5464	300	10	5305-01-272-9025	39	47
5310-01-272-5470	238	14	5305-01-272-9034	339	23
5330-01-272-5474	39	2	5305-01-272-9042	56	25
5340-01-272-5516	39	5		57	2
5340-01-272-5517	219	7		65	2
5340-01-272-5594	287	29		92	11
5340-01-272-5595	58	1		95	29
5340-01-272-5611	213	38		283	23
5340-01-272-5652	289	21		304	9
5940-01-272-5800	52	26		339	1
5355-01-272-5824	56	24	5330-01-272-9071	39	17
5340-01-272-6520	264	5	5365-01-272-9082	308	6
	265	5	5340-01-272-9103	237	8
5310-01-272-6546	287	32	5340-01-272-9105	288	18
5365-01-272-6574	298	2	5340-01-272-9109	294	3
5340-01-272-6578	219	2	5340-01-272-9145	222	16
5340-01-272-6633	238	12	5365-01-272-9275	96	31
5310-01-272-7449	238	23	5305-01-272-9959	238	7
	287	26	5310-01-272-9981	142	35
5330-01-272-7454	39	4		143	41

CROSS-REFERENCE INDEXES

NATIONAL STOCK NUMBER INDEX

STOCK NUMBER	FIG.	ITEM	STOCK NUMBER	FIG.	ITEM
5310-01-272-9985	289	25	5975-01-275-2695	229	4
5330-01-272-9995	219	8	5330-01-275-3381	296	8
5365-01-273-0010	298	9	5360-01-275-3512	218	2
5320-01-273-0020	287	15	2540-01-275-6202	287	21
5315-01-273-0096	287	22	2540-01-275-6203	288	15
5340-01-273-0136	260	5	2510-01-275-8026	211	9
6220-01-273-0500	47	4	5920-01-275-8096	39	58
2510-01-273-0572	343	8	5340-01-275-8567	253	29
5310-01-273-1635	64	20		279	31
5340-01-273-1680	289	7	5340-01-275-8568	256	1
5340-01-273-1721	492	3		257	4
5340-01-273-2342	213	10	5306-01-276-0848	35	15
	214	8	2540-01-276-1451	224	5
5340-01-273-2368	490	6		237	15
5340-01-273-2380	59	21	9330-01-276-1470	287	8
5340-01-273-2381	215	8	5306-01-276-1621	283	11
5320-01-273-4601	224	10		438	11
	294	8	5340-01-276-3615	220	7
5340-01-273-4667	287	25		237	1
5340-01-273-4668	57	9	5305-01-276-4855	157	1
5365-01-273-4690	338	3	5305-01-276-4870	57	1
5306-01-273-6333	154	2	4420-01-276-5050	495	15
5340-01-273-6944	39	70	2510-01-276-5058	54	8
4730-01-273-7660	343	11		55	1
2510-01-273-8376	213	35	2590-01-276-5071	54	3
5340-01-274-3021	52	15	5340-01-276-5850	290	1
5340-01-274-3184	237	14	2540-01-276-5928	289	11
5340-01-274-3287	260	12	2540-01-276-5935	224	7
5340-01-274-3295	293	13	5340-01-276-6673	211	12
5325-01-274-3317	95	30		212	6
5340-01-274-3498	216	1	5340-01-276-6738	496	18
5365-01-274-3573	339	26	5340-01-276-7415	213	7
2510-01-274-4234	455	KITS		214	3
5365-01-274-4674	338	5	2590-01-276-7633	65	1
5365-01-274-4675	95	38	6150-01-276-7698	54	4
2510-01-274-4901	222	24	5970-01-276-7753	BULK	44
5330-01-274-6106	296	5	2540-01-277-2313	52	1
5342-01-274-6210	290	1	5365-01-277-2387	283	13
5340-01-274-7337	258	1		438	13
	259	9	5340-01-277-4426	219	9
5342-01-274-9884	155	8	5340-01-277-4427	155	4
5340-01-274-9899	238	16	5340-01-277-4613	215	7
5342-01-275-0532	217	5	5340-01-277-4619	259	2
5310-01-275-1189	222	14	5340-01-277-5129	258	3
5320-01-275-1998	64	2		259	6
	197	14		260	19
	199	53		262	14
	212	21	5340-01-277-8125	213	40
	332	12	5342-01-277-9101	147	6
	379	27	5342-01-277-9102	147	3

CROSS-REFERENCE INDEXES

NATIONAL STOCK NUMBER INDEX

STOCK NUMBER	FIG.	ITEM	STOCK NUMBER	FIG.	ITEM
4710-01-278-1053	12	10	5935-01-282-7833	57	5
5315-01-278-2123	292	21	2540-01-282-8562	300	16
5305-01-278-7118	494	17	5360-01-282-9316	280	23
5340-01-278-8588	213	39		281	23
	214	32	9390-01-282-9949	296	7
5310-01-278-9555	208	21	5340-01-283-2458	247	9
	283	19	5305-01-283-7776	293	21
5360-01-278-9723	238	20	9905-01-283-7937	345	17
4130-01-278-9837	495	10	7690-01-283-7938	345	4
4720-01-279-5149	331	31	5310-01-283-8482	383	7
2590-01-279-5714	21	6	6220-01-284-2709	61	8
2540-01-280-4159	293	18	4520-01-284-7099	345	22
2510-01-280-4240	293	2	5315-01-284-9812	21	13
5310-01-280-5796	379	25	2940-01-285-2942	343	20
5365-01-280-5875	337	25	6150-01-285-3901	96	1
5340-01-280-5985	311	16	6110-01-285-3902	349	9
5315-01-280-6185	230	9	5305-01-285-4923	44	10
	287	23	4710-01-285-5123	496	20
5342-01-280-6264	288	25	2540-01-285-6066	498	4
5310-01-280-6751	39	56	2540-01-285-6087	56	1
5975-01-280-8922	57	10	2530-01-285-8381	169	23
5330-01-281-0911	293	29	5307-01-286-6007	279	24
2510-01-281-1032	228	6	5310-01-286-6077	44	9
5340-01-281-3429	288	18		234	3
5330-01-281-6523	BULK	58		239	4
	BULK	74	5340-01-286-6191	62	11
	BULK	77	5306-01-286-7182	203	25
5340-01-281-7795	496	5		204	10
5340-01-281-7798	498	12	5905-01-287-4255	349	3
7690-01-281-8341	357	6	5905-01-287-4256	349	11
4720-01-282-0143	496	22	5340-01-287-5825	227	34
4720-01-282-0160	496	24		227	35
5340-01-282-0469	498	2	5340-01-287-6352	262	15
5330-01-282-0913	341	5	5310-01-287-6543	345	27
5340-01-282-1115	311	15	5310-01-287-6557	349	12
4130-01-282-1895	496	2	5930-01-287-6698	58	5
5330-01-282-2208	498	13	5365-01-287-8645	491	9
5330-01-282-2213	277	10	5310-01-287-8726	345	13
5330-01-282-2214	496	12	5340-01-287-8761	260	15
	498	1	5820-01-287-9612	428	KITS
2930-01-282-2524	498	9	6150-01-287-9917	345	43
5305-01-282-2667	39	31	6150-01-287-9918	345	9
5340-01-282-2670	265	4	6150-01-287-9923	349	10
	289	16	6150-01-287-9924	349	2
5305-01-282-3386	224	9	6150-01-287-9925	349	1
5342-01-282-4853	71	8	6150-01-287-9926	349	13
4730-01-282-5075	361	24	5331-01-288-1062	467	4
3030-01-282-6968	35	1		491	10
	472	19	5305-01-288-1129	349	7
5935-01-282-7833	52	6	5305-01-288-1130	349	5

CROSS-REFERENCE INDEXES

NATIONAL STOCK NUMBER INDEX

STOCK NUMBER	FIG.	ITEM	STOCK NUMBER	FIG.	ITEM
5340-01-288-1242	491	24	5325-01-290-1695	91	12
5310-01-288-1257	213	34	5995-01-290-1719	426	1
	214	27		427	1
5330-01-288-1307	KITS	56	5340-01-290-2263	337	14
5340-01-288-2127	292	6	5340-01-290-2265	295	2
2540-01-288-5240	KITS		5340-01-290-2279	417	6
5640-01-288-5547	493	5	5330-01-290-2709	337	9
5340-01-288-6550	307	10	5340-01-290-2761	337	11
	308	11	5315-01-290-3327	156	10
5340-01-288-6551	55	15	2815-01-290-3705	491	23
5975-01-288-6594	345	11	2520-01-290-3921	KITS	87
2540-01-288-8567	KITS	52	5340-01-290-4887	425	4
2510-01-289-2233	226	36		427	5
5340-01-289-3228	498	16	5340-01-290-4888	426	7
5340-01-289-3231	337	10	2940-01-290-5014	337	8
5340-01-289-3243	429	2	2510-01-290-5675	423	5
5340-01-289-3244	342	7	5340-01-290-6234	128	65
5340-01-289-3245	295	11		129	37
2520-01-289-3617	KITS	86	5305-01-290-6290	345	5
5365-01-289-4434	35	10	5340-01-290-6331	345	3
5340-01-289-4474	307	11	5340-01-290-6342	417	14
5340-01-289-4475	53	2	5340-01-290-6343	426	3
6150-01-289-4761	424	1	3040-01-290-6757	337	22
5325-01-289-5038	92	19	3040-01-290-6758	337	16
5340-01-289-5055	308	12	3040-01-290-6760	337	23
5310-01-289-5455	154	4	5305-01-290-8206	21	10
5940-01-289-5955	96	14	5340-01-290-8360	21	9
5950-01-289-6007	491	8	5340-01-290-8390	417	17
5365-01-289-6169	92	18	5340-01-290-8473	423	6
5325-01-289-6196	95	45	2920-01-290-9245	45	17
5315-01-289-6212	271	11	2590-01-291-1033	417	13
	271	24	2540-01-291-1043	343	2
5340-01-289-6216	53	1	5340-01-291-2301	307	5
5342-01-289-7708	295	12	7690-01-291-2974	354	6
5340-01-289-7793	494	16	2520-01-291-2975	140	4
5365-01-289-7852	35	11		147	4
5325-01-289-7859	74	5	5340-01-291-4537	417	12
	91	13	2530-01-291-4597	154	3
	493	6	5330-01-291-4615	BULK	57
2510-01-289-8258	226	36	6150-01-291-4809	345	41
2510-01-289-8259	226	36	5340-01-291-5186	425	7
2510-01-289-8260	226	36		427	8
2540-01-289-8328	345	28	5340-01-291-5711	417	10
2540-01-289-8329	345	39	5995-01-291-6377	425	1
2540-01-289-8330	KITS	51		426	2
5306-01-289-9197	108	1		427	2
5330-01-289-9231	425	12	5995-01-291-6384	428	1
2520-01-289-9663	491	1	5340-01-291-8915	418	3
2540-01-290-0715	345	36		419	3
4320-01-290-0748	491	26		420	8

CROSS-REFERENCE INDEXES

NATIONAL STOCK NUMBER INDEX

STOCK NUMBER	FIG.	ITEM	STOCK NUMBER	FIG.	ITEM
5340-01-291-8915	421	5	5330-01-298-6009	296	9
	422	7	5310-01-298-7770	398	21
	423	11	5365-01-298-7780	293	28
5307-01-291-9018	30	5	5330-01-298-8127	340	7
	490	4	5355-01-298-8571	280	44
5310-01-292-5354	42	12		281	44
5340-01-292-5402	42	9	5340-01-298-9691	417	14
	408	23	5975-01-299-2468	BULK	52
	475	7	5340-01-299-2963	252	28
3010-01-292-6428	148	9	5310-01-299-6460	327	4
5940-01-292-6907	345	6	4010-01-299-7699	293	24
5325-01-292-7558	485	24	5975-01-299-7781	52	7
5340-01-292-8404	37	12		57	6
	38	3	4720-01-299-8469	337	20
	42	1	2990-01-299-8820	401	13
	408	24	5315-01-300-3012	280	24
	475	12		281	24
5340-01-293-0125	35	18	5340-01-300-3715	141	13
	42	1		149	7
4010-01-293-0586	BULK	53	4130-01-300-6350	494	3
6150-01-293-4074	349	6	2540-01-300-8744	375	21
5330-01-293-5345	163	4		KITS	44
5340-01-293-5558	163	2	2540-01-300-8745	KITS	43
2540-01-293-6926	368	2	5340-01-301-7929	147	10
5340-01-294-3230	300	3	2540-01-302-2595	432	KITS
9905-01-294-3356	52	8	4140-01-303-1338	404	18
	57	7	5310-01-303-4701	43	31
5340-01-294-4415	300	2		425	6
5340-01-295-1088	431	5		426	9
5340-01-295-8169	431	1		427	7
5340-01-296-1736	494	6	2510-01-303-5769	47	8
5340-01-296-2814	294	6	5310-01-304-8733	407	12
5305-01-296-7762	343	6		407	30
	494	1	5961-01-305-8848	60	8
5306-01-296-8600	491	22	3120-01-306-3577	314	31
4730-01-296-9318	337	4	5340-01-306-3606	300	4
2530-01-296-9333	138	8	3010-01-306-4113	458	24
	145	8	2590-01-306-5881	227	9
2540-01-296-9358	343	13	5330-01-306-7887	458	23
5340-01-297-1549	296	13	5365-01-306-9955	458	9
5340-01-297-2800	21	5	2510-01-307-0152	331	7
6220-01-297-3217	61	9		332	44
5340-01-297-4127	64	1	3040-01-307-6157	458	3
4730-01-297-5111	337	5	2590-01-307-9303	468	14
2520-01-297-5200	148	8	5310-01-308-0131	199	8
6680-01-298-0498	47	12	5340-01-308-2168	482	20
4730-01-298-4363	401	3	5340-01-308-3851	484	3
5310-01-298-4686	279	5	4010-01-308-9168	482	6
5330-01-298-4713	211	28	5305-01-309-1521	458	1
	212	24	5995-01-309-2953	82	1

CROSS-REFERENCE INDEXES

NATIONAL STOCK NUMBER INDEX

STOCK NUMBER	FIG.	ITEM	STOCK NUMBER	FIG.	ITEM
5640-01-309-3866	200	4	4710-01-314-4485	11	16
5640-01-309-3867	200	1	4710-01-314-4486	11	23
5640-01-309-3868	200	2	4710-01-314-4487	11	18
5640-01-309-3870	200	3	4710-01-314-4488	11	28
5330-01-309-4340	482	16	4710-01-314-4489	11	30
2540-01-309-4459	23	11	5340-01-314-4951	83	26
	24	12	6150-01-314-5241	381	4
6130-01-309-6458	39	53	5365-01-314-5544	379	4
5325-01-309-7164	379	16		379	6
5340-01-309-7900	296	16	5340-01-314-5567	379	11
5340-01-310-1189	213	16	5340-01-314-5602	104	19
5340-01-310-1658	214	12		105	26
5340-01-310-5321	224	4	6150-01-314-5643	381	1
5330-01-310-6780	4	27	5340-01-314-5957	210	15
2920-01-310-9973	39	28		213	23
2920-01-310-9978	39	16		231	3
5340-01-311-1633	104	18		234	15
4730-01-311-4294	17	4		254	5
5330-01-311-7953	BULK	61		254	11
	BULK	91		254	17
5310-01-312-4777	203	22		287	5
5975-01-312-5469	417	1		292	2
2590-01-312-7355	BULK	47		318	4
2540-01-313-0678	230	6	5330-01-314-6781	104	21
3020-01-313-0682	34	20	5340-01-314-6838	379	51
5310-01-313-3562	329	16	2540-01-314-7834	230	1
	461	4		235	1
4910-01-313-8839	353	1	2540-01-314-7835	230	7
4710-01-313-9340	379	31	2815-01-314-7940	1	1
2540-01-314-0142	397	KITS	3990-01-314-8393	199	19
2930-01-314-0145	379	33		199	19
2990-01-314-0151	379	30		199	19
2540-01-314-1121	284	16		199	19
	439	9		251	20
2530-01-314-1129	157	22		270	12
	158	12		296	3
	158	12	2540-01-314-9320	381	KITS
2540-01-314-1130	379	26	2540-01-314-9378	230	2
2540-01-314-1188	329	2		235	2
2540-01-314-1189	329	3	2540-01-314-9379	432	1
2540-01-314-1190	329	3	2540-01-314-9380	432	1
5340-01-314-1955	329	17	6150-01-315-1148	381	3
5340-01-314-1956	329	15	5310-01-315-1535	379	38
5935-01-314-2084	380	9	5330-01-315-1609	104	20
2540-01-314-2101	329	5		105	27
5340-01-314-2445	379	35	2540-01-315-3143	234	2
2540-01-314-2782	320	2		239	1
2540-01-314-2786	316	1	4730-01-315-3242	385	9
4710-01-314-4483	11	11	2540-01-315-3358	234	2
4710-01-314-4484	11	17	5310-01-315-3403	234	10

CROSS-REFERENCE INDEXES

NATIONAL STOCK NUMBER INDEX

STOCK NUMBER	FIG.	ITEM	STOCK NUMBER	FIG.	ITEM
5310-01-315-3403	235	13	4030-01-316-1551	187	16
	239	7		188	12
	402	10	5306-01-316-2433	234	1
5365-01-315-3595	329	4		239	10
5307-01-315-3597	8	12	4720-01-316-2538	368	39
	36	18		386	8
	38	18		BULK	14
	42	2	2590-01-316-2581	319	4
	408	29	4520-01-316-2585	387	9
	475	15	2540-01-316-2588	393	10
5340-01-315-3611	329	10	2540-01-316-2597	387	6
2540-01-315-3762	395	6	2520-01-316-2630	178	11
5340-01-315-4120	379	47		436	6
5340-01-315-4955	379	15	5340-01-316-2959	329	15
5305-01-315-7066	239	2	5307-01-316-2986	329	14
	402	4	2540-01-316-6624	321	
5306-01-315-7087	239	3	5365-01-316-8966	382	2
5306-01-315-7088	234	7	5365-01-316-8985	392	5
5360-01-315-7211	316	11	5340-01-317-0147	181	17
	320	10	5305-01-317-0409	393	6
	324	13	2590-01-317-0534	389	13
	324	27	2590-01-317-0535	389	13
	378	18	2540-01-317-0728	366	37
5360-01-315-7212	316	11	2540-01-317-0820	390	1
	320	10	4520-01-317-0929	387	3
	320	22	2540-01-317-1024	390	10
	320	22	4710-01-317-1044	387	14
	324	13	4710-01-317-1045	385	7
	324	27	4710-01-317-1046	384	2
	375	18	5340-01-317-1470	181	4
	378	18	5340-01-317-2675	388	17
5340-01-315-7223	72	23	2540-01-317-3309	379	28
	73	10	2590-01-317-3952	395	2
7690-01-315-8539	354	3	2590-01-317-3953	383	4
7690-01-315-8540	380	11	5310-01-317-4022	391	6
5305-01-315-8649	69	33	2540-01-317-4289	395	10
	434	4	2590-01-317-4854	393	8
	435	9	2590-01-317-4856	383	3
2590-01-315-9128	188	8	2930-01-317-5358	28	5
5305-01-315-9512	392	2	5330-01-317-5392	393	5
2590-01-316-0084	185	9	5330-01-317-5393	395	4
	186	14	6150-01-317-5853	72	25
	187	13		434	1
2510-01-316-0216	389	8		435	1
4710-01-316-0222	11	12	5340-01-317-7501	389	5
2540-01-316-0892	317		9905-01-317-7986	380	10
5306-01-316-1456	234	12	9905-01-317-7987	380	6
5340-01-316-1507	329	17	5310-01-317-8164	395	8
4030-01-316-1551	183	2	2590-01-317-8292	395	3
	185	12	5340-01-317-9086	391	7

CROSS-REFERENCE INDEXES

NATIONAL STOCK NUMBER INDEX

STOCK NUMBER	FIG.	ITEM	STOCK NUMBER	FIG.	ITEM
5340-01-318-0212	433	11	6150-01-324-6356	383	9
5330-01-318-1998	395	5	5330-01-324-8260	172	19
5340-01-318-2040	391	2	5340-01-325-2891	433	6
5340-01-318-2041	392	10	4720-01-325-6985	370	4
5365-01-318-2066	388	4	2510-01-325-8741	375	15
5930-01-318-2809	380	8	5365-01-326-1153	368	25
5340-01-318-3366	433	3	5342-01-326-2583	365	19
5310-01-318-5237	389	4	2910-01-326-9221	10	2
2540-01-318-9229	230	8	5310-01-327-0387	337	15
5330-01-318-9780	395	7	3040-01-327-1426	431	4
2815-01-319-1433	1	2	2590-01-328-2904	437	KITS
2590-01-319-5435	400	KIT	2540-01-329-8072	317	
5330-01-319-7302	387	10	2540-01-329-8073	319	
5340-01-319-9426	391	9	2540-01-329-8074	323	
5340-01-320-1079	379	45	2540-01-329-8075	321	
5340-01-320-2060	393	2	2540-01-329-8649	378	1
2910-01-320-6645	384	11	4730-01-329-9151	29	11
5340-01-320-8662	387	11	3950-01-329-9890	314	29
2540-01-320-8731	401		2590-01-329-9910	314	2
	401	KITS	2510-01-330-2249	378	11
2540-01-320-8918	388	13	2510-01-330-2250	378	11
3030-01-321-4482	37	19	2590-01-330-6102	314	13
	408	2	2540-01-330-6169	319	1
	475	27	2540-01-330-6170	322	1
2530-01-321-4497	436	KITS	2540-01-330-6171	316	4
1005-01-321-6774	431	KITS	2540-01-330-6172	320	2
5330-01-321-8622	BULK	59	2540-01-330-6173	316	1
	BULK	79	2510-01-330-6174	316	7
	BULK	81		320	19
4730-01-322-9160	302	4	2510-01-330-6175	316	7
	305	6		320	19
	306	4	2510-01-330-6176	320	5
	309	5	2540-01-330-6177	320	1
4730-01-322-9871	368	15	2510-01-330-6576	320	5
2990-01-322-9879	368	17		320	5
2990-01-322-9880	365	11	5330-01-331-1207	KITS	
2990-01-322-9881	368	13	5305-01-331-6284	437	3
2910-01-323-0123	368	35	2510-01-332-0128	271	1
2990-01-323-2562	365	7	2510-01-332-0129	271	1
2590-01-323-5153	155	9	5340-01-332-7515	208	8
5306-01-323-5534	198	22	5340-01-332-7516	437	9
5306-01-323-5535	198	22	5340-01-332-7599	331	19
	207	8		332	23
	280	50		370	5
	281	50	5340-01-332-7602	225	6
5330-01-324-0906	121	2		226	39
	122	6	5340-01-333-0162	346	3
5340-01-324-1076	431	6	3030-01-333-2286	37	19
5977-01-324-6323	45	45	2590-01-333-2999	377	12
6150-01-324-6355	387	18	5315-01-333-5117	404	12

CROSS-REFERENCE INDEXES

NATIONAL STOCK NUMBER INDEX

STOCK NUMBER	FIG.	ITEM	STOCK NUMBER	FIG.	ITEM
5310-01-333-5245	62	29	5995-01-339-0190	282	1
	379	50		435	4
	485	27	6250-01-339-6271	65	11
5320-01-333-5545	199	47	5330-01-340-5627	205	6
5340-01-333-5851	234	8	5940-01-341-7689	93	2
4710-01-333-5995	277	42	5330-01-341-8963	206	6
5340-01-333-6038	197	3	6145-01-341-9591	BULK	80
2530-01-333-6068	157	5	2590-01-342-4918	433	KITS
2530-01-333-8263	157	5	2510-01-344-4169	271	18
5330-01-334-2834	205	5	2510-01-345-4365	271	1
	206	5	4310-01-345-5723	505	
5340-01-334-2887	239	5	4730-01-346-1063	167	24
5340-01-334-4241	234	20	2520-01-346-1374	137	4
2540-01-334-4333	403	18	5331-01-346-3806	167	25
2640-01-334-9453	167	17	4730-01-347-7342	385	6
5120-01-335-1094	505	1	5930-01-347-9216	327	12
5120-01-335-1096	505	1	5999-01-348-0302	40	19
5120-01-335-1099	505	1	5920-01-348-0303	40	32
5120-01-335-1100	505	1	2920-01-348-1526	40	46
6150-01-335-3087	39	79	3120-01-348-3364	40	20
2510-01-335-4170	199	55	3110-01-348-4867	40	10
2510-01-335-4171	197	12		407	33
2540-01-335-4482	199	3	2510-01-348-6670	271	1
2640-01-335-4583	167	23	5315-01-348-6880	40	45
5120-01-335-5847	505	6	5365-01-348-6971	40	34
2510-01-335-7343	283	24	5306-01-348-8310	40	24
2510-01-335-7363	227	10	5310-01-348-8313	40	38
4710-01-335-7523	277	15	5310-01-348-8314	40	28
5331-01-335-7592	19	8	5310-01-348-8360	40	44
2510-01-335-7799	197	25		407	2
5331-01-335-8878	167	16	5310-01-348-8384	40	43
2540-01-336-0791	378	4	5310-01-348-8385	40	36
5340-01-336-3004	251	27	5310-01-348-8386	40	33
	252	27	5310-01-348-8392	40	29
	253	22	5310-01-348-8393	40	25
	254	27	5310-01-348-8398	40	51
	255	21		407	13
2530-01-336-3127	167	19	6115-01-349-5320	40	5
5331-01-336-3236	73	13	4140-01-350-0839	40	41
2530-01-336-5740	167	14	5975-01-350-1987	40	21
5306-01-336-7175	167	15		407	37
2540-01-337-0242	323	5	7690-01-350-2094	358	4
2590-01-337-4071	433	KITS	5310-01-350-4257	40	22
5310-01-337-7034	42	12		407	46
6220-01-338-2059	65	9	2510-01-350-4949	203	3
2530-01-338-2730	167	18	5970-01-350-5646	40	31
2530-01-338-3056	505		5310-01-350-8549	40	23
2540-01-338-8081	402	13		407	36
	402	KITS	2540-01-350-9380	379	18
2510-01-338-8087	209		5306-01-351-7742	345	23

CROSS-REFERENCE INDEXES

NATIONAL STOCK NUMBER INDEX

STOCK NUMBER	FIG.	ITEM	STOCK NUMBER	FIG.	ITEM
2930-01-353-5794	31	3	5310-01-358-5461	129	16
5355-01-353-6934	327	14	4720-01-358-6100	130	13
2510-01-354-0417	271	18	4710-01-358-6397	13	22
5320-01-354-2547	220	5		14	8
2540-01-354-4291	315	1	5360-01-358-6563	129	29
2520-01-356-9189	136	6	5360-01-358-6564	132	26
2520-01-356-9197	127	3	5340-01-358-6697	74	3
5325-01-357-1080	316	18	3040-01-358-7034	488	18
	320	33	5340-01-358-7595	180	26
	324	39	2590-01-358-7643	132	18
5360-01-357-2413	192	1	2590-01-358-7644	132	19
5120-01-357-3629	501	16	2520-01-358-7698	131	5
5120-01-357-3630	501	17	5340-01-358-7940	132	29
5120-01-357-3631	501	18	5325-01-358-7958	129	10
5120-01-357-3632	501	12	5325-01-358-7959	129	17
5120-01-357-3633	501	15	5325-01-358-7960	129	20
5340-01-357-3996	15	10	5325-01-358-7961	130	42
	16	9	5325-01-358-7962	130	34
2520-01-357-5043	136	16	5310-01-358-7974	130	4
2520-01-357-5044	137	19	5310-01-358-7975	130	7
2520-01-357-5056	148	25	5310-01-358-7978	132	25
4730-01-357-6523	385	5	5340-01-358-8000	129	30
4730-01-357-8739	13	23	4710-01-358-8410	130	12
	14	9	3040-01-358-8596	132	17
2510-01-357-8789	187	4	3020-01-358-8601	130	48
	456	1	4320-01-358-8608	130	40
2910-01-357-8798	15	1	3020-01-358-8656	130	9
2540-01-357-8939	288	1	3020-01-358-8657	130	15
5120-01-357-9123	501	19	2520-01-358-8658	130	10
2530-01-357-9708	164	1	3020-01-358-8659	130	33
2530-01-357-9776	163	7	3020-01-358-8661	130	8
4710-01-357-9968	161	6	3020-01-358-8662	130	16
5975-01-358-0021	40	27	3040-01-358-8690	129	13
2510-01-358-1176	187	7	3040-01-358-8691	130	44
	456	21	3040-01-358-8692	130	18
2510-01-358-1177	187	7	2520-01-358-8700	132	20
	456	21	2520-01-358-8701	132	13
2510-01-358-1178	187	4	3040-01-358-8708	129	24
	456	1	2520-01-358-8878	130	3
4710-01-358-1943	159	1	2520-01-358-8879	130	1
	160	12	2520-01-358-8880	129	2
3040-01-358-2102	152	17	2520-01-358-8881	129	9
4710-01-358-2127	13	21	2520-01-358-8883	132	22
	14	7	5340-01-358-9301	153	12
2520-01-358-3160	140	4	7690-01-358-9391	361	11
	147	4	5330-01-358-9532	128	59
5365-01-358-4641	130	17		129	31
5365-01-358-4642	132	24	5330-01-358-9533	130	31
5360-01-358-5420	132	28	5330-01-358-9540	130	30
5325-01-358-5450	129	5	5330-01-358-9541	130	11

CROSS-REFERENCE INDEXES

NATIONAL STOCK NUMBER INDEX

STOCK NUMBER	FIG.	ITEM	STOCK NUMBER	FIG.	ITEM
5331-01-358-9545	129	28	5120-01-361-3101	501	14
5305-01-359-0167	74	8	6220-01-361-5084	67	8
3040-01-359-1116	129	8	5305-01-361-5353	225	52
3040-01-359-1117	129	19		306	8
3040-01-359-1118	130	37		346	5
3040-01-359-1119	130	20		410	23
3020-01-359-1136	130	6	5340-01-361-6658	184	3
3020-01-359-1211	129	18	2530-01-361-8012	KITS	
5330-01-359-1292	130	35	5330-01-361-8013	KITS	
2510-01-359-2076	198	26	5330-01-361-8014	KITS	
4730-01-359-2217	130	14	5330-01-361-8015	KITS	
3020-01-359-2529	130	43	6150-01-361-8129	74	10
	130	47	2540-01-361-8206	187	1
6220-01-359-2870	61	10	2510-01-361-8213	199	39
4710-01-359-2956	15	6	9905-01-362-2014	355	4
	16	6	6220-01-362-5211	97	9
	366	18	6150-01-362-5229	81	8
5306-01-359-4529	129	1	5310-01-362-6171	407	10
5306-01-359-4530	130	2	5320-01-362-6195	247	7
5305-01-359-4586	129	27	2920-01-363-5173	40	2
2640-01-359-5643	KITS		2510-01-364-3120	KITS	
3110-01-359-6669	130	5	3020-01-364-3398	148	27
3120-01-359-6760	129	6	9905-01-364-7342	354	12
3120-01-359-6764	132	27	4240-01-365-0982	307	15
5970-01-359-7836	98	12	5340-01-365-8796	287	4
3110-01-359-8858	130	45	5140-01-366-0642	512	8
4820-01-359-9489	159	2	5120-01-366-0893	512	1
	160	11	5120-01-366-0894	512	9
5306-01-360-0926	438	4	5120-01-366-0895	512	5
3120-01-360-0977	130	36	5120-01-366-2520	512	2
3130-01-360-1050	129	15	5310-01-366-3539	42	11
3130-01-360-1051	129	21		77	8
	130	36	5120-01-366-4713	512	6
5306-01-360-1123	283	17	5120-01-366-6260	512	7
	438	16	2510-01-366-6968	271	18
5306-01-360-1125	453	19	2510-01-366-6969	271	18
5306-01-360-1128	188	37	5120-01-366-9468	512	3
	453	12	5340-01-367-2070	266	14
5305-01-360-1136	30	12	5120-01-367-3536	510	8
	33	15	5120-01-367-3582	505	2
3120-01-360-1202	129	12	5120-01-367-3585	505	2
5306-01-360-1637	439	1	2510-01-369-3230	227	27
4720-01-360-2380	27	7	2920-01-371-4030	405	KITS
3040-01-360-4448	130	29	5306-01-371-4685	198	15
5330-01-360-5271	105	17	2640-01-371-8332	KITS	26
3120-01-360-5960	130	46		KITS	260
5310-01-361-1163	439	7	6220-01-372-3883	61	4
	462	8	5999-01-372-5601	39	80
	465	1		41	16
	485	25		475	26

CROSS-REFERENCE INDEXES

NATIONAL STOCK NUMBER INDEX

STOCK NUMBER	FIG.	ITEM	STOCK NUMBER	FIG.	ITEM
5999-01-372-5601	476	25	5365-01-381-6122	148	20
6680-01-372-5748	506	3	5365-01-381-6145	148	20
2510-01-372-9734	228	4	5365-01-381-6151	148	20
2510-01-373-0131	228	3	5365-01-381-6154	148	20
5925-01-373-1034	367	12	5365-01-381-6158	148	20
2510-01-373-2783	228	1	5365-01-381-6164	148	20
2510-01-373-2784	228	5	5365-01-381-6165	148	20
5120-01-373-4979	507	1	5365-01-381-6174	148	20
5120-01-373-4980	507	1	5365-01-381-6175	148	20
5120-01-373-4981	507	5	5365-01-381-6188	148	20
5120-01-373-4984	508	5	5365-01-381-6197	148	20
5120-01-373-4985	508	2	5365-01-381-6210	148	20
5120-01-373-4987	507	3	5365-01-381-6211	148	20
5120-01-373-5984	508	4	5365-01-381-6223	148	20
2510-01-373-7877	228	7	5365-01-381-6226	148	20
2510-01-373-8445	228	8	5365-01-381-6229	148	20
2510-01-374-0000	228	9	5365-01-381-6240	148	20
5310-01-374-4512	261	3	5365-01-381-6250	148	20
2510-01-376-1092	368	31	5365-01-381-6258	148	20
2590-01-377-6819	250	7	5365-01-381-6261	148	20
5340-01-378-5201	69	16	5365-01-381-6276	148	20
5340-01-378-7525	69	17	5365-01-381-6278	148	20
2920-01-378-8035	434	KITS	5365-01-381-6292	148	20
5330-01-378-8572	4	32	5365-01-381-6303	148	20
5330-01-379-1139	122	4	5365-01-381-6313	148	20
5340-01-380-4561	153	1	5365-01-381-6317	148	20
5365-01-380-5345	148	20	5365-01-381-6332	148	20
5365-01-380-7340	231	23	2540-01-381-8392	231	1
5305-01-380-9163	333	14	2540-01-381-8988	231	18
5340-01-381-1266	401	19	2540-01-381-9331	231	20
5365-01-381-1783	401	7	5365-01-381-9582	148	20
5340-01-381-1808	140	9	5365-01-381-9588	148	20
5330-01-381-1810	327	35	5365-01-382-0973	148	17
5340-01-381-2045	401	17	5365-01-382-0986	454	5
5365-01-381-2215	303	8	5365-01-382-1058	148	17
5340-01-381-2248	333	16	5365-01-382-1132	148	17
5305-01-381-2296	231	11	5365-01-382-1135	148	17
5305-01-381-2305	231	2	5365-01-382-1157	148	17
5365-01-381-4487	148	17	5365-01-382-1159	148	17
5365-01-381-5166	148	20	5365-01-382-1162	148	17
5365-01-381-5174	148	20	5365-01-382-1166	148	17
5310-01-381-5328	231	24	5365-01-382-1170	148	17
	454	4	5365-01-382-1171	148	17
5365-01-381-6076	148	20	5365-01-382-1177	148	17
5365-01-381-6080	148	20	5365-01-382-1178	231	30
5365-01-381-6086	148	20	5365-01-382-1181	148	17
5365-01-381-6110	148	20	5365-01-382-1235	148	17
5365-01-381-6112	148	20	5365-01-382-1240	148	17
5365-01-381-6113	148	20	5365-01-382-1273	148	17
5365-01-381-6120	148	20	4730-01-382-3165	302	1

CROSS-REFERENCE INDEXES

NATIONAL STOCK NUMBER INDEX

STOCK NUMBER	FIG.	ITEM	STOCK NUMBER	FIG.	ITEM
4730-01-382-3165	305	1	2530-01-386-5499	167	18
5365-01-382-3447	148	17	5340-01-386-6067	292	4
5365-01-382-3676	148	17	2540-01-386-8790	327	34
5365-01-382-3693	148	17	5305-01-386-9052	431	8
5365-01-382-3694	148	17	5340-01-387-0090	231	5
5365-01-382-3700	148	17	9905-01-387-1145	354	12
5365-01-382-3710	148	17	9905-01-387-1146	354	12
5365-01-382-3715	148	17	9905-01-387-2746	354	12
5365-01-382-3718	148	17	9905-01-387-2752	354	12
5365-01-382-3726	148	17	9905-01-387-2761	354	12
5310-01-382-5031	142	19	9905-01-387-2762	354	12
	143	26	5306-01-387-7457	270	31
	150	19	3120-01-388-1527	327	8
	151	26	5325-01-388-2363	456	10
7690-01-382-8471	354	14	5365-01-388-4449	148	17
2520-01-382-8728	138	1	5310-01-388-6205	398	7
2990-01-382-8796	401	6	5310-01-388-7420	274	19
2520-01-382-8874	138	1	5340-01-388-9512	KITS	53
5340-01-383-0462	21	3	2540-01-389-0984	286	7
5365-01-383-1925	138	5	5120-01-389-9992	501	22
	145	5	5305-01-390-0547	484	4
2520-01-383-2387	145	1	5310-01-390-5105	407	40
5340-01-383-2397	401	10	2540-01-390-5711	370	3
5365-01-383-3722	304	6	5120-01-391-5131	501	9
2540-01-383-5232	227	2	2540-01-391-7845	209	
2510-01-383-5444	283	24	5331-01-392-0830	73	15
2540-01-383-5660	231	4	5331-01-392-1793	73	11
2990-01-383-5689	401	16	9905-01-392-5794	355	4
2530-01-383-5740	169	9	9905-01-392-5795	355	4
2540-01-383-6470	286	25	9905-01-392-5796	355	4
6160-01-384-0325	231	32		355	4
2540-01-384-1012	227	26	9905-01-392-5797	355	4
2540-01-384-1028	227	27	9905-01-392-5798	355	4
4720-01-384-1212	301	5	9905-01-392-5799	355	4
5935-01-384-2610	73	1	9905-01-392-5800	355	4
6160-01-384-3922	231	31	2520-01-392-8435	110	11
9905-01-384-5311	354	12	9905-01-393-1830	355	4
5305-01-384-6279	407	32	9905-01-393-1833	355	4
2530-01-384-7154	169	13	9905-01-393-1834	355	4
5340-01-384-9987	4	18	9905-01-393-3794	354	8
5340-01-385-0057	377	3	9905-01-393-3795	355	4
9905-01-385-2633	354	12	9905-01-393-5622	354	12
9905-01-385-2639	354	12	9905-01-393-5623	354	12
2540-01-385-7497	289	8	5305-01-393-6311	160	22
2990-01-385-8988	401	5		162	10
2540-01-385-9000	327	33	9905-01-393-7128	355	4
2540-01-385-9031	327	39	5305-01-393-7801	210	11
2930-01-385-9108	333	19	9905-01-393-9357	354	12
2920-01-385-9823	408	KITS	5340-01-393-9371	369	11
2520-01-386-3384	137	20	5365-01-394-0440	370	14

CROSS-REFERENCE INDEXES

NATIONAL STOCK NUMBER INDEX

STOCK NUMBER	FIG.	ITEM	STOCK NUMBER	FIG.	ITEM
5365-01-394-2394	369	6	2590-01-396-1422	232	1
5340-01-394-2408	155	15	2590-01-396-1424	232	1
5340-01-394-2409	390	12	5340-01-396-3950	407	7
4720-01-394-3747	178	17	5935-01-396-3991	73	14
2530-01-394-3748	KITS		5325-01-396-4320	407	18
2990-01-394-3751	365	12	2590-01-396-5007	233	3
2540-01-394-4454	375	KITS	2540-01-396-7756	402	1
2540-01-394-4787	402	6	2540-01-396-7757	402	1
2540-01-394-4788	402	6	2540-01-396-7759	402	1
2540-01-394-4792	402	6	5340-01-396-8322	377	3
4720-01-394-6166	370	2	3130-01-396-8388	407	20
2540-01-394-6167	368	11	5310-01-396-8392	270	23
2530-01-394-6168	139	10	5935-01-397-0201	86	28
	KITS	350	5330-01-397-0374	105	14
4710-01-394-6169	366	15	5340-01-397-1388	262	1
4720-01-394-6170	368	44	4140-01-397-2228	407	38
	370	8	9905-01-397-3196	370	12
5340-01-394-7288	370	22	5935-01-397-3813	73	5
5340-01-394-7853	369	9	9905-01-397-6974	354	12
2590-01-394-8134	147	3	2920-01-397-7094	119	11
4730-01-394-8345	368	37	4320-01-398-2069	122	3
5340-01-394-8496	155	20	5330-01-398-3724	KITS	
4140-01-394-8583	407	42	2520-01-398-4589	105	15
5310-01-394-9280	370	10	4730-01-399-0241	178	16
2990-01-394-9670	365	9	5950-01-399-0257	119	28
2590-01-394-9672	234	4	2540-01-399-0785	402	1
2590-01-394-9673	233	3	2920-01-399-0794	407	43
2540-01-394-9679	402	6	2990-01-399-1023	105	9
2540-01-394-9682	402	6	2520-01-399-4691	105	1
2540-01-394-9683	402	6	2930-01-405-9885	26	1
5340-01-395-0812	369	3	5315-01-406-5019	353	6
5340-01-395-1244	365	24	5365-01-406-6336	455	4
5310-01-395-3549	213	22	2815-01-406-6675	1	1
	262	16	5342-01-406-6962	196	10
2540-01-395-3979	372	3		196	15
4710-01-395-3982	366	11	4010-01-406-6963	353	8
2540-01-395-4202	370	6	5340-01-406-6964	453	13
5310-01-395-8747	30	9	5340-01-406-6965	453	8
	36	20	5340-01-406-7413	455	8
	37	15	5340-01-406-7418	453	6
	38	20	2990-01-406-8738	54	5
	41	8	5310-01-406-9129	73	16
	472	1	4030-01-406-9325	353	5
	474	5	2590-01-406-9821	252	8
	475	13	2920-01-407-0532	36	4
	476	21		407	1
	490	8	2540-01-407-3296	369	5
2540-01-395-8771	402	KITS	2530-01-407-3977	KITS	
2540-01-395-8785	375	1	2510-01-407-6036	316	7
6150-01-396-0906	386	2		320	19

CROSS-REFERENCE INDEXES

NATIONAL STOCK NUMBER INDEX

STOCK NUMBER	FIG.	ITEM	STOCK NUMBER	FIG.	ITEM
2510-01-407-6037	316	7	4730-01-409-1204	125	18
	320	19	4820-01-409-1218	119	22
5320-01-407-6239	197	16	2520-01-409-1602	134	3
5340-01-407-7192	453	17	5315-01-409-1662	488	25
5305-01-407-7713	318	9	5330-01-409-1664	114	15
	485	23	5330-01-409-1665	122	30
	487	2	2520-01-409-1751	115	9
7690-01-407-8248	370	15	2520-01-409-1758	115	18
2540-01-407-9241	316	4	2520-01-409-1767	115	19
5305-01-407-9487	199	6	5330-01-409-1981	BULK	63
5307-01-408-4029	33	20	3040-01-409-2500	101	9
	37	18	3040-01-409-2501	134	4
	408	39	3040-01-409-2502	101	3
	475	25	4710-01-409-2504	125	4
	476	23	4710-01-409-2508	125	3
2520-01-408-4785	102	1	2520-01-409-2509	120	1
5340-01-408-5851	16	29	2520-01-409-2512	126	2
5340-01-408-6456	329	17		127	3
	461	2	2540-01-410-7034	454	KITS
5340-01-408-6458	210	6	2540-01-410-7035	454	KITS
5340-01-408-6459	210	12	5340-01-410-7036	453	KITS
5340-01-408-6460	329	15	2510-01-410-7169	199	27
	461	7	5330-01-410-7229	KITS	
5340-01-408-6462	210	5	3040-01-410-8054	101	5
5120-01-408-7051	510	15	3040-01-410-8068	107	13
	510	21	3040-01-410-8071	107	22
5315-01-408-7089	261	16	2520-01-410-8077	KITS	70
5340-01-408-7091	261	13	2520-01-410-8079	115	5
6220-01-408-7785	49	1		KITS	71
5325-01-408-7969	115	11	6150-01-410-8215	511	12
5325-01-408-7970	115	16	5120-01-410-8216	510	4
5325-01-408-7971	115	8	2520-01-410-8241	115	27
5325-01-408-7972	115	10	5305-01-410-8386	210	16
5325-01-408-7973	120	2		269	9
5360-01-408-7977	122	15	2540-01-410-8789	51	10
5315-01-408-8020	108	8	2590-01-410-8791	261	6
5120-01-408-8173	511	13	2540-01-410-8793	352	4
5365-01-408-8507	261	2		459	4
5340-01-408-8508	261	9	2540-01-410-8794	329	3
5340-01-408-8509	261	10		461	3
5340-01-408-8512	261	12	4010-01-410-9099	353	9
5340-01-408-8522	114	16	2815-01-410-9710	1	1
	115	25	3040-01-410-9965	101	8
5340-01-408-8523	188	16	2590-01-410-9967	261	5
5340-01-408-8525	KITS	32	2590-01-410-9968	197	9
5340-01-408-8526	455	7	5325-01-411-0066	210	13
5340-01-408-8529	188	16		225	48
5310-01-408-9593	127	6		226	28
5325-01-409-0211	127	8		269	7
5310-01-409-0897	462	14		269	7

CROSS-REFERENCE INDEXES

NATIONAL STOCK NUMBER INDEX

STOCK NUMBER	FIG.	ITEM	STOCK NUMBER	FIG.	ITEM
5325-01-411-0066	460	4	4710-01-412-1667	11	23
2510-01-411-0652	225	47	4710-01-412-1668	11	30
	226	27	4710-01-412-1669	11	12
	460	1	2540-01-412-2661	320	1
2510-01-411-0653	267	8	2590-01-412-2664	103	7
5306-01-411-1596	122	1	6150-01-412-3192	76	1
2910-01-411-2124	16	1	5340-01-412-3563	105	25
5307-01-411-2336	103	14	2590-01-412-3862	186	5
5306-01-411-2338	16	27	5310-01-412-4013	23	21
	464	6		30	4
5306-01-411-2342	101	7		35	4
2990-01-411-2728	24	1		36	14
2530-01-411-2729	169	6		38	14
2540-01-411-2733	188	7		152	5
2530-01-411-2735	169	8		152	15
2510-01-411-2736	199	26		270	20
2540-01-411-2737	254	8		278	10
2520-01-411-2749	110	12		283	7
4330-01-411-2786	119	17		341	7
5310-01-411-3422	49	6		409	7
	352	1		410	5
	459	1		411	13
	481	9		412	5
	484	11		414	3
2540-01-411-3946	166	10		415	12
2990-01-411-3947	24	14		425	15
2990-01-411-3954	24	5		426	13
2590-01-411-3958	210	9		427	14
2520-01-411-3959	115	21		428	4
2510-01-411-4175	210	8		456	19
5305-01-411-4455	453	16		462	3
5305-01-411-4456	261	15		463	2
3120-01-411-5783	122	31		463	2
3110-01-411-5784	115	15		464	2
3120-01-411-5787	122	31		476	3
2520-01-411-6540	119	13	2510-01-412-4969	180	15
3990-01-411-6575	210	7	4730-01-412-5213	14	27
2540-01-411-7519	453	10	4730-01-412-5216	14	13
5307-01-411-8340	261	4	5305-01-412-5994	144	12
4710-01-411-8488	11	18		152	12
4710-01-411-8489	11	16	5305-01-412-5995	16	28
4710-01-411-8492	11	17		464	5
2910-01-412-0047	14	29	6220-01-412-6420	97	10
5340-01-412-0141	KITS		2510-01-412-6761	320	5
2990-01-412-0142	24	16	5340-01-412-7514	188	10
4710-01-412-0273	14	1	2590-01-412-7564	186	10
3110-01-412-0490	115	3	6150-01-412-7774	511	11
3010-01-412-0673	129	19	2540-01-412-8610	186	1
5340-01-412-0867	162	6		456	3
2540-01-412-0929	321		4710-01-412-8611	11	11

CROSS-REFERENCE INDEXES

NATIONAL STOCK NUMBER INDEX

STOCK NUMBER	FIG.	ITEM	STOCK NUMBER	FIG.	ITEM
4710-01-412-8615	11	28	2510-01-413-8872	320	5
5325-01-412-8806	115	12	2530-01-413-8886	KITS	
5935-01-412-9146	76	7	6220-01-413-9828	97	9
2815-01-412-9289	1	2	2910-01-414-1272	10	2
2590-01-412-9560	186	10	2540-01-414-1275	24	4
2590-01-412-9570	186	5	5120-01-414-1849	511	14
2520-01-413-0080	136	16	5365-01-414-2895	143	31
5365-01-413-0275	266	22		151	31
5340-01-413-0282	186	12	2990-01-414-4072	24	28
	188	31	5330-01-414-6607	122	2
6150-01-413-0853	81	19	2530-01-414-7844	144	6
5945-01-413-0886	50	12	2510-01-414-7846	226	4
2540-01-413-1356	320	2	5340-01-414-8959	77	23
4710-01-413-1360	14	5	5935-01-415-4322	76	18
2530-01-413-1365	144	6	5935-01-415-4392	75	20
2530-01-413-1366	144	8		76	20
	152	8	5310-01-415-5245	76	19
6150-01-413-1845	82	1	5340-01-415-8672	210	2
6150-01-413-1847	82	1	2920-01-415-9497	40	46
2520-01-413-1899	129	13		407	34
2520-01-413-1900	129	9	5330-01-415-9612	130	20
2520-01-413-1902	129	18	5330-01-415-9613	130	30
2520-01-413-1904	130	29	5305-01-416-1269	130	27
5310-01-413-2049	166	9	5310-01-416-3009	130	28
5330-01-413-2118	105	24	5310-01-416-5447	101	6
2520-01-413-2595	98	1	6150-01-416-7899	70	12
2520-01-413-2612	98	1		474	10
5340-01-413-2689	24	11		475	4
2520-01-413-2724	137	19	5331-01-417-1043	167	16
2510-01-413-3259	226	4	5306-01-417-2467	167	15
5310-01-413-3276	225	32	5975-01-417-3267	435	KITS
	226	17	6150-01-417-3411	69	35
	461	1	2530-01-417-4908	167	14
2510-01-413-3360	225	12	3120-01-417-8178	130	31
2510-01-413-3618	267	8	2530-01-417-8450	167	19
2530-01-413-3653	143	1	2590-01-418-2135	419	KITS
	151	1	6220-01-418-4404	63	8
5330-01-413-3713	129	31	2640-01-419-6200	167	27
3040-01-413-4022	130	15	2640-01-419-6202	167	17
5340-01-413-4486	105	23	2640-01-419-6205	KITS	36
2520-01-413-5540	110	8	5360-01-420-0480	458	8
3120-01-413-6106	40	42	3040-01-420-1887	130	18
	407	44	2530-01-420-3837	170	6
6150-01-413-7946	70	2	2530-01-420-3839	170	2
	481	2	2590-01-420-4179	485	KIT
2510-01-413-8045	182	17	2530-01-420-5180	170	7
3110-01-413-8094	129	6	2530-01-420-7892	152	6
4710-01-413-8230	162	3	2530-01-420-7893	152	6
4730-01-413-8244	27	6	2530-01-420-7895	144	20
	125	9		152	20

CROSS-REFERENCE INDEXES

NATIONAL STOCK NUMBER INDEX

STOCK NUMBER	FIG.	ITEM	STOCK NUMBER	FIG.	ITEM
2530-01-420-7904	157	23	4030-01-426-4537	458	41
	158	13	5365-01-426-6643	458	26
2530-01-420-8025	KITS	9A	2930-01-426-7711	27	2
2930-01-420-8622	32	4	5305-01-428-6635	458	46
2530-01-420-8634	144	20	2590-01-429-3008	486	KIT
	152	20	6220-01-429-4596	47	13
2920-01-420-9968	38	4	3010-01-429-5333	458	29
	40	1	5305-01-429-9137	43	26
5340-01-421-1415	145	15	5305-01-429-9149	36	1
5340-01-421-1423	138	4		38	1
5340-01-421-1782	281	52		472	10
2530-01-421-2563	170	10		475	10
2520-01-421-4588	139	1	5340-01-429-9352	210	1
2520-01-421-4589	146	1	2920-01-429-9591	407	34
5935-01-421-4801	88	47	5340-01-430-0037	458	43
2510-01-421-8067	227	18	5962-01-430-0182	50	4
5365-01-421-8382	145	14	5962-01-430-0208	50	4
4720-01-421-9718	BULK	75	5925-01-430-2318	48	3
5120-01-422-0139	510	14		469	13
5120-01-422-0173	510	12	2815-01-430-2599	4	22
5120-01-422-0219	510	13	5940-01-430-2764	50	6
5120-01-422-0334	510	9	2520-01-430-2765	105	1
5120-01-422-1293	511	6	4820-01-430-4132	14	14
5120-01-422-1297	511	2	2520-01-430-5294	KITS	
5120-01-422-1300	510	5	5340-01-430-9239	321	25
5120-01-422-1301	511	5		376	21
5120-01-422-1302	511	3	5340-01-430-9240	321	25
5120-01-422-1306	511	4		376	21
5120-01-422-1308	510	6	2510-01-431-1339	460	KITS
5120-01-422-1310	510	16		460	KITS
5120-01-422-1313	510	3	4820-01-431-2499	19	10
5120-01-422-1318	510	19	5945-01-431-5195	458	38
5120-01-422-1324	510	20	5935-01-431-5656	458	37
5120-01-422-1326	510	7	7220-01-431-8340	210	10
5120-01-422-1329	510	10	2540-01-431-9182	459A	KIT
5120-01-422-5406	510	17	3120-01-432-1474	327	7
5120-01-422-5411	510	18	3020-01-432-2553	143	10
3040-01-422-9390	144	17		151	10
	152	17	5340-01-432-4870	189	5
5120-01-423-0032	510	2	5340-01-432-4876	182	12
2530-01-423-1796	171	1	5340-01-432-4877	182	15
2520-01-423-1947	139	1	3990-01-432-5370	199	19
2520-01-423-5120	136	6	5310-01-432-6727	153	3
5340-01-424-1300	138	2		155	14
	145	2		198	10
2540-01-424-7363	468			208	4
2540-01-425-1617	293	7		227	31
5340-01-426-3850	307	14		261	11
	308	2		321	15
4010-01-426-4536	458	39		325	17

CROSS-REFERENCE INDEXES

NATIONAL STOCK NUMBER INDEX

STOCK NUMBER	FIG.	ITEM	STOCK NUMBER	FIG.	ITEM
5310-01-432-6727	326	12	5306-01-437-8056	234	18
	332	2		239	13
	377	8	5306-01-437-8058	239	14
	486	4	5340-01-437-8751	182	12
	487	10	5365-01-438-1556	148	20
5306-01-432-7900	33	12	5340-01-438-4497	189	10
5340-01-432-8680	140	9	5980-01-438-7452	47	2
5340-01-432-8681	160	25	5980-01-438-8939	KITS	
	162	19	5310-01-439-1154	193	3
2540-01-432-9894	189	8	4730-01-439-2814	496	23
	190	8	2520-01-439-5265	115	20
2540-01-432-9899	189	11	5340-01-439-5636	497	3
5340-01-433-0936	484	16	2815-01-439-5881	1	2
5340-01-433-2721	190	5	2815-01-439-5882	1	2
5340-01-433-6262	198	16	2815-01-439-6665	1	1
2530-01-433-8003	151	19	2520-01-439-6830	KITS	65
9905-01-433-8554	354	6	2540-01-439-7308	21	21
2530-01-433-8702	143	19	4710-01-439-8165	125	4
	151	35	4710-01-439-8167	125	3
5305-01-433-9248	366	6	2590-01-439-8268	332	33
5365-01-434-0186	458	27		411	20
6105-01-434-1729	458	47	3120-01-440-0043	456	8
5340-01-434-1809	260	21	5940-01-440-0097	93	14
5340-01-434-2832	189	7	5962-01-440-0368	50	4
5340-01-434-2864	272	31	5340-01-440-1435	270	37
	272	31	5340-01-442-0308	125	21
4710-01-434-3037	160	21	5330-01-442-2874	KITS	96
4710-01-434-3151	160	19	5340-01-442-4876	86	33
	162	20	5940-01-442-6298	86	31
4710-01-434-3157	160	24	3020-01-442-7278	34	21
	162	23	2815-01-442-8077	1	2
4710-01-434-3159	162	21	5935-01-442-8569	86	22
6110-01-434-5562	458	36	6680-01-442-9413	45	19
5340-01-434-8109	160	17		478	1
	162	24		488	2
2540-01-434-8598	321		4720-01-442-9875	160	1
2540-01-434-8599	323		4720-01-443-3033	160	1
2540-01-434-8600	317			160	16
2540-01-434-8602	319		2530-01-443-3405	KITS	
5330-01-434-8611	30	2	4720-01-443-3481	162	9
3950-01-435-1014	458	31	5340-01-443-6908	88	33
3950-01-435-1632	458	28	4720-01-443-8487	162	25
3120-01-435-2495	458	34	5980-01-443-9093	63	8
3120-01-435-2560	458	30	5935-01-443-9124	86	29
2540-01-436-4175	231	6	5940-01-443-9580	95	4
	454	1	4730-01-444-0701	30	13
5940-01-436-4561	93	15	3020-01-444-1359	458	10
5120-01-437-0480	511	8	3020-01-444-1665	33	18
5120-01-437-3658	505	5	3040-01-444-1756	458	2
5325-01-437-4175	319	7	3020-01-444-2311	175	3

CROSS-REFERENCE INDEXES

NATIONAL STOCK NUMBER INDEX

STOCK NUMBER	FIG.	ITEM	STOCK NUMBER	FIG.	ITEM
2520-01-444-2711	120	5	5365-01-446-9408	128	22
2920-01-444-2749	38	11		130	25
5310-01-444-3084	77	16	4710-01-446-9570	11	1
2590-01-444-3317	33	9	5315-01-447-0492	108	4
3040-01-444-3350	456	13	5310-01-447-0968	108	3
2510-01-444-3360	16	20	2540-01-447-2236	332	14
2590-01-444-3399	456	14	5306-01-447-2568	33	13
3010-01-444-4018	458	11	2540-01-447-3457	231	9
3010-01-444-4019	458	14	3040-01-447-3797	107	7
3110-01-444-4020	458	7	2910-01-447-3911	16	13
3110-01-444-4100	458	13	5330-01-447-4762	103	3
2590-01-444-4365	37	16	5340-01-447-5839	78	3
	408	31	9905-01-447-7799	354	12
	475	19	3040-01-447-7995	108	2
2540-01-444-5340	332	20	3120-01-447-8658	458	21
3020-01-444-5447	38	8		458	33
3040-01-444-5640	51	11	3120-01-447-8663	458	18
4720-01-444-6433	332	11	5305-01-447-9227	332	31
2540-01-444-6615	332	19	5355-01-447-9655	98	4
2540-01-444-6642	332	30	2590-01-448-1105	315	7
2930-01-444-6649	31	3		457	12
2540-01-444-6655	332	22	5340-01-448-1213	488	8
6685-01-444-9478	30	1	5310-01-448-3219	332	32
7690-01-445-0444	456	2	5342-01-448-4215	104	18
7690-01-445-0456	361	11	5340-01-448-4245	472	13
4730-01-445-2358	30	15	5340-01-448-4316	278	2
6220-01-445-5058	49	11	5305-01-448-5074	458	17
5935-01-445-5144	86	32	5305-01-448-5080	458	22
5330-01-445-5285	458	4	3120-01-448-6268	456	12
5935-01-445-5599	86	30	3120-01-448-6269	456	9
4720-01-445-5690	332	10	2590-01-448-6351	456	7
4720-01-445-5705	332	41	3040-01-448-9611	104	2
2540-01-445-6029	379	17	9905-01-448-9783	355	4
5305-01-446-0767	38	16	9905-01-448-9784	355	4
	275	18	9905-01-448-9786	354	12
3040-01-446-3684	458	15	9905-01-449-0476	355	4
3040-01-446-3689	458	5	5306-01-449-0510	235	11
3020-01-446-3695	458	25	5305-01-449-1983	169	31
3020-01-446-4387	458	12	2530-01-449-2495	151	22
5330-01-446-4696	458	20	6150-01-449-5445	408	32
	458	32	2815-01-449-5585	4	6
9905-01-446-5768	355	4	5340-01-449-7352	332	16
9905-01-446-5769	354	12	5307-01-450-3072	180	9
9905-01-446-5770	354	12	2540-01-450-4015	319	1
9905-01-446-5771	355	4	2540-01-450-4017	316	1
5307-01-446-5930	103	14	2540-01-450-4018	316	4
2590-01-446-5957	458	19	2540-01-450-4019	320	1
2590-01-446-5962	458	16	2540-01-450-4020	322	1
9905-01-446-6187	355	4	2540-01-450-4021	316	1
5342-01-446-8954	36	3	2540-01-450-4022	319	

CROSS-REFERENCE INDEXES

NATIONAL STOCK NUMBER INDEX

STOCK NUMBER	FIG.	ITEM	STOCK NUMBER	FIG.	ITEM
2540-01-450-4024	322	1	5365-01-456-2032	151	30
2540-01-450-5477	320	2	2510-01-456-2277	194	3
2510-01-450-5479	316	7	2520-01-456-2736	114	6
	320	19	5315-01-456-2737	117	7
	324	24	5315-01-456-2738	117	7
2510-01-450-5480	316	7	5315-01-456-2739	117	7
	320	19	5315-01-456-2740	117	7
	324	24	5340-01-456-2741	117	19
7690-01-450-5481	354	12	5315-01-456-2743	117	7
2510-01-450-5482	320	5	5330-01-456-2744	120	10
	324	10	5340-01-456-2751	163	9
2510-01-450-5483	320	5	4720-01-456-2955	162	7
	324	10	5330-01-456-3884	142	11
5306-01-450-5947	230	14	2520-01-456-5014	115	6
	235	15	4730-01-456-5446	366	9
5340-01-450-7521	387	1	5315-01-456-6254	117	7
2540-01-450-7686	319	1	2520-01-456-6256	120	20
5340-01-450-8693	487	4	4820-01-456-6257	125	19
4720-01-451-0894	370	7	5305-01-456-6358	314	40
2540-01-451-1112	323		4720-01-456-6674	466	5
5340-01-451-5903	487	14	4720-01-456-6729	466	9
2540-01-451-9345	379	20	2590-01-456-7879	471A	
5330-01-452-2474	12	27	5930-01-456-7880	120	13
6150-01-452-3557	282	1	3040-01-456-7881	117	16
2540-01-452-5034	369	13	5315-01-456-7882	117	7
3030-01-452-6591	475	22	2520-01-456-7883	114	8
2520-01-452-7569	126	2	5330-01-456-7886	119	5
	127	3	2510-01-456-7889	268	3
2520-01-452-8365	126	1	5330-01-456-8823	143	20
4130-01-452-8773	466	KIT		151	20
3040-01-452-9065	129	8	5340-01-457-0459	205	16
2815-01-453-7403	1	1	4710-01-457-0590	467	10
2815-01-453-7404	1	1	4730-01-457-0727	160	7
4730-01-455-1220	467	3		161	7
4730-01-455-1231	466	3		162	8
	467	2	5340-01-457-0804	465	4
4730-01-455-1259	466	2	2530-01-457-1337	KITS	64
4730-01-455-1276	466	1	5340-01-457-1778	273	18
2920-01-455-1626	474		6150-01-457-2964	282	9
2920-01-455-1630	475		5310-01-457-3171	36	9
2910-01-455-3197	384	6		38	9
4820-01-455-5021	466	8		472	20
5340-01-455-8700	402			475	18
	445	1	5365-01-457-3364	277	13
2590-01-455-9123	332	13	5340-01-457-5571	277	11
2540-01-455-9308	332	18	5340-01-457-5734	44	8
2530-01-455-9330	KITS		5365-01-457-8947	273	24
4820-01-456-0172	19	23	3110-01-457-9711	277	9
5340-01-456-1500	98	9	2590-01-457-9922	277	32
5365-01-456-2032	143	30	3020-01-458-0176	33	5

CROSS-REFERENCE INDEXES

NATIONAL STOCK NUMBER INDEX

STOCK NUMBER	FIG.	ITEM	STOCK NUMBER	FIG.	ITEM
3020-01-458-0185	33	3	5360-01-460-9072	122	28
5305-01-458-1670	274	10	5360-01-460-9073	122	18
	274	23	5315-01-460-9907	108	11
	276	18	5325-01-460-9908	105	8
4720-01-458-3326	466	10	3040-01-460-9964	108	13
5330-01-458-3810	269	4	4810-01-460-9975	122	16
5340-01-458-6386	163	8	4820-01-460-9988	122	27
5340-01-458-7147	162	26	4820-01-460-9991	122	13
5340-01-458-7156	162	12	4820-01-461-0011	122	20
5340-01-458-8236	160	23	3020-01-461-0048	107	8
7690-01-458-8254	354	12	2520-01-461-0073	114	9
2520-01-459-0050	137	19	2520-01-461-0074	114	7
2530-01-459-0367	KITS		2520-01-461-0076	110	2
5342-01-459-4992	487	1	2520-01-461-0083	115	13
2530-01-459-5890	163	10	2520-01-461-0085	115	7
2520-01-459-8532	120	12	2520-01-461-0092	114	1
2530-01-459-9492	KITS	110	2520-01-461-0099	110	9
2530-01-459-9493	KITS	190		112	8
2530-01-459-9494	KITS	200	2520-01-461-0107	107	14
2530-01-459-9495	KITS	210	2920-01-461-1065	98	5
5305-01-459-9564	190	6	2540-01-461-1129	227	19
2530-01-460-2439	175	1	2540-01-461-1134	369	14
5355-01-460-4586	98	3		369	14
2520-01-460-4961	114	11	4820-01-461-1703	466	6
5340-01-460-5002	270	41	2520-01-461-2374	105	22
5340-01-460-5291	199	24	5306-01-461-3557	105	12
5340-01-460-5306	141	16	5305-01-461-4396	332	38
5935-01-460-5508	458	45	5360-01-461-4931	108	9
4730-01-460-5520	108	12	2520-01-461-5133	122	25
2930-01-460-7507	30	18	2520-01-461-5648	122	29
4820-01-460-8288	122	24	5315-01-461-5649	122	14
2520-01-460-8301	KITS		3120-01-461-6677	122	31
3010-01-460-8309	115	14	3120-01-461-6679	122	31
4710-01-460-8316	105	6	3120-01-461-6680	122	19
	105	6	2510-01-461-7075	462	KIT
	105	7	5325-01-461-7157	115	28
	108	14	5320-01-461-7924	273	11
2590-01-460-8320	233	7	5310-01-461-8043	227	48
	277	32	5315-01-461-8374	122	10
2520-01-460-8323	102	1	3020-01-462-1202	33	4
5325-01-460-8350	465	5	5310-01-462-2175	232	3
5340-01-460-8361	122	21	5331-01-462-7294	122	32
5340-01-460-8362	119	23	2530-01-462-8068	158	12
5340-01-460-8363	119	29	2530-01-462-8079	157	22
5340-01-460-8364	119	27		158	12
5330-01-460-8987	115	4	2540-01-463-0200	98	2
5330-01-460-8988	105	7	2540-01-463-3097	332	39
5360-01-460-9068	122	12	6110-01-463-9260	49	4
5360-01-460-9069	119	3	5315-01-464-0812	130	24
5360-01-460-9070	122	23	2520-01-464-1772	103	1

CROSS-REFERENCE INDEXES

NATIONAL STOCK NUMBER INDEX

STOCK NUMBER	FIG.	ITEM	STOCK NUMBER	FIG.	ITEM
2920-01-465-1096	KIT		5340-01-467-2127	282	11
2540-01-465-1197	231	19	5305-01-467-2711	486	1
5306-01-465-1564	137	3	5340-01-467-4153	486	7
5306-01-465-2140	105	19	6150-01-467-6716	41	1
3040-01-465-3178	156	11		472	5
5310-01-465-4525	33	7		474	10
	512	4	2540-01-467-8313	464	KIT
5307-01-465-5796	30	11	2540-01-467-8341	464	KIT
	472	17	2910-01-467-9029	10	2
2835-01-465-7620	379	19	5330-01-468-3604	115	1
2590-01-465-7756	463	5	5340-01-469-2979	16	15
2520-01-465-8809	122	9	5975-01-469-5558	76	21
2540-01-465-9030	463	13		472	9
5310-01-465-9727	463	19		475	5
4010-01-466-0849	462	7		476	6
5365-01-466-0850	463	15	5340-01-469-5774	487	7
2920-01-466-1855	476	7	5365-01-469-6343	332	37
5340-01-466-1978	462	5	6150-01-469-7930	480	31
5340-01-466-1982	463	10	6150-01-469-7941	480	34
5340-01-466-1985	485	19	5360-01-469-8077	120	22
5340-01-466-2425	463	18	7690-01-469-9591	466	4
5340-01-466-2438	485	18	7690-01-469-9596	467	6
5340-01-466-2451	485	11	2520-01-469-9893	126	1
5340-01-466-2468	480	6	5306-01-469-9903	120	3
5340-01-466-2606	485	20	5320-01-470-1545	197	16
5340-01-466-2611	485	22	5330-01-470-1922	116	14
5340-01-466-2620	480	11	6150-01-470-2009	78	1
3020-01-466-3603	476	10	6150-01-470-2011	78	1
2510-01-466-3752	182	11	6150-01-470-2016	78	1
2540-01-466-3770	463	16	5340-01-470-2069	332	28
2540-01-466-3849	463	4	4720-01-470-3076	178	23
5340-01-466-4086	463	20	6160-01-470-4172	198	3
2590-01-466-4397	468	2	5962-01-470-4619	50	4
5310-01-466-4852	462	10	5340-01-470-5892	198	16
2590-01-466-5095	462	12	5330-01-470-6543	120	4
7690-01-466-5217	468	3	6150-01-470-7014	480	12
5340-01-466-5243	374	4	5340-01-470-7135	198	4
2590-01-466-5250	468	6	5340-01-470-7160	198	6
3030-01-466-5387	476	26	2590-01-471-0236	12	16
2590-01-466-5447	479	2	2930-01-471-0622	28	5
2540-01-466-6114	462	1	5999-01-471-0710	482	7
2910-01-466-6264	468		5340-01-471-1040	485	12
5342-01-466-6276	476	5	5305-01-471-7623	485	21
5342-01-466-6280	476	14	3120-01-471-7844	122	31
5342-01-466-6283	476	24	9540-01-472-5874	88	48
6680-01-466-7238	103	8	5310-01-472-7368	270	10
	400	4	5330-01-472-8179	9	4
2590-01-466-7250	273	6	5340-01-472-8534	98	11
6150-01-466-7528	472	18	5340-01-472-8851	4	18
3030-01-466-9476	32	3	6150-01-473-1169	469	1

CROSS-REFERENCE INDEXES

NATIONAL STOCK NUMBER INDEX

STOCK NUMBER	FIG.	ITEM	STOCK NUMBER	FIG.	ITEM
6150-01-473-1174	470	5	5305-01-475-3154	276	13
6150-01-473-1178	469	3	2920-01-475-3180	40	19
5315-01-473-1590	462	6	5305-01-475-3364	276	17
2920-01-473-1763	36	11	5975-01-475-3442	227	46
5306-01-473-1895	33	10	5340-01-475-3650	469	8
3020-01-473-2048	36	8	4710-01-475-3753	469	7
2510-01-473-2309	202	1	4720-01-475-3757	470	1
6150-01-473-2435	81	14	4720-01-475-4641	470	2
5310-01-473-3373	143	8	2540-01-475-4708	227	51
	151	8	3940-01-475-4983	469	9
5315-01-473-3682	227	43	6150-01-475-8835	469	6
5340-01-473-4800	241	15	2520-01-475-9665	120	9
2520-01-473-5029	126	1	5340-01-476-0352	110	14
2540-01-473-6304	227	37	4730-01-476-0850	13	13
2540-01-473-7107	227	41		14	20
2540-01-473-7521	227	42	2510-01-476-2171	268	3
2540-01-473-7544	227	45	2540-01-476-2172	324	1
2540-01-473-7553	227	52	5360-01-476-2692	120	7
2540-01-473-7959	227	53	3020-01-476-2701	143	38
2540-01-473-8050	227	54		151	38
2510-01-473-8204	227	47	2920-01-476-2716	98	10
2540-01-473-8310	227	40	5340-01-476-2840	188	33
5330-01-473-8584	120	8	7690-01-476-2842	354	16
6150-01-473-8640	56	14	5340-01-476-2845	188	33
6150-01-473-8663	483	4	7690-01-476-2855	354	12
2540-01-473-9040	470	9	5340-01-476-2963	188	26
2540-01-473-9045	470	9	5340-01-476-2972	188	36
6680-01-474-0384	482	3	5306-01-476-3500	120	16
5340-01-474-0954	484	9	5306-01-476-3501	120	14
5305-01-474-0988	469	4	5330-01-476-3866	31	4
5340-01-474-3279	484	8	5340-01-476-4374	332	4
2590-01-474-3326	471	2	4720-01-476-4656	393	17
5340-01-474-4002	120	21	5340-01-476-5072	188	30
5340-01-474-4011	105	4	5340-01-476-5616	228	12
	125	22	7690-01-476-6089	354	4
5306-01-474-6117	120	18	7690-01-476-6101	354	7
2520-01-474-7051	KITS		5340-01-476-6182	250	12
2540-01-474-8562	332	36	5340-01-476-6205	250	11
5340-01-474-8830	463	22	5340-01-476-6243	188	21
2520-01-474-8868	114	12	5360-01-476-6291	117	6
4820-01-474-8911	KITS		7690-01-476-6507	354	8
5306-01-474-8959	119	10	7690-01-476-6510	354	10
4720-01-474-9148	332	7	3020-01-476-6520	175	4
6150-01-474-9676	482	4	5340-01-476-6587	250	8
2815-01-475-0825	4	9	5340-01-476-6612	282	11
7690-01-475-1197	482	1	5340-01-476-7263	433	
5330-01-475-1671	482	5	2540-01-476-7827	397	13
5305-01-475-3014	476	15	5330-01-476-9295	489	4
2540-01-475-3102	231	14	5310-01-476-9321	196	6
2540-01-475-3129	482	15	2540-01-476-9353	454	1

CROSS-REFERENCE INDEXES

NATIONAL STOCK NUMBER INDEX

STOCK NUMBER	FIG.	ITEM
5330-01-476-9732	180	22
2540-01-477-0162	454	2
2540-01-477-0184	454	2
2540-01-477-0242	397	14
5310-01-477-0828	156	3
5305-01-477-1867	180	25
5305-01-477-2824	225	38
5365-01-477-2843	227	33
2510-01-477-3949	180	3
2510-01-477-3968	180	24
5325-01-477-6608	122	22
5331-01-477-6762	122	32
5340-01-477-7052	122	11
4710-01-477-9032	120	15
5340-01-477-9397	463	5
3040-01-477-9645	456	11
5305-01-478-3387	469	12
5330-01-478-3900	114	14
5330-01-478-4797	117	18
5330-01-478-5993	120	10
5330-01-478-5994	114	13
2590-01-478-6799	181	17
5945-01-478-7862	119	24
5340-01-479-0211	227	38
2520-01-479-0847	114	8
3020-01-479-2069	112	13
5340-01-479-2514	117	18
5340-01-479-2517	117	17
5331-01-480-0748	115	26
5330-01-480-0750	114	15
5330-01-480-0752	KITS	
5330-01-480-2502	105	20
5310-01-480-4161	33	8
3110-01-480-5240	107	2
5365-01-480-5282	33	19
5305-01-480-5408	33	16
3040-01-480-7297	107	7
3020-01-480-7299	107	8
3020-01-480-7302	107	8
3040-01-480-7309	107	13
3020-01-480-7311	107	17
3020-01-480-7321	107	17
5325-01-480-7331	117	17
3040-01-480-7536	107	14
3040-01-480-7591	107	22
3040-01-480-7593	107	16
3040-01-480-7595	110	15
3010-01-480-7597	KITS	
3020-01-480-7630	107	17
3020-01-480-8698	33	17
5310-01-481-4029	291	5
	291	5
	297	8
	297	8
7690-01-481-4906	355	4
7690-01-481-4908	354	12
5355-01-481-5517	231	17
2520-01-481-6120	50	1
4730-01-481-6278	177	4
2520-01-481-7690	120	9
2520-01-481-8344	KITS	
2520-01-481-8460	KITS	
2520-01-481-8479	112	17

CROSS-REFERENCE INDEXES

PART NUMBER INDEX

CAGEC	PART NUMBER	STOCK NUMBER	FIG.	ITEM
58536	A-A-52406-4SA	5340-01-333-0162	346	3
17576	A-A-52506	4730-00-908-6294	368	20
58536	A-A-59432-08	4730-01-135-8310	148	30
41947	A-327	4730-00-949-8694	335	5
			336	3
11815	AAC-32	5320-01-362-6195	247	7
11815	AAP-610	5320-01-223-7728	298	7
58536	AA55569/01-009	5920-01-085-0825	52	13
			59	14
58536	AA5557/01-001		380	4
58536	AA55571/01-001	5925-01-430-2318	48	3
			469	13
58536	AA55571/02-001	5925-00-894-8015	50	10
11078	ADS43	5320-00-083-5009	52	9
			197	1
			208	6
			211	4
			296	12
			311	5
54402	AD42BS	5320-00-899-0981	213	29
			214	19
			270	16
			315	3
			337	12
54402	AD44BS	5320-01-023-2529	325	30
90030	AD45BS	5320-00-275-8344	337	7
21868	AD778-08B79	4720-00-111-5096	BULK	8
00624	AE208-10		BULK	76
72794	AJ7-40-CBC	5325-01-264-1522	207	3
78276	ALS4-1024-130	5325-01-411-0066	210	13
			225	48
			226	28
			269	7
			269	7
			460	4
78276	ALS4-1024-225		269	14
78278	ALS4-420-165	5310-01-411-3422	49	6
			352	1
			459	1
			484	11
78276	ALS4-518-150	5310-01-413-3276	225	32
			226	17
			461	1
24869	AM-4X2-B	4730-00-595-1078	399	9
68505	AMA-0045	5970-01-238-0146	43	28
19728	AMA-1014A		43	6
68505	AMA-1015AS	2920-01-205-8653	43	38
68505	AMA-1015SS		43	40
68505	AMA-1026AS	5970-01-214-7806	43	42
68505	AMA-1042AS	2920-01-168-4132	43	33
19728	AMA-1046A		43	29

CROSS-REFERENCE INDEXES

PART NUMBER INDEX

CAGEC	PART NUMBER	STOCK NUMBER	FIG.	ITEM
68505	AMA-1046AS	2920-01-205-8605	KITS	
19728	AMA-12		43	44
19728	AMA-19		43	43
19728	AMA-19S	2920-00-009-5213	KITS	
19728	AMA-20		43	59
19728	AMA-2028BS		43	51
		2920-01-212-5817	43	53
68505	AMA-2028B5	5330-01-215-5124	43	52
19728	AMA-3008		43	14
68505	AMA-48	5970-01-217-4566	43	41
19728	AMA-49		43	20
19728	AMA-5AS		43	15
19728	AMA-50		43	18
19728	AMA-66A		43	9
19728	AMA-74		43	3
19728	AMA-75		43	2
19728	AMA-90		43	11
68505	AMA-95	2920-01-212-5816	43	50
68505	AMA1096	5910-01-218-1675	43	46
0EDY1	AMA2004AS	2920-01-180-8666	43	23
87585	ANA9-5	5325-00-276-6228	489	6
88044	AN365-1024A	5310-00-208-1918	202	41
			205	38
			206	16
			243	28
			244	17
			248	5
			249	18
			249	42
			279	28
88044	AN5H10A	5306-00-182-2027	198	25
			199	44
			317	12
			376	19
88044	AN5H41	5306-00-292-8253	277	37
88044	AN5H6A	5306-00-182-2025	199	45
88044	AN5H7	5306-00-180-2748	321	32
88044	AN6-16A	5306-00-208-3639	279	12
88044	AN8008D6	5342-00-200-7564	307	4
			308	16
88044	AN8013-2	5310-00-167-0893	307	3
			308	14
			401	15
55719	AN8506-4	5120-00-184-8398	505	1
70485	AN931-10-14	5325-00-281-1557	333	10
88044	AN960-1216	5310-00-167-0826	404	7
88044	AN960-416L	5310-00-167-0835	279	3
88044	AN960-516L	5310-00-167-0836	279	18
88044	AN960-616	5310-00-167-0821	101	2
			382	9
88044	AN960-616L	5310-00-167-0837	279	11

CROSS-REFERENCE INDEXES

PART NUMBER INDEX

CAGEC	PART NUMBER	STOCK NUMBER	FIG.	ITEM
88044	AN960-816	5310-00-167-0823	199	21
			199	21
			199	21
			199	21
			245	25
			252	14
			429	35
96906	AS3582-030		406	5
78276	ATS2-813	5325-01-409-0211	127	8
78225	AX2022-02	2590-01-196-5228	4	1
24975	A010095461	5977-01-270-1466	39	66
22075	A02-08052	5310-01-186-5420	156	13
35510	A022096282	2920-01-310-9973	39	28
22075	A03-002204	5310-01-477-0828	156	3
35510	A040096267	2920-01-199-2394	404	11
35510	A040096268	2920-01-199-2395	404	10
68505	A051074806	5961-01-260-5135	406	25
78276	A1A1-1024-225	5325-01-460-8350	465	5
03481	A10-116	5310-00-964-7092	215	4
89326	A22506-4	5310-00-809-4058	42	7
10988	A27365	5331-00-451-0118	128	51
80063	A3046166	5985-01-215-9404	410	6
			414	5
			428	5
03481	A31-125	5310-00-952-3567	374	12
80063	A3157855	5340-01-467-4153	486	7
55469	A34	4730-00-278-3828	17	5
58536	A52425-1	5940-00-549-6581	69	15
58536	A52432-1	2540-00-840-0022	328	12
58536	A52463-2-10	6240-00-044-6914	60	7
			61	7
			62	3
			64	11
58536	A52972-1		368	30
53964	A609014	5310-00-809-4058	19	4
53964	A609015	5306-01-190-4553	19	3
53964	A618017	5331-01-335-7592	19	8
53964	A630003	2910-01-218-4489	KITS	
35510	A777100841		39	63
96152	A82-1	5315-00-839-2325	21	19
			21	29
53964	A910044	4330-01-190-3579	KITS	
33116	A98-09439	2530-01-206-3874	KITS	
20669	B-6	2540-01-189-2193	191	6
81205	BACG20AF8H1	5325-00-276-6051	96	21
81205	BACT14A6	4030-00-641-3921	275	11
11815	BALM-6BP-14	5320-01-254-2283	208	37
			332	40
11815	BAPKTR-64	5320-01-275-1998	64	2
			197	14
			199	53

CROSS-REFERENCE INDEXES

PART NUMBER INDEX

CAGEC	PART NUMBER	STOCK NUMBER	FIG.	ITEM
11815	BAPKTR-64	5320-01-275-1998	212	21
			332	12
			379	27
72794	BJR7-1.00	5325-01-191-7555	208	22
72794	BJR7-90	5325-01-255-1126	235	6
31272	BLC5LA13S	5315-00-765-2190	279	19
55509	BM2337	3110-00-100-5920	150	22
4A439	BN252	4730-01-357-6523	385	5
99017	BPF-3-1/2	5340-01-194-0887	270	7
			340	5
99017	BPF-3/8-3	5340-01-194-0888	270	27
13940	BS 78505	5325-00-371-8108	224	12
			316	2
			316	6
			319	3
			322	3
			324	3
61864	BS-78403	5325-00-281-8643	224	13
33287	BT-33-73F	6635-01-093-3710	499	1
73821	B0625-022-S	5310-01-203-3230	273	9
80204	B1821BH025C050N	5305-00-071-2506	25	1
			28	8
			55	12
			103	4
			156	16
			365	13
			365	26
			368	24
			375	30
			496	13
80204	B1821BH025C063N	5305-00-068-7837	28	8
			46	25
			155	11
			177	10
			178	2
			197	30
			199	42
			210	3
			274	8
			276	1
80204	B1821BH025C075N	5305-00-068-0508	17	10
			27	10
			29	6
			46	23
			88	50
			208	2
			233	6
			233	6
			241	12
			243	13
			252	3

CROSS-REFERENCE INDEXES

PART NUMBER INDEX

CAGEC	PART NUMBER	STOCK NUMBER	FIG.	ITEM
80204	B1821BH025C075N	5305-00-068-0508	252	3
			269	33
			270	28
			275	5
			287	12
			327	47
			331	35
			332	5
			365	4
			368	40
			399	21
			407	41
			468	5
			478	4
			481	6
			485	10
			498	8
80204	B1821BH025C088N	5305-00-071-2505	80	13
			99	6
			202	16
			209	6
			245	37
			247	15
			280	54
			281	54
			311	4
			325	13
			326	13
80204	B1821BH025C100N	5305-00-225-3843	21	17
			42	6
			95	42
			153	5
			169	10
			169	30
			203	1
			203	26
			204	1
			227	28
			247	1
			249	2
			250	5
			252	12
			254	13
			266	21
			267	5
			277	23
			285	14
			286	37
			292	11
			312	1
			334	6

CROSS-REFERENCE INDEXES

PART NUMBER INDEX

CAGEC	PART NUMBER	STOCK NUMBER	FIG.	ITEM
80204	B1821BH025C100N	5305-00-225-3843	339	28
			343	18
			352	3
			366	17
			368	34
			408	22
			417	3
			430	42
			459	3
			475	6
			484	14
			486	12
			492	15
			494	11
80204	B1821BH025C113N	5305-00-225-3842	5	16
			202	10
			203	5
			204	5
			308	9
			430	16
80204	B1821BH025C125N	5305-00-068-0509	49	7
			249	38
			251	28
			252	11
			270	8
			285	3
			288	24
			288	32
			321	11
			398	10
			425	3
			426	10
			427	4
			487	9
80204	B1821BH025C150N	5305-00-071-2509	246	35
			246	35
			248	27
			249	20
			252	10
			253	13
			253	20
			255	19
			289	9
			389	11
80204	B1821BH025C175N	5305-00-071-2510	153	11
			211	11
			212	7
			225	41
			246	29
			246	38
			249	9

CROSS-REFERENCE INDEXES

PART NUMBER INDEX

CAGEC	PART NUMBER	STOCK NUMBER	FIG.	ITEM
80204	B1821BH025C175N	5305-00-071-2510	484	10
80204	B1821BH025C225N	5305-00-071-2512	248	20
			293	26
80204	B1821BH025C250N	5305-00-071-2513	248	25
			249	36
80204	B1821BH025C275N	5305-00-071-2514	251	10
			251	10
80204	B1821BH025C450N	5305-01-202-2676	155	16
80204	B1821BH025F050N	5305-00-267-8952	387	7
80204	B1821BH025F063N	5305-00-267-8953	279	2
			388	12
		5305-01-384-6279	407	32
		5305-00-267-8953	485	15
80204	B1821BH025F075N		68	6
		5306-00-068-0513	388	15
80204	B1821BH025F088N	5306-00-068-0514	379	13
80204	B1821BH025F100N	5305-00-068-0515	64	22
			379	52
			387	17
			393	9
80204	B1821BH025F125N	5305-00-267-8954	228	15
80204	B1821BH031C056N	5306-00-226-4823	143	36
			151	36
80204	B1821BH031C063N	5306-00-226-4824	273	19
			407	14
			488	24
80204	B1821BH031C075N	5306-00-226-4825	19	20
			100	17
			116	18
			230	26
			234	6
			234	6
			480	3
			487	16
80204	B1821BH031C088N	5306-00-226-4826	230	19
			231	12
			273	7
			277	7
			328	8
80204	B1821BH031C100N	5306-00-226-4827	41	21
			83	30
			204	6
			225	29
			226	14
			242	10
			287	20
			329	18
			473	1
			474	7
80204	B1821BH031C113N	5306-00-226-4828	160	13
			162	14

CROSS-REFERENCE INDEXES

PART NUMBER INDEX

CAGEC	PART NUMBER	STOCK NUMBER	FIG.	ITEM
80204	B1821BH031C113N	5306-00-226-4828	225	2
			226	13
			284	1
			288	26
			292	13
			340	1
			346	1
			363	23
			374	22
			417	4
			418	7
			419	8
			420	5
			421	7
			422	9
			423	3
80204	B1821BH031C125N	5306-00-226-4829	144	12
			152	12
			211	31
			212	29
			225	26
			226	8
			328	2
			390	6
			417	7
			423	7
			432	2
			461	8
80204	B1821BH031C150N	5305-00-226-4831	121	9
			242	2
			269	20
			279	35
			288	23
80204	B1821BH031C175N	5306-00-226-4832	121	8
80204	B1821BH031C200N	5306-00-226-4833	211	15
			212	11
			242	4
			377	15
80204	B1821BH031C250N	5306-00-226-4835	209	16
			338	24
			429	5
80204	B1821BH031C325N	5306-00-226-4838	189	3
80204	B1821BH031F075N	5306-00-050-1238	433	9
80204	B1821BH031F088N	5305-01-407-9487	199	6
80204	B1821BH031F100N	5305-00-051-4076	324	7
			378	30
80204	B1821BH031F113N	5306-00-051-4077	266	4
			321	29
			321	34
			325	29
			413	11

CROSS-REFERENCE INDEXES

PART NUMBER INDEX

CAGEC	PART NUMBER	STOCK NUMBER	FIG.	ITEM
80204	B1821BH031F113N	5306-00-051-4077	415	5
80204	B1821BH038C075N	5305-00-543-4372	60	1
			61	1
			240	6
			332	35
80204	B1821BH038C088N	5305-01-140-9118	175	7
			272	24
80204	B1821BH038C100D	5305-00-942-2196	456	22
80204	B1821BH038C100L	5306-01-114-0963	37	1
			408	3
			475	29
			476	4
80204	B1821BH038C100N	5305-00-068-0510	2	6
			15	30
			16	19
			23	18
			24	26
			35	2
			37	2
			142	15
			150	15
			174	13
			175	6
			245	21
			274	27
			275	1
			276	24
			277	47
			286	30
			408	5
			463	6
			463	6
			464	3
			476	1
80204	B1821BH038C113N	5305-00-543-2419	1	6
			2	2
			23	8
			251	43
			329	1
			341	1
			425	14
			463	1
80204	B1821BH038C125N	5305-00-068-0511	24	8
			138	16
			139	14
			145	16
			146	14
			189	9
			190	7
			266	18
			272	33

CROSS-REFERENCE INDEXES

PART NUMBER INDEX

CAGEC	PART NUMBER	STOCK NUMBER	FIG.	ITEM
80204	B1821BH038C125N	5305-00-068-0511	272	33
			283	6
			431	2
			462	2
80204	B1821BH038C138N	5305-00-688-2111	103	13
			144	16
			152	16
80204	B1821BH038C150N	5305-00-725-2317	36	16
			205	20
			245	23
			270	9
			270	13
			270	30
			272	34
			273	3
			274	26
			275	22
			277	12
			286	34
			463	21
			490	1
80204	B1821BH038C175N	5305-00-821-3869	23	23
			24	27
			251	26
			251	44
			272	27
			285	4
			414	2
			470	14
			471	6
			486	8
80204	B1821BH038C200N	5305-00-782-9489	23	14
			24	22
			202	35
			272	38
			273	4
			274	13
			398	22
			412	4
			428	3
			490	3
80204	B1821BH038C225N	5305-00-638-8920	341	9
80204	B1821BH038C250N	5305-00-543-2866	272	34
			273	5
			274	26
			275	21
			276	23
80204	B1821BH038C275N	5305-00-781-3926	1	5
			272	23
			272	35
			272	38

CROSS-REFERENCE INDEXES

PART NUMBER INDEX

CAGEC	PART NUMBER	STOCK NUMBER	FIG.	ITEM
80204	B1821BH038C275N	5305-00-781-3926	273	1
			273	4
			274	25
			275	3
			277	12
			286	32
80204	B1821BH038C300N	5305-00-846-5703	268	17
			272	27
			274	12
			277	48
80204	B1821BH038C350N	5305-00-781-3927	277	31
			288	10
80204	B1821BH038C375N	5305-00-990-8632	273	1
			274	25
			276	22
			277	31
80204	B1821BH038C400N	5305-00-781-3928	274	12
			274	23
			277	31
			288	6
80204	B1821BH038C450N	5305-00-857-6886	274	10
			276	12
			277	1
80204	B1821BH038C475N	5305-00-781-3930	170	21
			275	14
80204	B1821BH038C550N	5305-01-458-1670	274	10
			274	23
			276	18
80204	B1821BH038C575N	5305-01-446-0767	38	16
			275	18
80204	B1821BH038C600N	5305-01-386-9052	431	8
80204	B1821BH038C700N	5305-01-475-3154	276	13
80204	B1821BH038C750N	5305-01-475-3364	276	17
80204	B1821BH038F063N	5305-00-269-3233	363	10
80204	B1821BH038F200N	5305-00-269-3242	390	15
80204	B1821BH044C100N	5305-00-071-1786	136	5
			151	42
80204	B1821BH044C125N	5305-00-071-1788	425	5
			426	8
			427	6
80204	B1821BH044C150N	5305-00-071-2055	35	17
			152	16
80204	B1821BH044C175N	5305-00-071-2056	389	3
			393	3
80204	B1821BH044C200N	5305-00-071-2057	37	21
			42	5
			462	13
80204	B1821BH044C250N	5305-00-071-2059	37	9
			42	5
			408	14
80204	B1821BH044F975N	5305-01-429-9149	36	1

CROSS-REFERENCE INDEXES

PART NUMBER INDEX

CAGEC	PART NUMBER	STOCK NUMBER	FIG.	ITEM
80204	B1821BH044F975N	5305-01-429-9149	38	1
			472	10
			475	10
80204	B1821BH050C100N	5305-00-071-2066	140	5
			140	11
			147	9
			182	13
			183	19
			296	4
80204	B1821BH050C113N	5305-00-732-0511	103	18
			363	21
80204	B1821BH050C125D	5305-00-915-8087	2	14
			156	22
80204	B1821BH050C125N	5305-00-071-2067	140	11
			142	16
			147	5
			150	16
			151	16
			179	17
			180	27
			182	20
			184	7
			237	9
			429	34
			456	6
80204	B1821BH050C150N	5305-00-071-2069	142	34
			174	8
			183	9
			187	14
			209	15
			315	8
			363	27
			408	16
			456	23
80204	B1821BH050C175N	5305-00-071-2070	127	4
			181	8
			186	13
			242	6
			245	24
			429	38
			456	24
80204	B1821BH050C200N	5305-00-071-2071	26	12
			185	10
			252	13
			285	6
			295	8
			455	2
			456	5
80204	B1821BH050C225N	5305-00-071-2072	283	4
80204	B1821BH050C250N	5305-00-071-2073	188	24
			191	5

CROSS-REFERENCE INDEXES

PART NUMBER INDEX

CAGEC	PART NUMBER	STOCK NUMBER	FIG.	ITEM
80204	B1821BH050C275N	5305-00-071-2074	33	1
			182	18
			183	18
80204	B1821BH050C300N	5305-00-071-2075	182	14
			188	6
80204	B1821BH050C325N	5305-00-071-2076	147	9
			182	8
			182	16
			188	9
80204	B1821BH050C375N	5305-00-071-2078	181	7
			184	4
			188	1
80204	B1821BH050C400N	5305-00-071-2079	181	3
			182	8
80204	B1821BH050C425N	5305-00-071-1783	188	22
80204	B1821BH050C450N	5305-00-071-2081	2	11
			179	13
			180	18
			184	17
80204	B1821BH050C475N	5305-00-071-2082	179	6
			180	7
80204	B1821BH050C500N	5305-00-071-2083	363	16
80204	B1821BH050C775N	5305-01-480-5408	33	16
80204	B1821BH050F150N	5305-00-719-5221	390	2
80204	B1821BH056C150N	5305-00-716-7680	180	14
80204	B1821BH056F950N	5305-01-475-3014	476	15
80204	B1821BH063C125N	5305-00-724-7219	140	8
			147	8
80204	B1821BH063C150N	5305-00-724-7220	140	10
			147	11
			157	21
			158	14
80204	B1821BH063C200N	5305-00-724-7222	462	15
80204	B1821BH063C300N	5305-00-724-7228	194	8
80204	B1821BH063C350N	5305-00-724-7247	185	3
80204	B1821BH063C375N	5305-00-724-7248	186	4
			196	1
			457	18
80204	B1821BH063C400N	5305-00-724-7254	186	3
			196	1
			196	12
			470	8
80204	B1821BH063C425N	5305-00-724-7263	196	16
80204	B1821BH063C450N	5305-00-724-7264	196	12
			196	16
80204	B1821BH075C325N	5305-00-947-4355	183	17
80204	B1821BH075C400N	5305-00-947-4358	181	10
			182	6
80204	B1821BH075C425N	5305-00-947-4359	183	8
80204	B1821BH075C450N	5305-00-947-4360	183	16
			184	13

CROSS-REFERENCE INDEXES

PART NUMBER INDEX

CAGEC	PART NUMBER	STOCK NUMBER	FIG.	ITEM
80204	B1821BH075C475N	5305-00-947-4361	144	1
			152	1
			195	2
80204	B1821BH075C500N	5305-00-947-4362	144	22
80204	B1821BH075C550N	5305-00-947-4363	471	4
80204	B18231B10020NF	5305-01-390-0547	484	4
80204	B18241B100F	5310-01-395-8747	30	9
			36	20
			37	15
			38	20
			41	8
		5310-01-366-3539	42	11
			77	8
		5310-01-395-8747	472	1
			474	5
			475	13
			476	21
			490	8
80204	B1828BH044C150N		144	16
28527	B2099690G1	5331-00-185-0075	496	14
81349	B47287-II-1/2	9330-01-252-1239	BULK	78
			BULK	95
81349	B47287-II-1/2-27		162	15
81349	B47287-II-1/2-3		13	12
			14	19
81361	B5-19-1676-1	4730-00-808-5090	311	13
			312	9
81361	B5-19-1829	4240-00-007-9453	311	10
			312	6
88907	B54-32780	4730-00-278-2523	385	4
72962	B79NM-50	5310-01-299-6460	327	4
78553	C-14329-8A04	5310-01-273-1635	64	20
82484	C-1703	5340-01-211-5593	327	9
98349	C-205-TEZ-35	2530-01-188-3685	144	8
			152	8
80604	C-4171	5120-01-026-1666	511	9
78553	C-8036-832	5310-01-272-5464	300	10
98410	C-828-10	5940-00-143-4794	72	10
98410	C-840-38	5940-00-113-9826	86	34
71468	CA121003-3	5935-01-460-5508	458	45
71468	CA3106E28-21S-B-F80	5935-01-397-0201	86	28
28818	CF40BH52	2590-01-312-7355	BULK	47
28818	CF40BH52 AS REQ.		427	24
81348	CMDX2-3PT573036	5340-00-809-1492	77	4
			83	5
			84	29
			88	13
			96	22
			125	12
			315	10

CROSS-REFERENCE INDEXES

PART NUMBER INDEX

CAGEC	PART NUMBER	STOCK NUMBER	FIG.	ITEM
81348	CMDX2-3PT573036	5340-00-809-1492	478	2
75272	COV-0909	5340-00-385-8820	17	9
			27	11
75272	COV-1109Z1	5340-01-153-9425	177	14
75272	COV-1309	5340-01-101-8262	18	2
75272	COV-1609	5340-01-229-3632	5	5
75272	COV-3311	5340-01-210-0692	17	16
75272	COVO7O9Z1	5340-01-071-2047	18	12
78500	CPL6N8	2520-00-352-2168	169	29
19207	CPR104420-1	4720-01-058-7213	BULK	69
19207	CPR104420-1-17		135	1
34623	CPR104420-1-26		12	6
19207	CPR104420-1-28		12	6
19207	CPR104420-1-4		141	4
			457	3
19207	CPR104420-1-70		313	6
			457	1
19207	CPR104420-2	4720-01-014-4915	BULK	71
63769	CR 535094-60	5330-01-203-6551	142	2
			150	2
			151	2
11815	CR-212-6-4	5320-01-136-1785	219	4
			287	14
			290	8
11815	CR-212-6-5	5320-01-273-0020	287	15
11815	CR-213-4-2	5320-01-258-2576	208	12
11815	CR-213-4-4	5320-01-220-0596	208	10
			220	1
			230	24
			231	29
11815	CR-213-4-5	5320-01-259-7423	226	2
			237	5
11815	CR-213-6-2	5320-01-143-5075	213	36
			214	29
11815	CR-213-6-3	5320-01-135-7319	211	3
			213	37
			214	30
			218	1
			219	1
			237	17
			292	5
			365	1
11815	CR-213-6-5	5320-01-084-9235	224	15
			287	3
11815	CR-213-6-6	5320-01-084-9234	258	9
			259	1
			260	17
11815	CR-213-6-8	5320-01-273-4601	224	10
			294	8
11815	CR-3213-6-5	5320-01-084-9235	212	8
11815	CR-3213-6-6	5320-01-084-9234	211	24

CROSS-REFERENCE INDEXES

PART NUMBER INDEX

CAGEC	PART NUMBER	STOCK NUMBER	FIG.	ITEM
06090	CRN1RED	5970-00-827-6566	44	14
			313	14
60380	CRS22CP	3110-00-162-3766	286	12
07860	CR21452		392	6
11815	CR3212-6-3	5320-01-084-6101	197	26
			199	37
			290	10
11815	CR3212-6-5	5320-01-136-1787	288	3
11815	CR3212-6-7	5320-01-086-1147	287	16
11815	CR3213-4-3		219	10
			235	4
			235	18
11815	CR3213-6-06	5320-01-084-9234	212	23
11815	CR3213-6-1	5320-01-085-1755	211	23
11815	CR3213-6-2	5320-01-143-5075	197	27
			199	35
			220	6
			300	15
11815	CR3213-6-3	5320-01-135-7319	197	11
			199	15
			227	39
11815	CR3213-6-4	5320-01-136-1782	197	8
			197	8
			199	17
			199	17
			212	9
			287	1
			289	6
11815	CR3213-6-5	5320-01-084-9235	197	24
			199	38
11815	CR3213-6-7	5320-01-085-9995	197	19
			199	20
			287	28
11815	CR3213-6-9	5320-01-086-1143	197	10
			199	16
11815	CR3242-6-2	5320-01-033-8643	205	19
11815	CR3242-6-4	5320-01-033-9126	208	35
11815	CR3243-6-3	5320-01-033-8638	208	39
11815	CR3243-6-4	5320-01-033-8637	208	23
11815	CR3243-6-5	5320-01-034-1884	321	24
			376	22
16236	CS-4520-SV-0705	4520-00-217-5782	345	30
			348	29
7Z588	CT250L	4730-01-329-9151	29	11
75272	CWV-0407	5340-01-215-5478	333	30
75272	C0V0709Z1	5340-01-071-2047	124	12
70472	C0360-045-1250S	5360-01-118-5907	274	3
73821	C0720-081-1500S	5360-01-218-1608	286	3
73821	C0850-081-2250-M	5360-01-255-9899	205	30
30327	C110-10	4720-00-241-4435	BULK	24
78553	C183-012-4	5310-01-213-1333	269	21

CROSS-REFERENCE INDEXES

PART NUMBER INDEX

CAGEC	PART NUMBER	STOCK NUMBER	FIG.	ITEM
81349	C3030	5325-00-184-9846	89	16
			368	10
66295	C32P	4730-00-204-3491	29	1
			177	6
08627	C3254	5340-01-209-7808	149	13
08627	C3263	5340-01-215-9170	141	12
16004	C43974		BULK	2
78553	C46021-1024A-1	5310-01-186-3483	222	13
57958	C5136336	5340-01-308-2168	482	20
57958	C5136338	5330-01-309-4340	482	16
57958	C5136341	4010-01-308-9168	482	6
57958	C5136342	5340-01-308-3851	484	3
57958	C5136359	2590-01-307-9303	468	14
78553	C596-1024-24	5310-01-275-1189	222	14
66295	C72P	4730-00-359-9487	12	4
			398	31
72800	C7685-10A	5310-01-194-7066	199	56
			208	7
			331	34
78563	C7740-1420	5310-01-253-6439	203	14
78553	C8117-1024	5310-01-215-5356	199	31
			331	18
			347	7
62161	D-528240	4310-01-345-5723	505	
84760	DB2829-4523	2910-01-199-2355	10	2
84760	DB2829-4879	2910-01-326-9221	10	2
84760	DB2831-5149	2910-01-414-1272	10	2
84760	DB2831-5209	2910-01-467-9029	10	2
93061	DC603-2	4820-00-752-9040	29	9
5A910	DC8218	6220-01-107-2613	62	2
34904	DC8226	5330-01-076-6172	62	10
13873	DGSCV-91-157	6220-01-128-0087	62	4
1FH08	DIN933M10X20	5306-01-158-9917	12	22
02126	DR-T10X3/4	5305-01-006-5736	303	11
68505	DRA-3002D	2920-01-187-1310	45	8
33116	D00-09102	2530-01-174-7441	156	1
64878	D100-MIL-1	5180-01-201-4978	504	10
24866	D12604	2540-01-184-5503	327	23
81346	D1785		BULK	48
81361	D5-19-1754	4240-00-565-6059	307	2
			308	8
81361	D5-19-2350	4240-00-828-3952	308	3
81361	D5-19-2353	4240-01-026-3112	307	1
			308	7
62161	D528235-H1	2640-01-419-6200	167	27
62161	D5701	2640-01-419-6202	167	17
34623	EC-RCSK1834-3-1	5340-01-412-3563	105	25
19207	EC12339050		136	13
		5306-01-465-1564	137	3
02978	ERNA245	5310-00-584-5272	69	2
			103	19

CROSS-REFERENCE INDEXES

PART NUMBER INDEX

CAGEC	PART NUMBER	STOCK NUMBER	FIG.	ITEM
02978	ERNA245	5310-00-584-5272	174	7
			240	2
			240	12
			271	16
			271	28
			277	39
			453	2
34623	ET029	4720-01-185-6673	BULK	22
			BULK	31
34623	EX4228-1	5340-01-432-8681	160	25
			162	19
34623	EX4228-2	5340-01-434-8109	160	17
			162	24
34623	EX4231-3	4710-01-434-3151	160	19
			162	20
34623	EX4231-4	4710-01-434-3157	160	24
			162	23
34623	EX4233	4710-01-434-3037	160	21
34623	EX4234	4710-01-434-3159	162	21
34623	EX4717-1	5340-01-458-7156	162	12
34623	EX4717-2	5340-01-458-7147	162	26
34623	EX4718	5340-01-458-8236	160	23
34623	EX4786-4	4720-01-456-2955	162	7
34623	EX4939	5340-01-457-5734	44	8
34623	EX5061	7690-01-476-2855	354	12
34623	EX5062		355	4
19207	EX5063		180	1
34623	EX5079	7690-01-476-2842	354	16
70308	E06879-00	2540-01-203-0183	230	18
			235	10
23040	E1F79B076-B	5325-01-210-2870	15	5
			16	5
01568	E1000-105-3500M	5360-01-255-2808	243	33
10988	E114347	3110-00-554-3246	407	4
30327	E14A	4730-00-254-6211	334	9
7X868	E19250-00	2540-01-315-3358	234	2
81361	E5-19-1782	4240-00-807-6856	311	7
			312	3
78940	F-6D9K090B	2940-01-189-1809	12	3
55719	FAM7E	5120-01-437-3658	505	5
01276	FB9665-02	4720-01-257-3705	5	11
16717	FB9778-01	4720-01-213-1574	178	5
55719	FC18B	5120-01-335-1094	505	1
55719	FC22A	5120-01-335-1096	505	1
55719	FC28B	5120-01-335-1099	505	1
55719	FC30B	5120-01-335-1100	505	1
01276	FF9311-36	4730-00-909-8627	379	34
16632	FLX400132057600	4720-01-299-8469	337	20
95760	FP-161	5340-01-274-7337	258	1
			259	9
55719	FTX40E	5120-01-367-3536	510	8

CROSS-REFERENCE INDEXES

PART NUMBER INDEX

CAGEC	PART NUMBER	STOCK NUMBER	FIG.	ITEM
2K880	FVS121		505	18
29944	F07011	2540-01-315-3143	234	2
			239	1
55787	F2802	5340-01-236-2112	268	38
55787	F2823	5340-01-188-7393	268	38
55787	F2824	5360-01-188-5083	268	33
27182	F35SRBXXBZXX	5340-01-271-6461	296	11
34623	G-00271166	5310-01-251-0760	62	13
34623	G-00271482	5310-01-272-1356	56	4
34623	G-11500829	5306-01-254-2357	174	10
34623	G-11501940	5306-01-251-9190	75	47
			174	4
75535	G-408-3/8	4030-01-256-0471	314	19
			458	40
09527	GG0490	6685-01-180-9037	47	9
09527	GG0552	6620-01-181-1757	47	11
72794	GH7	5325-01-266-8414	207	2
			208	20
19728	GK-174A		45	39
7X677	GM-6165-M		BULK	13
7X677	GM8670757	5306-01-150-4835	104	4
81348	GP3STYLXTYRACLO/ O/37-12.50R16.50		168	1
82484	GS-2176	3040-01-210-6943	327	1
34623	G0045696	5305-01-272-9034	339	23
92871	G121224	5315-01-206-7135	293	34
34623	G167084	5305-01-139-4293	225	9
			325	1
79497	G1895	5325-00-281-1557	367	10
34623	G45637	5315-01-218-1114	245	40
57733	G488213	2540-00-039-8258	56	13
78385	G704177	2540-01-165-8175	345	31
			348	25
78385	G704183	5935-01-163-8981	348	2
78385	G704213		348	9
78385	G704232	2540-01-165-0465	345	19
			348	19
78385	G704234	5935-01-163-8987	348	8
78385	G704284		350	2
		2540-01-165-0814	351	1
78385	G704288-1	2540-01-165-8176	345	29
			348	31
78385	G704293	5340-01-165-0745	348	30
78385	G704373	6150-01-165-4667	345	26
			348	24
78385	G704554	2540-01-008-1501	348	26
78385	G706014	2540-01-289-8328	345	28
78385	G706016	2540-01-253-6112	349	16
78385	G706024		349	14
78385	G706026	6150-01-293-4074	349	6
78385	G706033	5340-01-290-6331	345	3

CROSS-REFERENCE INDEXES

PART NUMBER INDEX

CAGEC	PART NUMBER	STOCK NUMBER	FIG.	ITEM
78385	G706034		345	16
78385	G706035	2540-01-289-8329	345	39
78385	G706037		348	35
78385	G706039		350	11
78385	G706052-13	6150-01-287-9925	349	1
78385	G706052-15	6150-01-287-9924	349	2
78385	G706052-17	6150-01-287-9926	349	13
78385	G706052-19	6150-01-287-9923	349	10
78385	G706052-21	6150-01-287-9917	345	43
78385	G706052-25	6150-01-287-9918	345	9
78385	G706052-9	6150-01-291-4809	345	41
78385	G706055	4520-01-284-7099	345	22
78385	G706057	6110-01-285-3902	349	9
78385	G706064		345	2
92871	G9426241	5305-01-206-7219	13	8
			14	15
			17	13
			88	35
54979	HC-9.56	4010-01-203-0411	243	17
78947	HS49745	5340-01-195-8837	269	22
78947	HS49746	5340-01-196-8158	269	23
83058	HS99338	5340-01-198-2241	280	8
			281	8
83058	HS99417	5340-01-198-2240	280	8
			281	8
7Z588	HTM-1200	4730-01-210-5785	12	35
21102	HV032504	2540-01-282-8562	300	16
21002	HV033596	5905-01-270-0966	342	3
21102	HV034186	2540-01-276-5935	224	7
76599	H12SS	4730-00-908-3194	268	32
81718	H2525M	5310-00-637-9541	89	7
			401	12
76599	H68SS	4730-01-189-0871	12	7
24825	I F-5	2510-01-250-7594	227	26
76385	IC006197	5330-01-311-7953	BULK	61
			BULK	91
24825	IF-3	2510-01-250-7595	227	25
55883	IPD8S5128		45	27
25341	J-21362	4910-01-178-6551	511	7
25341	J-21370	4910-01-178-0722	500	3
33287	J-21370-10	5120-01-423-0032	510	2
33287	J-21552	5120-01-179-1032	503	8
33287	J-21777-43	5120-01-366-9468	512	3
25341	J-23327	4910-01-178-0724	510	1
60380	J-2416	3110-01-155-4440	130	38
33287	J-25018-A	5120-01-410-8216	510	4
25341	J-29162	4910-01-179-5530	502	3
25341	J-29168	5120-01-169-4876	501	2
25341	J-29642-C	5180-01-267-2907	509	1
25341	J-33043	4820-01-179-4869	511	15
33287	J-33149-A	5120-01-218-8235	502	5

CROSS-REFERENCE INDEXES

PART NUMBER INDEX

CAGEC	PART NUMBER	STOCK NUMBER	FIG.	ITEM
33287	J-33826	5120-01-357-3633	501	15
33287	J-33829	5120-01-357-3629	501	16
33287	J-33831	5120-01-357-3632	501	12
33287	J-33832		511	10
33287	J-33833	5120-01-357-3630	501	17
33287	J-33839	5120-01-357-3631	501	18
33287	J-33843	5120-01-361-3101	501	14
33287	J-34175-4	5120-01-366-0894	512	9
33287	J-35158		505	1
33287	J-35209	4730-01-042-5266	505	17
33287	J-35307	5120-01-265-4872	501	6
33287	J-35506-2	5120-01-366-6260	512	7
33287	J-35506-3	5120-01-366-0895	512	5
33287	J-37789-A	5120-01-422-1308	510	6
33287	J-38655	5120-01-422-1326	510	7
33287	J-38731		510	11
33287	J-38731-1	5120-01-422-0173	510	12
33287	J-38731-2	5120-01-422-0219	510	13
33287	J-38731-3	5120-01-422-0139	510	14
33287	J-38732	5120-01-422-1301	511	5
33287	J-38732-1	5120-01-422-1293	511	6
33287	J-38734	5120-01-422-1329	510	10
33287	J-38736	5120-01-408-7051	510	21
33287	J-38736-1	5120-01-422-1310	510	16
33287	J-38736-2	5120-01-422-5406	510	17
33287	J-38736-3	5120-01-422-5411	510	18
33287	J-38736-4	5120-01-422-1318	510	19
33287	J-38736-5	5120-01-422-1324	510	20
33287	J-38736-6	5120-01-408-7051	510	15
33287	J-38737	5120-01-422-1313	510	3
33287	J-38739		511	1
33287	J-38739-1	5120-01-422-1297	511	2
33287	J-38739-2	5120-01-422-1302	511	3
33287	J-38739-3	5120-01-422-1306	511	4
33287	J-38868-A	5120-01-422-1300	510	5
33287	J-39084	5120-01-422-0334	510	9
33287	J-39250-1		505	11
33287	J-39295	2530-01-338-3056	505	
33287	J-39524		512	
33287	J-39524-1	5120-01-366-2520	512	2
33287	J-39524-2	5120-01-366-0893	512	1
33287	J-39524-4	5140-01-366-0642	512	8
33287	J-39524-5	5120-01-366-4713	512	6
25341	J-6278	5120-01-082-6447	503	7
33287	J-9276-3	5120-01-357-9123	501	19
27182	J105CCLXBZ02	5342-01-264-6532	211	2
25341	J21359-A	5120-01-176-1845	500	5
33287	J21465-01	5180-01-195-9777	500	2
33287	J21664	4910-01-210-1318	499	6
33287	J21786	5120-01-185-7957	502	9
33287	J21787	5120-01-187-3660	502	1

CROSS-REFERENCE INDEXES

PART NUMBER INDEX

CAGEC	PART NUMBER	STOCK NUMBER	FIG.	ITEM
25341	J21795-02	4910-01-178-8865	499	5
33287	J24396	4910-01-209-0729	500	6
33287	J25033-B	4910-01-179-2517	503	5
33287	J25323-1	3020-01-255-2906	504	7
33287	J25323-16	4820-01-252-6169	504	4
33287	J25323-17	4720-01-253-2809	504	3
33287	J25323-18	4720-01-253-2810	504	5
33287	J25323-2	4730-01-254-6023	504	6
33287	J25323-5	6685-01-256-3406	504	8
33287	J25323-7	6680-01-253-6782	504	9
33287	J26999-30	4910-01-238-2551	505	14
33287	J29163	5120-01-195-2721	501	4
33287	J29166	5120-01-196-0084	501	1
33287	J29169	5120-01-185-7955	501	5
33287	J29170	5120-01-195-4551	501	11
33287	J29174	5120-01-185-7960	501	21
33287	J29185	5120-01-185-7956	501	8
33287	J29185-2	5120-01-247-6629	501	7
33287	J29369	5120-01-201-7857	501	20
92871	J3212893	3040-01-192-3673	488	20
33287	J3289-20	5120-01-144-4484	499	3
33287	J33127	5180-01-186-3114	499	8
33287	J33141	5120-01-231-1709	504	1
33287	J33142	5120-01-187-3659	502	4
33287	J33143	5120-01-187-3607	503	1
33287	J33144	5120-01-185-7963	503	2
33287	J35184	5120-01-229-0842	503	3
33287	J38869	5120-01-414-1849	511	14
33287	J39636	5120-01-389-9992	501	22
27182	J450XXLXBZ01	2540-01-385-7497	289	8
27182	J4501XXBZ01	5306-01-265-8897	287	31
			294	7
33287	J4670-01	5120-01-210-8793	499	2
27182	J500IHXXBZ01	5340-01-265-8911	211	25
			212	28
			213	27
			214	22
27182	J50062XXBZ01	5340-01-276-6673	211	12
			212	6
27182	J50062XXBZ02	5340-01-276-7415	214	3
33287	J6471-2	5120-01-130-8865	500	4
33287	J6471-8	5120-01-391-5131	501	9
33287	J6692	4910-00-785-6437	505	15
25341	J7624	5120-01-082-6436	503	6
33287	J7818	5120-01-185-8024	501	10
27182	J8UBXXFXBZ01	5340-01-265-8859	292	12
33287	J8092	5120-00-677-2259	500	1
33287	J8608	5120-01-185-7962	502	8
33287	J8611-01	5120-01-185-7964	502	2
33287	J8763-02		499	4
27182	J95CCXRXBZ01	5340-01-310-1658	214	12

CROSS-REFERENCE INDEXES

PART NUMBER INDEX

CAGEC	PART NUMBER	STOCK NUMBER	FIG.	ITEM
27182	J95CCXXXBZ02	5340-01-310-1189	213	16
78940	L-111DR30-L		12	24
78940	L-111D30	2940-01-188-5117	12	23
98349	L-18-CPS-5-A-10	5340-01-191-8161	170	16
			195	5
98349	L-18-SV-5150-C-12	2530-01-197-2160	170	17
			195	6
98349	L-18-SV-5151-C-12	2530-01-189-2195	170	11
98349	L-18-VT-5276-B-11	2530-01-194-2049	170	10
98349	L-18-VT-5277-B-11	2510-01-205-6089	195	3
98349	L-20-MA-132-A-11	2530-01-252-8362	170	7
98349	L-20-MA-133-A-11	2530-01-249-1577	170	2
78940	L-223C24	5340-01-190-0402	12	29
46717	L-3604-13	4730-00-877-6298	436	5
78940	L-563C170	2940-01-188-3387	12	28
78940	L-638C2GS	2520-01-024-1273	12	31
16563	LD-1501	4720-01-187-3387	7	7
60038	LM603049LM603012	3110-00-892-0896	148	19
84256	LT1504-C6-08	4010-01-072-1167	433	5
92830	M-C1100-096-0875	5360-01-190-6218	99	15
10177	M-200-60-EP	5325-01-187-1604	26	2
19728	MAD-110A		45	68
19728	MAW-37		45	53
34623	MA128-21182	5330-01-037-0663	62	9
68505	MBD-233B		45	64
19728	MBD-2566		45	38
19728	MBD-438		45	55
19728	MBD-439		45	63
19728	MBD-442		45	56
19728	MBD-444		45	54
19728	MCS-47A		45	11
24975	MEL50	3120-00-450-1905	45	18
19728	MES-117A		45	13
19728	MES-61		45	16
19728	MES-718		45	71
19207	MES-72		45	72
19728	MES-78A		45	77
19728	MES-91		45	75
19728	MES-937		45	74
19728	MES-94		45	73
68505	MES-95S	5330-00-138-0251	45	41
68505	MEU-2042B	3010-01-068-6996	45	12
19728	MFJ-13A		45	46
24975	MFJ-2012BS	5977-01-189-4988	KITS	
19728	MFJ-28A		45	70
68505	MFY-1064B	5977-01-324-6323	45	45
68505	MFY-109	2920-01-211-4935	45	79

CROSS-REFERENCE INDEXES

PART NUMBER INDEX

CAGEC	PART NUMBER	STOCK NUMBER	FIG.	ITEM
68505	MFY-1130	2990-01-205-5981	45	2
19728	MFY-117		45	69
19728	MFY-133		45	7
19728	MFY-19		45	48
68505	MFY-19S	5360-01-190-7234	KITS	
19728	MFY-21		45	66
19728	MFY-2101SS		45	42
19728	MFY-25		45	6
19728	MFY-53		45	10
19728	MFY-63		45	15
68505	MFY-6701UT	2920-01-168-7891	44	2
68505	MFY1102S	2920-01-212-4976	45	67
9K475	MGLP-B6-4	5320-01-271-6357	71	9
			199	12
			211	10
			213	2
			214	23
			215	1
			216	11
			217	7
			220	3
			245	36
			261	8
			289	22
			291	1
			291	1
			293	3
			295	1
			296	14
			297	1
			297	1
			298	3
			299	4
			300	7
			307	8
			308	10
			334	2
			343	1
			347	10
9K475	MGLP-B6-7	5320-01-264-5978	199	14
			217	3
			264	1
			265	1
81349	MIL-DRF-62550/3		368	19
81349	MIL-H-13444	4720-00-006-9541	BULK	10
81349	MIL-P-18066	5530-00-641-6069	BULK	50
81349	MIL-PRF-62550/3	2540-01-194-3323	345	1
81349	MIL-PRF-6255013		348	1
81349	MIL-W-83420/14IN		275	10
			276	6
81349	MIL-W-83420/2-002	4010-01-293-0586	BULK	53

CROSS-REFERENCE INDEXES

PART NUMBER INDEX

CAGEC	PART NUMBER	STOCK NUMBER	FIG.	ITEM
19728	ML-128A		45	40
19728	ML-129		45	1
76599	MMF4-SS	4730-01-118-8278	11	2
			13	6
			14	6
			19	11
			27	4
			124	9
			177	2
			334	16
			386	7
34623	MS-00034206-221	5305-01-255-4950	274	22
96906	MS-35338-45	5310-00-407-9566	180	12
			454	3
			473	5
			474	8
			487	15
96906	MS122031	5310-00-285-7037	269	28
96906	MS122083	5325-00-331-4774	407	11
96906	MS15001-1	4730-00-050-4203	136	22
			137	8
			144	9
			144	19
			152	9
			152	19
			170	8
96906	MS15001-3	4730-00-050-4205	170	12
			170	18
			195	7
96906	MS15001-4	4730-00-050-4207	191	23
96906	MS15002-1	4730-00-172-0010	169	16
96906	MS15795-808	5310-00-619-1148	482	12
96906	MS15795-812	5310-00-625-5756	407	16
96906	MS15795-813	5310-00-802-4701	482	10
96906	MS15795-815	5310-00-595-6057	408	30
			488	16
96906	MS15795-819	5310-00-656-0114	476	13
96906	MS15795-820	5310-00-614-3505	35	8
96906	MS15795-841	5310-00-225-5328	482	17
96906	MS15795-852	5310-01-304-8733	407	12
			407	30
96906	MS15795-908	5310-00-045-5207	69	32
96906	MS15795-918	5310-00-045-5218	70	6
			481	4
80205	MS16562-20	5315-00-814-3529	230	11
80205	MS16562-256	5315-00-753-3895	202	22
80205	MS16562-28	5315-00-616-4261	133	12
96906	MS16624-1062	5325-00-803-7305	99	25
			133	7
96906	MS16624-1066	5325-00-282-1830	205	29
96906	MS16633-1031	5325-00-682-1762	116	19

CROSS-REFERENCE INDEXES

PART NUMBER INDEX

CAGEC	PART NUMBER	STOCK NUMBER	FIG.	ITEM
96906	MS16633-1050	5325-00-442-5845	155	7
			280	42
			281	42
			289	19
96906	MS16843-5	4030-00-237-8741	314	18
80205	MS16995-50	5305-00-988-7614	315	9
80205	MS16995-63	5305-00-225-7211	5	3
80205	MS16995-72		178	14
		5305-01-108-7471	436	11
80205	MS16995-77	5305-00-051-8605	5	12
			141	11
			149	9
			159	11
			161	4
			162	4
80205	MS16995-78	5305-00-226-7237	12	37
80205	MS16996-10	5305-00-052-6456	34	16
96906	MS17131-55	3110-00-056-9376	128	7
96906	MS17795-128	3120-00-425-6467	45	4
96906	MS17829-4F	5310-00-483-8791	321	18
			376	14
			382	6
96906	MS17986-C1013	5315-01-249-0555	437	2
96906	MS17986-C423	5315-00-376-9034	433	10
96906	MS17986-C840	5315-00-150-2793	276	3
80205	MS17986C1009	5315-01-473-1590	462	6
96906	MS18153-63	5305-00-914-6131	392	7
96906	MS19059-2410	3110-00-100-6162	314	38
96906	MS19061-20007	3110-00-900-2560	118	2
			120	11
34623	MS19081-86		150	3
96906	MS20002-12	5310-00-595-6612	39	9
96906	MS20002-20	5310-00-515-8776	453	14
96906	MS20392-3C67	5315-00-840-9653	243	11
96906	MS20392-4C69	5315-00-983-7402	268	8
96906	MS20392-4C77	5315-00-240-0251	243	32
96906	MS20392-4C95	5315-00-989-0534	244	11
96906	MS20392-6C17	5315-00-890-3461	390	11
96906	MS20426-AD6-8	5320-00-117-7288	289	10
96906	MS20426AD10-16	5320-00-117-6910	288	17
96906	MS20426AD6-12	5320-00-117-7291	213	4
96906	MS20426AD6-4	5320-00-526-2945	213	30
96906	MS20426AD6-7	5320-00-117-7287	224	16
96906	MS20426AD6-9	5320-00-117-7289	288	4
96906	MS20470AD6-10	5320-00-721-9062	197	22
			199	46
			212	17
			288	9
			289	20
80205	MS20470AD6-12	5320-00-117-6856	197	15
			197	15

CROSS-REFERENCE INDEXES

PART NUMBER INDEX

CAGEC	PART NUMBER	STOCK NUMBER	FIG.	ITEM
96906	MS20470AD6-7	5320-00-754-0992	198	5
			238	6
80205	MS20470AD6-8	5320-00-117-6853	197	15
			197	15
			197	36
			199	52
			289	13
80205	MS20470B4-4	5320-00-119-6823	498	3
96906	MS20604AD6W4	5320-00-957-2507	282	12
96906	MS20604B4W1	5320-00-957-2500	357	2
96906	MS20659-103	5940-00-113-3143	90	5
			93	12
			95	5
			96	12
96906	MS20659-104	5940-00-107-1481	75	5
			76	6
			92	10
			96	6
96906	MS20659-105	5940-00-114-1300	95	9
			96	10
96906	MS20659-106	5940-00-113-9819	95	10
			96	7
96906	MS20659-108	5940-00-115-2674	41	2
			95	12
			96	13
96906	MS20659-109	5940-00-114-1317	91	7
96906	MS20659-110	5940-00-115-4992	91	2
			94	6
96906	MS20659-111	5940-00-115-2678	41	7
			474	16
96906	MS20659-118	5940-00-115-2684	480	35
96906	MS20659-124	5940-00-115-5023	480	13
96906	MS20659-129	5940-00-114-1314	41	6
			95	16
			96	16
96906	MS20659-135	5940-00-115-5001	480	21
96906	MS20659-141	5940-00-113-9825	75	4
			95	20
			96	15
96906	MS20659-142	5940-00-114-1315	76	12
96906	MS20659-143	5940-00-115-2676	91	5
			94	5
96906	MS20659-151	5940-00-115-2683	480	32
96906	MS20659-152	5940-00-115-2685	69	39
96906	MS20659-157	5940-00-115-5012	480	15
96906	MS20659-163	5940-00-113-3145	95	17
			96	9
96906	MS20659-165	5940-00-113-0954	93	13
96906	MS20659-166	5940-00-113-9821	367	7
96906	MS20668-4	4030-00-132-9181	275	9
			276	7

CROSS-REFERENCE INDEXES

PART NUMBER INDEX

CAGEC	PART NUMBER	STOCK NUMBER	FIG.	ITEM
96906	MS20913-6S	4730-00-221-2140	363	12
80205	MS21042-08	5310-00-807-1466	273	14
			275	13
			276	9
80205	MS21042L4	5310-00-807-1475	279	14
80205	MS21042L5	5310-00-807-1476	279	17
80205	MS21042L6	5310-00-807-1477	279	26
96906	MS21044-C3	5310-00-208-9255	480	10
			482	11
96906	MS21044-N08	5310-00-811-3494	252	4
			252	4
			379	3
96906	MS21044-N3	5310-00-877-5797	379	49
96906	MS21044-N4	5310-00-877-5796	328	13
80205	MS21044N3	5310-00-877-5797	368	36
			393	15
96906	MS21045-04	5310-00-889-2543	55	10
96906	MS21045-3	5310-00-061-7326	365	22
96906	MS21045-6	5310-00-982-4908	128	55
			129	22
96906	MS21045-7	5310-00-274-9364	238	3
96906	MS21083N08	5310-00-941-6019	250	14
			378	10
			378	13
			389	1
96906	MS21083N12	5310-00-939-0783	404	8
96906	MS21245-L10	5310-00-449-2381	35	7
96906	MS21245-L12	5310-00-419-0876	36	7
			38	7
			39	10
			476	9
96906	MS21245-8	5310-00-449-2376	167	26
			191	14
96906	MS21266-2N	5325-00-074-3301	BULK	6
80205	MS21318-47	5305-00-253-5626	191	16
80205	MS21318-48	5305-00-253-5627	357	8
96906	MS21333-101	5340-00-088-6655	88	40
			93	27
			410	27
96906	MS21333-102	5340-00-984-8540	19	13
			88	11
			89	10
			96	26
			338	15
			339	24
			414	23
96906	MS21333-103	5340-00-854-6729	93	17
			96	23
			412	21
			425	17
			426	23

CROSS-REFERENCE INDEXES

PART NUMBER INDEX

CAGEC	PART NUMBER	STOCK NUMBER	FIG.	ITEM
96906	MS21333-103	5340-00-854-6729	427	23
96906	MS21333-104	5340-00-088-1254	75	33
			84	17
			88	15
			155	1
96906	MS21333-105	5340-00-809-1494	44	17
			44	17
			64	27
			75	29
			84	11
			88	19
			338	29
			339	25
			408	33
			480	22
96906	MS21333-106	5340-00-984-8541	44	11
96906	MS21333-107	5340-00-809-1500	75	50
			77	22
96906	MS21333-109	5340-00-067-3868	135	2
			141	22
96906	MS21333-112	5340-00-057-3043	160	15
			162	11
			424	2
			426	26
96906	MS21333-113	5340-00-988-1162	80	14
96906	MS21333-114	5340-00-057-3052	69	41
			282	6
96906	MS21333-116	5340-00-764-7052	77	11
96906	MS21333-119	5340-00-050-9077	123	3
			149	8
			414	12
96906	MS21333-120	5340-00-964-5267	75	44
			77	19
96906	MS21333-121	5340-00-954-6014	18	11
			89	8
			124	16
			125	16
			159	12
			160	3
			161	12
96906	MS21333-122	5340-00-833-8476	66	5
			79	21
			410	18
			412	15
96906	MS21333-123	5340-00-989-1771	77	3
			338	13
			484	2
96906	MS21333-124	5340-00-854-6730	416	16
			428	16
96906	MS21333-125	5340-00-725-5280	75	38
			77	20

CROSS-REFERENCE INDEXES

PART NUMBER INDEX

CAGEC	PART NUMBER	STOCK NUMBER	FIG.	ITEM
96906	MS21333-125	5340-00-725-5280	177	12
			178	22
96906	MS21333-126	5340-00-053-8994	75	39
			408	12
			472	4
			474	2
			480	24
96906	MS21333-128	5340-00-702-2848	41	11
			473	4
			474	2
			475	30
96906	MS21333-129	5340-00-151-9651	12	18
			41	23
96906	MS21333-19	5340-00-988-3186	365	21
96906	MS21333-36	5340-00-286-2494	327	48
96906	MS21333-41	5340-00-282-7537	246	22
			366	28
			386	10
96906	MS21333-42	5340-00-282-7517	327	27
96906	MS21333-45	5340-00-881-5303	11	8
96906	MS21333-62	5340-00-282-7509	84	15
96906	MS21333-65	5340-00-905-0790	485	6
96906	MS21333-66	5340-00-990-7610	332	24
96906	MS21333-67	5340-00-079-7837	21	16
			398	11
			400	9
			425	18
96906	MS21333-68	5340-00-843-7825	65	20
			88	30
			89	14
			95	28
			96	20
			327	30
96906	MS21333-69	5340-00-764-7051	83	19
			85	28
			88	24
			92	21
			95	46
			335	4
			468	11
96906	MS21333-70	5340-00-689-9514	84	33
			85	4
			88	2
			91	14
			92	20
			95	24
			488	7
96906	MS21333-71	5340-00-057-2904	75	25
			77	6
			79	22
			83	22

CROSS-REFERENCE INDEXES

PART NUMBER INDEX

CAGEC	PART NUMBER	STOCK NUMBER	FIG.	ITEM
96906	MS21333-71	5340-00-057-2904	85	29
			88	23
			92	15
			93	19
			95	26
			96	24
			282	3
			338	8
			339	2
			366	7
			410	24
			412	18
			414	14
96906	MS21333-72	5340-00-091-3790	55	16
			75	46
			79	17
			83	16
			85	26
			88	6
			93	26
			96	25
			366	5
			424	4
			426	25
			427	25
			488	14
96906	MS21333-73	5340-00-057-2906	92	12
			95	35
			410	19
			414	17
			416	18
			428	17
			453	4
96906	MS21333-74	5340-00-989-9222	83	9
			84	9
			88	20
			95	33
			282	5
			385	2
			414	15
96906	MS21333-75	5340-00-050-2740	59	9
			83	21
			84	12
			88	18
			91	11
			94	9
			96	27
			282	5
			338	16
			339	12
			410	22

CROSS-REFERENCE INDEXES

PART NUMBER INDEX

CAGEC	PART NUMBER	STOCK NUMBER	FIG.	ITEM
96906	MS21333-75	5340-00-050-2740	412	16
			414	20
			416	23
			424	3
			428	22
96906	MS21333-76	5340-00-724-7038	59	9
			83	18
			84	3
			88	21
			91	9
			95	44
			410	21
			414	18
			416	21
			428	20
96906	MS21333-77	5340-00-922-6300	58	11
			59	11
			84	2
			88	22
			93	22
			95	31
			96	28
			306	9
			310	4
			338	28
			379	2
			410	20
			414	19
			416	19
			428	18
96906	MS21333-78	5340-00-958-8457	282	17
			303	3
			338	4
			416	22
			428	21
96906	MS21333-79	5340-00-922-6301	41	20
96906	MS21333-86	5340-00-193-4111	370	18
96906	MS21333-96	5340-00-088-1255	485	7
96906	MS21333-98	5340-00-809-1490	75	23
			88	37
			400	11
96906	MS21333-99	5340-00-993-6207	77	14
			89	15
			334	15
			366	20
			368	42
			379	46
			386	6
96906	MS21334-25	5340-01-049-9564	13	24
			14	11
96906	MS21334-28	5340-00-926-5449	313	20

CROSS-REFERENCE INDEXES

PART NUMBER INDEX

CAGEC	PART NUMBER	STOCK NUMBER	FIG.	ITEM
96906	MS21334-31	5340-00-929-1794	477	7
96906	MS21334-34	5340-00-731-9611	480	7
96906	MS24521-7	4730-00-100-3918	379	44
96906	MS24585-281		276	29
96906	MS24625-42	5305-00-045-7603	224	8
			268	26
80205	MS24629-46	5305-00-855-0957	277	40
			294	2
80205	MS24629-57	5305-00-052-6921	28	2
80205	MS24629-73	5305-00-204-4850	327	17
80205	MS24630-66	5305-01-109-0587	323	6
96906	MS24659-23G	5930-00-856-1654	482	2
80205	MS24665-132	5315-00-839-2325	238	18
			250	10
80205	MS24665-134	5315-00-839-5820	202	18
			243	9
			293	10
80205	MS24665-208	5315-00-829-1480	368	8
80205	MS24665-281	5315-00-839-2326	274	5
			276	31
80205	MS24665-283	5315-00-842-3044	155	19
			390	14
80205	MS24665-298	5315-00-234-1861	268	9
96906	MS24665-319	5315-01-267-7570	403	8
80205	MS24665-351	5315-00-839-5821	134	1
96906	MS24665-355	5315-00-012-0123	144	13
			152	13
			183	4
			185	15
			187	19
			188	13
			195	12
80205	MS24665-357	5315-00-298-1481	437	11
80205	MS24665-377	5315-00-285-7161	365	8
			368	12
80205	MS24665-423	5315-00-013-7228	156	14
80205	MS24665-513	5315-00-239-8032	186	8
			188	19
			188	35
96906	MS24665-628	5315-00-846-0126	191	8
			453	15
96906	MS24667-52Z	5305-01-393-7801	210	11
96906	MS24667-77	5305-00-052-2232	199	18
			199	18
			199	18
			199	18
			199	18
			251	19
			270	11
			296	1
96906	MS24693-S350	5305-00-901-7250	390	7

CROSS-REFERENCE INDEXES

PART NUMBER INDEX

CAGEC	PART NUMBER	STOCK NUMBER	FIG.	ITEM
96906	MS24694-S98	5305-00-043-2682	279	23
96906	MS25036-106	5940-00-283-5280	367	11
96906	MS25036-111	5940-00-204-8990	367	13
96906	MS25036-112	5940-00-143-4794	72	20
			73	6
96906	MS25036-133	5940-00-115-5006	44	16
			69	14
			69	20
			69	25
			72	4
			72	19
			474	16
			480	17
96906	MS25036-153	5940-00-143-4774	367	15
96906	MS25036-156	5940-00-143-4775	367	14
96906	MS25043-32DA	5935-01-223-9420	74	7
96906	MS25171-1S	5975-00-553-6995	380	13
96906	MS25231-1873	6240-00-419-3185	49	2
96906	MS25306-222	5930-00-728-4328	55	19
			56	16
96906	MS25307-312	5930-00-978-8805	55	17
			56	12
96906	MS27040-13	5310-00-982-4939	313	23
96906	MS27130-A26	5310-00-141-3062	256	8
			257	8
			259	11
			262	7
96906	MS27130-A27	5310-00-003-6779	260	13
96906	MS27130-A28	5310-01-395-3549	213	22
			262	16
96906	MS27130-A31	5310-01-088-7962	254	14
96906	MS27130-A32		258	6
96906	MS27130-A37	5310-00-126-5168	228	11
96906	MS27130-A43	5310-01-046-5382	340	9
96906	MS27130-A50	5310-01-101-6046	340	8
96906	MS27130-CR27	5310-01-046-5371	487	6
96906	MS27130-CR31	5310-01-283-8482	383	7
96906	MS27130-S25	5310-00-990-1361	487	5
96906	MS27130-S26	5310-00-269-3466	225	13
96906	MS27130-S32	5310-00-006-8291	225	44
96906	MS27130-S37	5310-00-460-4490	218	6
			257	5
96906	MS27130-S43	5310-00-080-2411	432	5
			487	13
96906	MS27130-S44	5310-01-080-5746	487	13
96906	MS27130-S71	5310-01-085-1208	377	11
96906	MS27130-20	5310-01-009-9785	337	13
96906	MS27130-29	5310-00-074-2351	292	1
96906	MS27130-31	5310-01-093-3493	492	17
			216C	19
96906	MS27130A32	5310-00-401-5321	237	13

CROSS-REFERENCE INDEXES

PART NUMBER INDEX

CAGEC	PART NUMBER	STOCK NUMBER	FIG.	ITEM
96906	MS27130A32	5310-00-401-5321	262	4
96906	MS27142-2	5935-00-462-6603	65	4
			65	27
			75	11
			76	14
			80	2
			81	7
			83	20
			83	20
			84	32
			85	15
			86	8
			87	2
			87	4
			89	5
			90	6
			92	4
			93	9
96906	MS27142-3	5935-00-115-2306	65	17
			81	13
96906	MS27144-1	5935-00-167-7775	65	5
			65	26
			75	10
			76	4
			80	5
			81	3
			81	15
			83	3
			84	31
			85	1
			86	1
			87	1
			87	5
			89	2
			90	2
			92	6
			93	8
			95	2
			96	5
			367	8
96906	MS27144-2	5935-00-115-2307	65	13
			81	9
			483	5
96906	MS27144-3	5935-00-184-6707	75	9
			76	8
			81	5
			85	20
			86	13
96906	MS27147-1	5935-00-900-6281	366	32
			386	11
			469	11

CROSS-REFERENCE INDEXES

PART NUMBER INDEX

CAGEC	PART NUMBER	STOCK NUMBER	FIG.	ITEM
96906	MS27147-1	5935-00-900-6281	483	3
96906	MS27183-10	5310-00-809-4058	12	1
			16	21
			21	18
			50	14
			51	2
			62	28
			64	14
			64	21
			69	4
			70	11
			84	19
			84	21
			141	15
			155	5
			169	11
			177	11
			178	3
			197	29
			203	12
			204	12
			206	25
			207	7
			211	27
			212	26
			214	5
			225	42
			227	30
			238	19
			241	13
			243	7
			246	23
			248	26
			249	1
			250	13
			250	18
			267	2
			267	4
			267	4
			269	31
			272	3
			280	49
			281	49
			287	24
			288	21
			288	29
			292	10
			293	30
			294	5
			304	8
			312	2

CROSS-REFERENCE INDEXES

PART NUMBER INDEX

CAGEC	PART NUMBER	STOCK NUMBER	FIG.	ITEM
96906	MS27183-10	5310-00-809-4058	321	12
			323	8
			325	14
			326	11
			327	46
			328	14
			331	26
			343	16
			365	16
			365	25
			366	16
			368	22
			375	29
			379	14
			382	5
			397	9
			408	28
			429	12
			430	15
			475	8
			492	8
			497	4
96906	MS27183-11	5310-00-809-3078	4	31
			10	7
			11	25
			71	11
			180	20
			203	2
			206	3
			233	2
			243	16
			247	6
			248	19
			266	15
			430	35
96906	MS27183-12	5310-00-081-4219	5	4
			74	2
			142	28
			143	37
			150	28
			151	37
			154	7
			160	14
			162	13
			178	12
			180	11
			189	4
			190	2
			198	20
			199	2
			204	7

CROSS-REFERENCE INDEXES

PART NUMBER INDEX

CAGEC	PART NUMBER	STOCK NUMBER	FIG.	ITEM
96906	MS27183-12	5310-00-081-4219	209	3
			211	14
			212	12
			225	30
			226	15
			230	4
			235	7
			236	7
			243	24
			244	10
			273	8
			273	17
			277	33
			280	46
			281	46
			288	19
			321	19
			321	31
			324	8
			325	27
			333	23
			363	15
			376	15
			377	14
			378	29
			402	7
			429	6
			432	4
			433	8
			436	9
			473	2
			474	6
			480	5
96906	MS27183-13	5310-00-087-7493	11	5
			37	4
			52	25
			103	16
			153	16
			159	3
			160	10
			205	2
			205	36
			206	1
			206	9
			206	29
			238	22
			240	7
			268	18
			270	14
			285	5
			286	10

CROSS-REFERENCE INDEXES

PART NUMBER INDEX

CAGEC	PART NUMBER	STOCK NUMBER	FIG.	ITEM
96906	MS27183-13	5310-00-087-7493	288	7
			292	17
			293	5
			398	23
			429	17
			436	8
			490	2
96906	MS27183-14	5310-00-080-6004	2	3
			16	24
			23	2
			24	7
			66	6
			79	20
			128	54
			129	23
			134	2
			142	14
			150	14
			151	14
			163	6
			164	2
			174	15
			175	9
			187	9
			189	1
			190	4
			245	22
			266	25
			272	25
			273	2
			273	2
			277	2
			280	25
			281	25
			328	18
			329	13
			332	34
			392	9
			408	4
			431	3
			438	7
			461	9
96906	MS27183-15	5310-00-809-4061	1	3
			8	1
			37	11
			170	22
96906	MS27183-16	5310-00-809-4085	36	2
			38	2
			136	4
			169	15
			171	2

CROSS-REFERENCE INDEXES

PART NUMBER INDEX

CAGEC	PART NUMBER	STOCK NUMBER	FIG.	ITEM
96906	MS27183-16	5310-00-809-4085	202	33
			234	9
			234	9
			239	6
			239	6
			271	10
			271	25
			313	22
			398	4
			402	9
			408	19
			438	18
			475	11
96906	MS27183-17	5310-00-809-5997	209	13
			292	19
			429	37
96906	MS27183-18	5310-00-809-5998	142	17
			150	17
			151	17
			165	9
			166	6
			293	9
			295	7
			295	13
			363	17
			390	3
			455	3
96906	MS27183-19	5310-00-809-3079	363	24
			455	5
96906	MS27183-20	5310-00-068-5285	165	5
			166	4
			179	9
			180	10
96906	MS27183-21	5310-00-823-8803	193	5
			199	41
			437	4
96906	MS27183-23	5310-00-809-8533	385	10
96906	MS27183-4	5310-00-950-1310	274	21
96906	MS27183-42	5310-00-014-5850	63	6
			93	25
			95	39
			96	29
			169	20
			199	33
			199	57
			202	42
			203	31
			205	39
			206	15
			213	15
			214	11

CROSS-REFERENCE INDEXES

PART NUMBER INDEX

CAGEC	PART NUMBER	STOCK NUMBER	FIG.	ITEM
96906	MS27183-42	5310-00-014-5850	222	11
			227	49
			241	8
			243	2
			244	18
			246	8
			246	13
			247	12
			248	4
			249	41
			268	25
			272	15
			293	12
			299	2
			303	10
			331	22
			333	15
			337	17
			339	27
			347	4
			368	26
			374	14
			411	7
			429	4
			430	8
			430	40
			480	9
96906	MS27183-57	5310-01-280-5796	379	25
96906	MS27183-8	5310-00-809-8546	46	10
96906	MS27183-9	5310-00-823-8804	5	6
			15	20
			18	3
			21	2
			21	28
			253	2
			494	4
			495	12
			496	7
96906	MS27407-4	5930-00-445-9274	55	6
			56	18
96906	MS28775-222	5331-00-297-9990	72	24
96906	MS28775-223	5331-00-171-6649	163	11
96906	MS3108R18-11S	5935-00-806-4183	93	11
96906	MS3217-2075	5325-01-388-2363	456	10
96906	MS3367-1-0	5975-00-984-6582	64	28
			81	11
			160	2
			469	2
96906	MS3367-1-9	5975-00-074-2072	12	9
			98	8
			485	8

CROSS-REFERENCE INDEXES

PART NUMBER INDEX

CAGEC	PART NUMBER	STOCK NUMBER	FIG.	ITEM
96906	MS3367-2-0	5975-00-899-4606	282	10
96906	MS3367-2-9	5975-00-156-3253	488	5
96906	MS3367-3		404	16
96906	MS3367-3-0	5975-00-985-6630	75	21
			83	38
			85	31
			89	12
			94	10
			95	27
			96	32
			178	8
			335	15
			336	12
			338	18
			408	9
			436	3
			483	2
96906	MS3367-3-9	5975-00-451-5001	5	8
			435	8
96906	MS3367-4-0	5975-00-903-2284	99	3
96906	MS3367-4-2	5975-00-903-2288	98	6
96906	MS3367-5-0	5975-00-133-8687	51	14
			386	3
96906	MS3367-5-9	5975-00-111-3208	492	6
96906	MS3367-7	5975-01-205-5379	313	7
			333	32
			339	13
			410	28
			412	22
			414	24
			416	27
			485	9
96906	MS3367-7-0	5975-01-034-5871	98	7
			332	8
			369	2
			468	1
			470	4
			470	4
			472	6
			473	7
			474	1
			475	3
			479	4
			480	1
			492	14
96906	MS3367-7-9	5975-00-570-9598	18	9
			41	12
			77	28
			379	7
			381	2
96906	MS3456W12-5S	5935-01-147-0148	95	21

CROSS-REFERENCE INDEXES

PART NUMBER INDEX

CAGEC	PART NUMBER	STOCK NUMBER	FIG.	ITEM
96906	MS3456W12-5S	5935-01-147-0148	96	2
96906	MS3456W18-11S	5935-01-035-5139	367	9
96906	MS3456W24-11S	5935-01-173-7654	75	18
96906	MS35058-22	5930-00-655-1514	367	5
96906	MS35059-21	5930-00-615-9376	52	30
96906	MS35059-31	5930-00-615-7897	367	6
96906	MS35190-272	5305-00-088-8332	374	2
			429	10
			430	6
			430	20
			430	33
96906	MS35190-273	5305-00-958-5471	249	17
80205	MS35190-289	5305-00-958-5246	247	3
			271	15
			338	19
80205	MS35190-290	5305-00-954-3937	243	29
80205	MS35190-305	5305-00-958-5469	225	46
			226	31
80205	MS35190-306	5305-00-958-5253	225	46
			226	25
			226	31
80205	MS35190-307	5305-00-958-5254	226	25
			226	31
96906	MS35190-324	5305-00-958-5262	383	5
96906	MS35191-272	5305-00-984-7363	412	23
96906	MS35191-273	5305-00-984-7341	377	5
96906	MS35191-274	5305-00-984-7342	251	17
			251	42
			252	20
96906	MS35191-276	5305-00-984-7343	323	14
			429	15
96906	MS35191-292	5305-00-988-9106	248	10
96906	MS35191-324	5305-00-959-2704	382	8
96906	MS35206-214	5305-00-993-0190	43	37
			297	7
			297	7
96906	MS35206-219	5305-00-984-4976	55	3
96906	MS35206-226	5305-00-984-4983	55	2
96906	MS35206-228	5305-00-984-4988	213	19
			367	16
96906	MS35206-230	5305-00-889-3000	43	34
96906	MS35206-231	5305-00-889-3001	43	39
96906	MS35206-232	5305-00-984-4992	79	13
96906	MS35206-242	5305-00-889-3002	45	51
96906	MS35206-243	5305-00-984-6191	47	7
			354	11
96906	MS35206-244	5305-00-984-6192	72	21
			73	9
96906	MS35206-245	5305-00-984-6193	84	23
			280	36
			281	36

CROSS-REFERENCE INDEXES

PART NUMBER INDEX

CAGEC	PART NUMBER	STOCK NUMBER	FIG.	ITEM
96906	MS35206-245	5305-00-984-6193	300	12
			453	5
96906	MS35206-246	5305-00-984-6194	52	21
			59	24
			273	11
			379	1
96906	MS35206-247	5305-00-984-6195	48	4
			275	7
			282	14
			337	6
			343	10
			378	9
			378	25
			380	3
96906	MS35206-248	5305-00-984-6196	280	10
			281	10
96906	MS35206-249	5305-00-984-6197	50	9
96906	MS35206-251	5305-00-984-6199	213	33
			214	26
96906	MS35206-263	5305-00-984-6210	213	20
			214	17
96906	MS35206-264	5305-00-984-6211	63	7
96906	MS35206-265	5305-00-984-6212	35	13
			88	41
			202	3
			284	13
			293	11
96906	MS35206-266	5305-00-984-6213	203	32
			222	12
96906	MS35206-267	5305-00-984-6214	272	19
			281	16
96906	MS35206-280	5305-00-988-1724	97	2
			237	7
			330	3
96906	MS35206-281	5305-00-988-1725	49	8
			51	1
			59	25
			75	37
			83	29
			84	18
			88	36
			213	6
			214	2
			267	1
			280	14
			281	14
			313	5
			316	15
			320	14
			320	26
			321	28

CROSS-REFERENCE INDEXES

PART NUMBER INDEX

CAGEC	PART NUMBER	STOCK NUMBER	FIG.	ITEM
96906	MS35206-281	5305-00-988-1725	378	20
96906	MS35206-283	5305-00-988-1727	198	18
			213	8
			254	21
			376	17
96906	MS35206-284	5305-00-988-1170	267	17
			267	17
96906	MS35206-285	5305-00-988-1171	237	12
96906	MS35206-295	5305-00-984-5675	277	34
96906	MS35206-298	5305-00-984-5678	233	1
96906	MS35206-329	5305-00-150-3408	56	21
96906	MS35206-345	5305-00-482-6825	254	29
			281	7
96906	MS35207-242	5305-00-958-4357	72	13
96906	MS35207-261	5305-00-990-6444	43	36
			45	30
			45	47
			52	27
			485	26
96906	MS35207-262	5305-00-989-6265	39	32
			393	11
			404	3
96906	MS35207-263	5305-00-989-7434	45	43
			52	29
			54	6
			55	20
			56	7
			59	23
			282	2
			317	5
			338	10
			398	15
96906	MS35207-264	5305-00-989-7435	52	28
			95	25
			207	10
			255	6
			258	5
			260	8
			337	19
			338	9
			379	53
96906	MS35207-265	5305-00-993-1848	52	3
			54	11
			55	22
			59	18
			79	24
			96	19
			246	2
			252	34
			255	33
			325	9

CROSS-REFERENCE INDEXES

PART NUMBER INDEX

CAGEC	PART NUMBER	STOCK NUMBER	FIG.	ITEM
96906	MS35207-266	5305-00-995-3444	58	7
			63	7
			247	10
			256	2
			257	3
			260	14
			262	9
			263	9
			291	2
			291	2
			297	6
			297	6
96906	MS35207-270	5305-00-995-3440	46	18
96906	MS35207-271	5305-00-995-6311	368	27
96906	MS35207-282	5305-00-993-2460	391	1
96906	MS35207-284	5305-00-993-2457	376	20
			382	4
			389	7
80205	MS35215-53	5305-00-206-2508	69	30
96906	MS35265-43	5305-00-614-3423	46	12
96906	MS35266-65	5305-00-616-4831	407	35
96906	MS35291-41	5306-00-226-4834	211	16
			212	13
96906	MS35307-355	5305-00-478-0273	73	2
96906	MS35307-357	5305-00-655-9711	73	12
96906	MS35307-361	5305-00-721-5665	482	14
96906	MS35307-389	5305-00-660-2832	456	15
80205	MS35308-384	5305-00-689-7472	148	26
96906	MS35309-306	5305-00-543-5828	52	14
96906	MS35333-35	5310-00-579-5554	72	12
96906	MS35333-38	5310-00-559-0070	379	12
96906	MS35333-39	5310-00-576-5752	333	17
			349	4
96906	MS35333-40	5310-00-550-1130	68	7
			269	32
			327	16
			366	4
			484	6
96906	MS35333-41	5310-00-167-0721	436	10
96906	MS35333-42	5310-00-595-7237	412	6
96906	MS35333-43	5310-00-685-3228	327	13
96906	MS35333-44	5310-00-194-1483	46	15
			388	14
96906	MS35333-47	5310-00-550-3714	380	12
96906	MS35335-33	5310-00-209-0786	55	13
96906	MS35336-53	5310-00-957-2677	296	2
96906	MS35338-100	5310-00-261-8278	69	31
96906	MS35338-103	5310-00-184-8971	69	29
			434	5
			435	10
96906	MS35338-141	5310-00-984-7042	73	3

CROSS-REFERENCE INDEXES

PART NUMBER INDEX

CAGEC	PART NUMBER	STOCK NUMBER	FIG.	ITEM
96906	MS35338-141	5310-00-984-7042	482	9
96906	MS35338-27	5310-00-543-5101	88	49
96906	MS35338-40	5310-00-543-2410	384	7
96906	MS35338-41	5310-00-045-4007	39	30
			56	22
			213	18
			214	14
			333	29
96906	MS35338-42	5310-00-045-3299	46	13
			48	2
			52	22
			64	18
			380	2
			406	34
96906	MS35338-43	5310-00-045-3296	39	33
			54	12
			55	21
			59	17
			240	19
			260	10
			283	25
			327	37
			335	13
			336	10
			337	18
			338	11
			407	23
			410	13
			410	17
			412	10
			416	15
			426	22
			427	17
			428	15
			438	21
			460	3
			485	16
96906	MS35338-44	5310-00-582-5965	28	7
			53	4
			62	26
			75	35
			93	18
			155	12
			156	17
			205	23
			237	11
			240	24
			250	9
			267	6
			286	36
			287	11

CROSS-REFERENCE INDEXES

PART NUMBER INDEX

CAGEC	PART NUMBER	STOCK NUMBER	FIG.	ITEM
96906	MS35338-44	5310-00-582-5965	308	5
			311	3
			313	2
			327	41
			342	5
			343	15
			365	5
			368	23
			407	31
			410	37
			414	16
			416	20
			425	8
			426	5
			427	9
			428	19
			430	41
			467	5
			492	16
			498	18
96906	MS35338-45	5310-00-407-9566	19	19
			41	24
			59	4
			136	15
			137	2
			205	32
			206	19
			211	30
			212	30
			225	31
			226	16
			231	13
			268	5
			269	15
			287	19
			328	7
			329	7
			340	10
			363	14
			373	9
			407	15
			430	13
			432	3
			461	6
			BULK	96
96906	MS35338-46	5310-00-637-9541	1	4
			2	5
			5	13
			16	22
			23	17
			24	25

CROSS-REFERENCE INDEXES

PART NUMBER INDEX

CAGEC	PART NUMBER	STOCK NUMBER	FIG.	ITEM
96906	MS35338-46	5310-00-637-9541	34	13
			35	3
			36	15
			37	3
			38	15
			43	48
			44	3
			52	24
			62	7
			64	13
			68	3
			70	10
			72	2
			75	43
			77	2
			79	19
			83	33
			88	38
			124	15
			125	15
			164	3
			169	2
			174	14
			175	8
			205	35
			286	9
			286	35
			328	17
			340	3
			352	2
			363	11
			372	5
			379	23
			404	13
			405	5
			408	6
			457	6
			459	2
			468	8
			472	15
			475	23
			476	2
			490	9
96906	MS35338-47	5310-00-209-0965	35	16
			36	10
			37	10
			38	10
			42	4
			150	35
			151	41
			171	3

CROSS-REFERENCE INDEXES

PART NUMBER INDEX

CAGEC	PART NUMBER	STOCK NUMBER	FIG.	ITEM
96906	MS35338-47	5310-00-209-0965	404	14
			405	4
			408	13
			472	21
			475	17
96906	MS35338-48	5310-00-584-5272	156	21
			363	19
			369	1
		5310-00-003-4094	408	17
			410	35
			412	26
		5310-00-584-5272	424	7
96906	MS35338-49	5310-00-167-0680	476	12
96906	MS35338-50	5310-00-820-6653	193	6
96906	MS35338-63	5310-00-274-8715	249	3
			315	11
96906	MS35338-65	5310-00-011-5093	138	17
			139	13
			145	17
			146	13
			164	3
96906	MS35338-67	5310-00-011-6121	70	7
96906	MS35338-8	5310-00-261-7340	341	8
96906	MS35340-43	5310-00-721-7809	35	12
			398	12
96906	MS35340-47	5310-00-655-9370	438	17
96906	MS35340-48	5310-00-834-7606	438	12
96906	MS35387-1	9905-00-205-2795	212	10
96906	MS35387-2	9905-00-202-3639	330	2
96906	MS35421-1	6220-00-299-7425	63	3
			63	9
96906	MS35421-2	6220-00-299-7426	63	3
			63	9
96906	MS35422-1	6220-00-729-9295	63	2
96906	MS35423-1	6220-00-577-3434	63	1
96906	MS35423-2	6220-00-726-1916	63	1
96906	MS35425-74	5310-01-088-2490	340	2
96906	MS35425-75	5310-01-078-5996	261	1
96906	MS35436-16	5940-00-020-0072	79	12
96906	MS35489-11	5325-00-291-9366	92	13
			333	34
			380	7
96906	MS35489-110	5325-00-202-4005	80	17
96906	MS35489-115	5325-00-928-6214	65	7
96906	MS35489-135	5325-00-263-6648	496	3
96906	MS35489-143	5325-01-292-7558	485	24
96906	MS35489-149	5325-01-309-7164	379	16
96906	MS35489-18	5325-00-276-6090	496	21
96906	MS35489-19	5325-00-276-6091	369	4
96906	MS35489-21	5325-00-270-8891	380	5
96906	MS35489-23	5325-00-276-6343	70	14

CROSS-REFERENCE INDEXES

PART NUMBER INDEX

CAGEC	PART NUMBER	STOCK NUMBER	FIG.	ITEM
96906	MS35489-23	5325-00-276-6343	473	9
			481	10
96906	MS35489-27	5325-00-290-1960	70	13
96906	MS35489-39X	5325-01-274-3317	95	30
96906	MS35489-40	5325-00-185-0004	96	18
96906	MS35489-41	5325-01-088-7468	327	19
96906	MS35489-45	5325-00-285-8363	424	6
96906	MS35489-48	5325-00-174-9332	80	12
			315	13
96906	MS35489-50	5325-00-754-1155	428	8
96906	MS35492-28	5305-00-900-2546	382	1
96906	MS35493-51	5305-00-901-2099	394	5
96906	MS35493-55	5305-00-901-2134	385	13
96906	MS35495-124	5305-01-315-9512	392	2
96906	MS35495-127	5305-01-317-0409	393	6
96906	MS35649-103	5310-00-852-8593	498	10
96906	MS35649-202	5310-00-934-9758	64	16
			64	26
			88	43
			208	28
			213	14
			214	10
			240	1
			240	13
			240	20
			241	7
			269	2
			283	26
			327	32
			335	14
			336	11
96906	MS35649-205	5310-00-934-9764	63	5
			85	6
			169	19
			246	33
			286	16
			293	15
96906	MS35649-2252	5310-00-997-1888	88	39
			324	28
			375	19
			375	27
			378	27
96906	MS35649-2255	5310-00-855-1102	52	16
96906	MS35649-2384	5310-00-477-6768	482	8
96906	MS35649-262	5310-00-934-9747	333	28
96906	MS35649-282	5310-00-934-9757	48	1
96906	MS35650-302	5310-00-934-9751	45	49
			327	36
			333	18
96906	MS35650-382	5310-00-934-9754	380	1
96906	MS35690-824	5310-00-010-3028	437	6

CROSS-REFERENCE INDEXES

PART NUMBER INDEX

CAGEC	PART NUMBER	STOCK NUMBER	FIG.	ITEM
96906	MS35691-33	5310-00-834-8732	44	6
96906	MS35692-53	5310-01-280-6751	39	56
96906	MS35692-54	5310-00-850-7004	144	10
			144	18
			152	10
			152	18
			170	3
			170	9
			170	13
			170	19
			183	5
			185	14
			187	18
			188	14
			195	8
			437	10
96906	MS35692-94	5310-00-849-6882	191	9
80205	MS35751-42	5306-00-911-5005	433	1
96906	MS35751-43	5306-00-753-6996	403	13
96906	MS35751-44	5306-00-012-0231	403	10
96906	MS35756-16	5315-00-616-5529	404	9
80205	MS35756-17	5315-00-012-4553	36	5
			38	5
			39	8
			407	26
80205	MS35756-20	5315-00-616-5501	476	8
80205	MS35756-6		43	4
80205	MS35756-8	5315-00-616-5526	35	9
96906	MS35764-1303	5306-01-068-4592	409	5
			411	11
			415	10
96906	MS35764-848	5306-01-253-1611	150	36
96906	MS35764-850	5306-01-253-1612	202	34
96906	MS35764-851	5306-01-203-2637	313	21
96906	MS35764-853	5306-01-276-0848	35	15
96906	MS35764-861	5306-01-254-6356	171	4
96906	MS35764-887	5306-01-253-4426	179	8
96906	MS35769-9	5330-00-855-6045	4	24
96906	MS35810-1	5315-00-417-5223	238	13
96906	MS35810-3	5315-00-754-0848	153	21
96906	MS35810-4	5315-00-815-8840	153	4
			155	17
96906	MS35810-6	5315-00-140-1938	293	16
96906	MS35823-7A	5340-01-053-7128	224	2
96906	MS35842		368	3
96906	MS35842-11	4730-00-908-3194	310	7
			379	9
96906	MS35842-14	4730-00-908-6292	10	15
			331	20
96906	MS35842-15	4730-00-908-6293	387	2
96906	MS39061-4	5930-00-226-6429	46	6

CROSS-REFERENCE INDEXES

PART NUMBER INDEX

CAGEC	PART NUMBER	STOCK NUMBER	FIG.	ITEM
96906	MS45904-60	5310-00-080-9786	88	27
			215	9
			222	10
			339	8
			346	6
			347	3
			426	18
			427	21
			467	1
96906	MS45904-68	5310-00-889-2528	327	15
96906	MS49006-6	4730-00-045-9769	142	30
			150	30
			151	39
96906	MS51085-1	2910-00-025-3493	335	9
			336	6
			388	7
96906	MS51108-139	5305-01-331-6284	437	3
96906	MS51113-1	5930-00-307-8856	46	19
96906	MS51321-2	2910-01-455-3197	384	6
96906	MS51335-1	2540-00-078-6633	191	7
			191	15
96906	MS51412-1	5310-01-303-4701	43	31
			425	6
			426	9
			427	7
96906	MS51412-18	5310-01-253-1618	208	27
			252	5
			252	5
			260	11
			273	13
			275	12
			276	8
			300	13
			327	31
96906	MS51412-2	5310-01-234-9416	35	14
			37	7
			52	11
			56	8
			59	16
			234	16
			246	32
			247	23
			249	44
			260	7
			269	3
			284	14
			298	8
			307	12
			321	16
			327	38
			327	44

CROSS-REFERENCE INDEXES

PART NUMBER INDEX

CAGEC	PART NUMBER	STOCK NUMBER	FIG.	ITEM
96906	MS51412-5	5310-01-234-9415	88	16
96906	MS51415-7	5310-01-218-7137	457	10
96906	MS51415-9	5310-01-216-7390	44	5
			209	14
			457	11
96906	MS51470-03	5310-01-249-0899	398	1
96906	MS51471-01	5310-01-272-9981	142	35
			143	41
96906	MS51480-05	5305-01-264-0923	245	9
96906	MS51500A10-6	4730-01-066-1278	6	9
96906	MS51815-4P	4730-00-985-4804	505	16
96906	MS51844-63	4030-01-142-0456	276	4
96906	MS51848-13	5310-01-016-9348	283	18
96906	MS51849-100	5305-01-075-0957	243	20
			308	4
96906	MS51849-11	5305-00-164-7082	65	8
			65	15
96906	MS51849-33	5305-00-227-1543	333	31
96906	MS51849-53	5305-00-115-9406	349	8
96906	MS51849-55	5305-00-115-9934	205	14
96906	MS51849-64	5305-00-180-4966	39	6
			259	12
			263	7
			289	4
			292	3
			365	20
96906	MS51849-65	5305-01-006-2052	252	37
96906	MS51849-74	5305-00-470-3321	283	22
96906	MS51849-75	5305-01-006-2053	208	25
			279	29
			429	11
96906	MS51849-76	5305-00-240-0194	67	2
			88	10
			169	22
			197	33
			199	59
			205	4
			206	7
			225	50
			226	30
			248	28
			286	15
			327	28
			411	5
			460	2
96906	MS51849-77	5305-01-005-6715	243	27
96906	MS51849-78	5305-00-240-6668	85	3
			88	1
			327	50
96906	MS51849-79	5305-00-240-6541	227	50
96906	MS51849-95	5305-01-016-4344	453	18

CROSS-REFERENCE INDEXES

PART NUMBER INDEX

CAGEC	PART NUMBER	STOCK NUMBER	FIG.	ITEM
96906	MS51849-98	5305-00-390-0524	83	29
			272	8
96906	MS51851-126	5305-01-101-3312	457	4
96906	MS51851-43	5305-00-757-8287	379	5
96906	MS51851-64	5305-00-757-8122	75	44
			488	13
96906	MS51851-85	5305-00-191-3640	313	10
96906	MS51851-95	5305-01-087-4478	5	9
96906	MS51859-20	5310-01-313-3562	329	16
			461	4
96906	MS51861-22C		332	45
96906	MS51861-26	5305-00-432-4165	49	12
96906	MS51861-34	5305-00-058-1082	12	34
			274	28
96906	MS51861-35	5305-00-432-4170	403	12
			433	4
96906	MS51861-45	5305-00-432-4201	485	5
96906	MS51861-49	5305-00-432-4205	208	9
			280	34
			281	34
			331	29
96906	MS51861-67	5305-00-432-4253	395	1
96906	MS51863-22	5305-01-076-6308	43	45
96906	MS51863-33	5305-01-138-9540	46	4
			97	11
			97	11
			367	1
96906	MS51869-23	5305-01-039-6633	44	28
96906	MS51871-1	5305-01-084-6067	124	17
			125	17
			366	3
96906	MS51873-32	4730-01-315-3242	385	9
96906	MS51941-10	5310-01-025-6444	383	8
96906	MS51943-3	5310-00-472-2963	421	9
			422	4
96906	MS51943-31	5310-00-061-4650	5	7
			14	25
			15	3
			16	3
			17	7
			18	4
			18	10
			21	1
			25	7
			27	13
			29	3
			42	8
			46	21
			50	8
			71	10
			84	22

CROSS-REFERENCE INDEXES

PART NUMBER INDEX

CAGEC	PART NUMBER	STOCK NUMBER	FIG.	ITEM
96906	MS51943-31	5310-00-061-4650	97	4
			99	11
			124	13
			125	13
			141	17
			153	17
			169	27
			169	33
			177	13
			178	21
			202	26
			203	9
			203	23
			204	14
			206	24
			210	4
			211	26
			212	27
			241	5
			243	8
			244	7
			245	16
			245	32
			246	18
			247	5
			247	18
			248	7
			249	27
			250	19
			251	1
			252	22
			253	21
			254	22
			255	20
			267	3
			267	13
			269	13
			270	1
			270	26
			271	9
			272	2
			274	18
			275	20
			276	20
			285	13
			286	17
			288	22
			288	30
			289	5
			293	31
			316	21

CROSS-REFERENCE INDEXES

PART NUMBER INDEX

CAGEC	PART NUMBER	STOCK NUMBER	FIG.	ITEM
96906	MS51943-31	5310-00-061-4650	323	13
			331	9
			332	42
			333	39
			334	5
			338	22
			339	17
			343	17
			366	30
			368	32
			375	28
			376	13
			384	9
			398	27
			399	15
			400	13
			402	12
			408	27
			409	9
			413	5
			415	15
			417	18
			418	9
			419	4
			420	6
			421	6
			422	8
			423	9
			429	22
			430	17
			430	38
			468	4
			475	9
			477	5
			478	3
			484	15
			485	14
			486	9
			492	7
			487E	10
96906	MS51943-32	5310-00-935-9022	64	29
			368	18
			379	22
			380	14
			393	12
			411	19
			484	12
			485	17
96906	MS51943-33	5310-00-814-0673	74	6
			83	25
			152	4

CROSS-REFERENCE INDEXES

PART NUMBER INDEX

CAGEC	PART NUMBER	STOCK NUMBER	FIG.	ITEM
96906	MS51943-33	5310-00-814-0673	153	25
			154	6
			169	33
			189	6
			190	1
			205	1
			206	10
			206	13
			208	29
			209	8
			211	19
			212	16
			225	28
			226	12
			230	16
			242	5
			250	23
			266	1
			268	10
			268	29
			269	16
			284	12
			288	20
			292	15
			328	6
			328	15
			329	9
			339	22
			364	7
			375	31
			390	5
			401	9
			409	4
			411	4
			413	6
			414	11
			415	14
			416	14
			417	11
			418	8
			419	9
			420	4
			423	4
			428	14
			429	18
			463	12
			468	7
			480	4
96906	MS51943-34	5310-00-241-6658	154	5
			198	19
			199	1

CROSS-REFERENCE INDEXES

PART NUMBER INDEX

CAGEC	PART NUMBER	STOCK NUMBER	FIG.	ITEM
96906	MS51943-34	5310-00-241-6658	273	16
			277	35
			280	47
			281	47
			317	11
			321	30
			373	8
			376	18
			378	28
			389	14
			402	8
			415	4
			433	7
96906	MS51943-35	5310-00-935-9021	2	15
			23	4
			24	10
			26	6
			52	23
			103	17
			144	4
			144	14
			152	14
			159	4
			160	9
			164	4
			169	1
			187	10
			189	2
			190	3
			205	9
			210	14
			245	30
			251	45
			266	24
			268	19
			270	19
			270	21
			272	29
			273	22
			273	22
			274	17
			275	19
			276	19
			277	4
			278	12
			283	8
			285	9
			286	29
			288	13
			292	16
			293	6

CROSS-REFERENCE INDEXES

PART NUMBER INDEX

CAGEC	PART NUMBER	STOCK NUMBER	FIG.	ITEM
96906	MS51943-35	5310-00-935-9021	329	12
			369	10
			398	25
			409	8
			410	9
			411	14
			412	7
			414	9
			415	13
			416	10
			425	16
			426	20
			427	20
			428	10
			431	7
			456	18
			463	3
			463	3
			464	1
			470	13
			471	5
			484	13
			490	10
96906	MS51943-36	5310-00-814-0672	152	4
			272	24
96906	MS51943-37	5310-00-241-6659	170	14
96906	MS51943-39	5310-00-488-3889	2	8
			140	1
			147	1
			179	3
			180	4
			181	9
			182	4
			183	14
			184	1
			184	1
			185	7
			186	7
			187	11
			188	5
			188	38
			191	1
			199	22
			199	22
			199	22
			199	22
			242	8
			245	26
			251	47
			270	22
			283	14

CROSS-REFERENCE INDEXES

PART NUMBER INDEX

CAGEC	PART NUMBER	STOCK NUMBER	FIG.	ITEM
96906	MS51943-39	5310-00-488-3889	315	5
			429	36
			453	1
			455	6
			456	17
			463	9
			471	1
96906	MS51943-43	5310-00-061-4651	186	11
			187	6
96906	MS51943-45	5310-00-409-3333	144	3
			152	3
			181	16
			182	2
			183	13
			184	19
			195	13
			270	35
			456	20
			471	3
96906	MS51957-131		255	35
96906	MS51957-134	5305-01-052-4438	280	7
96906	MS51957-28		214	15
96906	MS51957-45	5305-00-054-6670	482	19
96906	MS51957-47	5305-00-054-6672	64	17
			252	7
96906	MS51957-64B	5305-01-083-1591	465	2
96906	MS51957-67	5305-00-050-9233	280	16
96906	MS51957-77	5305-00-071-1313	373	4
			376	4
96906	MS51957-79	5305-00-071-1315	316	16
			320	15
			320	27
			375	23
			378	23
96906	MS51957-8	5305-00-054-5642	238	21
96906	MS51957-83	5305-00-071-1318	214	4
			246	24
			251	7
			252	26
			267	18
			296	15
96906	MS51958-63	5305-00-059-3659	227	14
			321	6
			339	4
			373	3
			376	5
			410	14
			412	9
			416	12
			426	21
			427	18

CROSS-REFERENCE INDEXES

PART NUMBER INDEX

CAGEC	PART NUMBER	STOCK NUMBER	FIG.	ITEM
96906	MS51958-63	5305-00-059-3659	428	12
96906	MS51958-64	5305-00-059-3660	65	19
			92	14
			95	43
			218	5
			236	1
			253	7
			253	10
			253	18
			253	30
			255	9
			255	23
			259	5
			260	2
			262	13
			325	22
			426	17
			427	22
96906	MS51958-65	5305-00-059-3661	255	9
			255	17
			255	23
			255	28
			410	25
			412	19
96906	MS51959-81	5305-00-719-5021	339	14
			409	12
			411	16
			413	3
			415	3
			486	11
96906	MS51959-82	5305-00-719-5017	246	11
96906	MS51959-84	5305-00-719-5003	248	29
96906	MS51959-99	5305-00-763-7829	225	1
96906	MS51960-65	5305-00-071-1322	246	31
			410	29
96906	MS51960-70	5305-00-071-1327	316	10
			320	8
			320	20
			375	16
			378	16
80205	MS51964-65	5305-00-724-5812	333	20
96906	MS51965-29	5305-00-724-6783	368	9
96906	MS51967-12	5310-00-896-0903	170	23
			194	7
			195	9
			202	30
			425	10
			426	12
			427	11
96906	MS51967-15	5310-00-761-3706	283	10
			285	10

CROSS-REFERENCE INDEXES

PART NUMBER INDEX

CAGEC	PART NUMBER	STOCK NUMBER	FIG.	ITEM
96906	MS51967-18	5310-00-763-8919	165	6
			179	12
96906	MS51967-2	5310-00-761-6882	64	12
			252	9
			494	10
			495	14
96906	MS51967-3	5310-00-905-0762	213	11
			240	23
			311	14
			313	1
			315	12
			327	42
			425	9
			426	6
			427	10
			457	5
96906	MS51967-5	5310-00-880-7744	71	2
			209	5
			226	21
			230	5
			235	8
			236	6
			295	10
			363	13
96906	MS51967-6	5310-00-931-8167	41	25
			203	21
			204	9
			473	6
			474	9
96906	MS51967-8	5310-00-732-0558	44	4
			62	8
			75	42
			77	1
			89	9
			401	11
			490	15
96906	MS51967-9	5310-00-761-0654	16	26
			39	11
			205	34
			206	23
			286	8
96906	MS51968-15	5310-00-943-2141	271	5
			271	22
96906	MS51968-18	5310-00-763-8906	476	11
96906	MS51968-2	5310-00-768-0319	43	49
			62	27
			487	11
96906	MS51968-5	5310-00-880-7746	137	1
96906	MS51968-6	5310-00-905-4600	59	3
			136	14
96906	MS51969-5	5310-00-913-5474	70	8

CROSS-REFERENCE INDEXES

PART NUMBER INDEX

CAGEC	PART NUMBER	STOCK NUMBER	FIG.	ITEM
80205	MS51973-50	5305-00-728-6274	213	26
			214	21
96906	MS51987-117	5315-01-278-2123	292	21
96906	MS51988-8	5310-00-447-8774	103	2
			127	1
96906	MS521301A203R	4720-00-491-0102	BULK	29
96906	MS521301A203R 58		379	10
96906	MS521301A203R 7		379	32
96906	MS521301A203R 74		379	8
96906	MS521302B206R	4720-00-555-8015	BULK	30
96906	MS53000-1	2590-00-801-2355	51	8
96906	MS75021-2	5935-00-846-3884	83	35
			86	37
81249	MS7885/2-6-03		384	14
96906	MS87006-33	4030-00-948-7315	293	25
96906	MS87006-53	4030-00-916-2141	191	18
96906	MS90725-14	5305-00-071-2237	338	21
			339	16
			393	1
			413	8
			486	5
96906	MS90725-15	5305-00-071-2236	266	23
			401	14
96906	MS90725-31	5306-00-225-8496	180	13
96906	MS90725-33	5306-00-225-8498	213	9
			250	20
			418	4
			419	5
			420	3
			421	1
			422	1
			423	1
96906	MS90725-34	5306-00-225-8499	74	1
			153	27
			154	10
			205	31
			206	2
			206	18
			268	4
			329	11
			333	24
			339	20
			402	5
			409	1
			410	8
			411	1
			413	1
			414	7
			416	7
			418	6
			419	7

CROSS-REFERENCE INDEXES

PART NUMBER INDEX

CAGEC	PART NUMBER	STOCK NUMBER	FIG.	ITEM
96906	MS90725-34	5306-00-225-8499	420	1
			421	8
			422	3
			423	8
			428	7
96906	MS90725-36	5306-01-075-8519	209	12
			430	12
96906	MS90725-39	5306-00-225-8503	329	8
96906	MS90725-47	5306-00-225-8511	12	13
96906	MS90725-5	5305-00-068-0501	18	13
			118	12
			286	20
			307	9
96906	MS90725-58	5305-00-115-9526	72	1
			251	4
			251	4
96906	MS90725-6	5305-00-068-0502	19	16
			21	4
			50	11
			53	3
			58	9
			68	1
			70	9
			84	24
			93	16
			124	10
			125	10
			141	14
			155	2
			180	19
			203	11
			206	4
			208	14
			241	3
			244	16
			245	20
			250	16
			251	21
			252	1
			253	1
			254	1
			255	1
			267	9
			269	11
			270	5
			294	4
			313	9
			331	25
			333	9
			342	4
			343	14

CROSS-REFERENCE INDEXES

PART NUMBER INDEX

CAGEC	PART NUMBER	STOCK NUMBER	FIG.	ITEM
96906	MS90725-6	5305-00-068-0502	377	1
			384	13
			398	16
			399	13
			400	14
			410	30
			412	11
			416	3
			421	11
			422	11
			484	5
			492	9
			494	5
			495	11
			496	9
			497	5
			498	17
96906	MS90725-66	5305-00-269-3216	410	4
96906	MS90725-67	5305-00-269-3217	23	1
			24	13
96906	MS90725-94	5305-00-069-5578	398	3
96906	MS90726-162	5305-00-727-2283	437	8
96906	MS90726-34	5306-00-225-9089	280	45
			281	45
96906	MS90726-42	5306-00-225-9097	392	3
96906	MS90726-67	5305-00-269-2811	392	8
96906	MS90727-116	5305-00-719-5239	437	12
96906	MS90727-158	5305-00-726-2525	203	20
96906	MS90727-84	5305-00-709-8283	234	19
80204	MS90728-7		418	1
			420	9
			421	3
			422	5
			423	12
28666	MT161A	5330-01-282-2213	277	10
55719	MT95	4910-01-231-3671	499	7
19728	MZ-294		45	57
68505	MZ-414S	5310-01-214-7784	45	44
81349	M13486/1-11	6145-00-538-8219	BULK	82
			BULK	84
81349	M13486/1-14	6145-00-705-6674	BULK	86
81349	M13486/1-4	6145-01-341-9591	BULK	80
81349	M13486/1-5	6145-00-152-6499	81	17
81349	M13516/1-1	5925-00-026-4767	385	12
61465	M2025103	5310-00-167-0821	390	8
61208	M2046S	5310-00-595-7237	482	13
81349	M23053/15-112-0	5970-01-276-7753	BULK	44
81349	M23053/15-112-0-.75		94	7
81349	M23053/15-112-2		BULK	45
81349	M23053/15-112-2-.75		94	2

CROSS-REFERENCE INDEXES

PART NUMBER INDEX

CAGEC	PART NUMBER	STOCK NUMBER	FIG.	ITEM
81349	M23053/15-202-0	5970-01-359-7836	98	12
81349	M23053/4-103-0	5970-01-048-9378	485	4
81349	M23053/4-202-2		BULK	32
81349	M23053/4-202-2-2		95	23
81349	M23053/4-203-2		BULK	33
81349	M23053/4-203-2-3		95	13
81349	M23053/4-302-0	5970-01-161-6796	BULK	34
81349	M23053/4-302-0-.75		93	3
81349	M23053/4-302-2		BULK	35
			BULK	37
81349	M23053/4-302-2-2		95	8
81349	M23053/4-303-0	5970-01-142-2282	96	17
			BULK	36
81349	M23053/4-303-0-.75		93	5
81349	M23053/4-303-0-1		85	32
81349	M23053/4-303-2		96	8
81349	M23053/4-303-2-3		95	18
81349	M23053/4-304-0	5970-01-163-1103	BULK	38
81349	M23053/4-304-0-1		69	37
19207	M23053/4-304-2		474	12
			BULK	39
81349	M23053/4-304-2-4		95	11
81349	M23053/6-103-6		91	6
		5970-00-724-1910	BULK	40
81349	M23053/6-104-2	5970-01-049-9948	BULK	41
81349	M23053/6-104-2-4		91	3
81349	M23053/6-107-0		BULK	42
81349	M23053/6-107-0-7		90	4
			92	9
81349	M23053/6-107-1		BULK	43
81349	M23053/6-107-1-7		92	7
81349	M23469/2-30605	5320-01-333-5545	199	47
81349	M23469/2-50605		197	21
81349	M23469/2-50809		199	29
81349	M24066-2-354	5340-01-282-1115	311	15
81349	M24243/1-A403	5320-00-083-5009	270	17
			311	17
			317	8
			321	9
			325	18
			332	15
			354	13
			355	3
			376	8
			376	12
81349	M24243/1-A404	5320-01-023-2529	65	18
			198	1
			199	10
			225	22

CROSS-REFERENCE INDEXES

PART NUMBER INDEX

CAGEC	PART NUMBER	STOCK NUMBER	FIG.	ITEM
81349	M24243/1-A404	5320-01-023-2529	229	2
			316	8
			318	10
			324	15
			370	11
81349	M24243/1-A405	5320-01-029-8205	239	8
81349	M24243/1-B604	5320-00-493-4101	300	8
81349	M24243/1-D404	5320-00-865-8994	498	15
81349	M24243/1A402	5320-01-019-5694	355	3
			370	21
81349	M24243/1A403	5320-00-083-5009	373	7
81349	M24243/1A404	5320-01-023-2529	28	4
			320	6
			320	29
			324	37
02768	M36-0790-10	5325-01-257-0801	268	23
81349	M43436/1-3	9905-00-893-3570	41	5
			41	15
			44	15
			44	21
			44	26
			69	13
			69	22
			69	27
			69	38
			72	6
			72	18
			81	6
			81	12
			94	3
			474	13
			480	19
			480	28
			480	33
81349	M43436/1-4	9905-00-945-7637	86	2
			94	4
			480	14
81349	M43436/3-1	9905-01-013-8723	65	6
			65	14
			75	3
			76	3
			79	8
			80	3
			81	4
			81	10
			81	16
			83	2
			84	30
			85	2
			89	3
			90	3

CROSS-REFERENCE INDEXES

PART NUMBER INDEX

CAGEC	PART NUMBER	STOCK NUMBER	FIG.	ITEM
81349	M43436/3-1	9905-01-013-8723	91	4
			92	5
			93	7
			95	3
			96	3
81349	M45913/1-4CG5C	5310-00-088-1251	50	13
			169	12
81349	M45913/3-56G82		333	21
81349	M45913/3-6CG8P	5310-01-249-0904	461	5
81349	M5501/11-F1	5340-01-174-4894	394	3
81349	M5501/11-F5	5340-00-727-4774	394	1
81349	M5501/7-F2	5340-01-026-3250	203	10
			378	12
81349	M5501111-F7		394	2
81349	M6885/4-16H029		BULK	72
81349	M7885/2-6-04	5320-01-136-1782	229	5
81349	M7885/3-6-06-06		219	3
60038	M802048M802011	3110-00-406-9608	148	18
81349	M83461/1-020	5331-01-107-4950	6	2
81349	M83461/1-029	5331-01-336-3236	73	13
81349	M83461/1-030	5331-01-392-1793	73	11
81349	M83461/1-208	5331-01-392-0830	73	15
81349	M83461/1-236	5331-01-183-0971	6	8
81349	M85049/52-1-24W	5935-01-174-3669	75	19
60038	M88048-M88010	3110-00-854-1504	148	6
76761	N-3117	2920-01-415-9497	40	46
80205	NAS-1635-3LE12	5305-01-117-3396	376	9
80205	NASM24665-283	5315-00-842-3044	101	1
			243	23
			244	9
80204	NAS1080R06		197	20
80205	NAS1080R08	5320-01-044-7545	199	28
80205	NAS1146F0863P		251	46
80205	NAS1149F0863P	5310-01-396-8392	270	23
80205	NAS1329A3B80	5310-00-811-0966	291	4
			291	4
			297	4
			297	4
80205	NAS1329A3K280	5310-00-682-0775	257	6
80205	NAS1329A4B60	5310-01-481-4029	291	5
			291	5
			297	8
			297	8
80205	NAS1387-4	5940-00-113-9420	485	3
81343	NAS1464-050-10T	5340-01-450-8693	487	4
80205	NAS1635-3-12P	5305-00-442-7347	40	49
80205	NAS1635-3LE12	5305-01-117-3396	321	10
			325	12
80205	NAS1831A6E28	5340-01-248-2878	59	15
80205	NAS1922-0150	4730-01-322-9160	302	4
80205	NAS1922-0150-1	4730-01-322-9160	305	6

CROSS-REFERENCE INDEXES

PART NUMBER INDEX

CAGEC	PART NUMBER	STOCK NUMBER	FIG.	ITEM
80205	NAS1922-0150-1	4730-01-322-9160	306	4
			309	5
80205	NAS387-832-12P	5305-01-035-8766	74	9
80205	NAS453-10K75	5310-00-550-4725	256	7
80205	NAS561C4-18	5315-00-559-7467	99	13
80205	NAS601-12P	5305-00-813-2785	375	10
			375	25
80205	NAS9301BNS-4-04	5320-01-143-5079	369	15
80205	NAS9301BNS-6-02	5320-01-143-5075	208	13
80205	NAS9301BNS-6-03	5320-01-135-7319	278	1
			291	6
			291	6
			366	26
			368	5
			369	8
			379	21
80205	NAS9301BNS-6-04	5320-01-136-1782	64	2
			238	11
80205	NAS9301BNS-6-07	5320-01-085-9995	293	32
80205	NAS9302BNS-6-05	5320-01-136-1787	290	5
80205	NAS9302BNS-6-06	5320-01-086-1148	287	13
			290	3
80205	NAS9303B-6-03	5320-01-354-2547	220	5
80205	NAS9303B-6-04	5320-01-470-1545	197	16
80205	NAS9303B-6-06	5320-01-407-6239	197	16
81349	NN-P-530		BULK	51
89326	NTA2435	3110-00-580-3843	128	38
21335	NTA2840	3110-00-756-2022	128	44
76761	N1602-1	2920-01-466-1855	476	7
76761	N3106	2920-01-348-1526	40	46
76761	N3117	2920-01-415-9497	407	34
76761	N3119	2920-01-429-9591	407	34
76761	N7309	6115-01-349-5320	40	5
76761	N7312	2920-01-363-5173	40	2
76761	N7346		40	9
76761	N7347		40	11
76761	N7348		40	18
76761	N7370	4140-01-350-0839	40	41
76761	N7398		407	17
76761	N7399		407	29
76761	N7400		407	27
76761	N7401	2920-01-399-0794	407	43
76761	N7402		407	25
76761	N7433		407	17
76761	N7434		40	18
76761	N9005	5305-01-032-4165	40	16
			407	5
76761	N9008	5325-01-032-4222	40	13
76761	N9009	5325-01-034-2757	40	15
76761	N9010	3110-01-037-4661	40	14
76761	N9015	5310-01-046-0186	40	37

CROSS-REFERENCE INDEXES

PART NUMBER INDEX

CAGEC	PART NUMBER	STOCK NUMBER	FIG.	ITEM
76761	N9016	5310-01-032-4169	40	47
76761	N9018	5310-01-032-4827	40	48
76761	N9062	5310-01-232-1363	407	9
76761	N9063	5310-01-050-6565	40	6
			407	39
76761	N9077	5306-01-223-4345	40	39
76761	N9092	5310-01-390-5105	407	40
76761	N9098	5310-01-225-0701	40	3
76761	N9099	5310-01-165-1312	407	28
76761	N9256	5325-01-136-4880	407	21
76761	N9260	5325-01-136-7662	40	12
			407	19
76761	N9265	5310-01-136-4888	40	17
			407	6
76761	N9269	5365-01-225-0844	40	35
76761	N9318	5999-01-348-0302	40	19
76761	N9331	5310-01-232-1361	40	30
76761	N9338	5310-01-232-1362	40	40
76761	N9343	5310-01-232-6617	407	8
76761	N9385	3110-01-348-4867	40	10
			407	33
76761	N9393	5310-01-348-8384	40	43
76761	N9406	5310-01-362-6171	407	10
76761	N9408	5310-01-348-8386	40	33
76761	N9410	5310-01-348-8398	40	51
			407	13
76761	N9414	5920-01-348-0303	40	32
76761	N9416	5310-01-348-8360	40	44
			407	2
76761	N9417	3120-01-348-3364	40	20
76761	N9420	5970-01-350-5646	40	31
76761	N9426	5310-01-348-8313	40	38
76761	N9451	5315-01-348-6880	40	45
76761	N9452		40	4
76761	N9453	5310-01-348-8314	40	28
76761	N9455	5310-01-348-8385	40	36
76761	N9457	5306-01-348-8310	40	24
76761	N9459	5310-01-348-8393	40	25
76761	N9460	5365-01-348-6971	40	34
76761	N9461	5310-01-348-8392	40	29
76761	N9464	5975-01-350-1987	40	21
			407	37
76761	N9465	5310-01-350-8549	40	23
			407	36
76761	N9467	5310-01-350-4257	40	22
			407	46
76761	N9486	3130-01-396-8388	407	20
76761	N9491	4140-01-397-2228	407	38
76761	N9493	5340-01-396-3950	407	7
76761	N9494	5325-01-396-4320	407	18
76761	N9500	5975-01-358-0021	40	27

CROSS-REFERENCE INDEXES

PART NUMBER INDEX

CAGEC	PART NUMBER	STOCK NUMBER	FIG.	ITEM
76761	N9502	2920-01-475-3180	40	19
06968	ORD-112	5330-01-197-8298	268	15
			295	6
73165	OS34400	5330-01-310-6780	4	27
9G287	P-100	2530-00-848-4581	167	12
9G287	P-450	6670-01-261-6847	167	12
9G287	P-500	6670-01-262-8647	167	12
9G287	P-550	6670-01-263-2268	167	12
61424	PFT-6B	4720-01-169-9891	BULK	15
			BULK	18
61424	PFT-8B-BLK	4720-01-003-6706	BULK	20
73370	PH13	2940-00-082-6034	6	7
00198	PK379	5315-00-816-1794	165	7
			166	7
06383	PLT2S	5975-01-128-0390	345	7
16941	PL25D02P12	5305-01-210-6249	321	1
16941	PL25D040P12	5305-01-198-3385	323	2
			323	7
			324	22
			324	34
			326	2
16941	PL25D040P8	5305-01-206-7217	324	21
			324	33
			375	20
16941	PL25J02P12	5305-01-199-3371	266	13
			317	9
			318	5
16941	PL25J02P20	5305-01-198-1619	324	11
			324	25
80063	PPL-10323	5820-01-222-1107	414	KITS
80063	PPL-10324	5820-01-222-1106	416	KITS
68505	PS-1475SS	2920-01-290-9245	45	17
82647	PSA-25	5925-01-373-1034	367	12
58727	PT1		467	12
77445	PWA10132-3	5310-00-225-6993	188	32
21335	P207K	3110-00-155-6152	148	13
61424	P4EUB-4	4730-01-298-4363	401	3
65035	P49866-11	5310-00-637-9541	206	22
81755	P5006-4G	4020-00-246-0688	BULK	3
81755	P5006-4G-9		72	11
			72	22
			73	8
21335	QAR29523	3110-00-689-4076	128	2
81343	QQ-A-250/11		BULK	49
09094	QRP3C0855	5315-01-197-7563	275	8
77252	QR816	5310-00-007-1607	283	12
71843	R-2423-A	2510-01-264-6546	211	13
			212	14
26051	R-451-N		BULK	5
81343	R-495-T		BULK	62
83065	RB1450-1-4IDX1-2 0D	4720-00-684-4033	BULK	19

CROSS-REFERENCE INDEXES

PART NUMBER INDEX

CAGEC	PART NUMBER	STOCK NUMBER	FIG.	ITEM
34623	RCSK-18685	3020-01-444-5447	38	8
34623	RCSK17028-1	2520-01-421-4589	146	1
34623	RCSK17028-2	2520-01-423-1947	139	1
34623	RCSK17028-3	2520-01-421-4588	139	1
34623	RCSK17089-1	2530-01-420-7892	152	6
34623	RCSK17089-2	2530-01-420-7893	152	6
34623	RCSK17122	5340-01-432-4877	182	15
34623	RCSK17215	2530-01-420-8025	KITS	9A
34623	RCSK17249	2530-01-420-8634	144	20
			152	20
34623	RCSK17250	2530-01-420-7895	144	20
			152	20
34623	RCSK17712	5342-01-446-8954	36	3
34623	RCSK17805		160	4
34623	RCSK17810	2540-01-410-8789	51	10
34623	RCSK18220	3020-01-473-2048	36	8
34623	RCSK18221	3020-01-442-7278	34	21
34623	RCSK18268	2920-01-444-2749	38	11
34623	RCSK18278-6	2590-01-444-3317	33	9
34623	RCSK18330	2530-01-460-2439	175	1
34623	RCSK18434-2	4720-01-442-9875	160	1
34623	RCSK18434-3	4720-01-443-3033	160	1
			160	16
34623	RCSK18435-2	4720-01-443-8487	162	25
34623	RCSK18435-3	4720-01-443-3481	162	9
34623	RCSK18530		188	25
34623	RCSK18531	5340-01-476-2963	188	26
34623	RCSK18532	5340-01-476-2972	188	36
34623	RCSK18596	5340-01-476-5072	188	30
34623	RCSK18626	3020-01-458-0176	33	5
34623	RCSK18627	3020-01-458-0185	33	3
34623	RCSK18628	3020-01-462-1202	33	4
34623	RCSK18639	5330-01-476-9732	180	22
34623	RCSK18683	5365-01-480-5282	33	19
34623	RCSK18686	3020-01-444-2311	175	3
34623	RCSK18690	3020-01-444-1665	33	18
34623	RCSK18747-1	5340-01-476-2845	188	33
34623	RCSK18747-2	5340-01-476-2840	188	33
34623	RCSK18809	2510-01-477-3968	180	24
34623	RCSK18810	2510-01-477-3949	180	3
34623	RCSK18848		180	21
34623	RCSK19027	5305-01-477-1867	180	25
0ALB6	RC01A008-07-05	4730-01-455-1231	466	3
			467	2
0ALB6	RC01A009-07-04	4730-01-455-1259	466	2
0ALB6	RC01A010-07-08	4730-01-455-1276	466	1
01276	RC01C-008	4820-01-461-1703	466	6
0ALB6	RC01C-009	4820-01-455-5021	466	8
0ALB6	RC01D007-07-04	4730-01-455-1220	467	3
27182	RD-860066	5342-01-266-5689	211	2
01276	REO1-0002-0720	4720-01-456-6674	466	5

CROSS-REFERENCE INDEXES

PART NUMBER INDEX

CAGEC	PART NUMBER	STOCK NUMBER	FIG.	ITEM
01276	REO1-0003-0360	4720-01-456-6729	466	9
14429	RESINITEEP69C	5970-00-221-5301	44	20
			69	21
			69	26
			72	5
			313	17
01276	RE01-0001-0720	4720-01-458-3326	466	10
01276	RE01-0003-0720		466	7
81348	RR-C-271-6		191	17
33287	RS-3400-135		505	10
33287	RS-5700-125		505	13
33287	RS-5701-795		505	12
58261	RTCO-2619	4820-01-189-2107	333	37
35510	R027096300	2920-01-199-2391	404	2
35510	R027100150		39	35
35510	R055101472	5998-01-147-7895	39	74
78225	R17	2930-01-426-7711	27	2
7V826	S-010	5975-01-299-2468	BULK	52
81343	S-2 430260		388	6
82484	S-3076	3120-01-432-1474	327	7
82484	S-3087	3120-01-388-1527	327	8
81343	SAE J1508	4730-00-071-7890	327	25
81343	SAEJ1120		487	12
9D117	SAEJ562		480	20
9D117	SAEJ562/3/4		474	14
19728	SAT-1004F		45	31
68505	SAT-1004FS	2920-01-192-4474	KITS	
19728	SAT-1014B		45	35
19728	SAT-32		45	32
19728	SAT-40		45	37
19728	SAT-46		45	28
19728	SAT-47		45	26
19728	SAT-48		45	24
19728	SAT-52		45	25
68505	SAT4108UT	5945-01-210-1299	45	20
68505	SAV-1008A	2920-01-184-1054	45	21
53964	SA609010	5305-01-190-4073	19	2
28520	SB-750-625-2840	5975-01-211-3142	17	11
			153	18
			379	48
80063	SCD13617-8	5310-00-809-5998	33	2
27737	SCE-2012	3110-01-155-9862	128	37
27737	SCE-2416	3110-01-155-4440	128	1
53964	SC220072		19	7
99587	SC300079		19	5
53964	SC300081		19	9
34623	SF-5583585		99	10
34623	SF-5590748	2510-01-203-9873	278	14
34623	SF-5595841	2510-01-252-4466	227	10
34623	SF-5597223		302	8
			305	4

CROSS-REFERENCE INDEXES

PART NUMBER INDEX

CAGEC	PART NUMBER	STOCK NUMBER	FIG.	ITEM
9C234	SF-5597234	4730-01-265-3166	302	10
34623	SF-5597692	5640-01-309-3866	200	4
34623	SF-5597693	5640-01-309-3870	200	3
34623	SF-5597695	2530-01-285-8381	169	23
34623	SF5575898		71	7
34623	SF5575925	5330-01-197-3620	208	31
34623	SF5581351	2510-01-189-3460	324	10
34623	SF55817-23		375	12
34623	SF5581723	2510-01-197-5546	378	11
34623	SF5581724	2510-01-197-5547	375	12
			378	11
34623	SF5585243		327	49
34623	SF5585258		327	24
34623	SF5589377	2540-01-276-5928	289	11
34623	SF5590706		225	17
			226	7
17168	SF5592171	2540-01-265-1137	224	11
34623	SF5597161	2510-01-281-1032	228	6
34623	SF5597214		303	5
			304	10
			309	8
34623	SF5597215		309	9
34623	SF5597216		305	10
34623	SF5597217		309	11
34623	SF5597218		309	3
34623	SF5597219		309	7
34623	SF5597221		309	13
34623	SF5597226		310	1
34623	SF5597227		309	12
34623	SF5597228		309	1
34623	SF5597229		306	2
34623	SF5597230		306	7
34623	SF5597231		306	10
34623	SF5597232		310	3
34623	SF5597606	2540-01-271-2832	290	2
34623	SF5597714	5340-01-277-5129	258	3
			259	6
			260	19
			262	14
34623	SF5597721	4730-01-270-7931	301	8
34623	SF5597723		304	4
34623	SF5597725		302	2
34623	SF5597744	4730-01-265-3284	302	5
			305	7
34623	SF5597957		303	16
34623	SF5597958		302	9
			303	2
34623	SF5597970		310	9
34623	SF5597994		216	7
34623	SF5597995		216	9
34623	SF5597997		221	6

CROSS-REFERENCE INDEXES

PART NUMBER INDEX

CAGEC	PART NUMBER	STOCK NUMBER	FIG.	ITEM
34623	SF5597998		221	7
34623	SF5597999		221	1
34623	SF5598000		221	2
34623	SF5598029		222	25
34623	SF5598030		222	1
34623	SF5598031		222	2
34623	SF5598033		222	21
34623	SF5598034		222	3
34623	SF5598035		222	8
34623	SF5598036		222	5
34623	SF5598062		222	15
34623	SF5598063		222	19
34623	SF5598064		222	18
34623	SF5598065		222	17
34623	SF5598132		302	11
34623	SF5598133		302	12
34623	SF5598134		302	7
			305	9
34623	SF5598239		495	5
34623	SF5598240		495	6
34623	SF5598242		495	2
34623	SF5598243		495	8
34623	SF5598815		495	7
34623	SF5598816		495	1
34623	SF5598821		495	4
34623	SF5934157	9330-01-276-1470	287	8
34623	SF5934158	2540-01-270-6459	219	5
			290	7
34623	SF5934173	5340-01-270-8432	260	18
34623	SF5934182	5330-01-265-8808	213	32
34623	SF5934196	5340-01-271-1846	211	22
			212	20
34623	SF5934202	4720-01-270-9616	303	7
66295	SIZE 83	4730-01-092-1904	332	9
66295	SIZE83	4730-01-092-1904	331	2
00334	SK2155	6685-00-618-1822	363	28
53421	SNP-22	4730-01-239-5251	303	12
53421	SNP22		301	3
4V120	SP-067-500-24540 SS-E	5360-01-260-0700	154	9
7Z588	SP-311	2590-01-212-5868	488	1
08484	SP1548-1	5310-00-112-2233	39	12
55719	SRES18	5120-01-367-3582	505	2
55719	SRES24	5120-01-367-3585	505	2
19728	SS-88A		45	36
11815	SSLQ-68"Q"	5320-01-255-6608	202	4
11815	SSP-43	5320-01-221-4231	274	30
06383	SST1M-C0	5975-00-903-2284	98	6
08718	SS2R-120-1804-00 0	5935-01-149-5165	79	6
08718	SS4R-120-1806-00 0	5935-01-154-6233	79	5

CROSS-REFERENCE INDEXES

PART NUMBER INDEX

CAGEC	PART NUMBER	STOCK NUMBER	FIG.	ITEM
03481	S10P175	5310-01-198-1723	254	18
			263	3
			264	6
03481	S10P196	5310-01-210-7935	224	6
25472	S10P320	5310-01-197-6253	254	26
			287	6
70318	S147-1	5310-00-933-8118	282	15
76385	S1608	5325-00-174-9038	70	1
03481	S31P280	5310-01-198-1724	197	4
			417	8
			430	18
25472	S4P90	5310-01-388-7420	274	19
27182	S450XXLXBZXX	5342-01-265-1129	293	27
27182	S4501XRXBZXX	5342-01-266-7559	289	8
27914	S45043-3405	5310-00-934-9748	282	16
72794	S7-250	5325-00-449-3001	208	5
17875	T-18	2640-00-555-2834	167	11
59875	TD97203	5325-00-263-6651	79	25
56501	TG11	5940-00-705-6711	75	16
			76	16
			80	4
			81	18
			83	1
			86	36
56501	TG14	5940-00-705-6714	75	2
56501	TG15	5940-00-705-6715	75	15
			76	15
56501	TG2	5940-00-705-6702	86	35
56501	TG3	5940-00-705-6703	75	17
			76	17
			93	10
56501	TG33	5940-00-735-5520	44	13
			44	19
			44	24
			69	11
			72	16
			480	26
56501	TG8	5940-00-705-6708	75	7
			76	10
			80	6
			83	4
			85	21
			86	14
			87	3
56501	TG9	5940-00-705-6709	76	5
			85	30
			86	20
			89	6
55719	TLE60	5120-01-227-3159	505	3
82458	TLNF-0832-S	5310-01-165-1312	40	8
60380	TRA 2840	3110-00-055-2100	128	45

CROSS-REFERENCE INDEXES

PART NUMBER INDEX

CAGEC	PART NUMBER	STOCK NUMBER	FIG.	ITEM
09527	TS6058	6620-01-194-6586	66	11
71124	TURB0LEX76B	5970-00-221-5301	69	12
			72	17
96508	TW6B	5120-00-683-8597	505	5
81348	TYIV/CL1/TRVC8	2640-01-098-2029	167	21
81348	TYV/CL2/TR C1	2640-00-050-1229	167	22
56501	TY25M0	5975-00-984-6582	470	7
83553	T048-270-250L	5360-01-101-2143	245	13
28666	T2H2-38P2	3110-01-457-9711	277	9
53421	T30MR-0	5975-01-299-7781	52	7
			57	6
14557	U-6236	5340-01-197-8239	269	25
59199	UM5008	4730-00-954-1251	141	10
92830	U500-0113	5310-01-105-9398	293	8
68505	VSF-16	5310-01-214-7785	43	30
80604	W-129-B	4910-00-105-2823	502	6
78940	W-250D53	2940-01-188-3776	12	25
99017	W-4	5340-01-242-6245	235	14
99017	W-5	5340-01-255-1657	203	24
08484	WA-1429-10	5305-00-984-6210	299	1
			430	7
34623	WA12338223	2510-01-413-8045	182	17
34623	WA12338230	2510-01-466-3752	182	11
81348	WW-C-440B TYPE E 1/2	4730-00-267-8945	401	2
81348	WW-C-4408		399	16
81348	WW-P-471ACABCB	4730-00-954-1281	5	1
			436	4
81349	WW-P-471ACABUA	4730-01-166-2244	105	11
81349	WW-P-471AQABUA	4730-01-166-2244	104	3
66295	WWD48-58H	4730-00-908-3193	301	4
			303	6
			304	2
			364	3
			365	10
			368	14
79470	W21204	4730-00-897-5497	178	19
			334	12
			366	10
			385	11
27647	W6000HMV	2590-01-179-7602	313	12
19728	X-3508		45	33
19728	X-3925SC		45	62
19728	X-4059		43	19
19728	X-4070		43	12
80293	X-4071		43	17
19728	X-4328		43	21
19728	XA-1316		43	7
			43	13
19728	XA-1317		43	16
68505	XA-1642	5330-01-209-7669	45	3

CROSS-REFERENCE INDEXES

PART NUMBER INDEX

CAGEC	PART NUMBER	STOCK NUMBER	FIG.	ITEM
19728	XA-744AP		45	52
19728	XA-744AV		43	8
			43	22
19728	XA-744AW		43	24
19728	XA-744AY		43	10
19728	XA-744Z	5331-00-137-3450	45	9
78553	XAN-262-H	5325-01-166-6324	128	74
13940	XB78323-05001	5325-00-823-5999	198	2
			199	11
			225	23
			239	9
			317	7
			321	8
			325	19
			373	6
			376	7
			376	11
63829	XX1		491	2
63829	XX3		491	21
63829	XX4		491	20
63829	XX5		491	19
63829	XX6		491	5
63829	XX7		491	7
63829	XX8		491	12
63829	XX9		491	11
63829	X10		491	3
63829	X11		491	6
63829	X12		491	25
63829	X13		491	27
63829	X14		491	14
63829	X15		491	15
63829	X16		491	16
63829	X17		491	18
63829	X18		491	13
14351	X601	5315-00-842-3044	97	6
			99	18
			133	9
			153	13
			202	39
			205	21
41885	X91427	2530-01-417-4908	167	14
74545	Y-11296	5305-01-276-4870	57	1
76385	ZB-1079M.I.	5340-01-203-8675	272	20
			280	17
			281	17
76385	ZX-2024	5330-01-275-3381	296	8
76385	ZX-4597	9390-01-282-9949	296	7
35510	Z0982-75723	5310-01-143-1679	39	45
35510	Z106005179	5305-00-777-2284	39	57
35510	Z1110-74821	5305-01-080-9109	406	6
35510	Z116 096169	5920-01-275-8096	39	58

CROSS-REFERENCE INDEXES

PART NUMBER INDEX

CAGEC	PART NUMBER	STOCK NUMBER	FIG.	ITEM
35510	Z116095517	5305-01-147-5864	39	52
62226	0.1581	2540-01-381-9331	231	20
11153	0-130105-0012	5340-01-265-8921	262	8
78940	0-952A59	5310-01-211-5037	12	26
60602	000-02136-0024	2520-01-244-9863	100	1
76760	00015105	5340-01-290-6234	128	65
			129	37
76468	01-05479	5977-00-008-3338	KITS	1
			KITS	10
81834	01-6201-93	6220-01-216-5285	64	5
81343	010203CA		368	29
55787	012351	5325-01-135-4290	268	35
21439	01857-007	5310-00-768-0318	363	20
77060	0298 4033	5975-01-469-5558	76	21
			472	9
			475	5
			476	6
70082	0441-A	2540-01-314-1190	329	3
70082	0442-A	2540-01-314-1189	329	3
34723	05597172	5340-01-186-1817	157	10
34623	05705689	5895-01-197-5467	412	KIT
34623	06005119	2530-01-421-2563	170	10
34623	06009350	5365-01-414-2895	143	31
			151	31
35510	075884	5306-01-152-4849	406	27
09647	07687-2	6150-01-361-8129	74	10
58132	08084	5305-01-221-7734	286	2
7X677	08656394		365	18
7X677	08689960	2520-01-408-4785	102	1
34281	091247-01	5310-01-185-8690	157	19
			158	16
34281	092554-01		157	12
		5330-01-184-5421	158	8
34281	096496-01	5305-01-185-8672	157	18
			158	17
34281	099912-01	5305-01-185-8657	157	17
			158	1
81221	1-0153	2520-00-722-7074	KITS	130
55026	1-112757	5940-00-050-7106	79	11
80813	1-236-005	5355-01-298-8571	280	44
			281	44
30780	1-4SHP-S	4730-00-044-4577	15	7
77820	10-042622-23S	5935-00-614-3959	86	3
28839	10-35936-7	5305-00-543-4709	337	2
77820	10-40704-22	5310-00-595-7486	183	3
			185	13
			187	17
			188	15
77820	10-40817-010		85	13
			86	18
77820	10-42622-235	5935-00-614-3959	80	7

CROSS-REFERENCE INDEXES

PART NUMBER INDEX

CAGEC	PART NUMBER	STOCK NUMBER	FIG.	ITEM
77820	10-42622-235	5935-00-614-3959	85	7
81834	10-7005-06	6695-01-216-8687	64	9
96881	10L18F	3120-01-191-3232	99	23
			133	8
35510	100204	6150-01-269-1857	39	46
35510	100209	6150-01-335-3087	39	79
35510	100210	5340-01-270-8484	39	49
35510	100212	5340-01-272-2677	39	34
24975	100276	5330-01-272-7454	39	4
7X677	10054241	5330-01-096-7699	78	2
98853	100828-HN37	5940-01-443-9580	95	4
54905	10084	5340-01-426-3850	307	14
			308	2
91094	100951-D02	5940-01-269-1816	89	4
70898	100951X031-012-028	5310-00-641-9464	251	5
7X677	10137486	5330-01-150-5944	10	1
7X677	10137488	5330-01-149-0874	30	12
7X677	10137492	5330-01-147-9808	31	4
28891	101450-S02	5940-01-214-4563	79	10
7X677	10149551	4710-01-314-4489	11	30
7X677	10149552	4710-01-314-4483	11	11
7X677	10149553	4710-01-314-4488	11	28
7X677	10149554	4710-01-316-0222	11	12
7X677	10149555	4710-01-314-4487	11	18
7X677	10149556	4710-01-314-4485	11	16
7X677	10149557	4710-01-314-4486	11	23
7X677	10149558	4710-01-314-4484	11	17
34623	10163716		11	24
60602	10166	5315-01-284-9812	21	13
7X677	10183956	4730-01-445-2358	30	15
18876	10189683	5315-00-255-5580	268	6
19207	10192299	5340-01-197-2717	268	7
19207	10192302	5340-01-197-1444	268	12
18876	10224818	5325-00-886-1067	247	8
7X677	10243629		30	14
31007	10332B	5310-00-584-5272	434	3
			435	7
7X677	103384	5315-01-191-2611	133	4
34281	103700-01	2530-01-204-2583	158	2
			158	2
34281	103700-02	2530-01-207-6256	158	2
			158	2
34281	103706-05		158	7
			158	7
34281	103706-06		158	7
			158	7
34281	10371009	2530-01-185-6714	158	9
34281	103712-01		157	14
		2530-01-185-7998	158	10
70655	10392	5315-01-280-6185	230	9

CROSS-REFERENCE INDEXES

PART NUMBER INDEX

CAGEC	PART NUMBER	STOCK NUMBER	FIG.	ITEM
70655	10392	5315-01-280-6185	287	23
22075	10453002	2530-01-314-1129	157	22
			158	12
			158	12
34281	104534-01	2530-01-185-6713	157	20
			158	15
7X677	10478133	2920-01-397-7094	119	11
7X677	10478142	2520-01-411-6540	119	13
7X677	105455	5330-01-155-4393	128	70
51376	1059-06607-01	4810-01-192-5817	177	5
60602	10618		21	12
01989	1062X6X4	4730-01-184-4760	141	25
27767	106397-03	2530-01-253-2825	157	16
			158	11
33116	106397-04		157	16
			158	11
79470	1064X4	4730-01-003-5105	123	4
			141	23
			149	12
			313	8
			399	6
79470	1064X6X6X4	4730-01-476-0850	13	13
			14	20
79470	1065X4	4730-01-058-0900	149	11
01989	1065X6	4730-01-211-0896	18	7
01989	1068X4	4730-01-185-5348	12	41
			135	3
			141	26
			149	14
			399	4
01989	1069X4	4730-01-070-7680	12	40
			149	6
			399	3
01989	1069X4X1	4730-01-195-3803	400	7
79470	1069X6	4730-00-041-2526	30	19
34281	106980-02	2530-01-185-6712	157	23
			158	13
01989	1077X4	4730-01-192-8086	141	19
34281	108037-01	5365-01-186-7233	158	3
34281	108039-01	3120-01-186-7181	158	4
58538	10812	4010-01-203-0412	270	4
7X677	108597	5306-01-164-8486	118	9
19207	10896651	9905-01-032-7002	394	4
51377	1090-06404-01	2930-01-168-7870	34	2
19207	10918603	5310-00-877-5975	398	9
19207	10929868	2920-00-909-2483	35	6
34281	109413-01	4820-01-186-0822	159	2
34821	109433-01		157	6
34281	109457-01	5305-01-276-4855	157	1
19207	10948233	5930-00-679-5925	345	15
			348	38

CROSS-REFERENCE INDEXES

PART NUMBER INDEX

CAGEC	PART NUMBER	STOCK NUMBER	FIG.	ITEM
19207	10948235	5330-00-089-0978	345	20
79470	110-03604	4730-00-789-0951	177	3
			178	1
24617	110200	4730-00-266-0536	366	12
			366	14
34281	11021	2530-01-179-7511	KITS	
81100	110401-8SS	5310-00-933-8119	482	18
16764	1116968	2920-00-848-3292	380	15
17773	11176106-5	5340-00-150-1658	83	23
			488	10
62161	1118BAC1048		505	8
01989	112-06136	4730-01-184-6971	159	8
			161	9
78189	112-1008800-003	5305-01-204-6502	25	5
			51	6
			83	6
			335	6
52304	113324	5305-00-071-2069	283	5
			417	16
24617	11500161	5310-01-416-5447	101	6
7X677	11500177	5310-01-185-7218	138	19
			139	16
			145	19
			146	16
7X677	11500207	5310-01-206-7306	12	21
			30	8
			33	11
			36	19
			37	14
			38	19
			41	9
			42	10
			66	7
			75	31
			77	9
			174	2
			364	6
			379	37
			408	11
			408	25
			472	2
			473	10
			474	4
			475	14
			476	16
			480	8
			490	7
7X677	11500256	5310-01-210-1587	8	13
			12	19
			30	7
			36	17

CROSS-REFERENCE INDEXES

PART NUMBER INDEX

CAGEC	PART NUMBER	STOCK NUMBER	FIG.	ITEM
7X677	11500256	5310-01-210-1587	37	13
			38	17
			41	10
			408	37
			472	3
			473	11
			474	3
			475	16
			476	22
24617	11500324	5310-01-204-6745	490	12
24617	11500362	5310-01-394-9280	370	10
24617	11500713	5306-01-289-9197	108	1
24617	11500749	5310-01-165-3331	7	8
7X677	11500815	5305-01-149-1938	31	8
			31	8
7X677	11500827	5305-01-254-2521	174	9
24617	11500831	5306-01-165-4283	30	10
			128	23
			130	19
7X677	11500921	5306-01-150-1190	31	12
73342	11501033	5310-01-143-0512	127	14
24617	11501619	5306-01-473-1895	33	10
7X677	11501940	5306-01-206-7172	66	8
			77	24
			79	18
24617	11503428	5306-01-152-4696	128	21
			130	21
7X677	11503617	5305-01-150-1521	11	14
7X677	11503639	5310-01-155-2503	10	6
7X677	11503739	5310-01-158-6257	75	36
			77	17
24617	11503870	5306-01-474-6117	120	18
24617	11503962	5310-01-444-3084	77	16
7X677	11504512	5306-01-148-3667	11	6
24617	11504594	5306-01-447-2568	33	13
7X677	11504596	5306-01-243-4650	175	2
24617	11504617	5306-01-432-7900	33	12
24617	11504726	5975-01-475-3442	227	46
24617	11504986	5306-01-152-4693	22	1
7X677	11505068	5305-01-148-5915	8	4
7X677	11505074	5306-01-411-2342	101	7
73342	11505328	5305-01-360-1136	30	12
			33	15
7X677	11505885	5325-01-196-5631	245	8
24617	11505922	5310-01-315-1535	379	38
7X677	11508353	5306-01-253-7073	4	19
7X677	11508534	5306-01-230-3354	4	21
7X677	11508600	5306-01-165-5582	4	12
24617	11508687	5306-01-197-1492	108	1
7X677	11509669	5306-01-151-4925	9	6
24617	1150967	5305-01-149-9673	31	11

CROSS-REFERENCE INDEXES

PART NUMBER INDEX

CAGEC	PART NUMBER	STOCK NUMBER	FIG.	ITEM
7X677	11513606	5306-01-185-7048	138	18
			139	15
			145	18
			146	15
			175	10
7X677	11513697	5306-01-474-8959	119	10
7X677	11514308		105	10
7X677	11514347	5325-01-480-7331	117	17
7X677	11514603	5310-01-155-2503	7	5
			75	27
			101	4
7X677	11515262	5306-01-476-3500	120	16
7X677	11515756	5306-01-465-2140	105	19
7X677	11516230	4730-01-444-0701	30	13
24617	115774		481	5
19207	11595179	5120-00-880-4268	503	4
7X677	116000	5310-01-187-0678	374	15
34623	11602903	2540-01-317-4289	395	10
34623	11608950-1	4730-01-413-8244	27	6
			125	9
19207	11608950-13	4730-00-908-6292	24	2
19207	11608950-18	4730-01-296-9318	337	4
19207	11608950-6	4730-00-278-2523	331	30
19207	11609693-1	2540-00-104-2889	389	2
19207	11609942	5340-01-320-8662	387	11
19207	11613631	5945-00-789-3706	49	9
19207	11614131	5930-00-134-5036	46	11
19207	11614131-1		46	16
19207	11614156	6220-00-880-1624	60	4
19207	11630585	9905-01-181-9456	357	3
19207	11639519-1	5331-00-463-0200	60	10
19207	11639519-2	5331-00-462-0907	61	11
19207	11639541		60	5
19207	11639546	6220-00-179-4325	60	9
19207	11643398	9905-00-198-2728	354	2
19207	11644801	7690-00-138-5788	362	1
19207	11646803		406	9
19207	11646804		406	23
19207	11646896		406	13
19207	11646897	3110-00-343-4477	406	24
19207	11646898		406	4
19207	11646899		406	21
19207	11646900	5977-01-082-3613	406	18
19207	11646901	2920-00-114-2945	406	26
19204	11646902	3110-00-343-4474	406	10
19207	11655788-2	5120-00-240-8702	505	4
19207	11663000	4730-00-150-6118	11	9
19207	11663057	5930-00-345-5455	345	10
			348	14
19207	11663058	4810-00-248-1635	348	40
19207	11663061	5905-00-251-7145	348	4

CROSS-REFERENCE INDEXES

PART NUMBER INDEX

CAGEC	PART NUMBER	STOCK NUMBER	FIG.	ITEM
19207	11663062-1	9390-01-070-5959	351	4
19207	11663279	5930-00-207-9422	51	3
19207	11668591	5935-01-184-6417	85	24
			86	15
19207	11668932	6220-01-094-1440	62	1
19207	11668979	5310-01-100-2067	62	5
19207	11669531	5935-01-314-2084	380	9
19207	11669705	2540-01-125-6154	388	16
19207	11669898	2540-01-194-3323	387	4
19207	11675004	5340-01-059-0114	72	9
24617	117212	5310-00-568-6077	100	12
76760	11797	5306-01-359-4530	130	2
94222	12-11014-12	5310-00-880-9344	216	5
			221	5
94222	12-12-404-11	5305-01-185-2211	216	8
			221	4
68505	12-333	2920-01-168-4131	43	27
96881	12L18F	3120-00-485-1017	165	3
19728	12X-195		43	25
68505	12X-196		43	35
			43	57
19728	12X-198		45	80
19728	12X-201		45	58
71468	120-1805-000	5935-01-153-9320	76	13
77060	12004436	5940-01-341-7689	93	2
34281	120100-07		157	7
34281	120100-08		157	8
34281	120100-09		157	13
34281	120100-10		157	11
72582	120217	5310-00-922-2017	64	15
			64	25
			67	3
			225	49
			226	29
			370	17
			465	3
			487	3
12204	120375	5310-00-584-5005	468	9
24617	120380		228	14
			387	8
			481	7
24617	120384	5310-00-482-9493	33	6
		5310-00-011-6121	472	12
			475	20
			476	18
			481	3
24617	120391		197	35
			232	2
24617	120392	5310-01-103-6042	198	8
			198	14
			481	8

CROSS-REFERENCE INDEXES

PART NUMBER INDEX

CAGEC	PART NUMBER	STOCK NUMBER	FIG.	ITEM
81306	120393	5310-01-308-0131	199	8
21450	120487	4730-00-043-3750	345	34
			348	34
24617	120528	5340-01-166-1672	25	2
			103	5
77060	12078084	5935-01-443-9124	86	29
77060	12084912	5940-01-442-6298	86	31
79410	12093		329	6
7X677	12143072	6150-01-470-2009	78	1
34281	1215567-01	5340-01-265-8883	157	2
77060	12160490	5935-01-445-5599	86	30
77060	12160494	5935-01-445-5144	86	32
27767	12173601-01	2530-01-333-8263	157	5
27767	12173602	2530-01-333-6068	157	5
34271	121743-01		157	15
7X677	12181688	6150-01-470-2016	78	1
7X677	12181863	6150-01-470-2011	78	1
41024	12214139	5305-01-282-3386	224	9
19207	12255608	5315-01-094-9025	403	11
19207	12258931-2	6680-01-148-8875	66	4
34345	12258932-6	6685-01-167-4298	67	1
19207	12265594	5895-01-050-2072	274	20
19207	12267802	5330-01-080-3253	104	15
19207	12275161	2540-01-123-1218	368	16
19207	12296696-2	5305-01-271-1806	191	11
19207	12298661	5340-01-110-4036	245	28
			478	5
43689	123-4497645 PIEC E 8	5310-01-126-4751	178	20
19207	12300715-1	5325-01-175-7442	387	13
19207	12301363	2540-01-200-1994	375	17
19207	12301363-1	2540-01-200-1994	316	9
			378	17
19207	12301363-2	2540-01-203-7721	316	9
			320	9
			324	12
			375	17
			378	17
19207	12301365	2540-01-200-1995	316	14
			320	12
			320	24
			324	19
			324	31
			375	22
			378	22
7X677	123153	5310-01-185-4672	137	17
19207	12331924-6		231	10
11862	12337210		KITS	
7X677	12337891	4730-00-166-9178	30	13
7X677	12338062	5310-01-148-2687	129	35
19207	12338064	8145-01-231-3747	363	1

CROSS-REFERENCE INDEXES

PART NUMBER INDEX

CAGEC	PART NUMBER	STOCK NUMBER	FIG.	ITEM
19207	12338065		363	9
19207	12338066		363	4
19207	12338067	5340-01-271-3059	363	7
19207	12338068	5340-01-264-6544	363	6
19207	12338070	5342-01-264-6543	363	22
19207	12338071	5340-01-265-3676	363	18
19207	12338072	7690-01-281-8341	357	6
19207	12338073	5330-01-264-6537	363	5
19207	12338074	5340-01-264-6540	363	8
19207	12338075	5340-01-264-6541	363	25
19207	12338076	5340-01-265-3674	363	26
19207	12338078	2520-01-268-1051	363	2
19207	12338084	5325-01-205-5378	339	5
			410	31
			412	24
19207	12338085	5325-01-205-3203	410	36
			412	12
19207	12338086-2	5995-01-269-9525	338	14
19207	12338086-3	5995-01-201-7495	410	1
19207	12338086-4	5995-01-251-9316	414	1
			416	2
19207	12338088	5995-01-201-4128	410	3
			412	3
19207	12338089-2	6150-01-269-1848	338	6
			339	7
19207	12338089-3	5995-01-201-4129	410	2
			412	2
19207	12338089-4		416	1
		5995-01-251-6785	428	2
19207	12338095	5310-01-208-7576	410	15
			414	10
			416	13
			425	11
			426	11
			427	12
			428	13
19207	12338098	5325-01-208-5424	410	10
			414	8
			416	8
19207	12338099-1		416	9
		6150-01-207-8120	426	16
			427	16
			428	9
19207	12338100-1	6150-01-269-1839	339	21
19207	12338100-2	6150-01-269-1849	338	1
34623	12338103	2540-01-250-7591	430	KITS
19207	12338105	2540-01-185-3216	365	
			402	
			402	KITA
19207	12338119	2510-01-246-8287	209	
19207	12338124	5310-01-413-2049	166	9

CROSS-REFERENCE INDEXES

PART NUMBER INDEX

CAGEC	PART NUMBER	STOCK NUMBER	FIG.	ITEM
19207	12338146	2590-01-185-6711	182	12
			183	20
19207	12338147	2510-01-175-7221	179	11
19207	12338148	2510-01-187-7033	183	25
19207	12338150-1	5340-01-254-6543	140	3
19207	12338150-2	2530-01-257-3864	140	6
19207	12338151-1	5342-01-277-9101	147	6
34623	12338151-7	2590-01-394-8134	147	3
19207	12338152	2510-01-203-9883	184	15
34623	12338155-1	2510-01-185-6647	182	19
34623	12338155-2	2510-01-185-6648	182	19
19207	12338159	5340-01-214-2089	181	1
19207	12338163	5340-01-186-7173	2	13
19207	12338164	5340-01-205-5377	188	20
19207	12338165	2530-01-210-3567	182	9
19207	12338167-1	2590-01-184-4475	184	3
19207	12338167-2	5340-01-361-6658	184	3
19207	12338170	5340-01-190-2248	141	18
			181	13
19207	12338171	5365-01-210-1628	184	8
19207	12338172	5340-01-209-7767	149	10
			183	26
			184	12
19207	12338173	5340-01-210-7966	181	12
34623	12338174	2510-01-210-6942	184	16
19207	12338178	5340-01-185-8620	179	14
			180	23
19207	12338180	5340-01-212-7711	182	10
19207	12338181	5340-01-186-7664	183	6
19207	12338183	2510-01-185-6114	2	12
19207	12338185	2590-01-186-0863	179	10
			180	16
19207	12338186-20	5310-01-292-5354	42	12
19207	12338186-52	5365-01-216-0364	277	30
			278	7
19207	12338186-62	5310-01-337-7034	42	12
19207	12338186-69	5365-01-466-0850	463	15
19207	12338187-1	5340-01-249-1576	179	5
19207	12338189	2540-01-186-6039	191	4
19207	12338190	2540-01-203-5664	184	18
19207	12338191-1	2540-01-187-7034	181	15
19207	12338191-2	2540-01-188-3239	181	15
19207	12338193	9520-01-175-7222	184	5
19207	12338194	2540-01-196-4723	188	21
19207	12338195	5365-01-219-3528	191	3
19207	12338197	5340-01-204-2584	183	11
19207	12338199	2540-01-186-0501	185	5
			187	5
19207	12338205	2510-01-185-6113	2	10
19207	12338215	5340-01-175-7208	140	9
19207	12338217	2510-01-175-7217	183	12

CROSS-REFERENCE INDEXES

PART NUMBER INDEX

CAGEC	PART NUMBER	STOCK NUMBER	FIG.	ITEM
19207	12338218	2540-01-196-4920	188	7
19207	12338221	2990-01-187-7030	23	10
19207	12338222	2510-01-175-7218	183	22
19207	12338223	2510-01-175-7219	182	17
19207	12338224	2510-01-210-6941	183	15
19207	12338225-1	5305-01-264-3602	183	1
			185	11
			187	15
			188	11
19207	12338226-2	5365-01-209-7832	181	5
			184	9
19207	12338230	2510-01-175-7216	182	11
19207	12338233-1		179	1
19207	12338233-2		179	1
19207	12338233-3		179	1
19207	12338233-4		179	1
19207	12338233-5		179	1
19207	12338233-6		179	1
19207	12338234		179	1
19207	12338234-1		179	1
19207	12338240	2530-01-189-1745	184	10
19207	12338245	2590-01-215-4325	181	6
19207	12338246	2510-01-249-1599	179	2
19207	12338247	2510-01-249-1600	179	15
19207	12338270	3120-01-186-5527	144	7
			144	21
			152	7
			152	21
19207	12338290	2530-01-187-7161	156	18
19207	12338291	2530-01-188-8446	153	8
19207	12338294	5306-01-197-3277	153	10
19207	12338295	2530-01-188-3520	153	7
34623	12338296	4710-01-185-9668	159	7
19207	12338298	4710-01-185-8328	161	13
19207	12338300	4710-01-185-9665	161	6
19207	12338301	5340-01-209-7795	159	13
19207	12338302	5340-01-209-7796	161	1
			162	1
19207	12338304	4710-01-189-2208	161	11
19207	12338305	4710-01-185-8329	161	8
19207	12338306	4710-01-185-9667	159	5
19207	12338307	4710-01-186-9620	161	5
			162	5
19207	12338308	4710-01-189-2209	161	3
19207	12338315	2510-01-187-7037	193	8
19207	12338316-1	5360-01-179-4107	192	1
34623	12338316-2	5360-01-179-4106	192	1
34623	12338316-3	5360-01-254-1492	192	1
19207	12338317	5325-01-191-0595	194	4
19207	12338319	5340-01-190-0810	194	5
19207	12338320	2530-01-210-1324	144	11

CROSS-REFERENCE INDEXES

PART NUMBER INDEX

CAGEC	PART NUMBER	STOCK NUMBER	FIG.	ITEM
19207	12338320	2530-01-210-1324	152	11
19207	12338322	5310-01-185-8689	194	9
34623	12338323	3040-01-186-3718	194	10
19207	12338324	5340-01-163-4773	150	34
			151	40
19207	12338328	3040-01-188-3684	144	17
			152	17
19207	12338329	2510-01-187-2239	194	3
19207	12338330-1		125	1
34623	12338330-2		125	8
19207	12338330-6		178	7
			436	1
19207	12338330-7		178	6
			436	2
19207	12338330-8		477	3
19207	12338330-9		477	2
34623	12338333	4710-01-189-0705	124	2
			125	2
19207	12338338	5325-01-187-1604	23	19
			24	18
19207	12338339	5330-01-200-0466	23	13
			24	21
			398	24
34623	12338340	5340-01-211-3137	23	20
			24	17
19207	12338342	5330-01-189-9738	23	3
			24	15
19207	12338343-1	5340-01-212-3553	23	6
			24	23
19207	12338343-2		24	3
19207	12338343-3	5340-01-383-2397	401	10
19207	12338346	2990-01-211-8587	23	16
			24	20
19207	12338350	2990-01-190-1089	23	15
			24	24
19207	12338351	2990-01-187-7168	23	5
19207	12338356	3120-01-186-7714	21	23
19207	12338362	5340-01-383-0462	21	3
19207	12338365	2540-01-185-9656	21	26
34623	12338369	2540-01-217-2669	21	20
19207	12338373	2940-01-188-3224	12	5
19207	12338379	5330-01-188-0911	12	38
19207	12338380	4720-01-185-8152	12	8
19207	12338382	5330-01-246-1822	12	14
			364	2
19207	12338390	3040-01-186-0967	165	10
19207	12338394	2540-01-184-4389	165	4
19207	12338415-3	2520-01-291-2975	140	4
			147	4
19207	12338425	2540-01-185-6710	185	9
19207	12338426	2540-01-189-1074	185	1

CROSS-REFERENCE INDEXES

PART NUMBER INDEX

CAGEC	PART NUMBER	STOCK NUMBER	FIG.	ITEM
19207	12338428	6680-01-191-8783	488	2
19200	12338428-2	6680-01-442-9413	45	19
			478	1
			488	2
19207	12338433	9905-01-207-6304	133	2
19207	12338434	2920-01-249-3492	99	20
19207	12338435	5930-01-212-3373	67	6
19207	12338439	2540-01-184-5502	99	4
19207	12338440-1	2520-01-184-5501	97	1
19207	12338440-2	2520-01-204-7699	97	1
19207	12338441	5342-01-188-3233	99	27
19207	12338442-1	3040-01-185-4388	99	21
19207	12338443	2520-01-189-1064	99	16
19207	12338448	2520-01-189-6726	133	10
34623	12338449	3040-01-188-3234	99	28
19207	12338451	3040-01-189-2134	99	24
19207	12338452	3040-01-198-5699	99	14
19207	12338454	2520-01-184-7036	99	22
19207	12338456	3040-01-249-1435	99	9
19207	12338457	5340-01-188-5072	99	5
19207	12338458-1	2520-01-188-8269	99	19
19207	12338459	3040-01-189-2172	133	14
19207	12338460	5306-01-201-7969	133	6
19207	12338462	5330-01-211-5856	47	5
19207	12338463	6680-01-195-2146	488	12
19207	12338465	6210-01-208-4790	47	1
19207	12338466	2540-01-185-6117	46	8
19207	12338467	2510-01-248-8875	47	6
19207	12338468	5905-01-183-9636	333	1
19207	12338470	9905-01-203-9992	354	10
19207	12338475	9905-01-203-9996	354	17
34623	12338477	2510-01-187-2238	46	1
19207	12338481	5340-01-266-9173	313	3
			457	21
19207	12338482	2540-01-185-3197	187	1
19207	12338489	2540-01-209-6838	315	1
19207	12338489-1	2540-01-354-4291	315	1
34623	12338495	2590-01-214-1566	315	7
19207	12338503-1	2540-01-318-9229	230	8
19207	12338521-1	5365-01-413-0275	266	22
19207	12338521-14	5365-01-255-0965	379	36
19207	12338521-5	5365-01-218-9914	285	8
			285	11
19207	12338528	2540-01-184-6602	230	3
19207	12338536	3040-01-192-1632	230	15
19207	12338539	3040-01-251-9383	230	10
19207	12338540	5340-01-185-8723	230	17
19207	12338548-2	4710-01-359-2956	15	6
			16	6
			366	18
19207	12338549	4710-01-186-9617	15	9

CROSS-REFERENCE INDEXES

PART NUMBER INDEX

CAGEC	PART NUMBER	STOCK NUMBER	FIG.	ITEM
19207	12338549	4710-01-186-9617	15	9
			16	8
19207	12338551-2	4720-01-212-8269	17	15
19207	12338553	4720-01-316-2538	BULK	14
9C234	12338553-1		366	22
		4720-01-316-2538	368	39
			386	8
19207	12338553-2		388	1
19207	12338557-1	5330-01-186-7757	15	29
			16	40
19207	12338557-2	5330-01-187-5148	15	26
			16	34
19207	12338558-2	5342-01-254-1498	366	1
19207	12338559	5340-01-204-3903	334	3
			336	27
			384	12
19207	12338560-1		13	14
			14	21
19207	12338560-3		14	12
19207	12338560-4		14	22
19207	12338561-2		14	26
19207	12338563	5340-01-186-8768	19	17
19207	12338564	4710-01-203-0608	366	23
19207	12338567	2910-01-184-2159	15	10
19207	12338568	5340-01-186-9606	15	31
			16	18
19207	12338570	5340-01-191-3526	15	32
19207	12338571	5340-01-191-0748	15	24
			16	31
19207	12338573	5340-01-191-0746	15	25
19207	12338574	5340-01-190-5100	15	27
			16	36
19207	12338575	5340-01-193-0251	15	28
			16	39
19207	12338578	2910-01-210-6856	13	20
34623	12338579	2910-01-189-4770	15	1
34623	12338580	2590-01-188-3267	17	2
19207	12338585	5330-01-194-0473	15	11
			16	10
19207	12338591	4720-01-189-0853	178	17
19207	12338591-1	4720-01-394-3747	178	17
34623	12338593	4710-01-209-4628	178	10
19207	12338596	5930-01-183-6637	66	9
19207	12338599	5930-01-237-7322	66	1
19207	12338603	5945-01-193-7175	51	5
19207	12338605	5340-01-286-6191	62	11
19207	12338608	5340-01-183-7233	60	3
			61	3
19207	12338609	5340-01-189-7558	68	2
19207	12338611	6220-01-193-1970	62	14
19207	12338622	2530-01-185-9651	170	6

CROSS-REFERENCE INDEXES

PART NUMBER INDEX

CAGEC	PART NUMBER	STOCK NUMBER	FIG.	ITEM
19207	12338629	5340-01-220-3084	205	10
19207	12338630	5340-01-185-0386	205	3
			206	8
19207	12338633	5340-01-251-0754	84	20
19207	12338634-1	5340-01-186-5520	205	41
19207	12338635	5365-01-210-1584	206	26
19207	12338637	5365-01-246-8281	205	18
34623	12338639-1	2510-01-185-7946	206	17
19207	12338640-2	9515-01-189-9728	205	37
19207	12338650	5342-01-203-2822	198	23
			280	48
			281	48
			321	27
			377	10
19207	12338667	5340-01-253-3757	197	23
19207	12338670	2510-01-411-2736	199	26
19207	12338676	5340-01-219-7541	64	3
19207	12338696-1	5340-01-314-4951	83	26
19207	12338709	6220-01-200-0897	197	17
			199	51
19207	12338716	2510-01-186-3107	199	34
19207	12338719	2510-01-262-6009	200	6
19207	12338723	3020-01-174-5984	142	29
			150	29
19207	12338725	5340-01-203-2821	331	36
19207	12338726	5340-01-209-7794	51	7
19207	12338734	2510-01-186-3106	197	28
19207	12338736	2510-01-262-6008	200	5
19207	12338738	2530-01-248-4873	184	18
19207	12338740	2510-01-262-6007	198	12
19207	12338765	6160-01-470-4172	198	3
19207	12338770	2815-01-168-7892	1	2
19207	12338770-4	2815-01-319-1433	1	2
19207	12338772	2920-01-175-7214	66	2
19207	12338773	3020-01-210-1391	174	11
19207	12338774	2590-01-207-3696	173	2
19207	12338775	5342-01-203-5661	174	3
19207	12338777	5340-01-212-4714	5	14
19207	12338779	5340-01-210-2747	5	15
19207	12338780	4330-01-168-7872	6	5
19207	12338781	3020-01-188-3885	34	20
19207	12338782	3020-01-313-0682	34	20
34623	12338786-1	2590-01-444-4365	37	16
			408	31
			475	19
19207	12338787	2815-01-168-7918	8	11
19207	12338788	2815-01-168-7917	8	10
19207	12338792	2920-01-168-7914	35	5
19207	12338807-4		226	6
			261	7
19207	12338807-6	5330-01-298-4713	211	28

CROSS-REFERENCE INDEXES

PART NUMBER INDEX

CAGEC	PART NUMBER	STOCK NUMBER	FIG.	ITEM
19207	12338807-6	5330-01-298-4713	212	24
19207	12338810	2540-01-246-8289	226	1
19207	12338813	5315-01-205-2988	225	36
			226	19
19207	12338814	5340-01-207-0379	199	24
19207	12338818	2590-01-246-8288	226	3
19207	12338819	2590-01-209-6043	226	26
19207	12338822-1	5342-01-186-7382	225	35
			226	23
19207	12338822-2	5342-01-185-0116	225	56
			226	37
19207	12338824	5340-01-185-0404	225	43
19207	12338828-1		328	1
19207	12338828-2		328	1
19207	12338829	5340-01-188-1018	225	21
			226	5
19207	12338830	2510-01-250-7597	227	1
19207	12338831	2540-01-214-1568	327	6
19207	12338833	5340-01-247-7912	226	10
19207	12338834-1	5340-01-185-6998	225	27
19207	12338834-2	5340-01-186-7594	225	11
19207	12338835	5340-01-185-0401	225	45
			226	32
19207	12338836-1	5340-01-186-7593	225	25
19207	12338836-2	5340-01-185-6997	225	10
19207	12338838-2	2590-01-263-3254	368	33
19207	12338839-1	5340-01-314-5957	210	15
			213	23
			231	3
			234	15
			254	5
			254	11
			254	17
			287	5
			292	2
			318	4
19207	12338839-3	5340-01-434-1809	260	21
19207	12338839-4	5340-01-197-8673	252	19
			253	36
			266	12
			317	10
			321	23
			323	15
			326	6
			377	6
19207	12338839-6	5340-01-197-8674	228	13
34623	12338839-7	5340-01-214-1778	247	25
19207	12338839-8	2510-01-199-5748	321	17
19207	12338841-1	2510-01-198-7413	225	34
			226	24
19207	12338842	5342-01-187-7029	12	36

CROSS-REFERENCE INDEXES

PART NUMBER INDEX

CAGEC	PART NUMBER	STOCK NUMBER	FIG.	ITEM
19207	12338843	2590-01-188-3225	225	51
19207	12338845	5340-01-185-7024	225	18
19207	12338847		328	5
19207	12338848		328	3
19207	12338849	2540-01-192-4500	199	30
19207	12338851-1	2540-01-216-6320	226	35
19207	12338851-2	2590-01-209-6042	226	35
19207	12338852	2590-01-189-1067	225	53
			226	35
19207	12338853	5340-01-332-7515	208	8
19207	12338860	5330-01-209-5997	225	54
19207	12338862	2590-01-209-6041	226	34
19207	12338863	2540-01-196-4726	12	33
19207	12338867	5340-01-358-9301	153	12
19207	12338879	5365-01-212-2325	202	31
19207	12338880	2510-01-209-0502	202	21
19207	12338884	5340-01-211-7436	203	13
19207	12338885	5340-01-191-3222	203	17
19207	12338886	5365-01-212-4736	202	19
19207	12338889	2540-01-212-5814	202	20
19207	12338891	2540-01-209-4590	202	24
19207	12338892	5365-01-210-1630	203	27
19207	12338893	5315-01-186-5633	202	37
19207	12338894	5315-01-213-5545	202	23
19207	12338895	3120-01-186-7715	205	27
19207	12338899	5340-01-185-8619	203	8
19207	12338900	5340-01-186-1388	202	32
19207	12338902	2590-01-261-5484	202	13
19207	12338903	5365-01-210-1629	203	7
19207	12338904	2590-01-261-2636	202	6
19207	12338905	2510-01-185-6715	202	29
19207	12338906	5340-01-209-7834	203	28
19207	12338907	2590-01-261-2637	202	12
19207	12338909	2540-01-185-9530	202	17
19207	12338911	5330-01-192-8916	203	16
19207	12338915	2510-01-185-6118	205	22
19207	12338920-1	5365-01-185-3108	204	4
19207	12338920-2	5365-01-189-9743	204	4
19207	12338921	2510-01-190-8458	204	3
34623	12338925-1	2510-01-185-7950	204	11
34623	12338925-2	2510-01-185-7945	204	11
19207	12338926	2510-01-189-9730	204	3
19207	12338936	2510-01-191-0971	204	8
19207	12338937	2510-01-186-3311	204	8
19207	12338940	2510-01-173-9347	202	1
19207	12338940-1	2510-01-473-2309	202	1
19207	12338945-1	2540-01-247-7915	208	38
19207	12338945-2	2540-01-247-7914	208	38
19207	12338950	2540-01-210-2787	208	33
34623	12338952-1	5342-01-249-3502	208	32
34623	12338952-2	5342-01-249-5389	208	32

CROSS-REFERENCE INDEXES

PART NUMBER INDEX

CAGEC	PART NUMBER	STOCK NUMBER	FIG.	ITEM
19207	12338957	4720-01-212-3531	177	9
19207	12338972	5340-01-214-4675	283	9
			438	9
19207	12338974-2	5340-01-260-5792	266	3
19207	12338976	5342-01-214-7809	284	15
			439	8
19207	12338978-2	2540-01-209-6875	284	16
			439	9
19207	12338981-1	2510-01-173-9316	266	10
19207	12338996	2590-01-186-3614	99	1
19207	12338997	5331-01-216-7393	488	4
19207	12338998	5331-01-216-7392	488	3
34623	12339002	5331-01-195-8889	488	19
19207	12339006	5340-01-197-5477	321	20
			325	23
19207	12339008	6220-01-257-3878	83	32
19207	12339009	5340-01-255-9510	198	9
			321	14
			323	12
			325	16
19207	12339011	5340-01-276-3615	237	1
19207	12339013	5306-01-190-2193	71	4
19207	12339014-2	2590-01-261-6851	369	12
19207	12339015-1	2590-01-251-3070	227	17
19207	12339015-2	2590-01-251-3071	227	6
19207	12339015-3	2590-01-251-3069	227	7
			227	17
34623	12339015-4	2590-01-251-3068	227	20
19207	12339017	5342-01-282-4853	71	8
19207	12339018	4710-01-254-7272	227	13
19207	12339019	2510-01-250-7593	227	26
19207	12339021	2510-01-369-3230	227	27
19207	12339026	2540-01-197-5448	197	2
19207	12339027	2540-01-197-5447	197	7
19207	12339028-1	9515-01-185-3111	267	8
34623	12339029-1	2540-01-192-9716	267	7
34623	12339029-2	2540-01-192-5948	267	10
19207	12339031-1	5340-01-470-5892	198	16
19207	12339031-2	5340-01-433-6262	198	16
19207	12339034	6160-01-184-0643	71	1
19207	12339035	6160-01-184-0728	71	5
19207	12339036	2590-01-203-9874	283	24
19207	12339036-1	2510-01-383-5444	283	24
19207	12339038	6160-01-263-9784	230	25
19207	12339039	2510-01-251-9995	227	21
19207	12339043-1	2590-01-203-9875	283	24
19207	12339043-3	2510-01-335-7343	283	24
19207	12339044	2510-01-251-8548	227	19
19207	12339047-1	2540-01-188-3675	235	9
19207	12339047-2	2540-01-185-4387	235	9
19207	12339048	2590-01-197-5446	199	49

CROSS-REFERENCE INDEXES

PART NUMBER INDEX

CAGEC	PART NUMBER	STOCK NUMBER	FIG.	ITEM
19207	12339052	5310-01-185-7214	12	11
			364	1
			436	7
19207	12339053	7690-01-204-0077	354	1
19207	12339055	9905-01-248-9550	356	2
19207	12339057	7690-01-265-1133	362	3
19207	12339059	7690-01-265-1134	362	4
19207	12339060	7690-01-265-1135	362	5
19207	12339063	7690-01-204-0076	354	18
19207	12339064	7690-01-197-5500	356	4
			357	1
			404	17
19207	12339065	7690-01-209-0864	356	1
19207	12339076	9905-01-185-3138	354	12
19207	12339077	9905-01-185-3132	354	12
19207	12339080	9905-01-224-5860	354	8
19207	12339082	9905-01-185-3134	354	12
19207	12339085	9905-01-185-3131	354	12
19207	12339087	9905-01-187-9468	355	2
19207	12339090	9905-01-186-3255	354	12
19207	12339091	9905-01-185-7973	354	12
19207	12339095	9905-01-185-7972	354	12
19207	12339096	9905-01-185-7975	354	12
19207	12339099	9905-01-185-3139	354	12
19207	12339100	9905-01-203-9994	354	4
			370	19
19207	12339101	9905-01-203-9995	354	14
19207	12339104	9905-01-186-3259	354	12
19207	12339105	9905-01-185-7977	354	20
19207	12339106	9905-01-193-4065	354	5
19207	12339107	9905-01-185-3143	355	1
19207	12339108	9905-01-248-7656	370	13
19207	12339109	9905-01-205-8635	354	15
			399	1
19207	12339110	9905-01-186-3253	354	12
19207	12339111	9905-01-248-7657	354	7
19207	12339112-2	3120-00-485-1017	166	8
19207	12339114	5315-01-185-8781	165	1
			166	1
19207	12339132	2510-01-185-6112	2	4
19207	12339133	2510-01-185-6115	2	1
34623	12339134	2520-01-175-7220	103	1
19207	12339137	5342-01-211-2897	7	4
19207	12339142	5340-01-182-1074	22	2
19207	12339146	2520-01-161-2136	104	1
19207	12339147	4710-01-188-3238	103	9
19207	12339147-2	4710-01-179-4346	400	5
19207	12339154-1	5340-01-251-0724	28	3
19207	12339155-1	4720-01-186-6018	27	5
19207	12339155-3		487B	32
19207	12339159	4720-01-188-1370	29	12

CROSS-REFERENCE INDEXES

PART NUMBER INDEX

CAGEC	PART NUMBER	STOCK NUMBER	FIG.	ITEM
19207	12339160	4720-01-188-3909	29	2
19207	12339162	4720-01-187-3386	29	7
19207	12339165-1	2930-01-210-6940	26	3
19207	12339165-2	2930-01-218-8103	26	3
19207	12339166-1	2510-01-210-6939	28	1
19207	12339166-2	2990-01-210-4276	28	1
19207	12339167	6680-01-184-9214	103	8
19207	12339168	6680-01-179-4350	3	4
19207	12339170	4710-01-196-1642	3	2
19207	12339174	2990-01-210-0427	25	4
19207	12339176	3040-01-188-8292	100	8
19207	12339181	2990-01-210-6982	25	3
19207	12339183	5360-01-186-4845	166	3
19207	12339186	2540-01-257-3877	188	3
19207	12339187	5340-01-207-0717	321	33
			325	28
			373	10
19207	12339188		199	13
19207	12339194	2590-01-247-7910	199	7
19207	12339196-1	2540-01-335-4482	199	3
34623	12339198	4330-01-189-1007	19	1
19207	12339201-1	2510-01-307-0152	332	44
19207	12339203	6210-01-211-7024	47	13
19207	12339203-1	6220-01-429-4596	47	13
34623	12339206	5310-01-439-1154	193	3
19207	12339207	5307-01-188-1229	194	11
19207	12339208	2910-01-210-5872	18	1
19207	12339222	2510-01-192-5947	199	32
19207	12339223	4010-01-194-8546	266	8
			284	5
19207	12339224-1	4010-01-218-4639	284	7
19207	12339224-2	4010-01-218-4640	284	9
19207	12339225-1	4030-01-255-3634	284	11
19207	12339225-2	4030-01-269-1263	284	11
19207	12339227-1	2510-00-933-2893	266	7
19207	12339227-2	2510-00-933-2895	266	7
19207	12339228-7	5330-01-209-7817	331	11
19207	12339228-9	5330-01-193-2338	266	9
34623	12339229-1	4010-01-217-7086	284	3
			439	3
34623	12339229-2	4010-01-215-7466	284	3
			439	3
19207	12339232-1	9515-01-185-3118	267	12
19207	12339232-2	9515-01-189-9721	267	12
34623	12339235	4730-01-184-6971	160	6
			162	17
19207	12339239-1	5305-01-195-5818	8	14
19207	12339240	5305-01-189-3769	34	19
19207	12339244-3	5340-01-209-7802	196	9
			196	14
19207	12339247-1	5342-01-186-7236	196	5

CROSS-REFERENCE INDEXES

PART NUMBER INDEX

CAGEC	PART NUMBER	STOCK NUMBER	FIG.	ITEM
19207	12339247-1	5342-01-186-7236	196	15
19207	12339247-3	5342-01-406-6962	196	10
			196	15
19207	12339248-2	5310-01-252-7285	196	6
19207	12339248-3	5310-01-476-9321	196	6
19207	12339249-1	5365-01-264-4023	196	13
19207	12339251	4720-01-189-2218	333	38
19207	12339252	2590-01-186-8704	331	33
34623	12339255	5330-01-185-8709	331	17
19207	12339261	5340-01-189-7554	331	37
			332	26
19207	12339263	4710-01-210-3504	333	5
19207	12339265-1		331	3
19207	12339265-10	4720-01-394-6170	368	44
			370	8
19207	12339265-12		337	3
19207	12339265-16	4720-01-451-0894	370	7
19207	12339265-2		331	6
34623	12339265-3	4720-01-279-5149	331	31
19207	12339265-6	4720-01-394-6166	370	2
19207	12339265-7	4720-01-325-6985	370	4
19207	12339265-8		331	21
19207	12339265-9		331	24
19207	12339267	5330-01-209-7842	331	16
19207	12339273	2510-01-210-2748	331	15
19207	12339281	2540-01-212-5815	331	27
19207	12339283	2540-01-210-1325	331	14
19207	12339289	2910-01-184-5499	331	1
34623	12339289-2	2540-01-257-3742	370	1
19207	12339291	2510-01-184-5497	331	12
19207	12339292	2910-01-184-5498	331	5
34623	12339292-1	2910-01-184-5498	332	6
19207	12339293-1		333	4
34623	12339296	5325-01-194-0562	17	3
19207	12339308	5310-01-188-1093	169	4
19207	12339310	5315-01-201-3592	169	5
19207	12339313	5310-01-188-6861	51	13
			165	11
19207	12339316		44	18
19207	12339316-1		44	18
19207	12339317		44	23
		6150-01-449-5445	408	32
			480	25
19207	12339317-1		480	29
			BULK	90
19207	12339323	2590-01-217-2662	64	24
			81	14
19207	12339324	6150-01-473-2435	81	14
19207	12339327	5999-01-183-9530	327	20
19207	12339331		79	26
19207	12339332		83	27

CROSS-REFERENCE INDEXES

PART NUMBER INDEX

CAGEC	PART NUMBER	STOCK NUMBER	FIG.	ITEM
19207	12339332	5935-01-421-4801	88	47
19207	12339333	5340-01-209-7387	75	34
			77	15
19207	12339334	5975-01-207-1706	75	14
19207	12339335	5340-01-212-4716	75	30
			77	10
19207	12339336	5340-01-206-5540	75	41
19207	12339337	5365-01-206-7486	72	7
19207	12339338	5935-01-212-9631	84	7
34623	12339339		83	14
19207	12339342	5995-01-210-3594	81	2
19207	12339343	5340-01-198-0480	75	49
			77	27
19207	12339345	5995-01-188-3269	81	1
19207	12339345-1		84	14
19207	12339346	5995-01-197-5554	82	1
19207	12339347-1	6150-01-185-8240	327	18
19207	12339347-2	6150-01-210-3596	327	18
19207	12339349	5995-01-184-5544	80	1
19207	12339350	5995-01-184-5545	75	1
19207	12339353-1	4820-01-359-9489	159	2
			160	11
19207	12339355-1	5320-01-271-6357	365	14
			369	7
19207	12339355-2	5320-01-264-5978	219	6
			245	35
			295	9
			297	2
			297	2
			300	5
			307	7
			308	13
			342	8
34623	12339359-12	3030-01-282-6968	35	1
			472	19
19207	12339359-14	3030-01-256-3616	408	1
		3030-01-452-6591	475	22
19207	12339359-18	3030-01-321-4482	37	19
			408	2
			475	27
19207	12339359-26	3030-01-333-2286	37	19
19207	12339359-28	3030-01-466-5387	476	26
19207	12339369	5360-01-198-3525	280	43
			281	43
19207	12339374-1	2510-01-188-7381	280	40
			281	40
19207	12339374-2	2510-01-189-9748	280	40
			281	40
19207	12339375-1	2510-01-209-3450	280	40
			281	40
19207	12339375-2	2510-01-196-5506	280	40

CROSS-REFERENCE INDEXES

PART NUMBER INDEX

CAGEC	PART NUMBER	STOCK NUMBER	FIG.	ITEM
19207	12339375-2	2510-01-196-5506	281	40
19207	12339376-1		231	16
			BULK	65
19207	12339377-1	2540-01-201-2356	281	9
19207	12339377-2	2540-01-201-2357	281	9
19207	12339378-1	2510-01-199-1498	280	9
19207	12339378-2	5340-01-197-4901	280	9
19207	12339379	5365-01-253-8980	280	51
			281	51
19207	12339380	5355-01-252-6504	280	38
			281	38
19207	12339386	5340-01-421-1782	281	52
19207	12339392	3020-01-232-9629	37	20
			408	21
			475	28
19207	12339395	3020-01-198-0633	35	22
19207	12339397-1	5310-00-755-7283	199	5
19207	12339397-3	5310-01-231-7455	398	6
19207	12339397-4	5340-01-213-4662	80	15
			203	15
19207	12339397-5	5310-01-312-4777	203	22
19207	12339397-6	5310-01-388-6205	398	7
19207	12339401	5315-01-185-6967	226	20
19207	12339402	5325-01-209-7843	333	25
			372	4
19207	12339404-2	5340-01-195-9107	280	18
			281	18
19207	12339406-2	5307-01-291-9018	30	5
			490	4
19207	12339406-3	5307-01-315-3597	8	12
			36	18
			38	18
			42	2
			408	29
			475	15
19207	12339406-4	5307-01-465-5796	30	11
			472	17
19207	12339410	4730-01-187-6929	6	4
34623	12339411-2	4720-01-187-6911	5	10
19207	12339412	3020-01-204-8132	404	15
			405	1
			472	22
34623	12339413	5305-01-285-4923	44	10
19207	12339416-1	2510-01-196-5316	280	15
			281	15
19207	12339416-2	5342-01-195-8039	280	15
			281	15
19207	12339420-1	2590-01-253-3905	235	5
19207	12339426	5310-01-448-3219	332	32
19207	12339428	5305-01-211-1470	208	34
19207	12339431	2510-01-248-1340	208	19

CROSS-REFERENCE INDEXES

PART NUMBER INDEX

CAGEC	PART NUMBER	STOCK NUMBER	FIG.	ITEM
19207	12339433	5310-01-218-3190	202	9
			252	29
19207	12339438	5340-01-266-6398	227	15
34623	12339448-1	5340-01-199-3498	280	6
			281	6
34623	12339448-4	5340-01-201-9076	280	6
			281	6
19207	12339450	2510-01-199-1499	280	32
			281	32
34623	12339451-1	3040-01-195-4173	281	33
34623	12339451-2	3040-01-196-1493	281	33
19207	12339452-1	3040-01-200-1015	280	33
34623	12339454-1	2540-01-199-5812	280	29
19207	12339462	5330-01-196-7969	281	26
19207	12339463-1	5330-01-198-8789	280	26
19207	12339463-2	5330-01-196-7968	280	26
19207	12339469-1	2510-01-254-1482	280	1
19207	12339469-2	2510-01-253-3907	280	1
19207	12339473-1	2510-01-254-1501	281	1
19207	12339473-2	2510-01-257-3904	281	1
19207	12339477-1	2510-01-257-3876	281	1
34623	12339477-2	2510-01-254-1483	281	1
19207	12339480-1	2510-01-257-3903	280	1
19207	12339480-2	2510-01-254-1500	280	1
19207	12339491-1	5342-01-250-1098	10	14
19207	12339492	5360-01-210-2852	22	3
19207	12339494	5930-01-199-8853	66	3
19207	12339495	2530-01-168-7876	174	5
19207	12339501	5310-01-198-7585	167	7
			167	20
19207	12339503	5970-01-180-9776	75	8
19207	12339506	2510-01-289-8258	226	36
19207	12339507	2510-01-289-8260	226	36
19207	12339508	2510-01-289-8259	226	36
19207	12339509	2510-01-289-2233	226	36
19207	12339512	2510-01-233-1141	225	12
19207	12339513	2510-01-233-7767	226	4
19207	12339514	9340-01-185-3757	225	55
19207	12339518	5307-01-446-5930	103	14
19207	12339544	5315-01-289-6212	271	11
			271	24
19207	12339545	5340-01-214-4992	271	6
			271	23
			296	6
19207	12339546	2540-01-209-6049	271	3
			271	20
19207	12339547	5360-01-194-6070	271	4
			271	21
19207	12339548	5305-01-197-1594	271	2
			271	19
19207	12339559	5307-01-254-2504	278	11

CROSS-REFERENCE INDEXES

PART NUMBER INDEX

CAGEC	PART NUMBER	STOCK NUMBER	FIG.	ITEM
19207	12339561	2540-01-192-5949	277	28
			278	9
19207	12339562	2540-01-194-0197	277	26
19207	12339569	5340-01-448-4316	278	2
19207	12339579	5342-01-194-5806	269	30
34623	12339595	5330-01-195-9083	268	2
19207	12339599	5310-01-197-1100	270	36
19207	12339601	5340-01-460-5002	270	41
19207	12339602	3120-01-200-4105	268	34
19207	12339605	5340-01-197-2642	270	25
19207	12339610-1	2540-01-252-8460	270	33
34623	12339610-2	2540-01-252-3386	270	33
19207	12339612	2510-01-189-9741	268	16
34623	12339623-1	2510-01-187-3606	278	4
34623	12339623-3	2510-01-192-9723	278	4
19207	12339624-1	2510-01-205-2507	278	5
19207	12339624-2	2540-01-203-9872	278	6
19207	12339625	2510-01-249-1583	268	22
19207	12339626-1	2590-01-205-2506	278	13
19207	12339631-2	2540-01-236-6489	278	4
19207	12339634-3		271	7
19207	12339634-4		271	7
19207	12339635-3		271	26
19207	12339635-4		271	26
19207	12339639-3		271	7
			271	26
19207	12339639-4		271	7
19207	12339640-3		271	26
19207	12339641-1	2510-01-250-7786	268	3
19207	12339641-2	2510-01-248-9557	268	3
19207	12339642	2590-01-188-7394	270	6
19207	12339644-5	2510-01-345-4365	271	1
19207	12339644-6	2510-01-344-4169	271	18
19207	12339644-7	2510-01-332-0128	271	1
19207	12339644-8	2510-01-354-0417	271	18
19207	12339646-1	2540-01-192-4504	269	10
19207	12339646-2	2540-01-192-9721	269	10
19207	12339649-1	2510-01-249-1582	268	21
19207	12339649-2	2510-01-249-1581	268	21
19207	12339650	2510-01-249-1580	268	20
34623	12339651-1	2510-01-262-9520	268	3
34623	12339651-2	2510-01-185-3155	268	3
19207	12339655-10	2510-01-332-0129	271	1
19207	12339655-6	2510-01-366-6968	271	18
19207	12339655-7	2510-01-348-6670	271	1
19207	12339655-8	2510-01-366-6969	271	18
19207	12339661-1	5340-01-332-7602	225	6
			226	39
19207	12339662	5307-01-190-7650	103	12
19207	12339663	5315-01-190-5908	266	20
19207	12339664	5340-01-408-8508	261	9

CROSS-REFERENCE INDEXES

PART NUMBER INDEX

CAGEC	PART NUMBER	STOCK NUMBER	FIG.	ITEM
19207	12339679-1	2590-01-189-9736	274	24
			276	21
19207	12339679-2	2590-01-188-5080	245	38
19207	12339680	2590-01-188-5079	245	14
19207	12339689		274	15
19207	12339690	2590-01-189-9747	274	14
19207	12339694	5310-01-215-5356	332	25
19207	12339697	2510-01-189-3456	209	7
19207	12339698-3	2510-01-335-7799	197	25
19207	12339698-4	2510-01-361-8213	199	39
19207	12339701-1	2510-01-335-4171	197	12
19207	12339707-1	2510-01-335-4170	199	55
9Z043	12339710	5975-01-208-9618	474	15
			480	18
			480	30
19207	12339716		75	6
19207	12339724	5310-01-194-6459	277	36
19207	12339726	5315-01-203-8543	280	41
			281	41
19207	12339727	5365-01-201-4749	281	28
19207	12339728-3	5310-01-198-3487	280	13
			281	13
19207	12339730	5310-01-254-4284	280	3
			281	3
19207	12339750	6140-01-188-5113	247	4
19207	12339751	5365-01-256-9568	245	29
19207	12339753	5340-01-196-7733	246	26
19207	12339754	5340-01-246-8290	246	34
19207	12339755-4	5340-01-258-4866	252	23
19207	12339758	5340-01-199-8258	247	19
19207	12339759	5340-01-252-0741	245	34
19207	12339760	5340-01-256-4659	243	3
19207	12339763	5340-01-256-4515	243	30
19207	12339764	7690-01-191-6467	359	7
19207	12339767	5365-01-196-2699	243	18
19207	12339778	2590-01-235-8661	243	5
			244	2
			244	14
19207	12339779	5340-01-256-4516	244	3
19207	12339784	2510-01-252-4756	243	21
19207	12339798	5340-01-199-3495	245	31
19207	12339802	2590-01-194-6979	249	37
19207	12339803	2590-01-194-6980	249	30
19207	12339805	5340-01-188-7382	249	29
19207	12339806	2540-01-246-8286	244	4
34623	12339807	2540-01-246-8285	244	1
19207	12339809	2590-01-199-7977	248	24
19207	12339811	2590-01-194-6981	249	5
19207	12339813	5340-01-188-7383	249	4
19207	12339814-2	5365-01-214-0006	246	30
19207	12339814-6	5365-01-256-4526	246	28

CROSS-REFERENCE INDEXES

PART NUMBER INDEX

CAGEC	PART NUMBER	STOCK NUMBER	FIG.	ITEM
19207	12339817-4	5340-01-265-8923	287	27
19207	12339817-9	5340-01-287-6352	262	15
19207	12339818	2590-01-246-8291	249	13
19207	12339819	2540-01-246-8284	243	4
19207	12339820	2590-01-249-1578	244	12
19207	12339821	2540-01-246-8283	242	1
19207	12339832	5340-01-238-9543	398	5
34623	12339833	4710-01-209-6746	398	14
19207	12339843	2510-01-198-0333	398	2
19207	12339844	4710-01-202-8245	400	1
19207	12339845	2540-01-192-4502	399	12
19207	12339846	6680-01-185-3202	400	3
			479A	3
19207	12339848	5340-01-185-7959	398	18
19207	12339849	2990-01-210-2176	398	19
19207	12339856	2590-01-213-1628	283	21
			438	20
34623	12339857	2590-01-213-1629	283	15
			438	14
19207	12339862-2	5310-01-211-0698	283	2
			438	2
19207	12339875	2540-01-213-8057	283	1
			438	1
19207	12339884-1	4730-00-024-3971	368	38
19207	12339888	4730-01-186-5994	19	15
19207	12339889	4730-01-185-9453	19	22
			27	9
19207	12339890	5340-01-187-0892	13	2
			14	2
			141	21
			408	15
19207	12339900	9905-01-248-9544	355	4
19207	12339901	9905-01-248-9546	355	4
19207	12339902-1	2590-01-196-7281	BULK	46
19207	12339902-13	2590-01-471-0236	12	16
19207	12339904	5340-01-470-7135	198	4
19207	12339905	5340-01-470-7160	198	6
19207	12339907	2510-01-250-7596	227	2
34623	12339908	2510-01-209-1881	227	12
34623	12339909	2510-01-376-1092	368	31
19207	12339912		286	23
19207	12339913	5365-01-255-3610	285	15
19207	12339916	5340-01-197-5469	286	4
19207	12339921	2590-01-217-2665	286	24
19207	12339924	5310-01-228-3299	286	22
19207	12339925	2540-01-217-2666	286	21
34623	12339942	2540-01-389-0984	286	7
19207	12339944	2590-01-232-8210	286	42
19207	12339945	5340-01-367-2070	266	14
19207	12339947-1	2510-01-217-2663	286	33
19207	12339947-2	2510-01-217-2664	286	33

CROSS-REFERENCE INDEXES

PART NUMBER INDEX

CAGEC	PART NUMBER	STOCK NUMBER	FIG.	ITEM
19207	12339951	2540-01-383-6470	286	25
19207	12339952	2590-01-248-9536	286	40
19207	12339954-1	5340-01-217-2667	286	27
19207	12339954-2	5340-01-217-2576	286	27
19207	12339957	2590-01-217-5743	286	1
19207	12339958-1	2590-01-197-5474	286	39
19207	12339958-2	2590-01-197-5475	286	39
19207	12339959	2590-01-199-5425	285	1
19207	12339961-1	5340-01-196-8028	403	17
19207	12339973-1	4730-01-003-5105	457	2
34623	12339981-2		399	17
19207	12339981-5		401	1
19207	12339981-6		401	4
19207	12339981-8		141	7
19207	12339981-9		141	1
19207	12339987	9905-01-248-9545	355	4
19207	12339988-1	5340-01-246-8282	197	31
19207	12339988-2	5340-01-248-7646	199	43
19207	12339996	5340-01-197-2382	398	28
19207	12339997	2590-01-192-4425	399	11
19207	12339998-13	4931-01-202-8692	213	13
			214	7
			252	24
			254	23
			267	11
			277	20
			342	6
			401	18
			498	19
19207	12339998-14	5310-01-198-1723	225	20
			246	15
			251	35
			252	32
			253	27
			255	30
			266	11
			318	6
			333	27
			429	16
34623	12339999	5340-01-189-7739	266	19
19207	12340001-2	5306-01-199-1314	270	3
19207	12340019	5340-01-196-4720	188	4
19207	12340020	5340-01-214-3712	83	7
19207	12340024	4730-01-188-3296	104	16
19207	12340025	2540-01-184-5500	328	10
19207	12340027	9905-01-249-1612	354	19
34623	12340028-2L	2510-01-189-9717	207	1
34623	12340028-5	2510-01-193-1807	207	1
19207	12340029	4720-01-212-6403	333	26
19207	12340031	2540-01-196-5313	325	2
19207	12340039-1	2540-01-197-4900	280	22

CROSS-REFERENCE INDEXES

PART NUMBER INDEX

CAGEC	PART NUMBER	STOCK NUMBER	FIG.	ITEM
19207	12340041-4	5340-01-218-7739	268	33
19207	12340045	5365-01-271-2491	266	26
			439	4
19207	12340046	4720-01-360-2380	27	7
19207	12340048		44	12
34623	12340051	2540-01-188-3229	235	3
19207	12340053	5315-01-197-3122	245	5
19207	12340057	5340-01-197-5548	37	5
			408	7
19207	12340058	5310-01-253-8437	127	9
			230	13
			234	11
			235	12
			239	12
19207	12340061	2930-01-256-5350	27	3
19207	12340063		243	6
			244	5
			244	13
19207	12340078-3	5330-01-476-9295	489	4
19207	12340078-5		489	5
19207	12340087	5340-01-249-1587	275	25
19207	12340090-1	2510-01-257-1572	277	17
			277	45
19207	12340090-2	2510-01-266-8013	277	18
			277	44
19207	12340091	2510-01-254-1056	272	16
19207	12340095	5330-01-238-3217	275	24
19207	12340096	5340-01-211-6288	272	13
19207	12340097	5340-01-203-8674	274	29
19207	12340098	5365-01-253-8975	272	11
19207	12340099-1	5365-01-195-4949	277	5
19207	12340103		BULK	1
19207	12340103-3	2590-01-460-8320	233	7
			277	32
19207	12340103-4	2590-01-457-9922	277	32
			473	3
19207	12340104	2510-01-257-3747	274	2
			276	28
19207	123401103-2	5330-01-205-8607	273	21
19207	12340111	3040-01-198-7473	273	10
19207	12340115-1	5365-01-254-4394	277	13
19207	12340115-2	5365-01-457-3364	277	13
19207	12340116	2510-01-252-6240	277	3
19207	12340117	5330-01-270-1353	276	26
19207	12340123	2590-01-258-9491	272	7
19207	12340124	5340-01-253-8377	272	12
19207	12340126	2510-01-253-2839	272	10
19207	12340129	5340-01-198-2249	246	16
19207	12340130	5340-01-253-5479	246	19
			253	34
			254	25

CROSS-REFERENCE INDEXES

PART NUMBER INDEX

CAGEC	PART NUMBER	STOCK NUMBER	FIG.	ITEM
19207	12340130	5340-01-253-5479	255	27
19207	12340131	2540-01-202-8545	409	11
			411	15
			415	17
19207	12340132	5365-01-198-3463	248	17
19207	12340133	5340-01-256-4517	255	21
19207	12340134	2590-01-202-8546	409	6
			411	12
			415	11
19207	12340135	1010-01-247-7917	251	8
19207	12340142	2590-01-194-2048	250	22
19207	12340143	2590-01-264-6531	251	29
19207	12340147-2	2590-01-248-7623	251	34
19207	12340151	5340-01-209-7386	411	17
19207	12340152	1010-01-252-6300	251	9
19207	12340153	2540-01-202-8548	411	8
19207	12340154	5340-01-246-8293	251	37
19207	12340155	2510-01-197-8572	246	20
			253	24
			254	19
19207	12340156	1005-01-252-6299	251	3
19207	12340158-2	2590-01-247-7920	255	34
19207	12340158-3	2540-01-262-9516	253	33
			254	28
19207	12340160	2590-01-255-2958	251	48
19207	12340161	2590-01-255-2957	251	36
19207	12340162	1005-01-247-7916	251	6
19207	12340163	5340-01-247-7921	251	13
19207	12340164	5340-01-247-7918	252	25
19207	12340166	2590-01-246-8294	252	36
			253	3
			255	3
19207	12340167	5975-01-197-5505	409	3
			411	3
			430	48
19207	12340170	2540-01-246-8292	251	22
			254	3
19207	12340174	2590-01-188-7384	246	5
19207	12340175-1	2590-01-247-7923	255	8
34623	12340175-2	2590-01-262-9514	253	8
34623	12340175-3	2590-01-262-9513	253	28
19207	12340179	5340-01-247-7922	252	15
19207	12340180	2590-01-247-7924	255	22
19207	12340182-1	5340-01-208-7670	321	26
			325	24
			376	16
19207	12340182-2	5342-01-204-9610	321	26
			325	24
19207	12340183	5995-01-184-2228	79	1
19207	12340193-1	5340-01-205-9021	316	17
			320	13

CROSS-REFERENCE INDEXES

PART NUMBER INDEX

CAGEC	PART NUMBER	STOCK NUMBER	FIG.	ITEM
19207	12340193-1	5340-01-205-9021	320	25
			324	23
			324	35
			375	24
			378	24
19207	12340193-2	5340-01-205-9022	316	17
			320	13
			320	25
			324	23
			324	35
			375	24
			378	24
19207	12340196	5340-01-199-9679	323	10
			326	9
19207	12340199	2540-01-197-5526	326	1
19207	12340201	5340-01-254-7189	316	19
			320	16
			320	30
			324	20
			324	32
			378	26
19207	12340209	5315-01-197-1494	323	9
19207	12340212-3	5325-01-357-1080	316	18
			320	33
			324	39
19207	12340222-1	2590-01-196-1290	321	7
			325	11
			376	6
19207	12340222-2	2590-01-196-5314	321	7
			325	11
			376	6
19207	12340226	2540-01-197-5478	324	1
19207	12340226-2	2540-01-476-2172	324	1
19207	12340231-10	2510-01-450-5480	316	7
			320	19
			324	24
19207	12340231-11	2510-01-450-5479	316	7
			320	19
			324	24
19207	12340231-3	2510-01-330-6174	316	7
			320	19
19207	12340231-4	2510-01-330-6175	316	7
			320	19
34623	12340231-5	2510-01-407-6037	316	7
			320	19
34623	12340231-6	2510-01-407-6036	316	7
			320	19
19207	12340239	5340-01-204-3862	317	3
			321	4
			325	7
			373	2

CROSS-REFERENCE INDEXES

PART NUMBER INDEX

CAGEC	PART NUMBER	STOCK NUMBER	FIG.	ITEM
19207	12340239	5340-01-204-3862	376	3
19207	12340241	2540-01-197-5525	325	5
19207	12340245-1	2510-01-189-3460	320	5
19207	12340245-2	2510-01-189-3459	320	5
19207	12340245-3	2510-01-330-6176	320	5
19207	12340245-4	2510-01-330-6576	320	5
			320	5
34623	12340245-5	2510-01-412-6761	320	5
34623	12340245-6	2510-01-413-8872	320	5
19207	12340245-7	2510-01-450-5482	320	5
			324	10
19207	12340245-8	2510-01-450-5483	320	5
			324	10
19207	12340252	2530-01-196-4724	208	1
19207	12340258	5340-01-332-7599	331	19
			332	23
			370	5
19207	12340259	5305-01-254-2522	230	12
			238	1
19207	12340259-10	5306-01-450-5947	230	14
			235	15
19207	12340259-11	5306-01-437-8056	234	18
			239	13
19207	12340259-12	5306-01-449-0510	235	11
19207	12340259-13	5306-01-437-8058	239	14
19207	12340259-2	5305-01-264-3555	230	14
19207	12340259-4	5306-01-315-7088	234	7
19207	12340259-5	5306-01-315-7087	239	3
19207	12340259-6	5306-01-316-1456	234	12
19207	12340259-7	5306-01-316-2433	234	1
			239	10
19207	12340263	5310-01-269-0786	26	8
19207	12340264	5340-01-197-3461	26	9
19207	12340271	5340-01-210-4751	240	9
19207	12340275-1	5340-01-210-1606	240	17
19207	12340286	2590-01-188-3237	240	5
34623	12340288	2540-01-185-6119	240	8
34623	12340289	2540-01-223-3749	240	8
19207	12340293	2590-01-197-4899	272	37
19207	12340298	2590-01-192-4525	277	8
19207	12340301	2540-01-192-9718	277	21
19207	12340302	3110-01-185-3114	277	9
19207	12340310	3120-01-188-5082	275	15
			276	14
19207	12340310-1		275	16
			276	15
19207	12340311	2510-01-189-9828	274	1
			276	25
19207	12340312	2590-01-185-3112	277	11
19207	12340313	2590-01-204-7836	272	28
19207	12340314	5340-01-247-7919	252	30

CROSS-REFERENCE INDEXES

PART NUMBER INDEX

CAGEC	PART NUMBER	STOCK NUMBER	FIG.	ITEM
19207	12340318	9905-01-248-1113	355	4
19207	12340320	9905-01-248-1114	355	4
19207	12340321	9905-01-248-9543	355	4
19207	12340322	9905-01-248-1112	355	4
19207	12340323	9905-01-185-7970	355	4
19207	12340324	9905-01-248-9548	355	4
19207	12340325	9905-01-248-9549	355	4
19207	12340326	9905-01-248-9552	355	4
19207	12340327	9905-01-248-1115	355	4
34623	12340331	4730-01-394-8345	368	37
19207	12340334	2540-01-185-3113	277	24
19207	12340336		273	15
19207	12340337	4710-01-189-9727	273	23
19207	12340338	2540-01-192-5937	277	41
19207	12340340	2510-01-249-1585	272	1
19207	12340342-2	4710-01-192-9720	277	15
19207	12340342-3		277	43
19207	12340342-4		277	16
19207	12340342-5	4710-01-333-5995	277	42
19207	12340342-6	4710-01-335-7523	277	15
19207	12340346	2590-01-189-9734	273	6
19207	12340347	2510-01-249-1586	272	1
19207	12340349		275	6
19207	12340352-1	5306-01-323-5535	207	8
			280	50
19207	12340352-2	5306-01-323-5534	198	22
19207	12340360	2540-01-174-7696	206	14
19207	12340362	5935-01-238-0543	84	13
			86	21
19207	12340364	5340-01-197-5470	416	5
19207	12340366	5340-01-255-2729	429	23
19207	12340372	7690-01-248-7680	429	33
19207	12340373	7690-01-248-4908	430	43
19207	12340374	7690-01-248-7682	430	24
19207	12340375	7690-01-248-4909	430	45
19207	12340376	7690-01-250-1101	430	47
19207	12340377	7690-01-248-7679	429	28
19207	12340378	7690-01-248-7683	430	46
19207	12340379	7690-01-248-7681	429	39
19207	12340382	5340-01-249-1594	429	21
19207	12340387	5340-01-257-3778	430	25
19207	12340390	5340-01-255-9515	430	2
19207	12340401	2540-01-249-1595	429	30
19207	12340409	5340-01-248-7649	430	36
19207	12340411	2540-01-249-1598	430	30
19207	12340413	2540-01-249-1592	429	8
19207	12340414	2590-01-249-1596	430	1
19207	12340419	2540-01-249-1593	429	19
19207	12340420	2540-01-250-7592	430	31
19207	12340421	2540-01-249-1597	430	4
19207	12340422	2540-01-250-7589	429	1

CROSS-REFERENCE INDEXES

PART NUMBER INDEX

CAGEC	PART NUMBER	STOCK NUMBER	FIG.	ITEM
19207	12340423	7690-01-248-4907	430	28
19207	12340432	2540-01-293-6926	368	2
19207	12340434	2540-01-197-5450	368	4
19207	12340436	2540-01-199-2396	366	2
19207	12340442	9905-01-199-2371	367	2
19207	12340448	5340-01-204-3904	368	21
19207	12340448-1	5340-01-476-5616	228	12
19207	12340466	6210-01-203-2101	367	4
19207	12340470	2540-01-254-6511	370	9
19207	12340474	5340-01-395-1244	365	24
19207	12340477	4140-01-259-2175	368	6
19207	12340486	5365-01-211-5094	177	15
19207	12340487	1015-01-200-0869	250	17
			252	6
			252	6
19207	12340489	6150-01-260-8000	366	29
19207	12340492	4720-01-211-1998	364	4
			379	40
19207	12340493	4720-01-257-2655	364	9
			379	43
19207	12340498	4710-01-257-2649	364	5
			379	42
19207	12340507-4	5340-01-258-4529	251	38
			253	19
			254	6
19207	12340514	5305-01-188-5133	102	2
19207	12340515	5305-01-215-5174	3	1
			75	40
			77	21
			479	1
19207	12340523	5325-01-047-3201	323	11
19207	12340526	5325-01-437-4175	319	7
19207	12340531-3	2590-01-194-6990	333	35
19207	12340531-4	2590-01-212-4956	333	36
19207	12340533-3	5325-00-185-0961	207	11
19207	12340535-1	2540-01-192-9715	403	21
19207	12340535-2		403	21
19207	12340536-1	2540-01-193-2711	403	22
19207	12340542-1	2540-01-394-9682	402	6
19207	12340542-2	2540-01-394-9683	402	6
19207	12340542-3	2540-01-394-4788	402	6
19207	12340542-4	2540-01-394-4787	402	6
19207	12340542-5	2540-01-394-4792	402	6
19207	12340542-6	2540-01-394-9679	402	6
19207	12340544	2540-01-185-7951	403	2
19207	12340545-2		403	1
			403	6
19207	12340546-1	2540-01-192-9711	403	5
19207	12340549	2540-01-192-4501	403	15
19207	12340553	2540-01-185-8015	403	14
19207	12340560-1	2540-01-185-8016	402	1

CROSS-REFERENCE INDEXES

PART NUMBER INDEX

CAGEC	PART NUMBER	STOCK NUMBER	FIG.	ITEM
19207	12340560-3	2540-01-396-7759	402	1
19207	12340560-4	2540-01-399-0785	402	1
19207	12340560-5	2540-01-396-7756	402	1
34623	12340560-6	2540-01-396-7757	402	1
19207	12340562-1		403	16
19207	12340562-2		403	16
19207	12340565	3120-01-251-0735	133	13
19207	12340569	5340-01-247-7911	242	9
19207	12340570	6625-01-192-7498	69	28
19207	12340571-2	5340-01-460-5306	141	16
19207	12340581	2540-01-250-7590	415	9
34623	12340587-3	2990-01-394-9670	365	9
19207	12340591	2590-01-257-8787	369	13
19207	12340591-1	2540-01-452-5034	369	13
19207	12340593-1	2540-01-461-1134	369	14
			369	14
19207	12340594	5940-01-180-3655	481	1
19207	12340603-1	2590-01-198-2895	373	5
19207	12340603-2	2590-01-197-4898	2590	5
19207	12340604		375	8
			378	7
19207	12340605		378	15
19207	12340608	2510-01-325-8741	375	15
19207	12340631	5325-01-255-5063	416	24
19207	12340635	5340-01-255-1109	413	9
			421	10
			422	10
19207	12340636	5340-01-255-9514	415	8
19207	12340637	5985-01-253-3514	414	4
			425	13
19207	12340638	2540-01-202-8547	208	16
19207	12340639	5340-01-249-1590	415	7
19207	12340641	2540-01-249-1589	413	7
31272	12340648	5340-01-434-2864	272	31
			272	31
19207	12340652	7690-01-256-4908	354	21
19207	12340653	9905-01-248-1111	355	4
19207	12340654	5340-01-476-6612	282	11
19207	12340655	5995-01-195-1918	282	1
19207	12340655-1	5995-01-339-0190	282	1
			435	4
34623	12340658	2510-01-254-1484	208	18
19207	12340661	2530-01-197-5502	490	14
19207	12340663-1	5340-01-213-4667	77	25
19207	12340664	5342-01-205-5381	77	26
19207	12340665	5340-01-213-4665	83	12
			88	34
19207	12340666	5340-01-443-6908	88	33
19207	12340676	2540-01-189-3706	320	1
19207	12340676-11	2540-01-330-6177	320	1
19207	12340676-21	2540-01-412-2661	320	1

CROSS-REFERENCE INDEXES

PART NUMBER INDEX

CAGEC	PART NUMBER	STOCK NUMBER	FIG.	ITEM
19207	12340676-31	2540-01-450-4019	320	1
19207	12340679	2540-01-196-1291	321	13
			376	10
19207	12340682	2540-01-199-6759	317	1
			321	2
			376	1
19207	12340688-1	5340-01-196-3297	267	19
19207	12340689-1	9515-01-185-3110	267	19
19207	12340689-2	9515-01-189-9746	267	19
19207	12340693-1	9515-01-186-3111	267	21
19207	12340693-2		267	21
19207	12340694-2	9515-01-189-9733	267	20
19207	12340695		365	15
34623	12340696		366	37
		2910-01-320-6645	384	11
19207	12340697		374	13
19207	12340700		374	19
19207	12340700-1		374	17
19207	12340700-10		374	10
19207	12340700-11		374	11
			374	24
19207	12340700-12		374	5
19207	12340700-14		377	4
19207	12340700-15		377	13
19207	12340700-16		377	9
19207	12340700-2		374	18
19207	12340700-3		374	18
19207	12340700-4		374	16
19207	12340700-6		374	16
19207	12340700-7		374	9
19207	12340700-8		374	21
19207	12340702		366	8
19207	12340703		366	35
19207	12340704		366	36
19207	12340706		368	43
19207	12340708	5340-01-466-5243	374	4
19207	12340708-1		374	6
19207	12340709-1	5340-01-203-3273	209	2
19207	12340709-2	5340-01-205-5118	209	2
19207	12340710	5340-01-198-0686	375	9
			375	13
			378	8
			378	14
19207	12340713	2540-01-206-4115	317	2
			321	3
			373	1
			376	2
19207	12340720	5342-01-196-5312	209	11
19207	12340721	5330-01-198-3521	429	27
			BULK	56
			BULK	70

CROSS-REFERENCE INDEXES

PART NUMBER INDEX

CAGEC	PART NUMBER	STOCK NUMBER	FIG.	ITEM
19207	12340721	5330-01-198-3521	BULK	73
19207	12340721-1.25		209	10
19207	12340722		365	2
19207	12340736-13	2540-01-450-4021	316	1
19207	12340736-18	2540-01-450-4017	316	1
19207	12340736-7	2540-01-314-2786	316	1
19207	12340736-8	2540-01-330-6173	316	1
19207	12340737-2	2540-01-330-6171	316	4
34623	12340737-3	2540-01-407-9241	316	4
19207	12340737-6	2540-01-450-4018	316	4
19207	12340747	2540-01-199-6760	318	2
19207	12340761	2540-01-189-3457	319	1
19207	12340761-2	2540-01-330-6169	319	1
19207	12340761-3	2540-01-450-7686	319	1
19207	12340761-9	2540-01-450-4015	319	1
19207	12340764-1	2540-01-199-6761	318	3
19207	12340764-2	2540-01-200-6611	318	1
19207	12340765	2540-01-189-3461	323	
19207	12340768	2540-01-197-8735	323	1
19207	12340777	2540-01-189-3707	322	1
19207	12340777-10	2540-01-450-4020	322	1
19207	12340777-15	2540-01-450-4024	322	1
19207	12340777-5	2540-01-330-6170	322	1
19207	12340779	2590-01-249-1588	286	19
19207	12340791	5340-01-395-0812	369	3
19207	12340792	5305-01-264-5874	199	50
			343	19
			495	9
19207	12340799	4720-01-214-5757	12	39
19207	12340814	7690-01-204-7785	360	1
34623	12340823	2510-01-421-8067	227	18
34623	12340824	2590-01-306-5881	227	9
19207	12340828	4710-01-251-3073	227	5
34623	12340829-1	3040-01-197-5510	368	41
19207	12340832-3	2590-01-212-1057	268	30
19207	12340832-4	2590-01-210-6202	268	30
19207	12340836	2510-01-247-7968	226	4
19207	12340842	4210-01-259-5634	241	9
			241	14
19207	12340843	5995-01-309-2953	82	1
19207	12340845-2	5306-01-263-8889	35	20
			36	12
			37	17
			38	12
			408	35
			472	14
			475	21
			476	19
19207	12340845-3	5306-01-270-5448	35	21
			36	13
			38	13

CROSS-REFERENCE INDEXES

PART NUMBER INDEX

CAGEC	PART NUMBER	STOCK NUMBER	FIG.	ITEM
19207	12340845-4	5306-01-264-3531	408	36
			472	16
			475	24
			476	20
19207	12340846-1	5340-01-185-8820	240	14
19207	12340852	7690-01-204-7847	360	2
19207	12340860-1	2530-01-256-4914	152	20
19207	12340860-2	2530-01-257-3905	152	20
19207	12340867	9905-01-190-8425	354	12
19207	12340868	9905-01-185-3129	354	12
19207	12340869	5340-01-460-5291	199	24
19207	12340871	2510-01-373-0131	228	3
19207	12340872	2510-01-373-2783	228	1
34623	12340873	2510-01-373-7877	228	7
19207	12340874	2510-01-372-9734	228	4
19207	12340875	2510-01-374-0000	228	9
19207	12340876	2510-01-373-8445	228	8
19207	12340877	2510-01-373-2784	228	5
19207	12340879	5340-01-270-8489	338	23
			339	18
			486	10
19207	12340880	5310-01-472-7368	270	10
19207	12340890	7690-01-191-8793	359	4
19207	12340891	7690-01-189-3737	361	2
19207	12340892	7690-01-204-7850	361	8
19207	12340893	7690-01-189-3736	361	6
19207	12340894	7690-01-189-3738	361	1
19207	12340895	7690-01-204-7849	361	7
19207	12340896	7690-01-203-0161	361	4
19207	12340897	7690-01-189-3739	361	5
19207	12340898	7690-01-191-1313	359	1
19207	12340899	7690-01-189-3740	359	2
			361	3
19207	12340900	7690-01-191-1314	359	10
19207	12340901	7690-01-192-6371	359	3
19207	12340902	7690-01-191-1315	359	9
19207	12340903	7690-01-191-1316	359	8
19207	12340904	7690-01-190-8501	359	5
			360	3
19207	12340905	7690-01-192-6369	361	10
19207	12340906	7690-01-192-6370	361	9
19207	12340908	7690-01-191-1312	359	6
19207	12340909	7690-01-188-5144	356	5
19207	12340910	9905-01-204-7776	354	9
19207	12340912		404	1
19207	12340917	7690-01-256-4909	354	22
19207	12340923	7690-01-264-6536	358	4
19207	12340926-3	5330-01-298-6009	296	9
19207	12340927	5930-01-266-1811	58	14
19207	12340935	5340-01-272-7814	218	8
19207	12340940	5340-01-270-8483	214	6

CROSS-REFERENCE INDEXES

PART NUMBER INDEX

CAGEC	PART NUMBER	STOCK NUMBER	FIG.	ITEM
19207	12340941	5340-01-272-6578	219	2
34623	12340946	2540-01-357-8939	288	1
19207	12340952-1	5340-01-272-2635	289	7
19207	12340952-2	5340-01-273-1680	289	7
19207	12340955	2540-01-271-3771	289	12
19207	12340958	3040-01-270-7917	238	10
19207	12340961	5365-01-272-7482	300	14
19207	12340968	5340-01-270-8370	211	18
			212	15
19207	12340979	2540-01-270-9344	229	1
19207	12340983	5340-01-274-3021	52	15
19207	12340984	5365-01-269-8672	211	29
			212	31
19207	12340990-1	5340-01-272-6520	264	5
			265	5
19207	12340990-2	5340-01-270-8455	264	7
			265	6
19207	12340994-1	3040-01-271-3824	238	17
19207	12341000	6150-01-269-0067	89	1
19207	12341003	5975-01-270-8552	294	1
19207	12341004	5340-01-272-9109	294	3
19207	12341012	2540-01-271-3772	288	5
19207	12341020	2510-01-272-3951	288	12
34623	12341027	2990-01-383-5689	401	16
19207	12341045-1	5340-01-272-5652	289	21
19207	12341045-2	5340-01-272-4962	289	21
19207	12341049	4710-01-271-7937	287	30
19207	12341064	5340-01-272-8405	289	17
19207	12341073	2510-01-265-3155	293	17
34623	12341076	2540-01-275-6202	287	21
19207	12341081-2	2510-01-265-3283	297	9
19207	12341082-1	2510-01-265-3281	297	3
			297	10
19207	12341082-2	2510-01-265-3282	291	7
			291	7
			297	10
19207	12341088	2540-01-271-2839	347	9
34623	12341092-1	2510-01-265-3194	293	22
19207	12341108	5985-01-269-8274	341	4
19207	12341109		214	24
34623	12341109-2		213	31
19207	12341111	5342-01-266-5691	217	1
19207	12341112	2510-01-272-3953	288	16
19207	12341113	2540-01-276-1451	224	5
			237	15
19207	12341119	5340-01-266-5708	224	14
19207	12341120	2510-01-272-0536	224	3
19207	12341125	6150-01-269-5300	92	1
19207	12341125-1		92	3
19207	12341132	2540-01-271-1946	288	27
19207	12341133	2540-01-270-5065	238	5

CROSS-REFERENCE INDEXES

PART NUMBER INDEX

CAGEC	PART NUMBER	STOCK NUMBER	FIG.	ITEM
19207	12341135	2540-01-271-8009	238	9
19207	12341138		238	8
19207	12341139	2540-01-268-7203	299	3
19207	12341142	2510-01-266-5690	218	3
19207	12341143-1	2540-01-271-2840	289	3
19207	12341143-2	2540-01-271-2841	289	3
19207	12341145-1	2590-01-271-3770	289	26
19207	12341145-2	2590-01-271-9807	289	26
19207	12341151	5999-01-372-5601	39	80
			41	16
			475	26
			476	25
19207	12341155	2540-01-266-5702	229	3
34623	12341168	2540-01-271-1991	293	20
19207	12341176	2540-01-265-3160	292	7
19207	12341205	2540-01-270-6541	237	2
34623	12341206	2540-01-270-6540	237	2
19207	12341207	6150-01-269-5298	95	1
19207	12341211-1	5330-01-265-8803	293	1
19207	12341211-2	5330-01-265-8807	223	1
19207	12341211-3	5330-01-265-8806	223	3
19207	12341211-4	5330-01-265-9231	293	33
19207	12341211-8	5330-01-265-8947	223	1
19207	12341211-9	5330-01-265-8946	223	3
19207	12341217	2510-01-266-4003	215	3
19207	12341218	2510-01-270-7922	222	23
19207	12341219	2510-01-272-0537	222	6
19207	12341227	2540-01-270-3776	337	21
19207	12341229	5340-01-266-3843	346	4
19207	12341231-1	5365-01-273-4690	338	3
19207	12341231-2	5365-01-272-8435	93	24
			95	41
19207	12341231-3	5365-01-274-3573	339	26
19207	12341231-4	5365-01-272-9275	96	31
19207	12341231-5	5365-01-383-3722	304	6
19207	12341231-6	5365-01-381-2215	303	8
19207	12341239	6220-01-269-7066	65	12
34623	12341246	2540-01-270-9711	238	4
19207	12341250	2510-01-280-4240	293	2
19207	12341271	2990-01-265-3297	346	2
19207	12341276	5340-01-274-3295	293	13
19207	12341281	5340-01-272-9145	222	16
19207	12341286	4130-01-265-8691	344	1
19207	12341293	6150-01-269-5299	94	1
19207	12341294	6150-01-269-5275	91	1
19207	12341299	5340-01-274-3184	237	14
19207	12341316	5340-01-273-2342	214	8
19207	12341320-2	2540-01-270-6458	290	4
19207	12341320-4	2540-01-271-9806	289	15
19207	12341320-6	9330-01-269-7114	287	17
19207	12341324	5365-01-272-4866	237	4

CROSS-REFERENCE INDEXES

PART NUMBER INDEX

CAGEC	PART NUMBER	STOCK NUMBER	FIG.	ITEM
19207	12341326	7690-01-266-5706	59	20
19207	12341332	5365-01-272-4867	237	10
19207	12341348	5330-01-458-3810	269	4
19207	12341353-1	5310-01-272-7449	238	23
			287	26
19207	12341354	5315-01-273-0096	287	22
19207	12341382	5340-01-386-6067	292	4
19207	12341384	5340-01-365-8796	287	4
19207	12341385	5340-01-397-1388	262	1
19207	12341388	5315-01-269-8504	213	17
			214	13
19207	12341399	5310-01-272-9985	289	25
19207	12341401	5365-01-272-9082	308	6
19207	12341403	2510-01-265-6953	214	16
19207	12341407	5365-01-269-8671	211	8
			212	5
19207	12341408	6150-01-269-1840	58	13
			90	1
19207	12341413	5340-01-272-8409	215	2
19207	12341414	4730-01-270-9652	311	11
			312	7
19207	12341416	5945-01-266-1810	59	5
19207	12341418	2510-01-273-8376	213	35
34623	12341420	4710-01-265-3229	335	7
			336	4
19207	12341429	2510-01-274-4901	222	24
19207	12341440	4710-01-265-3275	334	10
19207	12341450	2540-01-271-3828	236	2
19207	12341451	2540-01-270-6537	236	3
19207	12341452	2540-01-270-6538	236	4
19207	12341458	6150-01-269-1897	93	1
19207	12341466	5985-01-269-8272	340	6
19207	12341467	5975-01-270-4587	58	3
19207	12341485	5340-01-272-3353	213	3
19207	12341486	5340-01-277-8125	213	40
19207	12341487	5330-01-272-7471	347	8
34623	12341489-2	5365-01-272-6574	298	2
19207	12341490	5340-01-273-0136	260	5
19207	12341491	5340-01-273-2381	215	8
19207	12341492	5975-01-275-2695	229	4
19207	12341496	5340-01-272-7495	287	2
19207	12341499	2540-01-270-6460	290	9
19207	12341500-1	5340-01-270-8432	212	22
			258	8
19207	12341500-2	5340-01-270-8433	211	20
			212	18
19207	12341500-3	5340-01-270-8431	212	25
			258	10
			259	13
			260	24
19207	12341507		290	6

CROSS-REFERENCE INDEXES

PART NUMBER INDEX

CAGEC	PART NUMBER	STOCK NUMBER	FIG.	ITEM
19207	12341514	5330-01-272-7472	347	6
19207	12341533	2510-01-270-7919	347	5
19207	12341535	2540-01-271-3769	300	9
19207	12341536	2510-01-266-5711	216	10
19207	12341544	6220-01-270-1454	64	19
19207	12341551	4520-01-270-5080	298	4
19207	12341552	5340-01-270-4415	298	1
			346	7
19207	12341553	4520-01-271-2949	300	11
19207	12341555	2540-01-270-6539	236	5
19207	12341556-1	2510-01-272-0538	288	14
19207	12341556-2	2510-01-272-3952	288	14
19207	12341565	5340-01-265-8858	289	23
19207	12341575	5340-01-297-4127	64	1
19207	12341582-1	4710-00-541-4935	288	11
19207	12341582-2	4710-01-270-9507	288	8
19207	12341583	4730-01-265-3166	301	6
			303	1
			304	1
			305	3
			306	1
			309	2
			310	2
19207	12341584	4730-00-476-7127	302	3
			303	4
			304	11
			305	5
			306	3
			309	10
19207	12341585	4730-00-476-5859	302	6
			303	15
			305	8
			306	6
			309	4
			310	6
19207	12341586	4730-01-265-3285	304	3
			306	5
			309	6
19207	12341586-3	4720-01-384-1212	301	5
19207	12341587-20		301	7
			303	13
19207	12341591	4720-01-271-6151	300	6
19207	12341599	5340-01-273-2368	490	6
34623	12341606-2	4730-01-382-3165	302	1
			305	1
19207	12341610	4140-01-265-3151	342	1
19207	12341614	4720-01-270-9618	310	8
19207	12341615-1	6150-01-269-1861	56	19
19207	12341615-3	6150-01-269-1862	56	20
19207	12341616	6150-01-269-1859	56	5
19207	12341617	5330-01-272-2601	222	4

CROSS-REFERENCE INDEXES

PART NUMBER INDEX

CAGEC	PART NUMBER	STOCK NUMBER	FIG.	ITEM
19207	12341621	9905-01-265-1132	59	22
19207	12341622	9905-01-265-1131	59	22
19207	12341625-2	5330-01-265-8948	213	1
34623	12341627	5325-01-289-6196	95	45
19207	12341637	5340-01-265-8924	216	6
19207	12341639	5940-01-272-5800	52	26
19207	12341640	5365-01-477-2843	227	33
19207	12341641	5340-01-381-1266	401	19
19207	12341657	5330-01-290-2709	337	9
19207	12341661	5340-01-289-3244	342	7
34623	12341662	2940-01-290-5014	337	8
19207	12341670	5365-01-272-2806	289	18
19207	12341679		222	7
19207	12341680		495	3
19207	12341689	2510-01-271-7085	228	10
19207	12341698	5330-01-272-9995	219	8
19207	12341700	5330-01-274-6106	296	5
19207	12341711-1	5342-01-264-6533	212	2
19207	12341711-2	5342-01-265-3672	212	2
19207	12341714	5342-01-270-7921	307	13
			308	1
34623	12341726	5920-01-270-0090	52	10
			59	13
19207	12341730	5340-01-273-1721	492	3
34623	12341746	5340-01-276-7415	213	7
19207	12341749	5935-01-269-5994	52	4
			57	3
34623	12341751	5930-01-287-6698	58	5
19207	12341757	9905-01-266-3913	362	2
19207	12341778	2510-01-265-1126	213	21
19207	12341779	2510-01-265-1130	214	28
19207	12341782-1	2510-01-265-1140	212	1
19207	12341782-2	2510-01-265-1141	212	1
19207	12341791-1	5305-01-272-8322	292	22
19207	12341791-2	5305-01-272-8323	292	20
19207	12341793	4820-00-287-5627	335	17
19207	12341795-1	4720-01-265-3237	301	1
19207	12341795-2	4720-01-265-3222	301	2
19207	12341796	5330-01-272-7727	223	2
19207	12341798	5340-01-271-5866	211	5
			291	3
			291	3
			297	5
			297	5
19207	12341800	5310-01-327-0387	337	15
19207	12341802	5340-01-265-8922	238	2
19207	12341809	3040-01-270-9466	37	6
19207	12341812	9905-01-190-8427	354	12
19207	12341813	2540-01-271-1955	311	18
19207	12341814	2540-01-271-1954	311	6
19207	12341815	5305-01-255-2670	243	1

CROSS-REFERENCE INDEXES

PART NUMBER INDEX

CAGEC	PART NUMBER	STOCK NUMBER	FIG.	ITEM
19207	12341822	5305-01-270-7225	227	23
			228	2
			228	2
			228	2
			484	17
19207	12341836	9905-01-248-9547	355	4
19207	12341838	6220-01-269-7067	55	8
			56	10
19207	12341840	5961-01-266-3984	59	6
19207	12341848	5365-01-274-4674	338	5
19207	12341856	5310-01-286-6077	234	3
			239	4
19207	12341862	4720-01-265-3239	302	13
			305	2
34623	12341875	4140-01-303-1338	404	18
19207	12341876	5330-01-270-8315	340	4
			341	3
			426	15
			427	15
19207	12341883	4730-01-297-5111	337	5
34623	12341888	5640-01-309-3867	200	1
34623	12341889	5640-01-309-3868	200	2
19207	12341891	5340-01-287-5825	227	34
19207	12341897	5310-01-289-5455	154	4
19207	12341900	5340-01-301-7929	147	10
19207	12341910	2540-01-277-2313	52	1
19207	12341967-1	5365-01-265-8937	438	15
34623	12341967-2	5365-01-265-8938	283	16
			438	15
19207	12341967-3	5365-01-265-8939	283	16
			438	15
34623	12341968	5365-01-277-2387	283	13
			438	13
19207	12341969	5340-01-265-8905	283	20
			438	19
34623	12341976	4720-01-265-3224	492	13
19207	12342000-1	5340-01-294-3230	300	3
19207	12342000-2	5340-01-294-4415	300	2
19207	12342000-3	5340-01-306-3606	300	4
19207	12342002	5365-01-298-7780	293	28
19207	12342003		293	4
34623	12342005	5340-01-296-2814	294	6
34623	12342007	4010-01-299-7699	293	24
19207	12342022		92	8
19207	12342024	7690-01-315-8540	380	11
19207	12342026	9905-01-317-7987	380	6
19207	12342027	9905-01-317-7986	380	10
19207	12342036	5340-01-448-4245	472	13
19207	12342038	2540-01-350-9380	379	18
9C234	12342040	1005-01-321-6774	431	KITS
19207	12342043	5340-01-324-1076	431	6

CROSS-REFERENCE INDEXES

PART NUMBER INDEX

CAGEC	PART NUMBER	STOCK NUMBER	FIG.	ITEM
19207	12342044-1	5340-01-295-8169	431	1
19207	12342044-2	5340-01-295-1088	431	5
19207	12342045	3040-01-327-1426	431	4
19207	12342047	2540-01-313-0678	230	6
34623	12342061	2540-01-314-7835	230	7
34623	12342068	2540-01-314-7834	230	1
			235	1
19207	12342074	5340-01-292-8404	408	24
19207	12342076	5340-01-292-5402	408	23
			475	7
19207	12342077	3990-01-314-8393	199	19
			199	19
			199	19
			199	19
			251	20
			270	12
			296	3
19207	12342082	2540-01-197-5449	365	6
19207	12342083	4730-01-322-9871	368	15
19207	12342085	5342-01-326-2583	365	19
19207	12342086	2910-01-323-0123	368	35
19207	12342087-1	2540-01-394-6167	368	11
19207	12342087-2	2990-01-322-9880	365	11
19207	12342088	2540-01-197-5460	365	23
19207	12342089	2990-01-394-3751	365	12
19207	12342091	2990-01-322-9881	368	13
19207	12342092	5365-01-326-1153	368	25
19207	12342093	2990-01-322-9879	368	17
19207	12342094	2990-01-323-2562	365	7
19207	12342095	4710-01-313-9340	379	31
19207	12342096	4730-01-311-4294	17	4
19207	12342097		353	2
19207	12342099		353	3
19207	12342102	4910-01-313-8839	353	1
19207	12342102-1	4030-01-406-9325	353	5
19207	12342102-2		353	10
19207	12342102-3		353	4
19207	12342102-4	4010-01-410-9099	353	9
19207	12342103		365	3
19207	12342104	5330-01-314-6781	104	21
19207	12342105	5330-01-315-1609	104	20
			105	27
19207	12342106		104	22
19207	12342106-3		104	22
19207	12342107	5340-01-314-5602	104	19
			105	26
19207	12342121	5315-01-406-5019	353	6
34623	12342129	2540-01-314-9380	432	1
34623	12342130	2540-01-314-9379	432	1
19207	12342131	2540-01-314-1188	329	2
19207	12342132	5340-01-315-3611	329	10

CROSS-REFERENCE INDEXES

PART NUMBER INDEX

CAGEC	PART NUMBER	STOCK NUMBER	FIG.	ITEM
19207	12342134	5340-01-316-1507	329	17
19207	12342135	5340-01-314-1955	329	17
19207	12342136	5340-01-316-2959	329	15
19207	12342137	5340-01-314-1956	329	15
19207	12342138	2540-01-314-2101	329	5
19207	12342139	5365-01-315-3595	329	4
19207	12342141	4010-01-406-6963	353	8
34623	12342142	2520-01-316-2630	178	11
			436	6
19207	12342144	5340-01-311-1633	104	18
19207	12342144-1	5342-01-448-4215	104	18
80212	12342152	2590-01-333-2999	377	12
19207	12342153-1	2540-01-329-8649	378	1
19207	12342153-2	2540-01-336-0791	378	4
19207	12342155	2510-01-330-2250	378	11
19207	12342157	2510-01-330-2249	378	11
19207	12342165	7690-01-315-8539	354	3
19207	12342166	2510-01-316-0216	389	8
19207	12342170		382	11
19207	12342171-1		382	7
19207	12342171-2		382	7
19207	12342173	2590-01-317-4854	393	8
34623	12342175	2590-01-317-0534	389	13
19207	12342177		383	6
19207	12342178		383	1
34623	12342179	2590-01-317-4856	383	3
19207	12342181		382	3
19207	12342182-2		382	3
19207	12342184		382	12
19207	12342187	2540-01-315-3762	395	6
19207	12342189	2540-01-320-8918	388	13
19207	12342191	4520-01-316-2585	387	9
19207	12342193	6150-01-324-6355	387	18
19207	12342195	2590-01-317-3952	395	2
19207	12342201	5340-01-320-2060	393	2
34623	12342203	2590-01-317-3953	383	4
19207	12342210	5365-01-316-8966	382	2
34623	12342213	2540-01-316-2597	387	6
19207	12342216	2590-01-317-8292	395	3
19207	12342218	5340-01-318-2040	391	2
19207	12342219	5340-01-318-2041	392	10
19207	12342220-1		391	4
19207	12342220-2		391	8
19207	12342221		391	5
19207	12342226		391	3
19207	12342234	5340-01-317-9086	391	7
19207	12342235	5340-01-319-9426	391	9
19207	12342237	5365-01-316-8985	392	5
19207	12342248	5330-01-317-5392	393	5
19207	12342255	6150-01-324-6356	383	9
19207	12342256	4520-01-317-0929	387	3

CROSS-REFERENCE INDEXES

PART NUMBER INDEX

CAGEC	PART NUMBER	STOCK NUMBER	FIG.	ITEM
19207	12342260	5340-01-317-2675	388	17
19207	12342261-1	4720-01-476-4656	393	17
34623	12342264	2590-01-317-0535	389	13
19207	12342265		382	11
19207	12342266	5340-01-317-7501	389	5
34623	12342270	4710-01-317-1045	385	7
34623	12342276	4710-01-317-1044	387	14
34623	12342277	4710-01-317-1046	384	2
19207	12342281	5340-01-325-2891	433	6
19207	12342284	5340-01-318-3366	433	3
19207	12342285	5340-01-318-0212	433	11
19207	12342287	4010-01-466-0849	462	7
19207	12342294	2930-01-314-0145	379	33
19207	12342295	5340-01-333-6038	197	3
34623	12342301	2540-01-317-1024	390	10
19207	12342303	6150-01-317-5853	72	25
			434	1
			435	1
19207	12342306	5340-01-315-7223	72	23
			73	10
19207	12342308		201	6
19207	12342309		201	3
19207	12342310		201	4
19207	12342311		201	5
19207	12342312		201	1
19207	12342313		201	2
19207	12342314	2540-01-337-0242	323	5
34623	12342332	2540-01-317-0820	390	1
19207	12342338	5305-01-315-8649	69	33
			434	4
			435	9
19207	12342343	5330-01-318-1998	395	5
19207	12342344	5330-01-318-9780	395	7
19207	12342345	5330-01-317-5393	395	4
19207	12342354	4030-01-316-1551	183	2
			185	12
			187	16
			188	12
19207	12342355	5330-01-334-2834	205	5
			206	5
19207	12342357	5330-01-340-5627	205	6
19207	12342358	5330-01-341-8963	206	6
19207	12342361	5340-01-317-1470	181	4
19207	12342362	5340-01-317-0147	181	17
19207	12342372	5340-01-334-4241	234	20
34623	12342373	2590-01-315-9128	188	8
19207	12342374	5340-01-334-2887	239	5
19207	12342381	5340-01-333-5851	234	8
19207	12342383	5340-01-336-3004	251	27
			252	27
			253	22

CROSS-REFERENCE INDEXES

PART NUMBER INDEX

CAGEC	PART NUMBER	STOCK NUMBER	FIG.	ITEM
19207	12342383	5340-01-336-3004	254	27
			255	21
19207	12342387	2510-01-358-1178	187	4
			456	1
19207	12342388	2510-01-357-8789	187	4
			456	1
19207	12342389	2510-01-358-1176	187	7
			456	21
19207	12342390	2510-01-358-1177	187	7
			456	21
19207	12342395	2540-01-361-8206	187	1
19207	12342404	2590-01-316-0084	185	9
			186	14
			187	13
34623	12342408	2510-01-350-4949	203	3
19207	12342412		437	1
19207	12342418	5340-01-332-7516	437	9
34623	12342435-1	2930-01-471-0622	28	5
19207	12342439	7690-01-350-2094	358	4
34623	12342440		169	31
34623	12342441	2540-01-395-8785	375	1
19207	12342442	2540-01-197-5528	375	4
19207	12342455	2510-01-335-7363	227	10
19207	12342475	2540-01-314-2782	320	2
19207	12342475-1	2540-01-330-6172	320	2
19207	12342475-2	2540-01-413-1356	320	2
19207	12342475-6	2540-01-450-5477	320	2
19207	12342495	5340-01-385-0057	377	3
19207	12342496	5340-01-396-8322	377	3
34623	12342499-1	5305-01-259-6322	58	2
			59	26
			79	16
			88	5
			88	26
			227	3
			227	3
			286	41
			303	14
			310	5
			332	29
			335	3
			338	17
			339	10
			368	7
			424	5
			426	24
			427	24
			468	10
19207	12342499-2	5305-01-264-5809	155	10
			226	33
			227	36

CROSS-REFERENCE INDEXES

PART NUMBER INDEX

CAGEC	PART NUMBER	STOCK NUMBER	FIG.	ITEM
19207	12342501	2540-01-186-0969	327	10
19207	12342501-1		327	11
19207	12342503		179	1
19207	12342510	5340-01-358-7595	180	26
19207	12342545	5307-01-408-4029	33	20
			37	18
			408	39
			475	25
			476	23
34623	12342565	2990-01-299-8820	401	13
19207	12342566	2990-01-382-8796	401	6
19207	12342567-2	2990-01-385-8988	401	5
19207	12342569	5365-01-381-1783	401	7
19207	12342570	2540-01-395-4202	370	6
19207	12342571	5340-01-394-7853	369	9
34623	12342572	2540-01-407-3296	369	5
19207	12342573	5340-01-393-9371	369	11
34623	12342602	3040-01-358-7034	488	18
19207	12342605	4710-01-395-3982	366	11
19207	12342606	4710-01-394-6169	366	15
19207	12342616	5360-01-357-2413	192	1
34623	12342620	2520-01-356-9189	136	6
19207	12342625	7690-01-358-9391	361	11
19207	12342633	5331-01-335-8878	167	16
19207	12342634	2640-01-335-4583	167	23
19207	12342638	2640-01-334-9453	167	17
62161	12342639	2530-01-338-2730	167	18
19207	12342640	2530-01-336-3127	167	19
19207	12342641		167	13
19207	12342642	2530-01-336-5740	167	14
19207	12342643-1	2520-01-452-7569	126	2
			127	3
19207	12342645	3040-01-358-2102	152	17
19207	12342646	5340-01-378-5201	69	16
19207	12342647	5340-01-378-7525	69	17
19207	12342648	9905-01-397-3196	370	12
19207	12342652	9905-01-364-7342	354	12
19207	12342653	9905-01-362-2014	355	4
19207	12342654	5935-01-415-4322	76	18
34623	12342655	4730-01-439-2814	496	23
19207	12342658	5340-01-358-6697	74	3
19207	12342661	2540-01-411-7519	453	10
19207	12342662	5340-01-406-6964	453	13
19207	12342663	5340-01-406-6965	453	8
19207	12342664	5340-01-406-7418	453	6
19207	12342665	5340-01-407-7192	453	17
19207	12342679	5340-01-380-4561	153	1
19207	12342680	5310-01-382-5031	142	19
			143	26
			150	19
			151	26

CROSS-REFERENCE INDEXES

PART NUMBER INDEX

CAGEC	PART NUMBER	STOCK NUMBER	FIG.	ITEM
19207	12342681	5930-01-347-9216	327	12
19207	12342682	5355-01-353-6934	327	14
9C234	12342683	2590-01-394-9672	234	4
19207	12342688	5120-01-335-5847	505	6
19207	12342711	3120-01-413-6106	40	42
			407	44
19207	12342712	5935-01-415-4392	75	20
			76	20
34623	12342745	2910-01-357-8798	15	1
19207	12342746	5340-01-357-3996	15	10
			16	9
19207	12342747	4710-01-358-6397	13	22
			14	8
19207	12342748	4710-01-358-2127	13	21
			14	7
19207	12342751	5365-01-394-0440	370	14
19207	12342752	5365-01-394-2394	369	6
19207	12342754	5340-01-394-7288	370	22
9C234	12342755-2	2540-01-395-3979	372	3
19207	12342757	4730-01-357-8739	13	23
			14	9
19207	12342784	2590-01-377-6819	250	7
19207	12342785	5340-01-476-6587	250	8
19207	12342786	5340-01-476-6205	250	11
19207	12342787	5340-01-476-6182	250	12
34623	12342788	6220-01-362-5211	97	9
19207	12342789	6150-01-362-5229	81	8
19207	12342793	4730-01-346-1063	167	24
19207	12342794	5331-01-346-3806	167	25
19207	12342795	5340-01-381-2045	401	17
19207	12342801	5340-01-381-1808	140	9
19207	12342805		278	3
19207	12342806	7690-01-407-8248	370	15
19207	12342808	2930-01-385-9108	333	19
19207	12342809	5340-01-381-2248	333	16
19207	12342855		455	1
19207	12342859	5365-01-406-6336	455	4
19207	12342864	5310-01-415-5245	76	19
34623	12342872	5330-01-452-2474	12	27
34623	12342875	2530-01-383-5740	169	9
19207	12342876	2530-01-384-7154	169	13
34623	12342878-1		379	20
19207	12342878-2	2540-01-451-9345	379	20
19207	12342880	2540-01-445-6029	379	17
19207	12342881	2835-01-465-7620	379	19
19207	12342883	5340-01-406-7413	455	8
19207	12342884	5340-01-408-8526	455	7
19207	12342886	5330-01-381-1810	327	35
19207	12342893	2910-01-168-7905	9	1
34623	12342898	2530-01-357-9776	163	7
19207	12342900	4710-01-358-1943	159	1

CROSS-REFERENCE INDEXES

PART NUMBER INDEX

CAGEC	PART NUMBER	STOCK NUMBER	FIG.	ITEM
19207	12342900	4710-01-358-1943	160	12
19207	12342901	4710-01-357-9968	161	6
19207	12342902	6150-01-396-0906	386	2
19207	12342903	5340-01-394-2409	390	12
19207	12342911	2530-01-386-5499	167	18
19207	12342917	5935-01-384-2610	73	1
19207	12342920	5935-01-397-3813	73	5
19207	12342924	5935-01-396-3991	73	14
19207	12342925	5310-01-406-9129	73	16
19207	12342930	4140-01-394-8583	407	42
19207	12342935		15	17
19207	12342938		15	18
19207	12342943	4910-01-185-7966	504	2
19207	12342944		405	3
19207	12342947	4730-01-399-0241	178	16
34623	12342949	4710-01-412-0273	14	1
34623	12342950	4710-01-413-1360	14	5
34623	12342951-1	4730-01-412-5216	14	13
34623	12342951-2	4730-01-412-5213	14	27
19207	12342953-2	4820-01-456-0172	19	23
19207	12342954	2590-01-396-1422	232	1
19207	12342955	2590-01-396-1424	232	1
19207	12342965	5340-01-394-2408	155	15
19207	12342966	5340-01-394-8496	155	20
19207	12342972-1		179	1
			179	1
19207	12342972-2		179	1
19207	12342980	9905-01-392-5795	355	4
19207	12342981	9905-01-384-5311	354	12
19207	12342986	9905-01-387-2761	354	12
19207	12342987	9905-01-393-3795	355	4
19207	12342991	9905-01-393-1834	355	4
19207	12342992	9905-01-397-6974	354	12
19207	12342993	9905-01-392-5796	355	4
19207	12342995	9905-01-387-2752	354	12
19207	12342997	9905-01-393-9357	354	12
19207	12342999	9905-01-393-1830	355	4
19207	12343001	9905-01-392-5798	355	4
19207	12343002	9905-01-393-5622	354	12
19207	12343010	9905-01-387-1145	354	12
19207	12343011	9905-01-392-5797	355	4
19207	12343018	9905-01-393-7128	355	4
19207	12343020	9905-01-385-2639	354	12
19207	12343023	9905-01-387-2746	354	12
19207	12343025	9905-01-392-5799	355	4
19207	12343040	9905-01-392-5800	355	4
19207	12343041	9905-01-385-2633	354	12
19207	12343043	9905-01-392-5794	355	4
19207	12343044	9905-01-387-2762	354	12
19207	12343046	9905-01-387-1146	354	12
19207	12343048	9905-01-393-1833	355	4

CROSS-REFERENCE INDEXES

PART NUMBER INDEX

CAGEC	PART NUMBER	STOCK NUMBER	FIG.	ITEM
19207	12343049	9905-01-392-5796	355	4
19207	12343050	9905-01-393-5623	354	12
19207	12343053	2540-01-383-5660	231	4
19207	12343054	7690-01-382-8471	354	14
19207	12343055	5365-01-382-0986	454	5
19207	12343058	9905-01-393-3794	354	8
19207	12343059	6160-01-384-3922	231	31
19207	12343062	5340-01-408-6456	329	17
			461	2
19207	12343063	5340-01-408-6460	329	15
			461	7
19207	12356703-1	5980-01-187-0791	46	3
19207	12356703-3	6220-01-273-0500	47	4
19207	12356704	5930-01-183-6757	67	7
19207	12356764-1	5360-01-315-7212	316	11
			320	10
			320	22
			320	22
			324	13
			324	27
			375	18
			378	18
19207	12356764-2	5360-01-315-7211	316	11
			320	10
			324	13
			324	27
			378	18
19207	12356766	5930-01-318-2809	380	8
19207	12356789	5330-01-319-7302	387	10
19207	12356795	5365-01-289-6169	92	18
19207	12357116	5365-01-289-4434	35	10
19207	12357126	5365-01-289-7852	35	11
19207	12360850-1	6220-01-284-2709	61	8
19207	12360865	5961-01-305-8848	60	8
19207	12360870-2	6220-01-297-3217	61	9
19207	12368374	5340-01-314-2445	379	35
19207	12368375	5340-01-315-4955	379	15
19207	12368387	5340-01-320-1079	379	45
19207	12368390	5340-01-314-6838	379	51
19207	12368391	5340-01-315-4120	379	47
19207	12368392	5340-01-314-5567	379	11
19207	12368394	6150-01-315-1148	381	3
19207	12368395	6150-01-314-5241	381	4
19207	12368396	6150-01-314-5643	381	1
19207	12368397-2	5365-01-314-5544	379	4
			379	6
19207	12368398	2540-01-314-1130	379	26
34623	12368400	2540-01-317-3309	379	28
19207	12368443	2990-01-314-0151	379	30
19207	12375837	6220-01-372-3883	61	4
19207	12375838		61	5

CROSS-REFERENCE INDEXES

PART NUMBER INDEX

CAGEC	PART NUMBER	STOCK NUMBER	FIG.	ITEM
19207	12375841	6220-01-359-2870	61	10
19207	12380024	3020-01-480-8698	33	17
96906	12387349-43		185	8
		5310-00-061-4651	194	12
			457	20
			470	12
19207	12412123	5310-01-374-4512	261	3
19207	12420924-004	4720-01-421-9718	BULK	75
9C234	12446700	2540-01-383-5232	227	2
19207	12446701	2540-01-384-1012	227	26
19207	12446702	2540-01-384-1028	227	27
19207	12446706	5340-01-473-4800	241	15
34623	12446709	2540-01-447-3457	231	9
34623	12446714	2540-01-381-8988	231	18
19207	12446724	5340-01-387-0090	231	5
19207	12446725	2590-01-466-7250	273	6
19207	12446727		273	15
19207	12446730	5340-01-457-1778	273	18
19207	12446734	7690-01-445-0456	361	11
19207	12446735	5365-01-380-7340	231	23
19207	12446736	5365-01-382-1178	231	30
19207	12446737	6160-01-384-0325	231	32
19207	12446739	2590-01-396-5007	233	3
9C234	12446741	2590-01-394-9673	233	3
19207	12446751	4820-01-431-2499	19	10
34623	12446753	3020-01-466-3603	476	10
34623	12446754	2590-01-466-5447	479	2
19207	12446755	5342-01-466-6283	476	24
19207	12446758	5342-01-466-6276	476	5
19207	12446762	2590-01-406-9821	252	8
34623	12446763	2590-01-439-8268	332	33
			411	20
19207	12446765	5340-01-476-4374	332	4
19207	12446767	3040-01-197-8727	272	26
19207	12446770	5340-01-457-0459	205	16
19207	12446771		205	13
19207	12446772	2540-01-411-2737	254	8
34623	12446773	2590-01-411-3958	210	9
19207	12446774	5340-01-408-6459	210	12
19207	12446780	7690-01-458-8254	354	12
19207	12446782	9905-01-448-9783	355	4
19207	12446783	9905-01-446-5769	354	12
19207	12446785	9905-01-446-6187	355	4
19207	12446786	9905-01-447-7799	354	12
19207	12446788	9905-01-448-9784	355	4
19207	12446789	9905-01-448-9786	354	12
19207	12446791	9905-01-446-5768	355	4
19207	12446792	9905-01-446-5770	354	12
19207	12446794	9905-01-446-5771	355	4
19207	12446798	7690-01-450-5481	354	12
19207	12446801	9905-01-449-0476	355	4

CROSS-REFERENCE INDEXES

PART NUMBER INDEX

CAGEC	PART NUMBER	STOCK NUMBER	FIG.	ITEM
34623	12446802	2530-01-411-2735	169	8
19207	12446803	2530-01-411-2729	169	6
19207	12446806		457	17
19207	12446811	3990-01-411-6575	210	7
19207	12446812	5340-01-415-8672	210	2
19207	12446813	5340-01-429-9352	210	1
34623	12446814	2510-01-411-4175	210	8
34623	12446819	2540-01-410-8793	352	4
			459	4
19207	12446821-1		41	13
19207	12446821-2	6150-01-467-6716	41	1
			472	5
			474	10
19207	12446821-3	6150-01-417-3411	69	35
19207	12446821-4		44	12
19207	12446821-5		41	1
19207	12446821-6	6150-01-466-7528	472	18
19207	12446825	6150-01-416-7899	70	12
			474	10
			475	4
19207	12446828	6150-01-412-3192	76	1
19207	12446845-1	6220-01-418-4404	63	8
19207	12446845-2	5980-01-443-9093	63	8
19207	12446846	2540-01-473-6304	227	37
19207	12446847	2540-01-473-7521	227	42
19207	12446848	2540-01-473-7553	227	52
19207	12446849	2540-01-473-8050	227	54
19207	12446850	2540-01-473-7544	227	45
19207	12446851	2540-01-473-7959	227	53
19207	12446852	2540-01-475-4708	227	51
19207	12446853	2540-01-473-8310	227	40
19207	12446854	2540-01-473-7107	227	41
19207	12446856	2510-01-473-8204	227	47
19207	12446857	5315-01-473-3682	227	43
19207	12446858	5340-01-479-0211	227	38
34623	12446861	2510-01-359-2076	198	26
19207	12446868	2510-01-262-6011	198	26
19207	12446871-2	5310-01-411-3422	481	9
34623	12446878	2510-01-414-7846	226	4
19207	12446879	2510-01-413-3360	225	12
34623	12446880	2510-01-413-3259	226	4
19207	12446899	5340-01-408-6462	210	5
19207	12446900	5340-01-408-6458	210	6
19207	12446907	2510-01-456-7889	268	3
19207	12446908		269	1
19207	12446911	2510-01-476-2171	268	3
19207	12446912		269	1
19207	12446913-1	2510-01-411-0653	267	8
19207	12446913-2	2510-01-413-3618	267	8
19207	12446914	7220-01-431-8340	210	10
34623	12446928	2590-01-410-9968	197	9

CROSS-REFERENCE INDEXES

PART NUMBER INDEX

CAGEC	PART NUMBER	STOCK NUMBER	FIG.	ITEM
19207	12446933	9540-01-472-5874	88	48
34623	12446953	2540-01-176-6521	205	12
19207	12446961	2540-01-461-1129	227	19
19207	12446966	2540-01-477-0162	454	2
19207	12446967	2540-01-477-0184	454	2
19207	12446973	2540-01-411-2733	188	7
19207	12446978-1		179	1
19207	12446981	2540-01-477-0242	397	14
19207	12446982	5340-01-450-7521	387	1
19207	12446983	2540-01-476-7827	397	13
19207	12446985	2930-01-405-9885	26	1
19207	12446987	3990-01-432-5370	199	19
19207	12446988	2510-01-410-7169	199	27
19207	12446989	5340-01-408-8523	188	16
19207	12446990	5340-01-408-8529	188	16
19207	12446991	5340-01-476-6243	188	21
19207	12446993	2590-01-410-9967	261	5
19207	12446998	2590-01-410-8791	261	6
19207	12446999	5340-01-408-8512	261	12
19207	12447000	5340-01-408-8509	261	10
19207	12447001	2590-01-478-6799	181	17
19207	12447003	7690-01-476-6510	354	10
19207	12447010-1	4720-01-474-9148	332	7
34623	12447010-2	4720-01-444-6433	332	11
19207	12447010-3	4720-01-445-5690	332	10
19207	12447011	7690-01-476-6089	354	4
34623	12447012	2540-01-444-6642	332	30
19207	12447013	5340-01-470-2069	332	28
19207	12447027	5305-01-449-1983	169	31
19207	12447028	4720-01-445-5705	332	41
34623	12447029	2510-01-411-0652	225	47
			226	27
			460	1
19207	12447035	5307-01-411-8340	261	4
19207	12447036	5315-01-408-7089	261	16
19207	12447037	5365-01-408-8507	261	2
34623	12447046	2540-01-447-2236	332	14
19207	12447047	2540-01-474-8562	332	36
34623	12447048	2540-01-444-6655	332	22
34623	12447050	2540-01-444-5340	332	20
19207	12447051		182	5
34623	12447053	2510-01-412-4969	180	15
19207	12447057-1	3120-01-448-6269	456	9
19207	12447057-2	3120-01-448-6268	456	12
19207	12447058	3120-01-440-0043	456	8
19207	12447060-1	3040-01-477-9645	456	11
34623	12447060-2	3040-01-444-3350	456	13
19207	12447073-4		125	5
19207	12447076	4820-01-456-6257	125	19
34623	12447077	4730-01-409-1204	125	18
19207	12447078	2540-01-411-3946	166	10

CROSS-REFERENCE INDEXES

PART NUMBER INDEX

CAGEC	PART NUMBER	STOCK NUMBER	FIG.	ITEM
19207	12447083	6220-01-408-7785	49	1
19207	12447084	6220-01-445-5058	49	11
34623	12447088	2590-01-444-3399	456	14
19207	12447089-1	5340-01-413-0282	186	12
			188	31
19207	12447089-2	5340-01-412-7514	188	10
19207	12447091	2540-01-412-8610	186	1
			456	3
19207	12447092	2590-01-412-7564	186	10
34623	12447093	2590-01-412-9560	186	10
19207	12447100	2590-01-412-9570	186	5
19207	12447101	2590-01-412-3862	186	5
19207	12447102	7690-01-445-0444	456	2
19207	12447103	5340-01-414-8959	77	23
19207	12447104	2590-01-448-6351	456	7
19207	12447108-1	2815-01-412-9289	1	2
19207	12447109	2920-01-420-9968	38	4
			40	1
19207	12447110	2920-01-407-0532	36	4
			407	1
19207	12447123-1	5340-01-430-9240	321	25
			376	21
19207	12447124-1	5340-01-430-9239	321	25
			376	21
19207	12447125	2520-01-409-2512	126	2
			127	3
34623	12447130	2540-01-444-6615	332	19
19207	12447132	5340-01-449-7352	332	16
34623	12447143	2540-01-465-9030	463	13
34623	12447144	2540-01-466-3770	463	16
19207	12447145	5340-01-466-2425	463	18
19207	12447146	5340-01-466-1982	463	10
19207	12447148	5340-01-466-4086	463	20
19207	12447149	5310-01-465-9727	463	19
19207	12447150R		464	7
19207	12447151D		464	4
19207	12447163-2	2590-01-465-7756	463	5
19207	12447165	5340-01-412-0867	162	6
34623	12447166	4710-01-413-8230	162	3
34623	12447171	2590-01-448-1105	315	7
			457	12
19207	12447172	5330-01-447-4762	103	3
34623	12447173	2590-01-412-2664	103	7
34623	12447175	2520-01-464-1772	103	1
19207	12447177	5307-01-450-3072	180	9
19207	12460066		101	11
19207	12460070	6150-01-413-7946	70	2
			481	2
34623	12460081	2990-01-411-3954	24	5
19207	12460082	2540-01-414-1275	24	4
19207	12460083	5340-01-413-2689	24	11

CROSS-REFERENCE INDEXES

PART NUMBER INDEX

CAGEC	PART NUMBER	STOCK NUMBER	FIG.	ITEM
34623	12460086	2990-01-414-4072	24	28
34623	12460090	2990-01-411-3947	24	14
19207	12460091	2990-01-412-0142	24	16
19207	12460092-1	6220-01-413-9828	97	9
9C234	12460092-2	6220-01-412-6420	97	10
19207	12460093	5340-01-413-4486	105	23
19207	12460095	5330-01-413-2118	105	24
19207	12460097	6150-01-413-0853	81	19
19207	12460097-1	5935-01-442-8569	86	22
19207	12460098	6150-01-413-1847	82	1
19207	12460099	6150-01-413-1845	82	1
34623	12460102	2910-01-412-0047	14	29
34623	12460104	2910-01-411-2124	16	1
34623	12460105	2910-01-447-3911	16	13
19207	12460108-3	5330-01-409-1981	BULK	63
19207	12460108-3-AR		16	33
19207	12460108-5		16	17
34623	12460112	2520-01-413-2612	98	1
19207	12460116	5945-01-413-0886	50	12
19207	12460120	6150-01-412-7774	511	11
19207	12460130	5340-01-442-4876	86	33
19207	12460132	5935-01-412-9146	76	7
19207	12460136	5120-01-408-8173	511	13
19207	12460137	6150-01-410-8215	511	12
19207	12460140	5340-01-469-2979	16	15
34623	12460143	2510-01-444-3360	16	20
19207	12460145-1	5306-01-411-2338	16	27
			464	6
19207	12460145-2	5305-01-412-5995	16	28
			464	5
34623	12460146	3040-01-409-2500	101	9
19207	12460151	2530-01-413-1365	144	6
19207	12460156	7690-01-476-6507	354	8
19207	12460157	7690-01-476-6101	354	7
19207	12460159	5305-01-412-5994	144	12
			152	12
19207	12460163-1	2815-01-442-8077	1	2
19207	12460163-3	2815-01-439-5882	1	2
19207	12460163-5		1	2
19207	12460167	2530-01-414-7844	144	6
19207	12460176		167	13
34623	12460178	2530-01-417-8450	167	19
19207	12460179	5306-01-417-2467	167	15
19207	12460199	5340-01-448-1213	488	8
19207	12460205	9905-01-433-8554	354	6
34623	12460206	2590-01-188-7386	276	10
19207	12460208	5365-01-457-8947	273	24
19207	12460212	2540-01-475-3102	231	14
34623	12460213	2540-01-465-1197	231	19
19207	12460217		293	23
19207	12460218	5340-01-466-2611	485	22

CROSS-REFERENCE INDEXES

PART NUMBER INDEX

CAGEC	PART NUMBER	STOCK NUMBER	FIG.	ITEM
19207	12460219	5340-01-466-2606	485	20
19207	12460220-1	5340-01-471-1040	485	12
19207	12460220-2	5340-01-466-1985	485	19
19207	12460221	5340-01-466-2451	485	11
19207	12460222	5340-01-466-2438	485	18
19207	12460223	5305-01-471-7623	485	21
34623	12460224	2540-01-439-7308	21	21
19207	12460228	5980-01-438-7452	47	2
34623	12460229	3040-01-444-5640	51	11
34623	12460232	2530-01-423-1796	171	1
19207	12460233	2590-01-455-9123	332	13
19207	12460279	2590-01-466-5095	462	12
19207	12460280	5340-01-466-1978	462	5
19207	12460290	5340-01-457-5571	277	11
19207	12460305	4730-01-481-6278	177	4
19207	12460314	6680-01-466-7238	103	8
			400	4
19207	12460329	5340-01-451-5903	487	14
19207	12460330	5342-01-459-4992	487	1
19207	12460331	5340-01-469-5774	487	7
19207	12460353		33	14
19207	12460385	5365-01-469-6343	332	37
34623	12460386	2540-01-463-3097	332	39
34623	12460399	2520-01-481-6120	50	1
19207	12460407-1		50	3
19207	12460407-2		50	2
19207	12460414	5340-01-477-9397	463	5
19207	12460415	2540-01-466-3849	463	4
19207	12460416		474	15
19207	12460434	2540-01-455-9308	332	18
19207	12460442	2920-01-473-1763	36	11
19207	12460455		64	23
19207	12460490	2815-01-439-5881	1	2
19207	12460491	5340-01-442-0308	125	21
19207	12460492	4710-01-439-8165	125	4
19207	12460493	4710-01-439-8167	125	3
19207	12460495	5340-01-466-2620	480	11
19207	12460496	5340-01-466-2468	480	6
19207	12460498-1	6150-01-469-7941	480	34
19207	12460498-2	6150-01-469-7930	480	31
19207	12460498-3		480	16
19207	12460498-4	6150-01-470-7014	480	12
19207	12460502	5342-01-466-6280	476	14
19207	12460506	5340-01-457-0804	465	4
19207	12460507	5340-01-472-8534	98	11
19207	12460542-2	5340-01-433-0936	484	16
19207	12460543	5340-01-474-3279	484	8
19207	12460544	5340-01-474-0954	484	9
34623	12460547	2590-01-466-5250	468	6
19207	12460548	7690-01-466-5217	468	3
34623	12460550	2540-01-466-6114	462	1

CROSS-REFERENCE INDEXES

PART NUMBER INDEX

CAGEC	PART NUMBER	STOCK NUMBER	FIG.	ITEM
19207	12469029	6150-01-473-8663	483	4
19207	12469032	7690-01-475-1197	482	1
19207	12469034	2540-01-475-3129	482	15
19207	12469035	5330-01-475-1671	482	5
19207	12469043	6150-01-474-9676	482	4
19207	12469044	7690-01-469-9591	466	4
19207	12469045	7690-01-469-9596	467	6
19207	12469046	4710-01-457-0590	467	10
19207	12469047	5999-01-471-0710	482	7
19207	12469048		1	2
19207	12469061	4720-01-470-3076	178	23
19207	12469064	6150-01-473-1178	469	3
19207	12469065-1	6150-01-473-1169	469	1
19207	12469065-2	6150-01-473-1174	470	5
19207	12469066		469	5
19207	12469067		470	6
19207	12469100	7690-01-481-4906	355	4
19207	12469101	7690-01-481-4908	354	12
19207	12469106	3020-01-476-6520	175	4
19207	12469107		33	21
19207	12469158	6110-01-463-9260	49	4
08805	1251	6240-00-019-0877	63	4
7X677	12514590	5330-01-331-1207	KITS	
7X677	12534772	2930-01-444-6649	31	3
7X677	12551497	6685-01-444-9478	30	1
7X677	12551591	5330-01-434-8611	30	2
7X677	12551755	2815-01-430-2599	4	22
7X677	12553484		31	5
7X677	12553488	5330-01-476-3866	31	4
7X677	12554091	2930-01-460-7507	30	18
7X677	12554835	4710-01-446-9570	11	1
72582	12556342	2815-01-475-0825	4	9
7X677	12557708	5340-01-472-8851	4	18
7X677	12560223	5330-01-472-8179	9	4
45152	126488A	5999-01-150-8808	86	7
93334	127951	4730-00-012-7951	143	18
			151	18
34281	12821501	2530-01-462-8079	157	22
			158	12
34281	12821801	2530-01-462-8068	158	12
34281	12835400		157	16
			158	11
06178	1295	4730-00-266-0538	366	14
14892	129599	5310-01-173-0941	163	5
19728	13X-5549		45	5
06968	1301	5330-01-202-8360	273	20
			BULK	83
			BULK	85
18876	13048915-1	5342-01-104-7700	245	15
62607	1309	6240-00-060-4707	65	10
			65	25

CROSS-REFERENCE INDEXES

PART NUMBER INDEX

CAGEC	PART NUMBER	STOCK NUMBER	FIG.	ITEM
21450	131245	5310-00-013-1245	411	10
12204	131482	5310-00-013-1482	215	10
70412	13194	2540-01-212-4959	327	2
97403	13219E0079	5510-00-270-6031	BULK	89
80132	13414-077	8145-00-485-8250	126	3
11862	134530	5310-01-186-7702	79	15
18876	13480720		282	8
18876	13493198	6150-01-457-2964	282	9
18876	13495871	6150-01-452-3557	282	1
18876	13495916	5340-01-467-2127	282	11
70082	1351	2540-01-410-8794	329	3
			461	3
62161	1351BAC10SL		505	9
24617	135927	5320-01-461-7924	273	11
27647	13698	9905-01-185-3207	358	3
24617	137195	5315-00-012-0123	170	1
21450	137197	5340-01-214-3615	333	6
24617	137397	4730-00-014-2432	10	13
76760	13766	2520-01-174-9554	128	18
			129	34
24617	138242	5305-00-366-3337	34	1
27647	13826	3120-01-306-3577	314	31
27647	13839	3020-01-209-4603	314	4
27647	13848	5330-01-211-0717	314	3
24617	138482	5310-01-462-2175	232	3
27647	13850	5305-01-211-3101	314	1
24617	138538	5310-00-167-0721	178	13
27647	13874	3020-01-209-4606	314	5
76760	13877	5325-01-358-7961	130	42
76760	13903	5306-01-167-4346	128	64
76760	13955	5325-01-358-7962	130	34
35510	13981	5305-01-272-9025	39	47
68505	14-273	2920-01-248-2509	43	5
96881	14L14-F	2530-00-753-7285	169	21
06349	14L15-1-1XX	5340-01-195-8057	315	2
62826	1400164	5340-01-424-1300	138	2
			145	2
62826	1400165	5340-01-421-1423	138	4
62826	1400166		138	15
		5340-01-421-1415	145	15
62826	1400270		139	2
			146	2
62826	1400271		139	4
			146	4
7X677	14022649	5330-01-156-5147	4	7
7X677	14022650	5342-01-160-4397	4	5
7X677	14022683	5330-01-150-7744	4	28
7X677	14022699	3040-01-163-7208	4	8
7X677	14022700	4730-01-150-0879	6	6
7X677	14024229	5307-01-178-7445	31	10
7X677	14028918	2930-01-147-4198	30	3

CROSS-REFERENCE INDEXES

PART NUMBER INDEX

CAGEC	PART NUMBER	STOCK NUMBER	FIG.	ITEM
7X677	14028942	5325-01-151-6117	4	3
06968	1403	5330-01-213-1312	BULK	60
			BULK	87
			BULK	88
7X677	14033824	5340-01-159-6626	11	24
			11	24
7X677	14033893	5340-01-151-9956	11	4
7X677	14033895	5340-01-151-9957	11	32
7X677	14033896	5340-01-148-8349	10	4
7X677	14033911	4710-01-149-5075	11	30
7X677	14033912	4710-01-148-9580	11	11
7X677	14033913	4710-01-148-9581	11	28
7X677	14033914	4710-01-149-5076	11	12
7X677	14033915	4710-01-153-1636	11	18
7X677	14033916	4710-01-150-0971	11	16
7X677	14033917	4710-01-149-5077	11	23
7X677	14033918	4710-01-148-9582	11	17
7X677	14033921	5340-01-150-4106	11	19
7X677	14033922	5340-01-150-6275	11	20
7X677	14033946	5307-01-150-1227	8	2
			30	5
7X677	14033953	5340-01-150-7774	11	29
7X677	14033955	5340-01-150-6026	11	15
7X677	14037948	5315-01-160-4642	128	10
			130	23
7X677	14037958	5330-01-159-2811	128	52
			129	25
7X677	14037981	5325-01-157-6764	128	25
			128	47
			130	41
7X677	14044937	3120-01-155-3509	128	42
7X677	14045263	5307-01-150-1549	31	13
7X677	14050425	5315-01-151-4180	9	5
7X677	14050444	4730-01-164-7028	8	8
7X677	14060130	5305-01-243-3759	476	17
7X677	14061569	4710-01-148-2659	11	1
11862	14063339		10	12
7X677	14063340	5340-01-167-7794	10	8
7X677	14066301	5342-01-166-1534	11	21
7X677	14066305	4720-01-184-0432	BULK	94
11862	14066305-11		11	10
11862	14066305-7		11	22
7X677	14066307	5307-01-150-5992	365	17
7X677	14071059	2590-01-147-4285	4	2
7X677	14077122	6620-01-146-8006	30	1
7X677	14079550	5330-00-107-3925	104	11
7X677	14095677	3120-01-155-4470	128	40
7X677	14095678	3120-01-152-2613	128	73
7X677	14098631	4710-01-412-1668	11	30
7X677	14098632	4710-01-412-8611	11	11
7X677	14098633	4710-01-412-8615	11	28

CROSS-REFERENCE INDEXES

PART NUMBER INDEX

CAGEC	PART NUMBER	STOCK NUMBER	FIG.	ITEM
7X677	14098634	4710-01-412-1669	11	12
7X677	14098635	4710-01-411-8488	11	18
7X677	14098636	4710-01-411-8489	11	16
7X677	14098637	4710-01-412-1667	11	23
34623	14098638	4710-01-411-8492	11	17
27647	14401	2590-01-185-7949	314	6
72452	1459-254	5310-00-171-1734	39	25
7X677	147500		119	7
27647	14916	3020-01-446-4387	458	12
24617	1494255		205	17
27647	14964	5330-01-306-7887	458	23
27647	15271	3120-01-435-2560	458	30
79470	1537	4730-01-004-8346	141	20
70040	1538769	5330-00-700-6868	9	2
10138	15406-022	5305-00-054-5650	282	14
92867	15480200	2590-01-212-4955	153	15
92867	15541800	2590-01-265-3185	155	3
92867	15541802	2590-01-323-5153	155	9
76760	15556	2520-01-358-8883	132	22
76760	15574	5330-01-359-1292	130	35
27647	15597	3040-01-185-3201	314	8
27647	15598	5365-01-216-1166	314	10
27647	15603	5305-01-309-1521	458	1
27647	15604	5355-01-211-6991	314	37
			458	6
27647	15605	5330-01-445-5285	458	4
81343	15618240		BULK	66
76760	15624	5365-01-358-4642	132	24
7X677	15633464		8	6
7X677	15633485		31	3
27647	15634	5360-01-211-3163	314	39
27647	15643	3010-01-444-4018	458	11
27647	15647	3010-01-306-4113	458	24
24617	156471	5305-01-477-2824	225	38
27647	15654	3020-01-185-7948	314	7
27647	15655	2590-01-185-3116	314	24
27647	15657	7690-01-185-3208	358	1
27647	15663	2590-01-185-7947	314	30
27647	15664	2590-01-330-6102	314	13
27647	15665	6105-01-185-3187	314	27
27647	15667		314	15
27647	15668	5330-01-216-0288	314	11
24617	15670396	4730-01-456-5446	366	9
7X677	1567442	5310-01-021-9027	167	10
27647	15686	5365-01-306-9955	458	9
24617	156966	5305-01-410-8386	210	16
			269	9
7X677	156971	5305-01-198-1621	272	14
24617	157125	5305-01-381-2305	231	2
76760	15715	5331-01-358-9545	129	28
7X677	157166	5305-01-185-0114	213	24

CROSS-REFERENCE INDEXES

PART NUMBER INDEX

CAGEC	PART NUMBER	STOCK NUMBER	FIG.	ITEM
7X677	157166	5305-01-185-0114	225	15
			226	9
			234	14
			246	6
			254	16
			260	20
			260	25
			287	7
			321	22
			326	5
76760	15720	3120-01-360-0977	130	36
79470	1582	4730-01-200-4277	141	9
			399	20
27647	15847		313	13
27647	15848		313	16
27647	15849	2590-01-192-3021	314	22
27647	15873	9905-01-185-3127	358	2
76760	15896	5330-01-415-9613	130	30
24617	159612	5305-01-359-0167	74	8
24617	159658		276	5
76599	16HSS	4730-00-586-8463	27	8
7X677	160046	5305-01-208-0274	325	10
24617	160052	5305-01-407-7713	318	9
			485	23
			487	2
7X677	160057	5305-01-185-8647	199	4
			225	19
			232	4
			462	9
24617	160069	5305-01-467-2711	486	1
27647	16013	2590-01-329-9910	314	2
27647	16014	3020-01-210-1365	314	33
76760	16064	3040-01-206-3876	128	15
		5305-01-211-3100	314	14
76760	16081	5330-01-358-9533	130	31
76760	16104	5330-01-358-9540	130	30
79470	1611X3	4730-01-153-1871	345	40
			348	32
76760	16167	3120-01-359-6760	129	6
76760	16188		129	4
16764	16196390	5940-01-430-2764	50	6
16764	16197350	5962-01-430-0182	50	4
76760	16214	5330-01-358-9541	130	11
76760	16218	4720-01-358-6100	130	13
76760	16221	3040-01-360-4448	130	29
76760	16223		130	32
16764	16229203	5962-01-430-0208	50	4
76760	16243	5325-01-358-5450	129	5
76760	16244	2520-01-358-8880	129	2
16764	16251210	5962-01-440-0368	50	4
16764	16266408	5962-01-470-4619	50	4

CROSS-REFERENCE INDEXES

PART NUMBER INDEX

CAGEC	PART NUMBER	STOCK NUMBER	FIG.	ITEM
76760	16275	3040-01-358-8691	130	44
76760	16276	3020-01-358-8659	130	33
76760	16286	5310-01-358-7975	130	7
76760	16290	3020-01-358-8661	130	8
76760	16297	5365-01-358-4641	130	17
76760	16310	2590-01-358-7643	132	18
7X677	1635490	5306-01-149-6280	4	4
			8	5
			30	16
			30	16
19220	16386(75)	5340-01-197-2736	269	18
76760	16397	5325-01-358-7958	129	10
76760	16433	3020-01-358-8657	130	15
76760	16447	5340-01-358-7940	132	29
76760	16449	3040-01-358-8596	132	17
76760	16456	5310-01-358-7978	132	25
76760	16457	3120-01-359-6764	132	27
27647	16464	4030-01-210-0691	314	16
76760	16466	5325-01-358-7959	129	17
76760	16467	5310-01-358-5461	129	16
76760	16472	2520-01-358-8701	132	13
76760	16473		132	16
76760	16474	2590-01-358-7644	132	19
7X677	164830	5305-01-255-3588	331	8
			332	43
76760	16538		129	14
76760	16550	3040-01-359-1117	129	19
27647	16554	3040-01-209-3376	314	28
76760	16651	2520-01-358-8878	130	3
76760	16662	3020-01-359-1211	129	18
76760	16686	4320-01-358-8608	130	40
7X677	167038	5305-01-250-6584	55	4
			56	2
24617	167163	5305-01-211-3786	95	34
59150	1675-182	4730-01-189-4600	489	2
76760	16754	5340-01-358-8000	129	30
76760	16756	5305-01-359-4586	129	27
3M915	17C836R	5306-01-360-0926	438	4
57733	170677	5305-00-456-2582	345	8
			348	6
			348	15
76760	17071	5360-01-358-6563	129	29
7X677	172482	5305-01-236-4349	123	2
			124	14
			125	14
76760	17292	3040-01-359-1116	129	8
24617	173397	5305-01-411-4456	261	15
76760	17378	2520-01-358-7698	131	5
76760	17381	3040-01-358-8690	129	13
76760	17387	3040-01-358-8708	129	24
24617	174697	5306-00-425-8569	69	40

CROSS-REFERENCE INDEXES

PART NUMBER INDEX

CAGEC	PART NUMBER	STOCK NUMBER	FIG.	ITEM
76760	17475	3120-01-417-8178	130	31
76760	17510	4710-01-358-8410	130	12
59150	1755-724		489	3
80064	1755683	5935-00-605-9322	85	11
			86	16
76760	17560	2520-01-358-8881	129	9
76760	17562		132	23
76760	17564	5360-01-358-5420	132	28
76760	17565	3040-01-358-8692	130	18
76760	17566	3020-01-359-1136	130	6
76760	17567	3110-01-359-6669	130	5
76760	17568	5310-01-358-7974	130	4
76760	17570	3020-01-358-8656	130	9
76760	17571	3020-01-359-2529	130	47
76760	17573	2520-01-358-8658	130	10
76760	17575	3020-01-358-8662	130	16
76760	17577	3020-01-358-8601	130	48
76760	17578		130	39
76760	17584	3040-01-359-1119	130	20
76760	17585	3040-01-359-1118	130	37
76760	17586	2520-01-358-8700	132	20
76760	17588	2520-01-358-8879	130	1
76760	17718	3110-01-413-8094	129	6
59150	1775-826	4720-01-188-3190	BULK	21
			BULK	28
76760	17844	5305-01-416-1269	130	27
7X677	178654	4730-00-287-1706	159	6
			160	20
			161	14
			162	22
76760	17869	3010-01-412-0673	129	19
10001	1788116	5310-00-498-6675	395	9
7X677	179148	5340-01-189-7640	161	2
			162	2
24617	179802	5306-01-150-8713	118	10
73183	179818	5305-01-122-0253	121	16
29372	18L01-1X1AA	5340-01-206-5040	240	21
			243	22
71286	18L13-1-AD	5340-01-255-9380	240	3
71286	18L13-1-1AA	5340-01-190-0815	244	19
51387	180021	5305-01-211-1405	198	13
29510	180022	5306-01-371-4685	198	15
24617	180024		198	7
27647	18136	3950-01-329-9890	314	29
27647	18138	3040-01-185-8011	314	9
27646	1833	5360-01-420-0480	458	8
27647	1834	3110-01-444-4020	458	7
21877	1851863-4	5310-01-117-3446	243	15
27647	18545		314	12
24455	1864	6240-00-765-8443	47	2
72582	186676	5305-01-016-5469	71	12

CROSS-REFERENCE INDEXES

PART NUMBER INDEX

CAGEC	PART NUMBER	STOCK NUMBER	FIG.	ITEM
72582	186678	5305-00-989-0830	292	8
			293	19
35510	1869	5315-01-265-8771	39	23
7X677	186965	5305-01-264-5864	46	7
24617	187838	5305-00-018-7838	88	44
			254	7
			254	10
			487	8
19728	19X-3437		45	78
19728	19X-4632		45	65
24617	190139	5310-00-088-0553	392	4
76760	19016	5330-01-413-3713	129	31
72582	190171	5310-00-774-9073	390	4
24617	190254	5310-00-208-1918	88	4
			203	29
			272	4
			286	26
24617	190652	4730-01-269-9530	336	1
50022	19111	2930-01-168-7911	5	2
76760	19134		130	32
76760	19140	2520-01-413-1904	130	29
13899	191410	4730-00-529-1237	384	3
72582	192481	5310-01-058-3353	382	10
7X677	193620	5320-01-218-0721	31	6
02697	2-011N674-70	5331-00-580-6586	177	8
			178	4
02697	2-015C557-70	5331-01-166-1712	493	3
02697	2-016 N674-7	5331-00-984-3750	314	35
02697	2-113N497-70	5330-01-184-6492	103	10
			400	6
95019	2-2-1209	2520-01-249-1506	137	18
95019	2-3-10021X		136	19
95019	2-3-10831X		137	20
95019	2-3-11491KX		136	19
95019	2-3-11781X	2520-01-386-3384	137	20
95019	2-3-7961KX	2520-01-189-0594	137	9
95019	2-3-7961X		137	10
19220	2-300-P5	5360-01-282-9316	280	23
			281	23
72447	2-4-6851-1	2520-01-267-7371	148	11
95019	2-5-668X		136	8
			136	21
95019	2-5-848X		137	7
			137	22
95019	2-6-1318X		136	7
			136	20
95019	2-6-288X		137	6
			137	21
95019	2-60-607		136	24
95019	2-60-899-1528		137	13
95019	2-60-996-1524		136	11

CROSS-REFERENCE INDEXES

PART NUMBER INDEX

CAGEC	PART NUMBER	STOCK NUMBER	FIG.	ITEM
95019	2-70-59	5340-01-190-0807	136	1
			137	14
11083	2D1959	6240-00-019-3093	60	6
			61	6
0AKY3	20-8021	3030-01-466-9476	32	3
29372	20L01-1-1AF	5340-01-197-1294	220	2
			230	20
			231	25
			235	16
71286	20L02-1-1AA	5340-01-087-4612	230	23
			231	28
			235	19
19728	20X-4061		43	60
19728	20X-4063		43	58
19728	20X-4222		43	56
			45	14
68505	20X-4383	5305-01-429-9137	43	26
64648	2003-0015-3	5305-00-059-3659	407	22
24234	200335	5305-01-270-5419	342	2
			496	26
			498	7
24234	201685	5305-01-278-7118	494	17
24234	201686	5305-01-296-7762	343	6
			494	1
7X677	20197272		BULK	4
01276	2023-6-10S	4730-00-728-2393	6	10
24234	202751	5310-00-274-8710	343	5
			497	2
			498	11
24234	202755	5310-01-270-2661	494	2
			495	13
			496	8
0DPV2	203400	2540-01-385-9000	327	33
0DPV2	203500	2540-01-385-9031	327	39
0DPV2	203600	2540-01-386-8790	327	34
24234	204434	3120-01-270-2646	496	4
24234	204531		496	29
7X677	2065616	5310-01-187-3485	193	2
20768	207-180201-0101	5340-01-264-6104	197	5
52854	207-320401-00	5340-01-185-4959	225	5
			226	40
62826	2080007		138	14
		5365-01-421-8382	145	14
62826	2080021		138	13
			145	13
62826	2090003		139	6
			146	6
62826	2090004		139	5
			146	5
72962	21NE-040	5310-01-066-6759	19	18
			233	4

CROSS-REFERENCE INDEXES

PART NUMBER INDEX

CAGEC	PART NUMBER	STOCK NUMBER	FIG.	ITEM
72962	21NE-040	5310-01-066-6759	233	4
			266	16
			389	12
27647	21009	3040-01-307-6157	458	3
41024	21022013-150IN.		320	7
41024	21022103	5330-01-321-8622	BULK	59
			BULK	79
			BULK	81
41024	21022103-150		324	14
			324	36
41024	21022103-150IN.		316	12
			320	28
76760	21063	3040-01-452-9065	129	8
76760	21065	3040-01-413-4022	130	15
76760	21068	2520-01-413-1899	129	13
95019	211121X	5340-01-188-1017	136	17
			137	11
95019	211415X	3130-01-203-9870	136	12
23862	2136455	5306-00-207-2221	64	4
			83	34
27647	21451	4010-01-231-5075	314	17
76760	21727	5330-01-415-9612	130	20
27647	21781	4030-01-209-7047	314	20
62826	2180007		138	12
			145	12
27647	21880	3040-01-209-3409	314	36
76760	21909	3040-01-420-1887	130	18
70411	220C-J	4820-01-192-8030	399	2
10988	222-652	4730-01-193-7390	345	12
			348	17
0GE52	2227346	5340-01-456-2751	163	9
0GE52	2227677	5340-01-458-6386	163	8
0GE52	2228633	2530-01-459-5890	163	10
73370	2229379	5330-01-293-5345	163	4
73370	2230648	5340-01-293-5558	163	2
14894	2232134	2530-01-179-7589	163	1
73370	2232146		163	3
27647	22350	3110-01-444-4100	458	13
24617	223533		188	39
76760	22398	5365-01-446-9408	128	22
			130	25
7Z043	224N2V14		41	3
7X677	22511422	5340-01-148-7528	10	5
15946	22515630	5307-01-150-9538	11	7
			12	17
7X677	22521550	5310-01-165-3331	4	30
			11	26
91816	2269B-2MM-.5	4820-01-430-4132	14	14
91816	2269B-2MM-3	4820-01-173-6883	14	28
62826	2290033		139	7
			146	7

CROSS-REFERENCE INDEXES

PART NUMBER INDEX

CAGEC	PART NUMBER	STOCK NUMBER	FIG.	ITEM
35510	2295	5305-01-078-8929	406	35
81834	23-0118-27	5305-01-218-1243	64	10
80813	230-7/16-14	5355-01-196-2770	133	1
72582	23011420	5365-01-188-0782	4	23
			104	12
73342	23015732	2520-01-170-9826	111	12
73342	23015880		111	3
73342	23017556	5315-01-152-9029	100	15
73342	23017763	2520-00-008-9987	109	2
06032	2310-0143-001	5310-01-121-1703	2	9
			174	6
			184	2
			285	7
			437	7
			438	3
			453	11
			456	4
06032	2310-0422-001	5310-01-062-6864	79	14
95019	231401	5306-01-190-5760	136	2
			136	2
			137	15
76700	23244A	2990-01-188-3281	23	7
35510	23304	5305-01-272-8302	39	78
7X677	23500006	5307-01-187-0519	4	17
7X677	23500008	2910-01-189-8851	4	11
7X677	23500012	2930-01-188-3682	30	18
72825	23500024		10	11
7X677	23500032	5307-01-207-9004	31	9
7X677	23500035	2815-01-168-7909	8	7
11862	23500084		30	14
7X677	23500085		31	5
7X677	23500832	5307-01-150-5991	8	3
			8	3
72582	23502073	2815-01-168-7871	4	9
7X677	23502587	5330-01-378-8572	4	32
7X677	23503124	5325-01-160-4618	11	13
72582	23521131	5310-01-250-7679	4	20
62826	2390036		139	10
			146	10
62826	2390074		139	12
62826	2390076		139	11
			146	11
62826	2390077	2530-01-459-9492	KITS	110
62826	2390079		146	12
28520	2400	5325-01-289-7859	74	5
			91	13
			493	6
7X677	24200128		115	2
7X677	24200130	3010-01-460-8309	115	14
7X677	24200173	3040-01-447-7995	108	2
7X677	24200224	4730-01-460-5520	108	12

CROSS-REFERENCE INDEXES

PART NUMBER INDEX

CAGEC	PART NUMBER	STOCK NUMBER	FIG.	ITEM
7X677	24200347	4710-01-460-8316	105	6
			105	6
			105	7
			108	14
7X677	24200418	4820-01-474-8911	KITS	
7X677	24200436	5360-01-476-2692	120	7
7X677	24200695	5930-01-456-7880	120	13
7X677	24200732	2520-01-481-7690	120	9
7X677	24200999		108	6
7X677	24201001		108	5
7X677	24201115	5330-01-456-2744	120	10
7X677	24201116	2520-01-456-6256	120	20
7X677	24201381		120	12
7X677	24201386		119	2
7X677	24201388	5330-01-456-7886	119	5
7X677	24201389		119	8
11862	24201390		119	6
7X677	24202092	2520-01-456-5014	115	6
7X677	24202111	5330-01-410-7229	KITS	
7X677	24202229	3040-01-480-7593	107	16
7X677	24202282	5340-01-456-2741	117	19
72590	24202329	2520-01-399-4691	105	1
7X677	24202346		107	9
7X677	24202357	5331-01-480-0748	115	26
7X677	24202358		115	22
7X677	24202359		112	5
7X677	24202360	5330-01-478-5994	114	13
7X677	24202361	5330-01-478-3900	114	14
7X677	24202552	2520-01-474-8868	114	12
7X677	24202577	5315-01-456-2737	117	7
7X677	24202578	5315-01-456-2739	117	7
7X677	24202579	5315-01-456-6254	117	7
7X677	24202580	5315-01-456-2738	117	7
7X677	24202581	5315-01-456-2740	117	7
7X677	24202582	5315-01-456-7882	117	7
7X677	24202583	5315-01-456-2743	117	7
7X677	24202611	5360-01-461-4931	108	9
7X677	24202631	3040-01-480-7595	110	15
7X677	24202646	2520-01-150-3932	109	3
			110	3
			111	16
			112	16
7X677	24202681		122	17
7X677	24202928		117	13
7X677	24202943	2520-01-459-8532	120	12
7X677	24202957		119	2
7X677	24202959		119	21
7X677	24202966	2520-01-456-7883	114	8
7X677	24202976	2520-01-460-4961	114	11
7X677	24202985	3040-01-456-7881	117	16
7X677	24203366		105	2

CROSS-REFERENCE INDEXES

PART NUMBER INDEX

CAGEC	PART NUMBER	STOCK NUMBER	FIG.	ITEM
7X677	24203377		105	18
7X677	24203397	3020-01-480-7299	107	8
7X677	24203398	3020-01-480-7630	107	17
7X677	24203399	3020-01-480-7321	107	17
7X677	24203400	3040-01-480-7309	107	13
7X677	24203499		112	3
61928	24203876	2990-01-399-1023	105	9
7X677	24204253	5330-01-478-5993	120	10
7X677	24204262		120	12
7X677	24204266		119	2
7X677	24204268	5330-01-473-8584	120	8
7X677	24204270	2520-01-475-9665	120	9
7X677	24204275	4710-01-477-9032	120	15
7X677	24204276		120	17
7X677	24204278		KITS	
7X677	24204280		105	21
7X677	24204291	3040-01-480-7591	107	22
7X677	24204303	2520-01-465-8809	122	9
7X677	24204441	5330-01-398-3724	KITS	
7X677	24204497	2520-01-456-2736	114	6
7X677	24204835	2520-01-460-8323	102	1
7X677	24204957		112	7
7X677	24204962		107	10
7X677	24205103	5340-01-474-4011	105	4
			125	22
72590	24205114	2520-01-430-2765	105	1
7X677	24205123	5330-01-480-2502	105	20
72950	24205225		105	1
24617	24205251	5330-01-442-2874	KITS	96
7X677	24205348	2520-01-460-8301	KITS	
7X677	24205373	5935-01-150-6319	100	4
7X677	24205398		122	9
7X677	24205551	2520-01-149-7861	106	11
			KITS	
7X677	24205552	2520-01-474-7051	KITS	
7X677	24205560	2520-01-481-8479	112	17
7X677	24205722	5330-01-480-0750	114	15
7X677	24205778		122	5
7X677	24205786		122	7
7X677	24205833	5331-01-477-6762	122	32
7X677	24206024		120	24
7X677	24206025		120	23
7X677	24206749	5340-01-408-8525	KITS	32
7X677	24207168		105	2
7X677	24207180		114	17
7X677	24207247	3040-01-480-7297	107	7
7X677	24207501		112	4
72590	24208605		105	1
7X677	24208848		KITS	
7X677	24208849	2520-01-481-8460	KITS	
7X677	24208850		112	2

CROSS-REFERENCE INDEXES

PART NUMBER INDEX

CAGEC	PART NUMBER	STOCK NUMBER	FIG.	ITEM
7X677	24208852	4320-01-398-2069	122	3
24617	24209225		110	5
7X677	24209244		110	13
7X677	24209276	5945-01-478-7862	119	24
7X677	24209311	2520-01-411-2749	110	12
7X677	24209475	3020-01-480-7302	107	8
7X677	24210468		105	15
7X677	24210954	3010-01-480-7597	KITS	
7X677	24210955	5330-01-480-0752	KITS	
7X677	24210956		KITS	
7X677	24212051		107	9
24234	243046	6150-01-276-7698	54	4
24234	243047	2590-01-276-5071	54	3
24234	243048	2990-01-406-8738	54	5
16004	24338	9905-00-205-2795	211	17
35510	2434	5310-00-775-5139	39	37
24617	2436161	5310-01-102-3270	13	17
			14	24
			15	2
			16	2
			17	8
			27	12
			29	4
			43	47
			46	24
			97	3
			99	7
			124	11
			125	11
			153	2
			155	13
			169	28
			198	21
			202	25
			203	6
			204	2
			233	5
			233	5
			241	4
			243	14
			244	8
			245	10
			245	17
			245	33
			246	17
			247	2
			247	14
			248	6
			249	11
			249	26
			249	35

CROSS-REFERENCE INDEXES

PART NUMBER INDEX

CAGEC	PART NUMBER	STOCK NUMBER	FIG.	ITEM
24617	2436161	5310-01-102-3270	250	6
			251	2
			254	2
			254	20
			255	2
			267	14
			269	12
			269	27
			270	2
			270	2
			271	8
			272	9
			274	4
			274	9
			275	4
			276	2
			276	30
			277	22
			285	2
			286	38
			331	10
			332	3
			333	8
			398	17
			399	14
			400	12
			409	10
			411	2
			411	9
			413	4
			415	16
			430	23
			430	37
			453	9
			484	7
			486	6
24617	2436162	5310-01-119-1024	83	24
			169	32
			209	9
			225	3
			231	8
			231	15
			234	5
			234	5
			338	26
			374	8
			439	2
			463	11
24617	2436163	5310-01-412-4013	23	21
			30	4
			35	4

CROSS-REFERENCE INDEXES

PART NUMBER INDEX

CAGEC	PART NUMBER	STOCK NUMBER	FIG.	ITEM
24617	2436163	5310-01-412-4013	36	14
			38	14
			144	5
			152	5
			152	15
			270	20
			278	10
			283	7
			341	7
			409	7
			410	5
			411	13
			412	5
			414	3
			415	12
			416	4
			425	15
			426	13
			427	14
			428	4
			456	19
			462	3
			463	2
			463	2
			464	2
			476	3
24617	2436164	5310-01-148-2681	144	15
24617	2436165	5310-01-121-1703	26	11
			184	2
			185	6
			186	2
			187	12
			188	23
			242	7
			271	17
			271	29
			315	6
			408	18
24617	2436167	5310-01-151-7347	140	7
			147	7
			170	20
			185	4
			187	3
			195	11
			196	2
			457	19
			470	11
23862	2436168	5310-01-147-4052	144	2
			152	2
			166	2
			183	7

CROSS-REFERENCE INDEXES

PART NUMBER INDEX

CAGEC	PART NUMBER	STOCK NUMBER	FIG.	ITEM
24617	2436168	5310-01-147-4052	188	17
			188	29
			470	10
27647	24563	3010-01-444-4019	458	14
20969	246X5X4	4730-00-277-6347	366	24
72983	248X4	4730-00-900-3296	178	15
27647	24800	6110-01-434-5562	458	36
27647	24832	3020-01-444-1359	458	10
19220	249	5340-01-209-4870	280	11
			281	11
7X677	25042462	2990-01-147-9284	7	3
70040	25043364	4820-01-192-7678	399	18
80463	25055210	4730-01-189-8854	15	12
			16	11
61928	251-591	2930-01-353-5794	31	3
86403	2538571	5325-01-267-1107	488	22
16236	2540V0751	2540-01-314-9378	230	2
			235	2
7X677	2551880	4730-00-871-6729	10	9
80138	256A		56	3
53711	2590174	2910-00-930-9367	366	25
99167	25932	5310-00-167-0834	279	27
7X677	26002516	5330-01-324-8260	172	19
52788	26049931		172	5
24234	260790	2930-01-282-2524	498	9
28527	2616950G001	5310-00-615-1556	407	24
35510	26351	5310-01-210-0819	39	55
24234	265330	4140-01-269-7101	494	18
27647	26781	2590-01-185-3115	314	32
28520	2683	5340-01-203-1980	197	18
			199	61
			227	8
24617	271153	5305-01-393-6311	160	22
			162	10
72582	271163	5310-01-069-5243	74	4
			282	16
			435	5
			453	7
24617	271168		92	16
			339	3
72582	271169	5310-00-124-9265	19	14
			77	7
			79	23
			84	8
			85	23
			88	9
			95	32
			207	6
			227	16
			231	22
			254	24

CROSS-REFERENCE INDEXES

PART NUMBER INDEX

CAGEC	PART NUMBER	STOCK NUMBER	FIG.	ITEM
72582	271169	5310-00-124-9265	260	22
			282	4
			318	7
			321	21
			323	16
			325	20
			327	43
			400	10
			410	26
			414	13
			416	17
			462	16
			468	12
			477	6
			485	13
			488	9
			488	11
24617	271172	5310-01-152-0598	51	4
			69	34
			77	13
			83	15
			83	31
			83	31
			88	17
			88	29
			95	40
			155	6
			304	7
			313	11
			320	18
			320	31
			378	19
			408	34
			410	33
			412	14
			453	3
			457	13
			480	23
24617	271175	5310-01-333-5245	62	29
			379	50
			485	27
24617	271184	5310-00-933-4310	282	7
			403	3
			433	2
			435	3
93061	272NTA-8-6	4730-01-119-6895	15	21
			16	16
28520	2723	5340-01-273-2380	59	21
7X677	272474	5310-01-204-1039	73	4
			434	2
			435	2

CROSS-REFERENCE INDEXES

PART NUMBER INDEX

CAGEC	PART NUMBER	STOCK NUMBER	FIG.	ITEM
24617	272739	5310-01-317-8164	395	8
7X677	274233	5305-01-211-6049	49	3
11862	274244	5331-00-935-9136	3	3
			400	2
			479	3
73342	274267	2010-00-937-5599	122	26
24234	274278	6105-01-265-8634	494	19
			498	14
11862	274612	5365-01-196-5636	245	4
73342	274613	5325-00-349-8518	121	15
7X677	274707	5305-01-187-8757	46	9
			331	13
			332	27
27647	27569	4010-01-426-4536	458	39
70485	2758	5325-00-249-6345	333	33
14892	2771302	2530-01-179-7590	164	1
93061	279NTA-8-6	4730-01-091-2809	15	13
			16	12
62826	2790024		139	9
62826	2790026		139	9
62826	2790028		146	9
62826	287-0006	2530-01-191-8741	KITS	470
28520	2874	5325-01-289-5038	92	19
35510	2879	5305-01-272-9024	39	36
62826	2880015		138	3
			145	3
62826	2880016		138	10
			145	10
62826	2880019	2530-01-394-6168	139	10
			KITS	350
62826	2890019		139	3
			146	3
86403	2892399	6680-00-269-0335	488	23
81834	29-1063-02	6220-01-216-9337	64	6
24234	290081		55	14
24234	290101	5340-01-282-0469	498	2
24234	290227	4730-00-230-2959	496	25
24234	290249	5340-01-276-6738	496	18
24234	290308	5340-01-296-1736	494	6
24234	290309	5340-01-289-7793	494	16
41387	2938-2	5331-00-580-6586	470	3
27647	29519	4030-01-426-4537	458	41
73342	29520052	5310-01-143-0512	12	20
			23	22
73342	29530330	2520-00-172-1947	109	4
			110	4
			111	17
77060	2965718	5940-01-270-3701	93	4
77060	2973850	5940-01-270-3700	92	2
			93	6
			95	7

CROSS-REFERENCE INDEXES

PART NUMBER INDEX

CAGEC	PART NUMBER	STOCK NUMBER	FIG.	ITEM
77060	2973850	5940-01-270-3700	96	11
62826	2980300	2520-01-382-8874	138	1
62826	2980301	2520-01-382-8728	138	1
62826	2980302	2520-01-383-2387	145	1
77060	2984172	5940-01-270-3702	95	15
			96	4
77066	2984576	5940-01-289-5955	96	14
62826	2990054	2530-01-459-9493	KITS	190
62826	2990055	2530-01-459-9494	KITS	200
62826	2990056	2530-01-459-9495	KITS	210
73680	2994-2106	5330-01-180-9099	150	11
			151	11
73680	29960-0511	5330-01-358-9532	128	59
			129	31
1E045	3-10	5340-01-260-9942	217	2
73957	3-32X3-4LG	5315-00-828-5487	4	13
19220	3-400-L (25)	5340-01-198-5455	269	19
19220	3-400-R	5340-01-199-6103	269	19
85688	3R	5120-01-373-4980	507	1
12603	30H-18	5340-01-017-4630	13	3
			14	3
7Z588	30024H	4730-00-908-3193	379	39
			496	15
92878	30040-01	6105-00-512-9225	333	13
24234	300442	5331-01-160-9857	467	7
			493	1
			496	11
24234	300448	5331-01-061-3000	467	9
			493	7
			494	12
			496	16
24234	300506-72.0	5640-01-288-5547	493	5
24234	300515	4720-01-282-0143	496	22
60602	30071		21	8
60602	30073	5305-01-290-8206	21	10
51377	3018-01265-01	5331-01-192-8892	34	6
51377	3018-01339-01	5330-01-247-8438	34	7
92878	30250	2540-01-190-7079	333	11
27647	30260	3010-01-429-5333	458	29
92878	30266	6105-01-211-6635	333	12
27647	30274	3120-01-447-8658	458	21
			458	33
27647	30275	5330-01-446-4696	458	20
			458	32
27647	30277	3120-01-447-8663	458	18
51377	3029-01371-01	5310-01-194-0481	34	3
51377	3030-00364-01	5310-01-190-4607	34	14
27647	30326	5365-01-426-6643	458	26
27647	30328	5305-01-448-5080	458	22
7Z588	30448-D	5315-01-409-1662	488	25
51377	3051-01405-01	5307-01-190-5854	34	12

CROSS-REFERENCE INDEXES

PART NUMBER INDEX

CAGEC	PART NUMBER	STOCK NUMBER	FIG.	ITEM
51377	3058-01264-02	5310-01-189-8468	34	4
00303	308	6240-00-155-7790	65	16
81348	309-552-321		168	1
82465	31WLF3816	5310-00-355-5645	44	7
27647	31262	3040-01-446-3689	458	5
45152	31270AX75	4720-01-003-6706	BULK	25
27647	31293		458	44
27647	31585	5340-01-430-0037	458	43
27647	31597	5935-01-431-5656	458	37
27647	31604	5945-01-431-5195	458	38
27647	31625	5305-01-428-6635	458	46
24234	319032	4720-01-265-3238	343	12
27647	32062	3120-01-435-2495	458	34
06032	32100143001		183	10
92871	3212735	3040-01-244-3646	488	18
27647	32208	5365-01-434-0186	458	27
27647	32209	3040-01-446-3684	458	15
27647	32231	2590-01-446-5962	458	16
27647	32235	6105-01-434-1729	458	47
27647	32236	3950-01-435-1014	458	31
27647	32237	2590-01-446-5957	458	19
27647	32239	3020-01-446-3695	458	25
81495	330 2000	5310-00-087-7493	401	8
01347	330-10-10R	4820-01-005-2994	363	3
19220	34-4974-51X	5340-01-259-8600	269	24
79470	3400X2W	4730-00-639-9730	135	6
62226	34068-02	5355-01-481-5517	231	17
27647	34384	3040-01-444-1756	458	2
46156	34403-35-1	5315-01-188-4490	225	37
96152	346-786	4820-01-210-3488	15	4
			16	4
68505	35-762	2920-01-168-4127	43	54
02768	354-280308-00-00 78	5325-01-197-3460	153	22
			332	21
96867	3541	5340-01-197-6755	277	49
7X677	354501	4730-01-148-2758	30	17
			31	2
24234	354674	5330-01-282-2208	498	13
24234	354944	5330-01-282-2214	496	12
			498	1
60602	35745-44	2590-01-199-5423	21	15
60602	35752	2590-01-279-5714	21	6
60602	35752-12		21	11
24975	36-630	5330-01-190-7510	KITS	15
			KITS	150
76599	36HSS	4730-00-909-8627	17	14
			29	8
24234	360450	4730-01-282-5075	361	24
7X677	360582	5360-01-165-1563	4	16
98853	361130-EA02	5940-01-440-0097	93	14

CROSS-REFERENCE INDEXES

PART NUMBER INDEX

CAGEC	PART NUMBER	STOCK NUMBER	FIG.	ITEM
98853	361230-D	5940-01-436-4561	93	15
60602	36162-23	2590-01-466-4397	468	2
35510	36196	2920-00-653-9025	406	33
80020	36344N24		191	19
35510	36895	5310-00-045-3299	39	77
35510	36896	5310-01-162-9661	404	4
			406	31
35510	36900	5310-00-482-1999	406	30
35510	36912	5310-01-143-1679	39	76
27647	36974	5305-01-448-5074	458	17
94222	37-10-071-10	5340-00-492-2313	208	11
68505	37-123A	5330-01-190-7509	KITS	
19728	37X-4914		45	76
7X677	3702366	2805-00-336-1716	4	15
7X677	3704871	5340-01-194-5294	4	14
91094	371230-B01		75	22
7X677	3719599	2910-00-493-2138	9	3
7X677	3739798	4730-01-182-6565	30	15
			31	7
7X677	3787240	2520-01-159-7757	128	80
			129	38
7X677	3790768	5310-01-147-8743	490	5
19220	38-5611-UL	5340-01-259-7601	269	5
7X677	3816659	5340-01-149-4434	399	8
73342	3829139	5306-00-024-6580	104	8
7X677	3895411		9	7
81349	39TB10F	5940-00-983-6105	52	17
39428	3933T22	5340-01-125-1682	353	7
55787	393835	5307-01-140-6594	268	36
73342	3947086	5330-00-001-4904	111	4
81343	4-060110B	4730-00-011-4627	312	16
			348	16
81343	4-4 130139C	4730-01-347-7342	385	6
81343	4-4 130239C(CAD)	4730-01-209-0845	135	4
81343	4-4-4 130438B	4730-00-471-3102	366	13
81343	4-4-4 140438C	4730-01-048-9769	384	4
76301	4M116-04004	5310-01-204-3344	213	25
			214	20
98465	4M25-4	5310-00-817-4623	261	14
61864	400C0MM0NSENSETY PE	5325-00-281-8642	316	3
31272	40000-10	2540-01-271-8010	263	4
24234	400084	4130-01-265-8726	496	1
92871	4004616	5310-01-189-8485	165	8
25341	40210	5120-01-373-4979	507	1
51377	4026-38368-01	2930-01-189-8643	34	17
24234	403475	4720-01-265-3213	336	2
86403	4037634	2530-01-098-6827	KITS	37E
51377	4040-38442-01		34	8
24234	404179	5930-01-266-1809	494	8
24234	404180	5930-01-266-3917	496	30

CROSS-REFERENCE INDEXES

PART NUMBER INDEX

CAGEC	PART NUMBER	STOCK NUMBER	FIG.	ITEM
24234	404187	4820-01-265-3156	492	10
24234	404188	4820-01-265-3159	492	12
51377	4043-38443-01	2930-01-189-1744	34	5
24234	405475	4820-01-265-3149	494	7
			496	31
24234	405565	6680-01-265-8698	496	19
24234	405680	4710-01-265-3152	496	17
24234	405681	4710-01-285-5123	496	20
24234	405682	4710-01-265-3230	493	8
24234	405683	4710-01-265-3276	493	4
24234	405684	4710-01-265-3277	493	2
24234	405695	4720-01-282-0160	496	24
08627	406CD	5340-00-050-9077	141	24
24234	407234	2540-01-265-3266	343	21
51377	4073-38424-01		34	15
51377	4079-38441-01		34	18
51377	4088-35869-01	5360-01-190-6214	34	11
82386	410-63	5305-00-582-9501	37	8
			75	24
			77	5
			83	10
			84	4
			85	22
			88	7
			216	4
			327	45
			468	13
			488	6
			488	6
24234	410909	4130-01-300-6350	494	3
15434	410912	2540-01-291-1043	343	2
24234	410913	2540-01-265-3234	54	1
24234	410914 ITEM8		54	10
24234	410915	2510-01-276-5058	54	8
			55	1
24234	410917	4130-01-282-1895	496	2
24234	410918	5340-01-281-7795	496	5
24234	410920	4130-01-269-4921	496	27
24234	410921	2540-01-285-6066	498	4
24234	410922	2540-01-296-9358	343	13
24234	410925	4420-01-276-5050	495	15
25341	41102	6680-01-372-5748	506	3
41024	41256040	5340-01-256-9318	316	20
			320	17
			320	32
			324	29
95019	41292	5330-01-174-8146	148	7
82978	4167924	5310-01-174-8091	128	20
			129	36
0U276	41945	5342-01-246-1120	17	1
25341	42106		507	2

CROSS-REFERENCE INDEXES

PART NUMBER INDEX

CAGEC	PART NUMBER	STOCK NUMBER	FIG.	ITEM
25341	42107		508	3
25341	42109		506	2
86403	4210973	5310-01-186-5237	128	19
			128	63
25341	42113	5120-01-373-5984	508	4
25341	42124	5120-01-373-4985	508	2
06968	42130156-7		29	5
24617	423531	5305-00-403-5130	345	14
			348	5
			348	13
24617	425570	5306-00-042-5570	84	5
			88	46
21450	426686		375	2
			375	5
			378	2
			378	5
21450	426687		375	3
			375	6
			378	3
			378	6
7X677	427566	5306-00-844-0036	438	5
20796	43-5791	3030-00-379-2815	32	2
25341	43204		506	4
25341	43205	5120-01-373-4987	507	3
25341	43208	5120-01-373-4984	508	5
25341	43210		508	1
25341	43305		506	1
35510	4340	5310-00-429-3135	39	43
25341	43501		507	4
70655	4375	5342-01-289-7708	295	12
24161	4377	4720-00-139-3968	BULK	9
31272	43977-12	5340-01-271-4282	279	30
72582	442393	4730-01-457-0727	160	7
			161	7
			162	8
31272	44647-10	5340-01-203-5634	243	10
			270	38
31272	44647-11	5340-01-206-7780	241	1
31272	44647-12	5340-01-198-2255	246	10
			247	20
			248	11
			249	14
31272	44647-18	5340-01-265-8923	258	7
			259	3
			260	3
			262	11
31272	44647-19	5340-01-272-8431	259	8
			264	4
31272	44647-21	5340-01-272-2801	218	4
31272	44647-22	5340-01-272-3403	257	7
31272	44648-13	5340-01-203-6539	248	1

CROSS-REFERENCE INDEXES

PART NUMBER INDEX

CAGEC	PART NUMBER	STOCK NUMBER	FIG.	ITEM
31272	44648-14	5340-01-203-2707	248	8
31272	44648-15	5340-01-203-4646	247	27
31272	44648-17	5340-01-203-2708	247	28
31272	44648-19	5340-01-203-6538	249	28
31272	44648-20	5340-01-198-2254	249	24
31272	44648-21	5340-01-198-2257	249	45
31272	44648-22	5340-01-198-2256	249	43
31272	44648-24	5340-01-260-9940	286	13
31272	44648-25	5340-01-256-0942	430	11
31272	44648-26	5340-01-255-2812	430	9
35510	4465	5305-00-601-7729	39	7
			406	19
31272	44672-10	2590-01-185-4391	240	16
31272	44672-11	2590-01-185-4390	240	16
			429	26
31272	44702-10	5340-01-203-6542	319	6
			320	4
			322	5
			323	4
			324	5
			326	4
			375	7
87541	4485(US 27)	5340-01-278-8588	213	39
			214	32
7X677	448655	5305-01-206-8401	77	12
			88	12
			477	1
87541	4487(US26D)	5310-01-288-1257	213	34
			214	27
31272	44877	5340-01-199-3510	375	26
31272	44884	5340-01-197-6753	268	39
31272	44888	5340-01-199-4989	272	30
31272	44931-11	2590-01-256-3628	429	25
31272	44943	5340-01-198-3457	248	13
24617	449617	5305-01-478-3387	469	12
31272	44996-10	5340-01-266-3844	287	18
31272	45053-10	5340-01-199-1662	268	14
31272	45053-11	5340-01-198-2253	271	30
			274	16
31272	45057-10	5340-01-256-4656	272	18
31272	45065-10	5340-01-209-7761	250	3
31272	45079-10	2540-01-271-5071	263	1
31272	45084-11	5340-01-265-8925	256	5
			257	10
			289	1
31272	45084-12	5340-01-287-8761	260	15
31272	45085-11	5340-01-266-3846	287	9
31272	45087-10	5340-01-282-2670	265	4
			289	16
31272	45094-10	5340-01-272-3402	287	10
31272	45096-10	5340-01-198-5165	246	4

CROSS-REFERENCE INDEXES

PART NUMBER INDEX

CAGEC	PART NUMBER	STOCK NUMBER	FIG.	ITEM
31272	45096-11	5340-01-199-1663	246	3
31272	45096-13	5340-01-257-2644	430	10
31272	45160-10	5340-01-207-0610	241	2
24617	451786	5340-01-162-5883	108	10
31272	45187		250	1
31272	45188-10	4530-01-211-5328	250	4
31272	45189-10	2590-01-210-0176	250	2
31272	45243-10	5342-01-280-6264	288	25
31272	45262-11	5340-01-255-9918	280	2
			281	2
31272	45262-13	5340-01-253-8971	280	2
			281	2
24617	453006	5365-00-277-7341	142	5
			151	5
34623	45302-11	5340-01-259-3956	246	37
24617	453039	5305-01-459-9564	190	6
24617	45303916		463	17
31272	45307-10	5340-01-204-2543	272	36
7X677	453349	5305-01-215-3990	83	13
7X677	453571	3110-01-412-0490	115	3
24617	453719	5305-01-315-7066	239	2
			402	4
72582	454065	5305-01-143-2328	327	40
			477	8
			480	2
21450	454097	4730-00-911-5707	6	1
			177	3
31272	45410-10	5340-01-254-7191	253	37
			429	29
			430	19
31272	45410-11	5340-01-254-7190	251	14
31272	45410-12	5340-01-259-0328	252	21
			252	35
31272	45410-13	5340-01-258-4529	251	23
			255	18
31272	45410-14	5340-01-259-0329	253	9
			253	17
			255	16
31272	45410-16	5340-01-258-6158	252	40
			253	4
			255	7
			255	10
			260	23
31272	45410-18	5340-01-259-0330	254	9
			255	26
31272	45410-19	5340-01-275-8567	253	29
			279	31
31272	45410-20	5340-01-264-5833	234	13
			252	16
			253	38
31272	45410-21	5340-01-275-8568	256	1

CROSS-REFERENCE INDEXES

PART NUMBER INDEX

CAGEC	PART NUMBER	STOCK NUMBER	FIG.	ITEM
31272	45410-21	5340-01-275-8568	257	4
31272	45410-22	5340-01-272-7815	260	9
24617	454253	5340-01-038-1493	74	11
24617	454542	5305-00-499-7694	51	9
31272	45460-10	5340-01-253-8933	277	14
24617	454748	5310-01-038-9579	375	11
			375	14
72582	454749	5310-00-164-1790	377	7
31272	45481-01	2590-01-260-0214	279	6
31272	45481-10	2540-01-249-1584	279	1
24617	454870	5306-01-360-1637	439	1
7X677	454977	5306-01-192-2207	169	26
24617	455000	5306-01-360-1125	453	19
24617	455006	5306-01-360-1128	188	37
			453	12
31272	45502-10	5340-01-260-9026	429	24
31272	45503-10	5340-01-257-0908	429	20
31272	45602-10	2590-01-262-4981	279	7
31272	45602-11	2590-01-262-4980	279	4
31272	45606-10	5340-01-261-1564	251	41
31272	45606-11	5340-01-258-6157	246	12
			251	18
			251	32
			253	23
			255	32
31272	45606-12	5340-01-256-4655	254	15
31272	45607-10	5340-01-258-8609	252	31
31272	45608-10	2590-01-261-0523	279	22
31272	45610-10	5307-01-286-6007	279	24
31272	45611-10	5310-01-298-4686	279	5
31273	45613-10	5365-01-267-6769	279	13
31272	45615-10	5340-01-260-0218	279	21
31272	45616-11	2590-01-260-0217	279	20
31272	45617-13	3040-01-264-9554	279	8
31272	45618-10	5340-01-271-4281	279	25
31272	45619-11	2590-01-260-0216	279	15
31272	45621-10	5306-01-269-6254	279	9
31272	45623-10	4010-01-271-2598	279	16
7X677	456369	5315-01-196-0277	277	25
31272	45685-10	5340-01-299-2963	252	28
24617	456931		88	25
31272	45721-10	5342-01-260-0215	279	10
63829	4605-0470	5306-01-296-8600	491	22
13445	46211-03	5940-01-180-3655	69	5
81263	46827	5305-01-197-7547	68	12
51377	4735-38449-02	4140-01-211-8403	32	1
51377	4735-42599-103	2930-01-420-8622	32	4
57733	475005	5310-00-061-0004	345	25
			348	36
59150	4755-725	2940-01-176-1427	489	1
78385	476624	4730-00-701-7737	345	35

CROSS-REFERENCE INDEXES

PART NUMBER INDEX

CAGEC	PART NUMBER	STOCK NUMBER	FIG.	ITEM
78385	476624	4730-00-701-7737	348	33
7X677	477249	5330-01-154-7159	4	10
76599	4816SS-305	4730-01-088-7798	7	6
			333	3
78358	484487		393	13
78385	487283	5310-00-333-7341	345	24
			348	3
57733	487357	5305-00-576-2335	345	18
			348	12
78385	487370	5310-00-789-0398	349	15
78385	488558	5305-00-135-3032	348	7
57733	488755	5320-00-801-1548	348	11
78385	488993	5325-00-543-2902	345	38
			348	37
78385	489142	5305-00-018-8370	345	37
			348	27
80753	49RED	9905-00-977-2727	330	4
79470	49X4X4	4730-00-366-3011	178	18
79470	49X6X2	4730-00-254-6227	334	7
60602	49005-1224	5340-01-290-8360	21	9
45152	4965	9320-01-155-2369	BULK	64
81343	5 010112B(N5)	4730-00-260-8285	366	15
81337	5-11-966-41	5310-00-087-7493	206	21
72447	5-153X	2520-00-722-7074	KITS	13
81361	5-19-2300	4240-01-365-0982	307	15
81343	5-2 010102B	4730-00-266-0535	334	19
95019	5-213X	2520-01-189-2135	KITS	
13499	500-1114-003	5310-01-042-8391	40	50
			407	45
13038	500174-1	4730-00-050-4203	136	9
			136	18
			137	12
			137	24
79136	5008-125MD	5325-00-514-1299	143	21
81343	5010112B(N5)		384	5
81343	5010203CA		385	8
70412	51-11	2540-01-199-7778	327	5
71286	51L3-1-1-AA	5342-01-036-0649	237	3
71286	51L3-1X1AB	5340-01-209-6874	315	4
60602	51078-1	5340-01-456-1500	98	9
78189	511-120800-00	5310-00-995-4130	72	8
24234	513310	5340-01-270-2681	55	9
24234	513394	5340-01-271-6466	494	15
24234	513395	5340-01-271-6465	494	14
24234	513396	5340-01-271-6455	494	20
24234	513409		55	5
24234	513431	5340-01-281-7798	498	12
24234	513438	5340-01-271-6467	496	28
24234	513444	5340-01-288-6551	55	15
24234	513447	2940-01-285-2942	343	20
24234	513448		54	2

CROSS-REFERENCE INDEXES

PART NUMBER INDEX

CAGEC	PART NUMBER	STOCK NUMBER	FIG.	ITEM
24234	513450		498	5
24234	513462	2990-01-265-3298	347	1
24234	514277	5340-01-289-3228	498	16
96906	521301A203R 5.50		379	41
38506	52252	2590-01-316-2581	319	4
19207	5226154		136	10
			136	23
		5325-00-174-9829	137	5
			137	23
44940	526-1115	5310-00-081-4219	41	22
62161	528236-05		505	7
60602	52826-1	3040-01-410-9965	101	8
60602	52827-1	3040-01-410-8054	101	5
35510	5295	5310-01-271-1841	39	61
79136	5304-25-H	5325-01-047-3201	326	10
19207	5310615	5310-00-463-0268	62	25
36251	5311	4730-00-585-2653	169	25
80201	534059	5330-01-456-3884	142	11
06046	535K1-49383	6680-01-474-0384	482	3
19207	5381088	5930-00-130-5349	46	17
19207	5381233	5310-00-832-6852	46	14
39428	5416K25	4730-01-257-4905	12	30
21450	549220		318	11
7Z043	5501	5975-01-280-8922	57	10
34623	5550554	5310-01-144-2779	172	18
34623	5568211	5307-01-196-4937	142	32
			150	32
			151	24
34623	5568223	5310-01-174-8632	142	8
			150	8
34623	5568226	3110-01-027-4475	142	9
			150	9
			151	9
34623	5568227	3110-00-100-5920	142	22
			151	29
34623	5568228	3110-00-100-5937	142	3
34623	5568310	5342-01-189-9982	2	7
34623	5568666	6625-01-180-6542	47	10
34623	5568667	6680-01-298-0498	47	12
34623	5569268	5365-01-186-1294	196	3
			196	8
34623	5569270	5342-01-189-5452	196	4
			196	14
34623	5569460	5340-01-189-6748	21	14
34623	5572142	5945-01-175-7318	118	4
34623	5572983	5977-01-193-9931	68	11
34623	5573534		17	12
34623	5573684	5310-01-174-8607	142	21
			150	21
			151	28
34623	5573687	5310-01-176-0839	142	25

CROSS-REFERENCE INDEXES

PART NUMBER INDEX

CAGEC	PART NUMBER	STOCK NUMBER	FIG.	ITEM
34623	5573687	5310-01-176-0839	150	25
			151	33
34623	5573688	5310-01-231-0596	142	6
			143	6
			150	6
			151	6
34623	5573690	5365-01-177-5720	142	26
			150	26
			151	34
34623	5573692	5330-01-176-0825	142	12
			150	12
			151	12
34623	5573989	5365-01-174-8186	142	4
			150	4
			151	4
34623	5574002	5340-01-174-8493	142	13
			150	13
			151	13
34623	5574377		269	1
34623	5574856	5330-01-194-0472	8	9
34623	5574872	4710-01-188-6050	15	8
			16	7
34623	5574879	9515-01-185-3119	267	20
34623	5574921	3020-01-174-5985	142	10
			150	10
34623	5574924	5340-01-174-2271	142	24
			143	32
			150	24
			151	32
34623	5574995	6680-01-185-1264	67	4
34623	5575418	5340-01-253-3757	199	40
34623	5575466	5310-01-197-1161	209	1
34623	5575569	5342-01-194-3128	197	13
			199	54
34623	5575702	5340-01-186-1280	266	6
			284	4
34623	5575703	5340-01-186-1281	266	6
			284	4
34623	5575752	5340-01-185-8724	266	5
34623	5575936	5320-01-259-6155	224	1
			237	16
			263	5
34623	5575940	5320-01-271-1834	211	6
			212	3
			346	8
34623	5575967		328	10
34623	5577458	5310-01-220-3099	286	11
34623	5577552		17	6
34623	5577659	2530-01-184-9821	156	19
34623	5577813	3040-01-185-4388	133	11
34623	5577933	5330-01-184-6500	6	3

CROSS-REFERENCE INDEXES

PART NUMBER INDEX

CAGEC	PART NUMBER	STOCK NUMBER	FIG.	ITEM
34623	5578150	5306-01-175-7577	167	3
34623	5578197		240	15
34623	5578215		79	2
34623	5578306-B	5935-01-209-5594	79	3
34623	5578331	9515-01-189-9732	267	8
34623	5578414	5340-01-186-7229	205	28
34623	5578418	5306-01-186-7129	205	25
34623	5578466	2540-01-192-9712	403	1
			403	6
34623	5578481	4710-01-192-6113	277	42
34623	5578522	5340-01-186-9496	202	38
34623	5578547	2510-01-185-3107	205	37
34623	5578551	2510-01-189-9744	206	17
34623	5578604	4710-01-188-0028	29	10
			364	8
34623	5578635	3110-01-189-9980	21	22
34623	5578660-B	5330-01-185-0587	21	24
34623	5578667	5360-01-186-4845	165	12
34623	5578673	5355-01-190-7635	99	2
34623	5578675	5360-01-186-4844	99	26
34623	5578694	4710-01-203-0615	334	13
			386	4
34623	5578742	5360-01-186-3737	21	25
34623	5578749	2510-01-196-5311	203	4
34623	5578764	5315-01-185-7421	21	27
34623	5578802	2530-00-340-1405	157	9
			158	5
34623	5578809	2530-01-185-3879	158	12
34623	5578822	2530-01-176-4649	152	6
34623	5578823	2530-01-175-7210	152	6
34623	5578874		69	24
34623	5578875		69	10
34623	5578876		69	19
34623	5578877		72	15
34623	5578878		72	3
34623	5578887		246	21
34623	5578910		13	11
			14	18
34623	5578911		13	15
34623	5578916	4710-01-185-9666	159	1
34623	5578943	4720-01-194-5334	398	32
34623	5578947	4730-00-908-6294	387	5
34623	5578999		27	14
34623	5579007		13	7
34623	5579008		13	19
34623	5579061	2530-01-174-4174	142	31
			150	31
34623	5579292	9515-01-189-9745	267	19
34623	5579295	9515-01-185-3109	267	15
34623	5579296	9515-01-189-9731	267	15
34623	5579297	5365-01-194-0761	267	16

CROSS-REFERENCE INDEXES

PART NUMBER INDEX

CAGEC	PART NUMBER	STOCK NUMBER	FIG.	ITEM
34623	5579386		245	39
34623	5579424	3040-01-174-9130	148	1
34623	5579426		148	4
34623	5579428		148	29
34623	5579435		148	28
34623	5579436		148	22
92871	5579438	5305-01-174-8625	148	24
34623	5579442	5310-01-175-0617	148	10
34623	5579445	5365-01-175-3593	KITS	
34623	5579445-54	5365-01-381-4487	148	17
34623	5579445-55	5365-01-382-3676	148	17
34623	5579445-56	5365-01-382-0973	148	17
34623	5579445-57	5365-01-382-3710	148	17
34623	5579445-58	5365-01-382-1170	148	17
34623	5579445-59	5365-01-382-1235	148	17
34623	5579445-60	5365-01-382-1181	148	17
34623	5579445-61	5365-01-382-1135	148	17
34623	5579445-62	5365-01-382-1177	148	17
34623	5579445-63	5365-01-382-1162	148	17
34623	5579445-64	5365-01-382-3693	148	17
34623	5579445-65	5365-01-382-3726	148	17
34623	5579445-66	5365-01-382-1273	148	17
34623	5579445-67	5365-01-382-1166	148	17
34623	5579445-68	5365-01-382-1157	148	17
34623	5579445-69	5365-01-382-1240	148	17
34623	5579445-70	5365-01-382-3718	148	17
34623	5579445-71	5365-01-382-1132	148	17
34623	5579445-72	5365-01-382-1171	148	17
34623	5579445-73	5365-01-382-3715	148	17
34623	5579445-74	5365-01-388-4449	148	17
34623	5579445-75	5365-01-382-3694	148	17
34623	5579445-76	5365-01-382-1159	148	17
34623	5579445-77	5365-01-382-3447	148	17
34623	5579445-78	5365-01-382-3700	148	17
34623	5579445-79	5365-01-382-1058	148	17
34623	5579450	5365-01-180-2585	148	5
34623	5579453	5365-01-174-8174	KITS	
			KITS	20
34623	5579453-44	5365-01-381-5166	148	20
34623	5579453-45	5365-01-381-9582	148	20
34623	5579453-46	5365-01-381-5174	148	20
34623	5579453-47	5365-01-381-6332	148	20
34623	5579453-48	5365-01-381-6120	148	20
34623	5579453-49	5365-01-380-5345	148	20
34623	5579453-50	5365-01-381-6151	148	20
34623	5579453-51	5365-01-381-6276	148	20
34623	5579453-52	5365-01-381-6223	148	20
34623	5579453-53	5365-01-381-6080	148	20
34623	5579453-54	5365-01-381-6250	148	20
34623	5579453-55	5365-01-381-6145	148	20
34623	5579453-56	5365-01-381-6174	148	20

CROSS-REFERENCE INDEXES

PART NUMBER INDEX

CAGEC	PART NUMBER	STOCK NUMBER	FIG.	ITEM
34623	5579453-57	5365-01-381-6210	148	20
34623	5579453-58	5365-01-381-6292	148	20
34623	5579453-59	5365-01-381-6110	148	20
34623	5579453-60	5365-01-381-6158	148	20
34623	5579453-61	5365-01-381-6313	148	20
34623	5579453-62	5365-01-381-6226	148	20
34623	5579453-63	5365-01-381-6076	148	20
34623	5579453-64	5365-01-381-6303	148	20
34623	5579453-65	5365-01-381-6164	148	20
34623	5579453-66	5365-01-381-6197	148	20
34623	5579453-67	5365-01-381-6229	148	20
34623	5579453-68	5365-01-381-6086	148	20
34623	5579453-69	5365-01-381-6122	148	20
34623	5579453-70	5365-01-381-6154	148	20
34623	5579453-71	5365-01-381-6188	148	20
34623	5579453-72	5365-01-381-6317	148	20
34623	5579453-73	5365-01-381-6240	148	20
34623	5579453-74	5365-01-381-6112	148	20
34623	5579453-75	5365-01-381-6258	148	20
34623	5579453-76	5365-01-381-6165	148	20
34623	5579453-77	5365-01-381-6211	148	20
34623	5579453-78	5365-01-381-9588	148	20
34623	5579453-79	5365-01-438-1556	148	20
34623	5579453-80	5365-01-381-6113	148	20
34623	5579453-81	5365-01-381-6261	148	20
34623	5579453-82	5365-01-381-6175	148	20
34623	5579453-83	5365-01-381-6278	148	20
34623	5579474	2530-01-175-7213	144	20
			152	20
34623	5579475	2530-01-175-7212	144	20
			152	20
34623	5579485	2510-01-188-3228	203	18
34623	5579501	3020-01-191-8784	148	27
34623	5579538	2510-01-189-0890	184	6
34623	5579620	2510-01-189-0891	182	7
34623	5579621	2510-01-187-7031	182	7
34623	5579658	5325-01-214-5007	327	21
34623	5579716	2510-01-189-9720	204	11
34623	5579717	2540-01-189-9729	204	11
34623	5579811	5365-01-211-6083	246	25
34623	5579818	5340-01-195-5397	243	19
34623	5579861	4330-01-189-0889	19	6
34623	5579894	4710-01-192-9546	268	37
34623	5579895	4710-01-192-7965	268	31
34623	5579941	5365-01-211-5063	62	12
34623	5579991	2520-01-174-9580	148	12
34623	5581162	5330-01-252-5377	197	32
34623	5581163	5330-01-252-5378	199	60
34623	5581211		46	5
34623	5581213		199	23
34623	5581260	2590-01-188-3225	226	34

CROSS-REFERENCE INDEXES

PART NUMBER INDEX

CAGEC	PART NUMBER	STOCK NUMBER	FIG.	ITEM
34623	5581307	5340-01-197-8673	216	3
34623	5581313		325	3
34623	5581315	5325-01-199-2254	322	6
			324	6
34623	5581319	2540-01-203-7721	320	21
			324	26
34623	5581320	2540-01-200-1994	320	9
			320	21
			324	12
			324	26
34623	5581321	5310-01-205-9056	316	13
			320	11
			320	23
			324	18
			324	30
			375	18
			378	21
34623	5581331	2540-01-199-6760	389	6
34623	5581347	2540-01-197-5476	325	15
34623	5581348	2510-01-189-9724	320	19
			324	24
34623	5581349	2510-01-189-9725	320	19
			324	24
34623	5581362	5340-01-207-0717	198	24
34623	5581364	5342-01-204-9610	376	16
34623	5581366		225	7
			325	4
34623	5581367	2540-01-196-5313	225	8
34623	5581371	2590-01-198-2895	317	6
34623	5581372	2590-01-197-4898	317	6
34623	5581392-B	5315-01-197-1494	326	8
34623	5581396		325	6
34623	5581439	5305-01-203-8346	317	4
			321	5
			325	8
34623	5581461	5310-01-018-5332	324	16
34623	5581464	5340-01-202-7445	323	3
			326	3
34623	5581505	5340-01-199-2206	319	5
			320	3
			322	4
			324	4
13445	5582	5930-00-736-3539	39	29
			59	19
34623	5582303	2520-01-210-2624	148	21
34623	5582366	5310-01-189-8476	159	9
			160	5
			161	10
			162	16
34623	5582412	5340-01-191-0746	16	35
34623	5582423	5340-01-198-2248	247	17

CROSS-REFERENCE INDEXES

PART NUMBER INDEX

CAGEC	PART NUMBER	STOCK NUMBER	FIG.	ITEM
34623	5582423	5340-01-198-2248	249	39
34623	55824368		276	27
34623	5582439	5340-01-199-3499	272	21
34623	5582479		124	1
34623	5582481	5975-01-208-9618	44	22
			44	27
34623	5582605	5340-01-191-3359	206	12
34623	5582606		15	14
34623	5582608	5340-01-191-8186	225	14
			240	11
			251	16
			251	24
			251	30
			251	40
			252	18
			252	33
			252	38
			253	6
			253	11
			253	16
			253	26
			253	31
			255	5
			255	11
			255	15
			255	24
			255	31
			256	3
			257	2
			258	4
			259	4
			260	1
			262	2
			262	10
			263	2
			264	3
			265	3
			289	2
			429	9
			430	5
			430	21
			430	32
34623	5582642		123	6
34623	5582643		141	2
34623	5582644		399	10
			400	8
34623	5582649		141	7
34623	5582677	5310-01-210-7938	202	40
34623	5582763	5340-01-190-0333	179	18
			180	28
34623	5582815	4710-01-189-1080	124	4

CROSS-REFERENCE INDEXES

PART NUMBER INDEX

CAGEC	PART NUMBER	STOCK NUMBER	FIG.	ITEM
34623	5582817	4710-01-188-3516	124	6
			125	7
34623	5582819	4710-01-188-3515	124	7
			125	6
34623	5582843	6680-01-179-4349	400	4
34623	5582851	5365-01-193-2951	169	18
34623	5582902		249	10
34623	5582936	5330-01-203-9187	368	1
34623	5582968	3010-01-292-6428	148	9
34623	5583066	5365-01-218-9848	285	12
34623	5583120		245	18
34623	5583141	5306-01-195-0277	269	17
34623	5583156	5365-01-194-5093	270	18
34623	5583215	5365-01-214-4987	196	11
34623	5583219	5365-01-209-7831	181	5
			184	9
34623	5583231	5340-01-203-9391	278	15
34623	5583235	5340-01-213-4267	240	17
34623	5583291	2540-01-210-2749	268	13
34623	5583352	4710-01-203-1304	368	28
34623	5583386	4730-01-233-4987	384	15
34623	5583395	5980-01-186-8319	46	2
34623	5583555	5340-01-259-7523	247	16
34623	5583556-B	5340-01-283-2458	247	9
34623	5583558	5365-01-198-3399	248	12
34623	5583568	5340-01-197-8674	248	16
			429	14
34623	5583571	5365-01-198-3505	248	22
34623	5583572	5365-01-198-3401	248	18
34623	5583576	5342-01-193-7088	488	15
34623	5583606	5306-01-194-6433	97	5
34623	5583650	4710-01-188-8780	124	3
34623	5583676	2590-01-188-5081	245	1
34623	5583717	5340-01-209-7799	85	27
			88	8
34623	5583758		148	2
34623	5583855		399	19
34623	5583993	5340-01-197-3478	245	19
34623	5584019	4710-01-186-1009	13	1
34623	5584021	4710-01-186-1010	13	5
34623	5584023	4710-01-186-0665	13	16
			14	23
34623	5584024	4710-01-187-6759	13	9
			14	16
34623	5584032	5340-01-196-0572	277	38
34623	5584104	5340-01-197-6715	245	2
34623	5584105	5340-01-197-6716	245	6
34623	5584107	5315-01-198-3346	245	12
34623	5584110	2520-01-210-3506	99	19
34623	5584134	5365-01-198-3400	248	21
34623	5584135	5340-01-203-5629	245	3

CROSS-REFERENCE INDEXES

PART NUMBER INDEX

CAGEC	PART NUMBER	STOCK NUMBER	FIG.	ITEM
34623	5584136	5340-01-203-5630	245	7
34623	5584137	5365-01-181-5085	142	23
			150	23
34623	5584138	5340-01-197-2716	270	29
34623	5584142	4710-01-186-1016	159	10
34623	5584146	4710-01-185-9667	160	8
34623	5584151	2510-01-192-5950	270	15
34623	5584152	2540-01-192-8283	270	15
34623	5584173		141	8
34623	5584259	5340-01-198-7580	280	29
34623	5584260	5340-01-197-6714	281	29
34623	5584261	2540-01-198-7581	281	29
34623	5584264	2510-01-211-3229	280	33
34623	5584278	5315-01-204-2328	280	39
			281	39
34623	5584294	5340-01-211-1645	280	52
34623	5584299	5365-01-197-9383	280	21
			281	21
34623	5584325	5340-01-204-2458	280	6
			281	6
34623	5584341	2910-01-186-6038	15	16
34623	5584358		269	1
34623	5584372		141	3
34623	5584373		399	5
34623	5584383		141	1
34623	5584384	5330-01-209-7723	169	24
34623	5584391	5325-01-210-1633	84	6
34623	5584421	5340-01-203-0324	280	18
			281	18
34623	5584423	5340-01-197-5477	198	17
34623	5584436	5365-01-201-4749	280	5
			280	5
			281	5
			281	5
34623	5584462	5310-01-213-4185	142	20
			143	27
			150	20
			151	27
34623	5584559	4710-01-278-1053	12	10
34623	5584575-B	5365-01-213-5739	398	20
34623	5584588	4720-01-203-7789	12	8
34623	5584707		280	31
			281	31
34623	5584710	5310-01-203-3217	280	20
			281	20
			429	3
			430	3
			430	22
			430	39
34623	5584713	5310-01-198-3428	280	27
			281	27

CROSS-REFERENCE INDEXES

PART NUMBER INDEX

CAGEC	PART NUMBER	STOCK NUMBER	FIG.	ITEM
34623	5584765	5340-01-211-5083	274	31
34623	5584769	2530-01-175-7211	144	6
34623	5584770	2530-01-176-4650	144	6
34623	5584813		207	5
34623	5584836		207	4
34623	5584854	5360-01-195-6200	243	25
34623	5584867	5340-01-197-8675	280	6
			281	6
34623	5584891	5340-01-211-0838	277	29
			278	8
34623	5584963	5340-01-211-3132	202	14
34623	5584977	5340-01-196-2573	403	19
34623	5584999	5365-01-193-4479	403	20
34623	5585094	5340-01-208-8688	12	32
34623	5585103	5310-01-188-0745	169	3
34623	5585111	2510-01-303-5769	47	8
34623	5585132-C	5340-01-252-8537	208	24
34623	5585133	5340-01-255-4655	208	26
34623	5585143	5365-01-252-8026	208	30
34623	5585152	5310-01-185-8692	328	4
34623	5585154	5340-01-203-8608	225	4
			226	38
34623	5585178	5365-01-213-4239	225	24
			226	11
34623	5585245		327	29
34623	5585259	5306-01-323-5535	281	50
34623	5585259-B	5306-01-323-5535	198	22
34623	5585445	2590-01-270-9446	295	5
34623	5585446	2510-01-270-9447	295	4
34623	5588022	2815-01-168-7912	4	22
34623	5588032	5340-01-209-7807	153	19
34623	5588062	5306-01-286-7182	203	25
			204	10
34623	5588063		280	30
			281	30
34623	5588064	5305-01-204-6502	84	1
			85	25
34623	5588167	5340-01-185-8821	202	27
34623	5588172	5340-01-186-7658	202	8
34623	5588179	5340-01-189-9979	202	15
34623	5588193	5340-01-291-5711	417	10
34623	5588629	5340-01-212-2407	88	32
34623	5588656	2540-01-334-4333	403	18
34623	5588675	5340-01-212-4887	23	9
			24	6
34623	5588694	4710-01-203-0607	334	14
			366	19
			386	5
34623	5588696	4710-01-203-0608	334	18
			384	1
34623	5588698		334	17

CROSS-REFERENCE INDEXES

PART NUMBER INDEX

CAGEC	PART NUMBER	STOCK NUMBER	FIG.	ITEM
34623	5588701	4720-01-210-0484	7	9
34623	5588702	2510-01-262-6010	198	11
34623	5588705	5325-01-214-7817	80	11
34623	5588767		19	12
34623	5588778	2540-01-309-4459	23	11
			24	12
34623	5588785	5340-01-213-4667	75	48
34623	5588872		288	2
34623	5588877	5340-01-281-3429	288	18
34623	5588878	2540-01-275-6203	288	15
34623	5588904	5306-01-265-8767	262	5
34623	5588927	5305-01-272-9959	238	7
34623	5588931	2510-01-270-7925	296	10
34623	5588932	2510-01-270-6487	296	21
34623	5588959	5340-01-266-3845	293	14
34623	5589012-B	5995-01-269-9525	339	11
34623	5589028	2540-01-196-4721	188	16
34623	5589033	2540-01-196-4722	188	16
34623	5589067	5306-01-204-2139	280	28
34623	5589134	5342-01-190-7735	103	15
34623	5589167	5995-01-201-7495	412	1
34623	5589275		374	1
34623	5589336	5342-01-275-0532	217	5
34623	5589357	5340-01-272-4942	217	4
34623	5589425	5340-01-272-2732	224	17
34623	5589505	5360-01-275-3512	218	2
34623	5589581	5340-01-274-9899	238	16
34623	5589748-C	5340-01-272-4935	289	24
34623	5589763	2510-01-270-9707	300	1
34623	5589776	2540-01-280-4159	293	18
34623	5589785		288	2
34623	5589853-A	5340-01-309-7900	296	16
34623	5589864	5340-01-272-5594	287	29
34623	5589868	5340-01-273-4667	287	25
34623	5589918	5340-01-310-5321	224	4
34623	5589947	5330-01-272-7473	295	3
34623	5589961	5340-01-272-8410	214	31
34623	5589970	5330-01-282-0913	341	5
34623	5590023		177	1
34623	5590024		177	7
34623	5590025		178	6
34623	5590029	5325-01-255-5062	414	21
34623	5590149	5320-01-218-5802	286	31
34623	5590150	5320-01-219-7261	286	6
34623	5590155	5325-01-255-5063	428	23
34623	5590177	9905-01-248-9551	356	6
34623	5590244	5999-01-197-5465	410	KITS
34623	5590284	4710-01-210-3503	333	7
34623	5590387	5340-01-211-4025	23	12
34623	5590530	2590-01-187-7039	156	20
34623	5590540	3040-01-465-3178	156	11

CROSS-REFERENCE INDEXES

PART NUMBER INDEX

CAGEC	PART NUMBER	STOCK NUMBER	FIG.	ITEM
34623	5590544		367	3
34623	5590550	5340-01-266-2995	202	7
34623	5590551	2520-01-188-5131	148	11
34623	5590556	5310-01-208-5252	374	23
34623	5590602	5360-01-214-3695	153	14
34623	5590630	2540-01-197-5463	374	20
34623	5590657	5340-01-189-9861	12	15
34623	5590669	2540-01-314-1121	284	16
			439	9
34623	5591114	5340-01-260-4881	268	24
34623	5591115	4710-01-251-3076	268	27
34623	5591157		149	4
34623	5591158		149	1
34623	5591161		149	5
34623	5591168		123	5
34623	5591169	5340-01-197-2438	62	24
34623	5591180		18	6
34623	5591200	5940-01-204-8830	412	8
34623	5591210		398	30
34623	5591252	5340-01-212-3709	28	6
34623	5591253		123	1
			399	7
34623	5591279	2530-01-203-5663	142	33
			150	33
34623	5591280	2530-01-203-5662	142	18
			150	18
34623	5591286	5307-01-196-4717	4	26
34623	5591313	5330-01-255-0207	202	5
34623	5591315	5330-01-255-0208	202	11
34623	5591333		403	7
34623	5591334		403	7
34623	5591345	5331-01-176-0923	167	4
34623	5591482		141	6
34623	5591483		141	5
			149	3
34623	5591507	5310-01-212-2303	277	27
34623	5591513	5310-01-265-8968	245	27
34623	5591514	5310-01-217-0715	279	34
34623	5591553	2590-01-261-5485	230	22
			231	27
34623	5591575	5365-01-212-0144	272	32
34623	5591577-B	5365-01-252-9214	205	11
34623	5591614	4710-01-265-3231	334	8
34623	5591648	5340-01-213-5735	202	2
			218	7
			253	35
34623	5591707		398	29
34623	5591712	2590-01-262-7706	227	29
34623	5591713	2590-01-263-3254	227	29
34623	5591781	5305-01-185-7122	179	7
			180	8

CROSS-REFERENCE INDEXES

PART NUMBER INDEX

CAGEC	PART NUMBER	STOCK NUMBER	FIG.	ITEM
34623	5591781	5305-01-185-7122	184	11
34623	5591935	2540-01-390-5711	370	3
34623	5591937		124	5
34623	5591938		124	8
34623	5591957	5340-01-213-4662	204	13
34623	5592010	5340-01-272-6633	238	12
34623	5592011	5360-01-278-9723	238	20
34623	5592013	3040-01-270-7961	238	15
34623	5592019	2540-01-271-3773	288	28
34623	5592020	5340-01-272-7493	288	31
34623	5592085		217	6
34623	5592234	5340-01-297-1549	296	13
34623	5592725	2510-01-252-8461	284	6
34623	5592726	2510-01-252-7903	284	8
34623	5592727	2510-01-252-7904	284	10
34623	5592737	2510-01-175-7224	181	17
34623	5592814	5305-01-253-2998	241	11
34623	5592817	5305-01-256-6870	429	13
			430	27
			430	34
34623	5592818	5310-01-253-8380	89	11
			214	9
			307	6
			308	15
			339	29
			414	22
		5310-01-152-0598	416	25
		5310-01-253-8380	428	24
34623	5592819	5305-01-250-6582	57	8
34623	5592823	5305-01-251-0728	249	23
			253	25
			256	6
			257	9
			259	10
			262	3
			263	6
			264	2
			264	2
			265	2
34623	5592832		153	20
			205	26
			242	3
			250	21
			266	2
			268	11
			268	28
			277	6
			279	33
			284	2
			292	14
		5310-01-252-0512	328	9

CROSS-REFERENCE INDEXES

PART NUMBER INDEX

CAGEC	PART NUMBER	STOCK NUMBER	FIG.	ITEM
34623	5592832		333	22
			339	19
			403	4
			409	2
			410	7
			413	2
			414	6
			415	2
			416	6
			417	5
			418	5
			419	6
			420	2
			421	2
			422	2
			423	2
			428	6
34623	5592838	5305-01-253-2989	240	10
34623	5592840	5305-01-254-2460	92	17
			199	25
			497	1
34623	5592846	5305-01-255-1017	249	19
34623	5592861	5305-01-254-2453	269	26
34623	5592862	5305-01-254-2451	249	40
34623	5592878	5305-01-250-6583	46	22
34623	5592879	5306-01-254-2360	279	37
34623	5592884	5305-01-255-1016	247	21
			247	26
			248	23
			249	8
			249	32
34623	5592899	5305-01-254-2461	398	13
34623	5592900	5305-01-255-4606	222	9
			347	2
34623	5592916	5310-01-252-0513	241	6
			249	25
			272	17
34623	5592926	5310-01-253-8949	248	15
			280	4
			280	53
			281	4
			281	53
			286	18
34623	5592927	5310-01-253-8957	226	22
34623	5592952	5305-01-250-6588	133	3
34623	5592954	5305-01-206-8401	75	28
			84	16
34623	5592958	5310-01-253-1615	338	27
			410	16
34623	5592970	5305-01-255-2675	246	27
			216C	15

CROSS-REFERENCE INDEXES

PART NUMBER INDEX

CAGEC	PART NUMBER	STOCK NUMBER	FIG.	ITEM
34623	5592993	5305-00-059-3660	255	17
34623	5592994	5305-01-252-9108	199	36
34623	5592995	5310-01-253-8928	284	17
			331	23
34623	5592998	5310-01-250-6587	59	10
			99	12
34623	5592999	5310-01-253-0058	199	58
34623	5593000	5310-01-254-4258	269	29
34623	5593006	5305-01-256-0406	215	6
			430	26
34623	5593011	5305-01-251-9222	103	11
			104	17
34623	5593024	5306-01-254-2359	177	16
34623	5593027	5310-01-255-9452	413	10
34623	5593030	5305-01-268-5680	333	40
34623	5593033	5310-01-252-2999	59	7
			75	32
			84	10
			153	6
			330	1
34623	5593035	5310-01-255-2695	58	10
			237	6
			248	14
			249	12
			249	34
			252	9
34623	5593038	5310-01-251-0711	49	10
			333	2
34623	5593046	5310-01-251-0725	408	10
			408	26
34623	5593047	5310-01-266-6392	488	17
34623	5593048	5310-01-252-0481	63	5
			246	9
			246	14
			247	13
			247	24
			248	9
			249	6
			249	21
			249	33
			251	15
			251	25
			251	39
			252	17
			252	39
			253	5
			253	12
			253	15
			253	32
			253	39
			255	4

CROSS-REFERENCE INDEXES

PART NUMBER INDEX

CAGEC	PART NUMBER	STOCK NUMBER	FIG.	ITEM
34623	5593048	5310-01-252-0481	255	12
			255	14
			255	25
			255	29
34623	5593050	5320-01-254-4251	197	6
			230	21
			231	26
			235	17
			337	24
			417	9
34623	5593053	5310-01-251-0726	52	12
			56	15
			58	12
			59	8
			83	8
			258	2
			259	7
			262	12
			263	8
			289	14
			326	7
			338	7
			410	11
			412	20
			426	19
			427	19
			428	11
34623	5593189	2590-01-249-1579	255	13
34623	5593200	5306-01-387-7457	270	31
34623	5593213	5310-01-205-7923	26	5
			97	7
			133	5
			155	18
			251	5
			270	32
			274	11
			275	2
			276	11
34623	5593218	5310-01-253-8438	286	28
0MAY0	5593221	5310-01-258-1536	26	4
			174	12
			398	26
34623	5593225	5305-00-550-1537	205	24
34623	5593235	5310-01-257-7719	169	32
			205	7
			206	27
34623	5593241	5310-01-253-8952	280	12
			280	37
			281	12
			281	37
34623	5593242	5310-01-253-8953	280	19

CROSS-REFERENCE INDEXES

PART NUMBER INDEX

CAGEC	PART NUMBER	STOCK NUMBER	FIG.	ITEM
34623	5593242	5310-01-253-8953	280	35
			281	19
			281	35
			335	12
			336	9
34623	5593258	5305-01-253-2993	205	33
			206	20
34623	5593260	5310-01-251-0747	42	3
34623	5593261	5310-01-253-0060	205	8
			206	28
34623	5593284	5305-01-255-4611	327	22
34623	5593285	5310-01-250-7836	99	17
			202	36
			203	19
34623	5593286	5305-01-254-2452	248	2
			272	22
34623	5593294	5310-01-253-8951	85	5
			88	3
			272	5
34623	5593308	5310-01-254-5352	46	20
			208	3
34623	5593309	4730-01-255-0925	331	32
34623	5593312	5310-01-260-4839	165	2
			181	11
			182	1
			184	14
			195	1
			270	34
34623	5593313	5305-01-254-2459	268	1
			270	40
34623	5593315	5305-01-260-8881	426	14
			427	13
34623	5593318	5310-01-278-9555	208	21
			283	19
34623	5593320	5310-01-253-8948	179	4
			180	5
			181	2
			182	3
			187	12
			188	2
			191	2
			194	1
			283	3
			417	15
34623	5593328	5305-01-251-0756	26	7
34623	5593345	5306-01-263-6142	279	32
34623	5593348	5306-01-251-1616	142	27
34623	5593359	5306-01-255-2662	415	6
34623	5593387	5310-01-272-6546	287	32
3M915	5593390	5305-01-272-5433	65	23
			260	6

CROSS-REFERENCE INDEXES

PART NUMBER INDEX

CAGEC	PART NUMBER	STOCK NUMBER	FIG.	ITEM
3M915	5593390	5305-01-272-5433	289	27
34623	5593409	5305-01-272-9042	56	25
			57	2
			65	2
			92	11
			95	29
			283	23
			304	9
			339	1
34623	5593413		65	21
			91	8
			93	20
			216	2
34623	5593416	5310-00-889-8782	140	2
			147	2
34623	5593421	5305-01-270-5435	335	10
			336	7
3M915	5593430	5305-01-270-5418	211	21
			212	19
34623	5593432	5305-01-283-7776	293	21
34623	5593479	6150-01-473-8640	56	14
34623	5593495	5340-01-474-8830	463	22
34623	5593535	5325-01-290-1695	91	12
34623	5593597	5310-01-272-5470	238	14
34623	5593599	5935-01-282-7833	52	6
			57	5
34623	5593609	2590-01-248-7622	251	33
34623	5593615	2510-01-307-0152	331	7
34623	5593624	9530-01-248-7621	243	31
			244	15
34623	5593625	5340-01-260-9027	207	9
			318	8
			325	21
34623	5593634	5305-01-256-0405	244	20
34623	5593641	2590-01-248-2531	251	12
34623	5593642	2590-01-248-4874	251	11
34623	5593661	2520-01-249-1434	97	8
			101	10
34623	5593675	5340-01-259-0327	251	49
34623	5593691	5310-01-251-0748	58	8
			99	8
			208	15
			252	2
			252	2
			334	4
			338	20
			339	15
			417	2
			418	2
			419	2
			420	7

CROSS-REFERENCE INDEXES

PART NUMBER INDEX

CAGEC	PART NUMBER	STOCK NUMBER	FIG.	ITEM
34623	5593691	5310-01-251-0748	421	4
			422	6
			423	10
			425	2
			426	4
			427	3
34623	5593694	5365-01-210-4903	44	1
34623	5593807	5340-01-258-1547	279	36
34623	5593817	2520-01-174-5849	148	15
34623	5593847	5360-01-265-9116	156	4
34623	5593910	5330-01-185-8715	205	40
34623	5593912	5330-01-185-8714	206	11
34623	5593913	5305-01-259-6322	83	17
			412	17
			425	19
34623	5593926	2530-01-235-8688	167	12
			167	12
34623	5593927	5342-01-268-0921	275	23
34623	5593930	5330-01-195-9049	270	24
34623	5593947	4710-01-251-3075	227	22
34623	5593978	5360-01-260-0700	153	24
34623	5593982		208	36
34623	5593985		249	16
34623	5593990	5342-01-260-7853	430	29
34623	5593993		142	7
			150	7
			151	7
34623	5594002	4710-01-251-6103	227	4
34623	5594076	2590-01-262-7707	227	11
34623	5594077	2590-01-261-6851	227	24
34623	5594083		18	8
34623	5594101-C	5340-01-297-2800	21	5
34623	5594178	5306-01-270-7332	331	4
			332	1
34623	5594249	5340-01-289-3243	429	2
34623	5594252	9515-01-249-1591	429	7
34623	5594278		429	32
34623	5594317		52	5
			57	4
34623	5594319	9905-01-294-3356	52	8
			57	7
34623	5594531		143	23
			151	23
34623	5594572	5340-01-249-1575	179	16
34623	5594676	2590-01-248-9531	286	40
34623	5594703	5340-01-256-4657	246	36
34623	5595214	4730-01-247-6763	150	5
34623	5595216	5340-01-256-9318	324	17
34623	5595217	5340-01-255-9919	316	20
			320	17
			320	32

CROSS-REFERENCE INDEXES

PART NUMBER INDEX

CAGEC	PART NUMBER	STOCK NUMBER	FIG.	ITEM
34623	5595217	5340-01-255-9919	324	17
			324	29
34623	5595227		269	1
34623	5595228		269	1
34623	5595393	2510-01-236-6488	278	4
34623	5595454	5365-01-186-7764	193	1
34623	5595531	5330-01-258-4664	272	6
34623	5595551	2590-01-291-1033	417	13
34623	5595662	5306-01-254-2358	148	3
34623	559574C		384	10
34623	5595964	5310-01-256-0416	328	16
34623	5595966	6670-01-261-6844	167	12
34623	5595968	6670-01-261-6845	167	12
34623	5595969	6670-01-261-6846	167	12
34623	5595970	6670-01-262-8646	167	12
34623	5595971	6670-01-261-8011	167	12
34623	5595972	6670-01-261-8012	167	12
34623	5595973	6670-01-261-8013	167	12
34623	5595995		429	31
34623	5596009	2590-01-262-9515	253	14
34623	5596025	4210-01-204-0913	241	10
34623	5596028	5340-01-256-4517	251	27
			252	27
			252	27
			253	22
3M915	5596167	5310-01-298-7770	398	21
34623	5596171		225	16
34623	5596172		225	33
			226	18
34623	5596198	5340-01-440-1435	270	37
34623	5596249	5355-01-247-3593	14	10
			331	28
34623	5596271	5306-01-185-7071	71	3
34623	5596306	5365-01-255-0965	153	26
			154	8
34623	5596374	5340-01-260-9874	266	3
34623	5596459	5315-01-255-2763	243	34
34623	5596460	5315-01-255-2764	243	26
34623	5596566	5310-01-253-8440	410	34
			412	25
34623	5596580	5330-01-270-1353	274	7
34623	5596642	5365-01-255-4990	277	5
34623	5596643	5365-01-255-4991	277	5
34623	5596644	5365-01-255-4633	277	5
34623	5596645	5365-01-255-4634	277	5
34623	5596736	5340-01-259-8579	266	17
34623	5596794	5340-01-290-2279	417	6
34623	5596795	5975-01-312-5469	417	1
34623	5596797	5340-01-290-8473	423	6
34623	5596803	5306-01-273-6333	154	2
34623	5596814	5365-01-272-7504	335	11

CROSS-REFERENCE INDEXES

PART NUMBER INDEX

CAGEC	PART NUMBER	STOCK NUMBER	FIG.	ITEM
34623	5596814	5365-01-272-7504	336	8
34623	5596843	5340-01-290-4887	425	4
			427	5
34623	5596946	5820-01-287-9612	428	KITS
34623	5597035	5365-01-280-5875	337	25
34623	5597048	5310-01-260-5784	208	17
34623	5597050	4730-01-257-3348	148	23
34623	5597086	5340-01-290-8390	417	17
34623	5597090	5340-01-270-8483	213	12
34623	5597096	5340-01-273-2342	213	10
34623	5597128		52	2
34623	5597136-C	6150-01-289-4761	424	1
34623	5597137	5995-01-290-1719	426	1
			427	1
34623	5597138	5995-01-291-6377	425	1
			426	2
			427	2
34623	5597142	5342-01-277-9102	147	3
34623	5597150	5340-01-291-5186	425	7
			427	8
34623	5597151	5340-01-290-6343	426	3
34623	5597155	5340-01-290-4888	426	7
34623	5597172	5340-01-186-1817	158	6
34623	5597186	5340-01-264-6108	430	14
34623	5597197		59	1
34623	5597208		95	14
34623	5597243	2590-01-276-7633	65	1
34623	5597248	5935-01-269-8992	52	19
			56	6
34623	5597249	5945-01-266-4593	52	18
			56	9
34623	5597252	5306-01-264-3531	174	1
34623	5597262		149	2
34623	5597267	5340-01-273-4668	57	9
34623	5597277		95	6
34623	5597286	5340-01-244-5765	15	15
			16	14
			180	2
34623	5597334	2530-01-291-4597	154	3
34623	5597344	5342-01-257-7706	35	19
34623	5597347	5310-01-259-7554	328	11
34623	5597349	5306-01-276-1621	283	11
			438	11
34623	5597350	5340-01-290-6342	417	14
34623	5597351	5365-01-265-8937	283	16
34623	5597356	5340-01-291-4537	417	12
34623	5597357	5340-01-291-8915	418	3
			419	3
			420	8
			421	5
			422	7

CROSS-REFERENCE INDEXES

PART NUMBER INDEX

CAGEC	PART NUMBER	STOCK NUMBER	FIG.	ITEM
34623	5597357	5340-01-291-8915	423	11
34623	5597360	5340-01-277-4427	155	4
34623	5597371	5330-01-289-9231	425	12
34623	5597372	5340-01-298-9691	417	14
34623	5597397	5340-01-272-5517	219	7
34623	5597496	5995-01-291-6384	428	1
34623	5597571	5340-01-271-9573	220	4
34623	5597572	5340-01-271-9574	220	4
34623	5597579	2510-01-265-1138	211	1
34623	5597580	2510-01-265-1139	211	1
34623	5597593		52	20
34623	5597595	2510-01-290-5675	423	5
34623	5597600	6150-01-285-3901	96	1
34623	5597601		59	1
34623	5597602	5340-01-276-5850	290	1
34623	5597603	5342-01-274-6210	290	1
34623	5597687	5330-01-281-0911	293	29
34623	5597689	7690-01-291-2974	354	6
34623	5597710	5340-01-274-3498	216	1
34623	5597736		56	23
34623	5597737	2540-01-285-6087	56	1
34623	5597738	5930-01-266-4592	55	11
			56	17
34623	5597754	5340-01-277-4426	219	9
34623	5597768		311	8
			312	4
34623	5597769	4030-01-272-7573	311	9
			312	5
34623	5597777	2520-01-358-3160	140	4
			147	4
34623	5597808	5340-01-272-9105	288	18
34623	5597820	5340-01-274-3287	260	12
34623	5597870	2510-01-275-8026	211	9
34623	5597872	5342-01-272-8391	492	4
9C234	5597876	4720-01-265-3223	492	5
34623	5597890	5342-01-274-9884	155	8
34623	5597895	2510-01-265-3157	293	17
34623	5597899	5340-01-270-8490	338	25
34623	5597900		343	4
34623	5597916	5331-01-265-8809	492	11
9C234	5597929	4710-01-265-3232	492	2
34623	5597935	4710-01-265-3233	492	1
34623	5597985	5330-01-298-8127	340	7
34623	5597988	5340-01-272-3389	58	6
34623	5598002	2990-01-269-6625	337	1
34623	5598011	5930-01-266-3919	58	4
34623	5598032		222	22
34623	5598046	5340-01-272-5595	58	1
34623	5598052	5340-01-288-2127	292	6
34623	5598061		222	20
34623	5598103	5340-01-287-5825	227	35

CROSS-REFERENCE INDEXES

PART NUMBER INDEX

CAGEC	PART NUMBER	STOCK NUMBER	FIG.	ITEM
34623	5598104	2540-01-270-4353	298	6
34623	5598107	5365-01-273-0010	298	9
34623	5598113	5365-01-272-8376	298	5
34623	5598117	5355-01-272-5824	56	24
34623	5598121	5999-01-272-0018	338	12
			339	9
			410	12
34623	5598124	5340-01-280-5985	311	16
34623	5598130	5975-01-270-8546	59	2
34623	5598131	5340-01-272-7712	311	1
34623	5598163	5340-01-290-2265	295	2
34623	5598183	2520-01-297-5200	148	8
34623	5598208	5340-01-300-3715	141	13
			149	7
34623	5598209	2530-01-296-9333	138	8
			139	8
			145	8
			146	8
34623	5598213	3030-01-256-3616	32	2
34623	5598218	5340-01-289-6216	53	1
34623	5598221	5340-01-289-4475	53	2
34623	5598247	3040-01-290-6758	337	16
34623	5598250-B	5340-01-290-2263	337	14
34623	5598253	5340-01-289-3231	337	10
34623	5598256-C	5340-01-290-2761	337	11
34623	5598266	4710-01-265-3228	335	2
			335	8
			336	5
34623	5598272	4820-00-287-5627	336	14
34623	5598278	5340-01-289-5055	308	12
34623	5598279	5340-01-288-6550	307	10
			308	11
34623	5598282	3030-01-265-3171	490	11
34623	5598285	5340-01-291-2301	307	5
34623	5598286	5340-01-289-4474	307	11
34623	5598293	5340-01-439-5636	497	3
34623	5598307		497	6
34623	5598309	3040-01-290-6757	337	22
34623	5598310	3040-01-290-6760	337	23
34623	5598627	5310-01-286-6077	44	9
34623	5598650	5985-01-269-8271	341	2
34623	5598767	2530-01-203-5746	142	1
			150	1
34623	5598864	2540-01-425-1617	293	7
34623	5598904	5340-01-289-3245	295	11
7X677	560613	5340-01-148-7529	11	31
86928	5610-140-62	5310-01-256-4491	243	12
			244	6
70040	5614017	2920-01-188-3863	20	1
99688	56480	5331-00-185-0075	467	11
19220	565698-4	5315-01-300-3012	280	24

CROSS-REFERENCE INDEXES

PART NUMBER INDEX

CAGEC	PART NUMBER	STOCK NUMBER	FIG.	ITEM
19220	565698-4	5315-01-300-3012	281	24
7X677	5667628	5310-00-166-8567	172	17
7X677	5688037	5360-01-149-6308	176	9
48018	5688049	5330-00-848-4439	176	11
52788	5692682		176	8
19207	57K0106	2590-01-328-2904	437	KITS
19207	57K0107	2510-01-364-3120	KITS	
19207	57K0109	2540-01-288-5240	KITS	
19207	57K0112	2540-01-316-0892	317	
19207	57K0123	2540-01-316-6624	321	
19207	57K0137	2540-01-394-4454	375	KITS
19207	57K0155	2540-01-329-8075	321	
19207	57K0156	2540-01-329-8072	317	
19207	57K0157	2540-01-329-8073	319	
19207	57K0158	2540-01-329-8074	323	
19207	57K0160	2540-01-450-4022	319	
19207	57K0161	2540-01-412-0929	321	
19207	57K0163	2540-01-451-1112	323	
19207	57K0216	2540-01-338-8081	402	13
			402	KITS
19207	57K0217	2510-01-338-8087	209	
19207	57K0218	2590-01-342-4918	433	KITS
34623	57K0220	2540-01-395-8771	402	KITS
19207	57K0221	2540-01-391-7845	209	
19207	57K0222	5340-01-476-7263	433	
19207	57K0223	5340-01-412-0141	KITS	
19207	57K0227	2510-01-274-4234	455	KITS
19207	57K0230	2640-01-359-5643	KITS	
19207	57K0237	2640-01-371-8332	KITS	26
			KITS	260
19207	57K0239	5330-01-361-8013	KITS	
19207	57K0240	5330-01-361-8014	KITS	
19207	57K0241	5330-01-361-8015	KITS	
19207	57K0242	2530-01-361-8012	KITS	
19207	57K0247	2920-01-385-9823	408	KITS
19207	57K0254	2920-01-371-4030	405	KITS
19207	57K0262	2530-01-459-0367	KITS	
34623	57K0264	2530-01-407-3977	KITS	
19207	57K0273	2920-01-465-1096	KIT	
19207	57K0274	2530-01-394-3748	KITS	
19207	57K0297	2640-01-419-6205	KITS	36
19207	57K1640	5340-01-410-7036	453	KITS
19207	57K3196	2540-01-410-7035	454	KITS
19207	57K3197	2540-01-410-7034	454	KITS
34623	57K3205	2530-01-413-8886	KITS	
19207	57K3206	2510-01-431-1339	460	KITS
			460	KITS
19207	57K3209	2540-01-431-9182	459A	KIT
19207	57K3213	2540-01-424-7363	468	
34623	57K3217	2590-01-418-2135	419	KITS
19207	57K3218		511	

CROSS-REFERENCE INDEXES

PART NUMBER INDEX

CAGEC	PART NUMBER	STOCK NUMBER	FIG.	ITEM
19207	57K3219		511	
19207	57K3223	2815-01-410-9710	1	1
19207	57K3226	2815-01-406-6675	1	1
19207	57K3233	2590-01-420-4179	485	KIT
19207	57K3238	5980-01-438-8939	KITS	
19207	57K3488	2590-01-429-3008	486	KIT
19207	57K3490	2510-01-461-7075	462	KIT
34623	57K3492	2540-01-467-8313	464	KIT
34623	57K3495	2540-01-467-8341	464	KIT
19207	57K3496	2540-01-434-8600	317	
19207	57K3499	2540-01-434-8599	323	
19207	57K3500	2540-01-434-8602	319	
19207	57K3501	2540-01-434-8598	321	
19207	57K3502	2520-01-430-5294	KITS	
19207	57K3505	2520-01-469-9893	126	1
19207	57K3506	2520-01-473-5029	126	1
19207	57K3507	2520-01-452-8365	126	1
19207	57K3512	2530-01-455-9330	KITS	
19207	57K3515	2530-01-457-1337	KITS	64
19207	57K3519	2920-01-455-1626	474	
19207	57K3520	2920-01-455-1630	475	
19207	57K3523	2520-01-439-6830	KITS	65
19207	57K3524	2815-01-439-6665	1	1
19207	57K3527	2530-01-443-3405	KITS	
34623	57K3531	2910-01-466-6264	468	
19207	57K3532		KIT	484
19207	57K3534	4130-01-452-8773	466	KIT
19207	57K3536	2815-01-453-7403	1	1
19207	57K3537	2815-01-453-7404	1	1
19207	57K3541	2590-01-456-7879	471A	
19207	57K3542	5340-01-455-8700	402	
			445	1
19207	57K3556		1	1
19207	5703776	2920-00-472-1723	KITS	39
19207	5703776-1	2920-01-222-2183	KITS	40
19207	5704052	2540-00-200-4249	KITS	41
34623	5705606	2530-01-191-8740	KITS	17
			KITS	42
34623	5705611	2540-01-314-0142	397	KITS
19207	5705612	2530-01-321-4497	436	KITS
19207	5705613	2590-01-337-4071	433	KITS
19207	5705615	2540-01-314-9320	381	KITS
19207	5705618	2540-01-300-8745	KITS	43
19207	5705619	2540-01-300-8744	375	21
			KITS	44
19207	5705623	2920-01-378-8035	434	KITS
19207	5705624	5975-01-417-3267	435	KITS
19207	5705628	2815-01-314-7940	1	1
19207	5705684	2815-01-231-3672	1	1
19207	5705687	2920-01-199-2393	404	KITS
19207	5705692	2540-01-199-2390	378	KITS

CROSS-REFERENCE INDEXES

PART NUMBER INDEX

CAGEC	PART NUMBER	STOCK NUMBER	FIG.	ITEM
34623	5705693	2590-01-319-5435	400	KIT
34623	5705698	2540-01-317-0728	366	37
19207	5705703	2540-01-320-8731	401	
			401	KITS
34623	5705704	2540-01-302-2595	432	KITS
34623	5714229	2520-01-413-1902	129	18
34623	5714233	5310-01-416-3009	130	28
34623	5714499	3950-01-435-1632	458	28
34623	5714585	2920-01-461-1065	98	5
34623	5714588	2540-01-463-0200	98	2
34623	5715160	2530-01-449-2495	151	22
34623	5740008	5307-01-174-8640	128	68
			129	7
10988	5740012		129	26
34623	5740013	2520-01-168-7878	128	60
34623	5740017	5330-01-168-3870	128	66
			129	3
34623	5740018	2520-01-189-9750	128	4
34623	5740090	2520-01-178-9768	128	72
34623	5740091	3040-01-176-9584	128	76
34623	5740092	3040-01-177-2427	128	46
34623	5740093	3040-01-177-2428	128	36
34623	5740099	5331-01-174-8618	128	77
34623	5740100	5365-01-174-8185	128	29
34623	5740104	3010-01-176-0557	128	39
34623	5740105	3020-01-148-9548	128	41
34623	5740108	3020-01-175-6477	128	32
34623	5740109	3120-01-155-8713	128	43
34623	5740114	2520-01-162-8985	132	3
			132	7
			132	14
			132	21
34623	5740115	5360-01-174-8613	132	5
34623	5740116		132	8
34623	5740117	3020-01-175-1962	128	75
34623	5740118	3120-01-174-8156	128	78
34623	5740119	2520-01-175-6401	128	13
34623	5740124	5330-01-147-9698	128	16
34623	5740125	2520-01-174-5919	132	11
34623	5740126	5360-01-174-8614	132	10
34623	5740218	3020-01-174-7810	128	79
34623	5740219	5365-01-174-8154	128	28
34623	5740220	3040-01-176-2835	132	9
34623	5740221	2520-01-176-2840	132	12
34623	5740222	2520-01-174-9287	128	26
34623	5740223	2590-01-159-8757	132	2
			132	15
34623	5740225	2520-01-149-4993	128	61
			129	33
34623	5740226		132	4
34623	5740227	2520-01-175-6494	132	1

CROSS-REFERENCE INDEXES

PART NUMBER INDEX

CAGEC	PART NUMBER	STOCK NUMBER	FIG.	ITEM
34623	5740228	5365-01-174-8184	KITS	45
34623	5740229	3110-01-175-3538	KITS	46
34623	5740230	5310-01-174-8158	128	11
			130	22
34623	5740231	3040-01-176-9615	128	53
34623	5740232	2520-01-173-9673	128	58
34623	5740233	2520-01-174-9291	128	5
34623	5740235	3120-01-174-8155	128	33
34623	5740236	3120-01-174-8631	128	34
34623	5740237	3120-01-174-8630	128	35
34623	5740255		138	9
34623	5740256	3040-01-188-3607	145	9
34623	5740257		138	10
			145	10
34623	5740258		138	3
			145	3
			KITS	260
34623	5740279	2520-01-174-9288	128	31
34623	5740321	2530-01-181-3907	100	14
34623	5740429		176	3
34623	5740430		176	2
34623	5740431		176	5
34623	5740432	4320-01-155-5145	176	6
34623	5740433	4820-01-083-7993	176	10
34623	5740436	5331-01-157-1884	176	14
34623	5740442		172	4
34623	5740444	5310-01-038-8500	172	1
34623	5740446		172	2
34623	5740448	2530-01-097-7659	172	3
34623	5740452	5330-01-096-9650	172	19
34623	5740453	3110-00-403-1488	172	20
34623	5740454		172	5
34623	5740456	5340-00-960-9340	172	22
34623	5740458	2530-01-034-1715	172	21
34623	5740462	3040-01-123-4942	172	8
34623	5740464		176	4
34623	5740465	2530-01-033-1855	172	9
34623	5740470	2530-00-937-1275	KITS	320
34623	5740476	3110-01-040-6541	172	7
34623	5740495		172	14
34623	5740497		172	15
34623	5740498		172	16
34623	5740499	2530-00-960-9363	172	13
34623	5740501	3110-01-166-5667	KITS	
34623	5740503	2520-01-206-3875	128	69
34623	5740504	5360-00-735-1126	128	57
34623	5740505	5306-01-174-8492	128	56
34623	5740512	3020-01-177-5441	128	24
			128	48
34623	5740514	2520-01-206-3877	128	9
34623	5740515		128	62

CROSS-REFERENCE INDEXES

PART NUMBER INDEX

CAGEC	PART NUMBER	STOCK NUMBER	FIG.	ITEM
34623	5740517		128	30
34623	5740519		128	3
34623	5740520		128	6
34623	5740521		128	6
34623	5740522		128	6
34623	5740523		128	6
34623	5740524		128	6
34623	5740525		128	6
34623	5740526		128	49
34623	5740549	5365-01-383-1925	138	5
			145	5
34623	5740550	2520-01-189-1636	138	11
			145	11
34623	5740551	3040-01-189-1637	138	7
34623	57405517		145	7
34623	5740552	3040-01-190-3574	138	9
34623	5740702		10	10
34623	5740908		156	8
35623	5740909		156	7
34623	5740910		156	5
34623	5740911		156	6
34623	5740912	5305-01-185-4628	156	2
34623	5740913	5315-01-290-3327	156	10
34623	5740916	5310-01-185-8691	156	12
34623	5740919	5305-01-185-8673	156	15
34623	5741060	2520-01-204-0325	132	6
34623	5741062	5331-01-209-7726	131	3
34623	5741063	2520-01-203-9871	131	4
34623	5741074	5305-01-209-7667	128	12
34623	5741075	5305-01-209-7668	128	17
			130	26
34623	5741076	3110-01-155-2600	128	67
34623	5741077	5365-01-209-7713	128	71
34623	5741083	9905-01-158-7981	357	4
34623	5741084	5305-01-211-7415	357	5
34623	5741093		KITS	48
34623	5741094	3040-01-206-4145	KITS	49
34623	5741095		KITS	50
34623	5741098	5325-01-212-2403	138	6
			145	6
34623	5741120	5342-01-211-5327	45	60
34623	5741141	5330-01-211-1343	156	9
34623	5741145	5310-01-038-8501	172	10
34623	5741221	5330-01-291-4615	BULK	57
34623	5741427	5310-01-272-3311	494	9
			496	6
34623	5741471	5330-01-270-8317	343	7
34623	5741475	5310-01-270-5394	343	22
34623	5741525	2510-01-273-0572	343	8
34623	5741547		138	2
			145	2

CROSS-REFERENCE INDEXES

PART NUMBER INDEX

CAGEC	PART NUMBER	STOCK NUMBER	FIG.	ITEM
34623	5741548		138	4
			145	4
34623	5741611	4710-01-185-6179	10	3
34623	5741613	5340-01-384-9987	4	18
34623	5741746		176	7
34623	5741748	2530-01-265-3153	157	4
34623	5741750	2530-01-265-3148	157	4
34623	5741892	5330-00-843-9235	172	12
			KITS	
34623	5741908	2540-01-289-8330	KITS	51
34623	5741994	5360-01-265-8799	157	3
34623	5741995	5360-01-265-8798	157	3
34623	5742041	2540-01-288-8567	KITS	52
34623	5743156	5355-01-460-4586	98	3
34623	5743159	2920-01-476-2716	98	10
34623	5743744	2520-01-413-1900	129	9
99688	585810	4130-01-171-5997	494	13
99688	58583	4820-01-161-6435	496	10
99688	586230	4520-01-192-6073	343	9
99688	58668	5355-01-167-4114	54	7
99688	58701	9320-01-085-2889	494	21
34623	5903101	5935-01-216-8763	76	9
35510	59234	3110-00-451-1534	406	20
60602	59267-1	5355-01-447-9655	98	4
34623	5933947	5340-01-272-5611	213	38
34623	5933974	5310-01-272-4823	292	9
34623	5933977	5340-01-277-4619	259	2
34623	5934007	5310-00-177-7529	256	4
			257	1
			260	4
34623	5934065	4010-01-266-3842	292	18
34623	5934184	5330-01-265-8805	214	25
34623	5934185	5330-01-265-8804	214	1
34623	5934219	4130-01-278-9837	495	10
34623	5934310		341	6
34623	5934761	5310-01-480-4161	33	8
34623	5935091	5340-01-293-0125	35	18
			42	1
34623	5935092	5340-01-292-8404	37	12
			38	3
			42	1
			475	12
34623	5935093	5340-01-292-5402	42	9
34623	5935102		221	3
34623	5935356	2930-01-317-5358	28	5
34623	5935390	3020-01-364-3398	148	27
34623	5935391		148	28
34623	5935392		148	29
34623	5935394	2520-01-357-5043	136	16
34623	5935425	5340-01-388-9512	KITS	53
34623	5936107	2520-01-357-5056	148	25

CROSS-REFERENCE INDEXES

PART NUMBER INDEX

CAGEC	PART NUMBER	STOCK NUMBER	FIG.	ITEM
34623	5937339	2520-01-357-5044	137	19
34623	5937387	2520-01-356-9197	127	3
34623	5938607	3130-01-360-1051	129	21
			130	36
34623	5938619	3120-01-360-1202	129	12
34623	5938621	3130-01-360-1050	129	15
34623	5938633	5360-01-358-6564	132	26
34623	5938653	3120-01-360-5960	130	46
34623	5938654	3110-01-359-8858	130	45
34623	5938663	3020-01-359-2529	130	43
34623	5938665	5315-01-464-0812	130	24
34623	5938666	4730-01-359-2217	130	14
34623	5938705	6220-01-361-5084	67	8
34623	5939396	2530-01-357-9708	164	1
34623	5939517	5331-01-084-1200	148	16
73331	5939841	5330-00-353-0959	63	10
34623	5982526	5310-01-198-1722	53	5
34623	5993089	5340-01-276-3615	220	7
34623	5995301	5340-01-158-0098	79	4
34623	5995488	5365-01-274-4675	95	38
35510	59982S	5310-00-429-3156	39	44
81343	6-2 010102B	4730-00-439-6021	335	1
78189	6-32 1-4	5305-00-638-0714	43	55
81343	6-4 010103B	4730-00-270-4606	335	16
			336	13
17446	6LC-2R06	5320-00-864-6203	199	48
19207	6TLMFTYI		69	23
19728	6X-4336		45	23
34623	6000300	5340-01-408-5851	16	29
34623	6000329		16	38
34623	6000331		16	37
34623	6000333		16	30
34623	6000334		16	32
34623	6001552	2540-01-473-9045	470	9
34623	6001553	2540-01-473-9040	470	9
34623	6001696	2520-01-409-1602	134	3
34623	6001784	5365-01-456-2032	143	30
			151	30
60602	60018		21	7
34623	6002218	2530-01-420-7904	157	23
			158	13
34623	6002219	5340-01-432-8680	140	9
34623	6002224	5340-01-432-4876	182	12
34623	6002225	5340-01-437-8751	182	12
34623	6002343	5340-01-438-4497	189	10
34623	6002344	5340-01-434-2832	189	7
34623	6002345	5340-01-432-4870	189	5
34623	6002346	5340-01-433-2721	190	5
34623	6002347	2540-01-432-9894	189	8
			190	8
34623	6002348	2540-01-432-9899	189	11

CROSS-REFERENCE INDEXES

PART NUMBER INDEX

CAGEC	PART NUMBER	STOCK NUMBER	FIG.	ITEM
34623	6002607	2520-01-413-0080	136	16
34623	6002629	2520-01-423-5120	136	6
34623	6002771	4710-01-409-2504	125	4
34623	6002779	4710-01-409-2508	125	3
34623	6002942	5307-01-411-2336	103	14
34623	6003057	3040-01-409-2501	134	4
34623	6003083	2990-01-411-2728	24	1
34623	6003175	3040-01-409-2502	101	3
34623	6003666	2520-01-413-2724	137	19
34623	6003868	2530-01-420-3837	170	6
34623	6004838	2530-01-420-5180	170	7
34623	6004839	2530-01-420-3839	170	2
34623	6004872	2510-01-456-2277	194	3
27647	6005	5342-01-205-2519	314	26
34623	6005120	2530-01-433-8003	151	19
34623	6005121	2530-01-433-8702	143	19
			151	35
34623	6005193	5330-01-456-8823	143	20
			151	20
34623	6005790-A	2520-01-413-2595	98	1
34623	6006645	3040-01-422-9390	144	17
			152	17
34623	6007749	2520-01-459-0050	137	19
34623	6007755	2530-01-413-1366	144	8
			152	8
19204	6008993	5305-00-600-8993	324	38
34623	6009349		143	25
34623	6009352	2530-01-413-3653	143	1
			151	1
34623	6009452	3020-01-476-2701	143	38
			151	38
34623	6009453	3020-01-432-2553	143	10
			151	10
34623	6009454	5310-01-473-3373	143	8
			151	8
34623	6009472	5330-01-174-8145	148	14
35510	60198	5330-00-823-4881	406	17
93334	6023054	5310-00-471-9243	131	2
35510	60249	5315-00-069-8996	406	11
35510	60253	5305-00-434-4811	406	1
42280	61-0542-1	5310-00-209-1962	80	16
81834	61-2028-01	5330-01-218-1196	64	7
56442	616G4	5310-00-350-2655	62	6
70082	6185	5307-01-316-2986	329	14
99688	62229	5310-01-161-7308	54	13
81646	62606	4730-00-024-3971	13	10
			14	17
			19	21
70412	62886	5305-01-229-7855	327	3
77060	6288634-L	5940-01-269-8396	95	19
7Z588	63060	4730-01-273-7660	343	11

CROSS-REFERENCE INDEXES

PART NUMBER INDEX

CAGEC	PART NUMBER	STOCK NUMBER	FIG.	ITEM
63829	6320-9620	4320-01-290-0748	491	26
94222	64-10-201-90	5340-01-277-4613	215	7
58132	64046	5305-01-224-1449	286	5
19220	6411-B	5340-00-489-5684	246	1
			246	7
			247	11
			247	22
			248	3
			249	7
			249	15
			249	22
			249	31
			268	40
			270	39
			286	14
			374	3
19220	6411B	5340-00-489-5684	269	8
73342	6437741		104	6
81300	6490610019	4720-01-186-2358	BULK	23
76760	6500318	5306-01-359-4529	129	1
99688	65139	5930-01-165-1657	55	18
99688	65140	5930-01-163-6256	55	7
99688	65158	5905-01-154-2354	498	6
99688	65171	5930-01-190-1231	54	9
68505	66X-3331		45	29
12436	667201-011	5905-00-258-6788	59	12
7Z588	6706	4730-00-024-3971	366	21
78385	6706133		351	11
27647	6779	5310-01-213-4174	314	34
82942	68-412121-1	5330-01-281-6523	BULK	58
			BULK	74
			BULK	77
73342	6884730	5325-01-171-3392	109	5
			111	9
80604	6888	5120-01-437-0480	511	8
60285	6893-2	5306-00-068-0513	379	24
			379	29
70485	698W	5340-00-565-5378	273	12
12361	7-099-000154	5305-00-993-1848	251	31
19220	7-1910	2540-01-270-2250	213	5
			214	33
19220	7-2414	5340-01-270-8435	213	28
			214	18
11083	7N7782	5935-01-150-8322	86	26
11083	7N9738	5935-01-149-5165	76	2
			86	27
81263	7000	2530-01-189-0897	68	9
76445	70112	2510-01-189-1832	193	4
76445	70113	2510-01-190-3862	193	4
76445	70114	2510-01-251-5316	193	4
78385	702903		348	20

CROSS-REFERENCE INDEXES

PART NUMBER INDEX

CAGEC	PART NUMBER	STOCK NUMBER	FIG.	ITEM
78385	703546	5340-01-236-5101	345	32
			348	23
78385	703547	5306-01-351-7742	345	23
			348	22
78385	703611	5305-01-288-1130	349	5
78385	704181		350	9
		2540-01-168-9482	351	9
78385	704190		350	8
			351	8
78385	704191		351	5
78385	704192		351	6
78385	704206	5305-01-097-8178	350	10
78385	704225	2540-00-216-5722	348	18
78385	704363	4710-01-163-2805	345	33
			348	28
19207	7044253	5360-00-704-4253	191	20
78385	704501	9905-01-017-4748	348	10
78385	704678		350	7
			351	7
78385	705032		350	12
78385	705068	5310-01-057-3098	351	3
78385	705117		351	10
78385	705211	5305-01-288-1129	349	7
78385	705237	5310-01-063-8522	351	2
78385	705267	5975-01-288-6594	345	11
78385	705587		350	1
19207	7056640		480	27
78385	705930	5310-01-287-8726	345	13
78385	705944		350	3
78385	706015	9905-01-283-7937	345	17
78385	706025	7690-01-283-7938	345	4
78385	706041	2540-01-290-0715	345	36
78385	706045	5905-01-287-4256	349	11
78385	706049		350	5
78385	706050GV	5310-01-287-6557	349	12
78385	706053	5905-01-287-4255	349	3
78385	706062		350	4
78385	706063		350	6
78385	706070	5940-01-292-6907	345	6
78385	706074	5305-01-290-6290	345	5
78385	706131	5310-01-287-6543	345	27
19207	7063812	5310-00-126-3842	169	7
19207	7064829	5940-00-520-2447	313	18
77335	71-510	5120-00-618-6902	504	14
73680	71X6284	5330-00-497-4633	128	8
35510	71116	2920-00-900-8163	406	16
35510	71117	2920-00-228-3402	406	7
35510	71121	2920-00-114-2942	406	3
35510	71122	5310-01-081-0469	406	2
35510	71125	5365-00-143-9854	406	8
35510	71126	5365-00-165-7862	406	22

CROSS-REFERENCE INDEXES

PART NUMBER INDEX

CAGEC	PART NUMBER	STOCK NUMBER	FIG.	ITEM
35510	71127	2920-00-160-9346	406	12
13008	7168	5340-01-233-1461	240	14
78385	718768-23	5331-00-089-0998	345	21
			348	21
19207	7261674	5935-00-338-2822	282	13
35510	7266	5310-01-272-4831	39	48
19207	7320533	5940-00-549-6583	69	18
19207	7331407	5342-00-678-1753	160	18
19207	7346712	5306-00-182-2027	373	11
19207	7355392	5340-00-408-2432	191	22
19207	7355393		191	21
19207	7355396	5310-00-735-5396	191	24
19207	7355520	5940-00-735-5520	69	36
			474	11
19207	7358626	5330-00-297-6329	47	14
19207	7370134	5315-00-737-0134	403	9
34623	7390378	2540-01-316-2588	393	10
19207	7397780	5340-00-438-1836	477	9
19207	7397934	5340-01-408-7091	261	13
35510	74107	5310-01-270-8415	39	22
19207	7416363	6620-00-993-5546	66	10
7X677	7471009	3110-01-480-5240	107	2
35510	74808	2920-00-114-3370	406	28
30327	75167	4730-00-541-0793	31	1
19207	7524314	2540-00-525-7067	191	13
19207	7527645	5975-00-697-7769	85	12
			86	17
19207	7529300	5365-01-129-0399	271	13
19207	7538146	5305-00-353-0969	62	18
19207	7539072	5330-00-753-9072	67	5
35510	75451	5310-00-429-3453	39	42
35510	75824		406	15
96508	760-2601	5340-01-265-8895	262	6
19207	7700242	5331-00-770-0242	387	15
19207	7700243	5310-00-770-0243	387	16
19207	7716634	5975-00-771-6634	85	17
			86	10
19207	7720442	5310-00-772-0442	36	6
			38	6
			407	3
19207	7721654	5340-00-438-1833	313	4
19207	7722322	5365-00-772-2322	80	9
			84	27
			85	9
			86	5
19207	7722333	5365-00-090-5426	83	36
			85	18
			86	11
19207	7722353	5935-00-772-2353	84	26
			86	23
19204	7723307	5935-00-772-3307	85	14

CROSS-REFERENCE INDEXES

PART NUMBER INDEX

CAGEC	PART NUMBER	STOCK NUMBER	FIG.	ITEM
19204	7723307	5935-00-772-3307	86	19
19207	7723308	5935-00-333-9414	80	10
			84	28
			85	10
			86	6
19207	7723309	5310-00-393-6685	83	37
			85	19
			86	12
19207	7725882	5310-00-167-0822	194	6
16528	7728777	5940-00-983-4067	79	7
			485	1
19207	7728780	5940-01-035-4212	79	9
			485	2
19207	7731428	5935-00-773-1428	83	28
			88	45
19207	7748814	2910-00-073-0165	334	1
03007	7792 LH-02	2540-01-271-5072	237	8
03007	7792RH02	5340-01-272-9103	237	8
35510	77960	3120-01-270-2645	39	18
52788	7817725	2530-01-033-4237	172	11
			KITS	
7X677	7830239	5305-01-162-9713	176	12
7X677	7830913	4320-01-155-5153	176	13
7X677	7834183	6680-01-152-2845	176	1
7X677	7834284	4820-01-191-4262	172	6
35510	78403	2920-01-078-5769	404	5
52788	7848522	5330-01-044-0703	KITS	54
7X677	7849306	2815-01-449-5585	4	6
19207	7951057	2540-00-177-8108	393	14
19207	7951748	5935-00-790-4614	56	11
78462	797ABIFE-1.5 CP6 0		467	8
19207	7973326	9905-00-901-2942	357	7
19207	7982843	5310-01-255-2704	164	2
19207	7982907	5935-00-214-0904	40	26
			86	24
			366	34
			386	1
			472	8
			475	1
			479	6
			483	7
62226	8.6046	2540-01-381-8392	231	1
62226	8.6272-01	2540-01-436-4175	231	6
			454	1
62226	8.6272-02	2540-01-476-9353	454	1
83330	8-1930-0112-912	6210-00-578-7970	311	12
			312	8
19712	8MA-3010AS		43	1
11083	8S4680	5330-00-493-3876	KITS	55
19728	8X-1681		45	22

CROSS-REFERENCE INDEXES

PART NUMBER INDEX

CAGEC	PART NUMBER	STOCK NUMBER	FIG.	ITEM
19728	8X-179		45	59
19728	8X-3439		45	81
19728	8X-349		45	34
19728	8X-4678		45	19
19728	8X-830		45	61
14889	8004-020AA	4710-00-476-5871	BULK	55
18876	8034668-159	5970-00-057-9987	44	25
34623	809223	2590-00-454-3620	93	23
			95	37
			96	30
			303	9
			304	5
			338	2
			339	6
			410	32
			412	13
60703	81087-5	4730-01-074-0060	327	26
19207	8329899	2540-00-040-2129	271	14
13445	83320	5310-01-186-6930	69	9
19207	8338561	5935-00-833-8561	86	25
			366	33
			386	12
			472	7
			475	2
			479	5
			483	8
19207	8338562	5970-00-833-8562	75	13
			76	11
19207	8338564	5940-00-399-6676	75	12
19207	8338566	5935-00-572-9180	483	6
19207	8359764	5365-01-318-2066	388	4
63829	8363-6330	5340-01-288-1242	491	24
19207	8380196	2540-01-023-5116	191	10
63829	8385-0520	5331-01-288-1062	467	4
			491	10
63829	8385-0880		491	17
63829	8385-6410	5365-01-287-8645	491	9
63829	8385-9611	5330-01-288-1307	KITS	56
83385	841-6-32	5310-00-063-7360	345	42
			348	39
60703	846-50	4720-01-164-7803	BULK	16
63829	8476-9631	2815-01-290-3705	491	23
18876	8486066	4730-00-877-6298	178	9
			477	4
13445	85031	5310-01-186-7066	69	7
			473	8
			0070	4
63829	8527-6041	5950-01-289-6007	491	8
27647	8548	5305-01-210-2309	313	19
			458	42
13445	85764	5310-01-185-7188	69	6

CROSS-REFERENCE INDEXES

PART NUMBER INDEX

CAGEC	PART NUMBER	STOCK NUMBER	FIG.	ITEM
13445	85764	5310-01-185-7188	70	5
7X677	8623039	5310-01-152-4229	121	12
7X677	8623078	5315-00-038-3059	121	6
7X677	8623090	5360-01-209-7715	121	13
11862	8623101		109	19
11862	8623102		109	8
		2840-00-001-4903	111	5
11862	8623104	3110-00-005-0873	109	6
			111	8
7X677	8623105	5325-01-171-3392	110	10
			112	9
7X677	8623112	5325-00-007-3052	109	1
			110	1
			111	11
			112	10
7X677	8623116	3110-01-174-8136	109	16
7X677	8623120	5325-01-150-6092	109	13
7X677	8623121		109	18
11862	8623143		113	14
7X677	8623145	5360-01-153-0933	113	8
7X677	8623146	2520-01-150-2280	113	7
7X677	8623149	5325-01-150-7830	113	1
			114	10
7X677	8623151	2520-01-150-7609	113	3
7X677	8623152	2520-01-175-6492	113	2
7X677	8623153	5325-01-158-2182	113	6
			114	4
7X677	8623157	4710-01-151-3663	118	6
7X677	8623174	5330-01-150-5928	116	20
11862	8623183		106	6
			107	4
7X677	8623194		106	24
			107	12
11862	8623196		106	26
			107	10
7X677	8623202	3020-01-149-7938	106	23
7X677	8623204		106	4
			106	20
			107	6
			107	18
11862	8623206		106	22
			107	20
7X677	8623211	3120-01-155-4468	113	9
			114	18
7X677	8623262	2520-01-127-3969	116	17
7X677	8623263	5330-00-001-1984	116	16
7X677	8623292	5340-01-159-1788	121	7
7X677	8623300	3120-01-155-4462	121	17
7X677	8623301	3120-01-155-4463	121	17
7X677	8623302	3120-01-182-8417	121	17
7X677	8623303	3120-01-155-4464	121	17

CROSS-REFERENCE INDEXES

PART NUMBER INDEX

CAGEC	PART NUMBER	STOCK NUMBER	FIG.	ITEM
7X677	8623304	3120-01-155-4465	121	17
7X677	8623305	3120-01-155-4466	121	17
7X677	8623306	3120-01-155-4467	121	17
7X677	8623368	5310-01-149-7793	121	11
7X677	8623430	5330-01-150-6239	116	10
			117	15
7X677	8623437	5325-01-160-4693	106	32
			113	5
			114	5
7X677	8623489	5360-01-150-6086	116	6
			117	5
7X677	8623561	5330-01-152-5942	118	13
7X677	8623592	4820-01-150-4964	118	11
7X677	8623664	5340-01-154-6559	116	22
			117	8
7X677	8623666	5360-01-150-7829	116	23
			117	9
7X677	8623671	5330-01-174-8090	116	12
7X677	8623741	5330-01-151-8364	118	3
7X677	8623744	5310-01-150-5919	116	24
			117	10
7X677	8623849	2520-01-150-3931	112	15
7X677	8623915	5340-01-209-7830	121	14
23862	8623917	5330-01-138-5190	KITS	
			KITS	57
7X677	8623920	3120-01-167-4172	KITS	
			KITS	59
7X677	8623921	3110-01-167-2443	KITS	60
7X677	8623922	3110-01-169-0734	KITS	61
7X677	8623941	3120-01-166-3677	106	29
7X677	8623944	3120-01-156-5189	106	8
			121	5
7X677	8623978	5330-01-152-5941	121	19
7X677	8623983	4820-01-147-4294	100	3
7X677	8624101	5360-01-150-6091	109	7
			111	7
7X677	8624136	5340-01-149-7811	116	21
7X677	8624138	3040-01-151-5663	116	9
			117	16
7X677	8624139	5315-01-152-9038	117	7
7X677	8624140	5315-01-152-9039	116	7
			117	7
7X677	8624141	5315-01-152-9040	116	7
			117	7
7X677	8624196	3120-01-156-8763	111	15
			112	14
7X677	8624209	5340-01-408-8522	114	16
			115	25
7X677	8624256	5360-01-150-6087	116	8
7X677	8624391	5360-01-476-6291	117	6
7X677	8624772	3040-01-149-6706	111	1

CROSS-REFERENCE INDEXES

PART NUMBER INDEX

CAGEC	PART NUMBER	STOCK NUMBER	FIG.	ITEM
7X677	8624781	3120-00-255-5697	111	13
			112	12
7X677	8624784		106	5
			106	21
			107	5
			107	19
7X677	8624908	2520-01-169-7674	111	2
7X677	8625221	5325-01-174-8626	106	19
			107	21
7X677	8625401	3120-01-154-8516	106	30
			107	25
7X677	8625402	3120-01-159-5773	106	30
			107	25
7X677	8625403	3120-01-154-4369	106	30
			107	25
7X677	8625404	3120-01-161-4033	106	30
			107	25
7X677	8625405	3120-01-162-5787	106	30
			107	25
7X677	8625406	3120-01-154-8517	106	30
			107	25
7X677	8625717	3020-01-149-5049	111	14
7X677	8625736	3040-01-167-2836	106	31
7X677	8625773	2520-01-165-9563	100	13
			118	8
7X677	8625955	5340-01-149-1867	121	4
7X677	8625990	2520-01-151-3570	KITS	63
7X677	8626112	5325-01-168-5729	106	12
7X677	8626173	5325-01-150-4982	106	15
			107	23
11862	8626252		100	6
7X677	8626281	5310-01-150-5921	121	20
7X677	8626356	5330-01-165-4333	113	12
			121	18
7X677	8626372	3120-01-154-7174	106	14
			106	28
			107	15
			107	24
7X677	8626423	5330-01-163-2614	116	1
			117	3
11862	8626806		106	9
7X677	8626807	3020-01-149-7941	106	10
			107	8
7X677	8626809	3040-01-150-0407	106	7
11862	8626812		113	11
7X677	8626816	5325-01-154-8562	107	1
11862	8626817		106	25
			107	11
7X677	8626879	5315-01-152-9031	116	4
7X677	8626881	5340-01-151-4964	116	5
7X677	8626884	5310-01-151-4137	116	3

CROSS-REFERENCE INDEXES

PART NUMBER INDEX

CAGEC	PART NUMBER	STOCK NUMBER	FIG.	ITEM
24617	8626916	5330-01-025-4212	121	22
7X677	8626938	2520-01-158-6854	KITS	65
72590	8626982		100	11
7X677	8627130	3020-01-461-0048	107	8
7X677	8627153	5330-01-470-1922	116	14
7X677	8627192	5315-01-174-8644	116	7
			117	7
7X677	8627193	5315-01-174-8645	116	7
			117	7
7X677	8627194	5315-01-174-8646	116	7
			117	7
7X677	8627195	5315-01-174-8647	116	7
			117	7
7X677	8627334		109	14
		2520-01-149-1868	114	3
7X677	8627379		113	15
11862	8627385	2520-01-149-3809	113	16
11862	8627422		109	10
7X677	8627509	4730-01-149-7935	118	5
7X677	8627627	5330-01-155-4383	113	13
73342	8627650	2520-00-557-6619	100	16
7X677	8627657	5325-01-154-8561	106	3
			107	3
72590	8627892		106	13
7X677	8627989	2520-01-163-7213	KITS	66
7X677	8628202		112	1
7X677	8629487	3110-01-155-4438	109	15
7X677	8629523	5365-01-153-0872	104	5
7X677	8629526	4710-01-152-5798	104	14
7X677	8629796	2520-01-154-1185	118	14
7X677	8629955	5330-01-086-5457	KITS	67
7X677	8629961	5365-01-085-0910	121	3
7X677	8629991	3040-01-448-9611	104	2
11862	8633056		106	17
11862	8633059	2520-01-168-1983	106	16
11862	8633075		106	1
7X677	8633173	2520-01-461-0092	114	1
7X677	8633208	5306-01-150-9497	104	13
7X677	8637742	4730-01-163-7163	105	3
7X677	8639718	4820-01-212-6763	121	10
7X677	8639743	5305-01-150-9781	4	25
7X677	8648178	5310-01-447-0968	108	3
29930	865168R91	3110-00-436-3248	128	50
7X677	8653985	3120-01-158-6304	106	18
7X677	8654701		105	16
7X677	8654716	5330-01-324-0906	121	2
			122	6
72590	8655027	2520-01-160-9570	118	7
72590	8655036	2520-01-212-7634	104	9
11862	8655037		104	10
7X677	8655186	4730-01-177-7501	104	23

CROSS-REFERENCE INDEXES

PART NUMBER INDEX

CAGEC	PART NUMBER	STOCK NUMBER	FIG.	ITEM
7X677	8655280	5306-01-269-4319	121	21
7X677	8655625	5330-01-148-7492	104	7
7X677	8656613	5330-01-397-0374	105	14
7X677	8656942	2520-01-164-7234	102	1
7X677	8657163	5330-01-251-1607	100	10
			108	7
73342	8658110	5330-01-043-5572	100	2
			100	5
7X677	8661271		115	23
7X677	8661449		115	17
7X677	8661568	5325-01-408-7971	115	8
7X677	8661569	2520-01-409-1767	115	19
7X677	8661571	2520-01-409-1758	115	18
7X677	8661572	5325-01-408-7970	115	16
7X677	8661577	2520-01-410-8241	115	27
7X677	8661578	5325-01-461-7157	115	28
7X677	8661579	2520-01-411-3959	115	21
7X677	8661582	2520-01-409-1751	115	9
7X677	8661598	3040-01-410-8071	107	22
7X677	8661602	5330-01-379-1139	122	4
7X677	8661613	3040-01-410-8068	107	13
7X677	8661623	2520-01-461-0083	115	13
7X677	8661629	2520-01-461-0085	115	7
7X677	8661639	5330-01-470-6543	120	4
7X677	8661647		120	6
7X677	8661658		114	12
11862	8661682		122	7
7X677	8661683		122	8
7X677	8661692	5315-01-460-9907	108	11
7X677	8661693	3040-01-460-9964	108	13
7X677	8661708	3040-01-447-3797	107	7
7X677	8661709	4330-01-411-2786	119	17
7X677	8661760	5330-01-414-6607	122	2
7X677	8661762	5306-01-461-3557	105	12
7X677	8661764	2520-01-461-0099	110	9
			112	8
7X677	8661766	4810-01-460-9975	122	16
7X677	8661767	5360-01-408-7977	122	15
7X677	8661768	5315-01-461-5649	122	14
7X677	8661789	5331-01-462-7294	122	32
7X677	8661792	5306-01-411-1596	122	1
7X677	8661798	5360-01-460-9070	122	23
7X677	8661801		119	4
7X677	8661804		119	12
7X677	8661805		119	14
11862	8661807		119	21
7X677	8661821		119	16
7X677	8661822		119	19
7X677	8661829		120	25
7X677	8661834	2520-01-461-2374	105	22
7X677	8661837		112	11

CROSS-REFERENCE INDEXES

PART NUMBER INDEX

CAGEC	PART NUMBER	STOCK NUMBER	FIG.	ITEM
7X677	8661838	5315-01-461-8374	122	10
7X677	8661867		119	18
7X677	8661871		119	25
7X677	8661873		119	15
7X677	8661890		117	14
7X677	8661891	5360-01-460-9069	119	3
7X677	8661893	5330-01-460-8987	115	4
24617	8661894	5330-01-468-3604	115	1
7X677	8665830		105	16
7X677	8670200	2520-01-163-7866	109	11
			111	6
7X677	8670201	2520-01-192-1260	109	9
7X677	8670393	5330-01-151-6106	118	1
7X677	8675508		112	7
61928	8675511	2520-01-413-5540	110	8
7X677	8675517	5330-01-460-8988	105	7
7X677	8675519	2520-01-461-0073	114	9
7X677	8675520		114	2
7X677	8675521	2520-01-479-0847	114	8
7X677	8675522	2520-01-461-0074	114	7
7X677	8675523	5325-01-408-7969	115	11
7X677	8675524	5325-01-460-9908	105	8
7X677	8675533	5306-01-469-9903	120	3
7X677	8675535		119	9
7X677	8675537		120	17
7X677	8675538		120	19
7X677	8675539	5340-01-447-5839	78	3
7X677	8675557	2520-01-461-0076	110	2
7X677	8675558	5340-01-476-0352	110	14
7X677	8675578	2520-01-212-6642	109	12
7X677	8675611	3040-01-480-7536	107	14
7X677	8675612	2520-01-461-0107	107	14
7X677	8675634	5360-01-469-8077	120	22
7X677	8675728	5330-01-478-4797	117	18
7X677	8675729	5330-01-409-1664	114	15
7X677	8676000		117	20
7X677	8676074		119	20
7X677	8676222	5306-01-476-3501	120	14
7X677	8676418	5340-01-474-4002	120	21
7X677	8677091	3020-01-479-2069	112	13
24617	8677483		110	6
7X677	8677571	3120-01-461-6679	122	31
7X677	8677572	3120-01-471-7844	122	31
7X677	8677573	3120-01-411-5783	122	31
7X677	8677574	3120-01-411-5787	122	31
7X677	8677575	3120-01-461-6677	122	31
7X677	8677582		110	7
			112	4
7X677	8677583		112	6
7X677	8677743	5330-01-360-5271	105	17
7X677	8677782	5330-01-409-1665	122	30

CROSS-REFERENCE INDEXES

PART NUMBER INDEX

CAGEC	PART NUMBER	STOCK NUMBER	FIG.	ITEM
7X677	8677887	5325-01-408-7972	115	10
7X677	8678122	5315-01-408-8020	108	8
7X677	8678257	4820-01-460-9991	122	13
7X677	8678258	5360-01-460-9068	122	12
7X677	8678292		117	13
7X677	8678294		117	11
7X677	8678337	4820-01-409-1218	119	22
7X677	8678347	5315-01-447-0492	108	4
7X677	8678523	5340-01-460-8364	119	27
7X677	8678537	3040-01-149-6759	116	2
7X677	8679439	5325-01-412-8806	115	12
7X677	8679465	5325-01-477-6608	122	22
7X677	8679940	2520-01-150-2279	111	10
7X677	8679960	3040-01-266-2122	109	17
7X677	8679975	2520-01-151-3857	116	15
72590	8679988	4320-01-149-1866	121	1
7X677	8679990	2520-01-164-7158	100	9
7X677	8680547	4820-01-460-8288	122	24
7X677	8680548	3120-01-461-6680	122	19
7X677	8680549	4820-01-461-0011	122	20
7X677	8680551	5360-01-460-9073	122	18
61928	8680816	2520-01-392-8435	110	11
			112	17
7X677	8680914	3120-01-174-8153	113	10
			KITS	69
7X677	8680915	2520-01-410-8077	KITS	70
7X677	8680918	2520-01-410-8079	115	5
			KITS	71
7X677	8680929	2520-01-164-7157	116	11
			KITS	64
72590	8680938	2520-01-168-2060	113	4
7X677	8681069	5360-01-460-9072	122	28
7X677	8681070	4820-01-460-9988	122	27
11862	8681620	2530-01-159-2732	106	27
7X677	8681899		119	26
11862	8682194		122	5
			122	5
7X677	8682215	5340-01-479-2514	117	18
7X677	8682802	2520-01-439-5265	115	20
7X677	8682855	2520-01-461-5133	122	25
7X677	8682856	5340-01-460-8361	122	21
7X677	8682857	2520-01-461-5648	122	29
7X677	8682858	5340-01-477-7052	122	11
7X677	8682888		105	18
7X677	8683075		114	17
61928	8683088	2520-01-444-2711	120	5
7X677	8683188	5950-01-399-0257	119	28
7X677	8683771	3020-01-480-7311	107	17
7X677	8684205		120	8
7X677	8684213		119	31
7X677	8684214		119	30

CROSS-REFERENCE INDEXES

PART NUMBER INDEX

CAGEC	PART NUMBER	STOCK NUMBER	FIG.	ITEM
7X677	8684215	5340-01-460-8363	119	29
7X677	8684217	5340-01-460-8362	119	23
7X677	8684218		119	1
7X677	8684220	2520-01-409-2509	120	1
7X677	8684221	2520-01-398-4589	105	15
7X677	8685472		117	4
7X677	8685473		117	1
7X677	8685474		117	2
7X677	8685921	2520-01-481-8344	KITS	
7X677	8686122		115	24
19207	8689221	5940-01-170-4956	41	4
			41	14
			313	15
			474	11
19207	8701325	5310-00-655-9860	80	8
			85	8
			86	4
19207	8712289	5310-00-044-3340	40	7
19207	8712289-4	5310-00-840-6222	169	14
19204	8712289-5	5310-00-044-3342	180	17
19207	8724258	5935-00-686-2599	85	16
			86	9
11862	8727200		116	13
19207	8741435	5310-00-241-6921	62	20
19207	8741437	5305-00-832-5743	62	15
19207	8741442	5325-00-088-6147	62	23
19207	8741446	5325-00-832-5650	62	16
19207	8741447	6220-00-998-6142	62	19
19207	8741461	6220-00-443-0589	62	21
19207	8741491	6240-00-966-3831	62	17
19207	8741492	5935-00-807-4109	62	22
			366	31
			386	9
			469	10
			483	1
19207	8754124	5325-01-144-4871	68	8
19207	8754125	5930-01-153-8215	68	10
27647	8762	5310-01-138-2605	314	23
27647	8763	5305-01-210-6248	314	21
13445	88587	5310-01-185-7208	69	8
			70	3
72582	8924145	4730-00-803-6266	334	11
39428	8930T31	4010-00-929-0041	BULK	54
			BULK	67
			BULK	68
41885	89305		167	1
41885	89321	2530-01-161-0005	167	8
41885	89322	2530-01-161-0006	167	2
41885	89324	5305-01-205-6048	167	9
41885	89325	5310-01-212-2215	167	6
76760	89331A	5325-01-358-7960	129	20

CROSS-REFERENCE INDEXES

PART NUMBER INDEX

CAGEC	PART NUMBER	STOCK NUMBER	FIG.	ITEM
52170	898 3/4 IN.	7510-00-802-8311	BULK	92
			BULK	93
19220	9-300-U-L	2540-01-197-4900	281	22
			281	22
19220	9-300-U-R	2540-01-196-5317	280	22
0TA44	9-46948	5120-01-373-4981	507	5
27182	90-SN	5340-01-271-6361	215	5
68505	90-2187	2920-01-168-4128	KITS	74
68505	90-2188	5310-01-027-9392	KITS	75
68505	90-2206	2920-00-302-6342	KITS	76
68505	90-2225	2920-01-068-7182	KITS	77
68505	90-2531	2920-01-168-4129	KITS	78
68505	90-2532	2920-01-168-4130	KITS	79
68505	90-2836	5305-01-188-9707	KITS	80
68505	90-2837	2920-01-192-2956	KITS	81
68505	90-2838	2920-01-192-4473	KITS	82
19728	90-2840	3120-01-191-4637	KITS	83
68505	90-2841	2920-01-191-6534	KITS	84
68505	90-816	2920-01-192-2959	KITS	85
51377	9002-00181-48	5331-01-194-8966	34	10
51377	9002-00741-58	5331-01-195-1500	34	9
19207	900529	3110-00-108-9247	458	35
78500	902-04-48-244	2520-01-214-2565	169	17
81834	90221	6220-00-001-1514	64	8
41885	90297	5306-01-336-7175	167	15
09094	903C4-16	5315-00-973-8637	245	11
73342	907425	3110-00-155-6152	128	14
13940	91-BS-78403	5325-00-281-8643	316	5
			319	2
			322	2
			324	2
63829	9103-9800	2520-01-289-3617	KITS	86
39428	91248A721	5305-00-719-5240	191	12
95019	913359-1528	2520-01-171-8258	137	4
76760	91386	5315-00-576-0265	132	30
63829	9140-9810	2520-01-290-3921	KITS	87
95019	914201-2626	2520-01-200-3096	136	16
95019	914202-1524	2520-01-200-3097	136	6
K1076	9145-105-00B	5310-01-127-2456	100	7
			173	1
95019	915051-1624	2520-01-346-1374	137	4
73165	91598		4	29
41885	91610	5331-01-417-1043	167	16
63829	9162-0121		491	4
68505	92-2923	5310-01-214-4955	45	50
0VDA9	922-621-02	6220-01-269-5263	65	3
0VDA9	922-720-11	6220-01-266-1651	65	24
			65	24
0VDA9	922-721-00	6230-01-269-8054	65	22
			289	28
0VDA9	922-925-10	6250-01-339-6271	65	11

CROSS-REFERENCE INDEXES

PART NUMBER INDEX

CAGEC	PART NUMBER	STOCK NUMBER	FIG.	ITEM
0VDA9	922-929-00	6220-01-338-2059	65	9
7X677	930678	3110-01-411-5784	115	15
7X677	930679	2520-01-149-1221	106	2
			107	2
34623	934245	4730-00-954-1251	18	5
63829	9383-6010	2520-01-289-9663	491	1
7X677	9411030	4730-00-050-4205	170	5
27387	941180	2530-01-186-3740	195	10
24617	9411807	5310-01-461-8043	227	48
24617	9411893	5310-00-251-4503	234	17
			254	4
			254	12
			260	16
			416	11
			486	3
24617	9412281	5315-01-173-3397	277	19
			277	46
7X677	9413349	5325-01-408-7973	120	2
24617	9413509	5310-00-768-0318	69	1
7X677	9413523	5340-01-479-2517	117	17
24617	9413553	5310-01-317-4022	391	6
24617	9413583	5310-01-381-5328	231	24
			454	4
7X677	9414224	5305-01-211-1439	47	3
24617	9414241	5305-01-361-5353	225	52
			306	8
			346	5
			410	23
24617	9414295	5305-01-433-9248	366	6
24617	9414313	5305-01-380-9163	333	14
86403	9414722	5305-01-213-5024	332	17
24617	9414726	5305-01-447-9227	332	31
24617	9415477	5305-00-489-0743	77	18
			88	14
			88	28
			457	16
7X677	9415560	5306-01-186-5369	188	27
54132	9415779	5305-01-120-4363	388	8
7X677	9415786	5305-01-187-9555	73	7
7X677	9415857	5305-01-211-1450	13	4
			14	4
			16	23
24617	9416128	5310-00-402-2778	51	12
24617	9416402	5305-01-456-6358	314	40
24617	9416918	5310-01-012-8962	24	9
			393	4
24617	9417028	5310-01-457-3171	36	9
			38	9
			472	20
			475	18
24617	9417323	5305-01-474-0988	469	4

CROSS-REFERENCE INDEXES

PART NUMBER INDEX

CAGEC	PART NUMBER	STOCK NUMBER	FIG.	ITEM
24617	9417373	5310-01-361-1163	439	7
			462	8
			465	1
			485	25
24617	9417497		227	44
24617	9417714	5310-01-217-5205	203	30
			486	2
7X677	9417793	5310-01-211-3811	24	19
			25	6
			175	5
24617	9417901	4730-00-050-4203	170	4
24617	9418304	5310-01-119-3675	7	2
24617	9418346	5305-00-179-8946	89	13
			91	10
			93	21
			94	8
			95	36
24617	9418753	5310-01-465-4525	33	7
			512	4
16764	9418913	5305-00-841-2044	72	14
24617	9418924	5310-01-132-8275	12	12
24617	9418969	5310-00-458-2382	462	4
34623	9419011	5306-01-266-8274	202	28
24617	9419032	5306-01-158-6224	7	1
7X677	9419079	5305-01-211-7478	170	15
			195	4
7X677	9419143	5310-01-148-0240	68	4
24617	9419265	5310-01-170-8765	411	18
7X677	9419293	5306-01-185-7052	137	16
			239	11
7X677	9419343	5306-01-197-3274	150	27
24617	9419456	5310-01-318-5237	389	4
24617	9419471	5310-01-432-6727	153	3
			155	14
			198	10
			208	4
			227	31
			261	11
			321	15
			325	17
			326	12
			332	2
			377	8
			486	4
			487	10
24617	9419476	5310-00-984-3807	199	9
			324	9
			325	25
			325	26
24617	9419477	5310-01-466-4852	462	10
24617	9419482	5310-01-409-0897	462	14

CROSS-REFERENCE INDEXES

PART NUMBER INDEX

CAGEC	PART NUMBER	STOCK NUMBER	FIG.	ITEM
24617	9419507		188	28
24617	9419836	5305-01-215-3985	43	32
24617	9420022	5310-00-809-4085	456	16
			462	11
			472	11
24617	9421073	5305-01-162-8512	12	2
24617	9421077	5310-01-102-7356	154	1
7X677	9421294	5305-01-185-8674	240	4
			240	18
			240	22
			269	6
7X677	9421394	5310-01-199-2293	227	32
			377	2
24617	9421705	5305-01-381-2296	231	11
7X677	9422042	5306-01-207-7487	374	7
24617	9422277	5310-01-126-9404	329	12
24617	9422295	5310-01-119-3668	231	7
24617	9422299	5310-01-150-4003	127	8
			136	3
			152	14
			271	12
			271	27
			398	8
			464	8
24617	9422300	5310-01-315-3403	402	10
7X677	9422302	5310-01-184-5784	194	2
24617	9422303	5310-00-044-3342	166	5
24617	9422305	5310-01-130-4274	196	7
7X677	9422306	5310-00-198-6691	437	5
7X677	9422771	5310-01-211-0691	439	10
7X677	9423534	5310-01-213-4192	205	15
			250	15
24617	9423557	5306-01-360-1123	283	17
			438	16
7X677	9423869	5310-01-186-1245	197	34
24617	9423995	5305-00-719-5235	437	12
7X677	9424258	5310-01-199-3440	209	4
			225	40
7X677	9424760	5306-01-255-2661	193	7
7X677	9425078	5305-01-210-6251	15	33
3M915	9425170	5305-01-461-4396	332	38
7X677	9427162	5306-01-186-7128	181	14
24617	9427321	5305-01-104-4846	187	8
7X677	9427812	5305-01-255-0094	185	2
24617	9428039	5305-01-111-2774	187	2
7X677	9428747	5305-01-204-4190	275	17
			276	16
7X677	9428795	5305-01-197-9417	463	14
7X677	9428839	5310-01-408-9593	127	6
7X677	9428851	5310-01-250-7835	26	10
7X677	9429048	5310-01-209-7702	225	39

CROSS-REFERENCE INDEXES

PART NUMBER INDEX

CAGEC	PART NUMBER	STOCK NUMBER	FIG.	ITEM
7X677	9429048	5310-01-209-7702	231	21
24617	9429395		186	9
			188	18
			188	34
24617	9430516	5305-01-411-4455	453	16
24617	9430677	5306-01-130-0457	463	8
7X677	9430724	5305-01-198-3440	463	7
7X677	9430761	5305-01-213-4149	171	5
7X677	9434068		128	27
7X677	9437889	5305-01-195-1575	69	3
7X677	9438257	4720-01-155-7784	BULK	27
7X677	9438306		BULK	17
7X677	94383154-3		385	3
7X677	9438373	4720-01-159-5796	BULK	26
7X677	9439046	4720-01-156-0549	BULK	12
11862	9439363		11	3
7X677	9439402		BULK	11
7X677	9440949		BULK	7
72582	9442899	5310-01-135-4730	131	1
24617	9442900		26	13
24617	9442938	5310-01-315-3403	234	10
			235	13
			239	7
92867	95001418	5340-01-213-5600	153	9
92867	95001419	5340-01-211-7562	153	23
35510	95467	5970-01-269-8384	39	14
35510	95469	5306-01-272-4798	39	24
35510	95483	5330-01-272-9071	39	17
35510	95484	5307-01-272-7539	39	54
35510	95498	5330-01-270-3668	39	26
35510	95504	5305-01-282-2667	39	31
35510	95510	3130-01-271-6464	39	3
35510	95513	5330-01-272-5474	39	2
24975	95515	5977-01-270-1468	39	72
35510	95516	5365-01-272-2663	39	73
35510	95552	5340-01-272-5516	39	5
35510	95605	5310-01-270-8377	39	13
35510	95962	2920-01-251-5488	406	14
35510	95965	5970-01-260-9132	39	75
35510	95972	6115-01-269-7911	39	21
76599	96HSS	4730-00-908-6294	27	1
			337	26
			343	3
35510	96154	6150-01-269-1855	39	38
35510	96156	6150-01-269-1858	39	64
35510	96158	6150-01-269-1854	39	65
35510	96160	6150-01-269-1856	39	40
35510	96162	6150-01-269-1863	39	51
35510	96171	3120-01-271-6432	39	59
35510	96172	5330-01-270-8316	39	67
35510	96180	5365-01-272-4877	39	50

CROSS-REFERENCE INDEXES

PART NUMBER INDEX

CAGEC	PART NUMBER	STOCK NUMBER	FIG.	ITEM
35510	96187	5970-01-270-1467	39	60
35510	96188	5920-01-266-3908	39	62
35510	96247		39	39
35510	96259	5970-01-270-1465	39	27
70485	963	5325-01-195-8002	71	6
80252	9630	2590-00-683-0598	68	5
35510	96309	5315-01-333-5117	404	12
35510	96377	3040-01-271-3823	39	41
35510	96470	5305-01-254-2511	406	29
35510	96471	5970-01-253-5134	406	32
35510	96520	2920-01-310-9978	39	16
35510	96745	5365-01-272-7502	39	15
35510	96756	6130-01-309-6458	39	53
35510	96764	3110-01-271-6355	39	20
35510	96768	5330-01-272-8337	39	71
35510	96769	5340-01-273-6944	39	70
35510	96846		39	19
27647	980074 5553	5305-01-210-4967	314	25
0GZB7	983-60-50085-A	3940-01-475-4983	469	9
0GZB7	983-60-50089	5340-01-475-3650	469	8
0GZB7	983-74-1001	6150-01-475-8835	469	6
0GZB7	983-75-50050CVB	2590-01-474-3326	471	2
0GZB7	983-88-00C36	4720-01-475-3757	470	1
0GZB7	983-88-00C47	4720-01-475-4641	470	2
0GZB7	983-90-50201	4710-01-475-3753	469	7
0GZB7	983-92-52000		470	15
			471	7
7X677	99088C		129	11
35510	99479	5977-01-143-6996	39	68
35510	99514	5330-01-145-5376	39	69
41024	99890451	2510-01-189-3459	324	10

By Order of the Secretary of the Army:

ERIC K. SHINSEKI
General, United States Army
Chief of Staff

Official:

JOEL B. HUDSON
Administrative Assistant to the
Secretary of the Army
05696

By Order of the Secretary of the Air Force:

RONALD R. FOGLEMAN
General, United States Air Force
Chief of Staff

Official:

HENRY VICCELLIO, JR.
General, United States Air Force
Commander, Air Force Materiel Command

Distribution:

To be distributed in accordance with the initial distribution number (IDN) 381008, requirements for TM 9-2320-280-24P-2.

RECOMMENDED CHANGES TO EQUIPMENT TECHNICAL PUBLICATIONS

SOMETHING WRONG WITH THIS PUBLICATION?

THEN . . . JOT DOWN THE DOPE ABOUT IT ON THIS FORM. CAREFULLY TEAR IT OUT. FOLD IT AND DROP IT IN THE MAIL!

FROM: (PRINT YOUR UNIT'S COMPLETE ADDRESS)
Your Mailing Address

DATE SENT
Date You Filled Out This Form

PUBLICATION NUMBER	PUBLICATION DATE	PUBLICATION TITLE
TM 9-2320-280-24P-2	30 March 2001	Unit, Direct and General Support Maintenance Repair Parts and Special Tools List

BE EXACT. . .PIN-POINT WHERE IT IS

PAGE NO.	PARA-GRAPH	FIGURE NO.	TABLE NO.
364-1		364	

IN THIS SPACE TELL WHAT IS WRONG AND WHAT SHOULD BE DONE ABOUT IT:

Item No. 9 CAGE 34621 Should read 34623.

SAMPLE

PRINTED NAME, GRADE OR TITLE, AND TELEPHONE NUMBERS
Your Name, Rank, and Phone Number

SIGN HERE:
PFC John Doe

DA FORM 1 JUL 79 2028-2

PREVIOUS EDITIONS ARE OBSOLETE.

P.S.—IF YOUR OUTFIT WANTS TO KNOW ABOUT YOUR RECOMMENDATION MAKE A CARBON COPY OF THIS AND GIVE IT TO YOUR HEADQUARTERS.

REVERSE OF DA FORM 2028-2

SAMPLE

FILL IN YOUR
UNIT'S ADDRESS

FOLD BACK

TEAR ALONG PERFORATED LINE

DEPARTMENT OF THE ARMY

AMSTA-LC-CI/TECH PUBS, TACOM-RI
1 ROCK ISLAND ARSENAL
ROCK ISLAND, IL 61299-7630

RECOMMENDED CHANGES TO EQUIPMENT TECHNICAL PUBLICATIONS

SOMETHING WRONG WITH THIS PUBLICATION?

THEN . . . JOT DOWN THE DOPE ABOUT IT ON THIS FORM. CAREFULLY TEAR IT OUT. FOLD IT AND DROP IT IN THE MAIL!

FROM: (PRINT YOUR UNIT'S COMPLETE ADDRESS)

DATE SENT

PUBLICATION NUMBER	PUBLICATION DATE	PUBLICATION TITLE
TM 9-2320-280-24P-2	30 March 2001	Unit, Direct and General Support Maintenance Repair Parts and Special Tools List

BE EXACT. . .PIN-POINT WHERE IT IS

PAGE NO.	PARA-GRAPH	FIGURE NO.	TABLE NO.

IN THIS SPACE TELL WHAT IS WRONG AND WHAT SHOULD BE DONE ABOUT IT:

PRINTED NAME, GRADE OR TITLE, AND TELEPHONE NUMBERS

SIGN HERE:

DA FORM 1 JUL 79 2028-2

PREVIOUS EDITIONS ARE OBSOLETE.

P.S.—IF YOUR OUTFIT WANTS TO KNOW ABOUT YOUR RECOMMENDATION MAKE A CARBON COPY OF THIS AND GIVE IT TO YOUR HEADQUARTERS.

REVERSE OF DA FORM 2028-2

FILL IN YOUR
UNIT'S ADDRESS

FOLD BACK

TEAR ALONG PERFORATED LINE

DEPARTMENT OF THE ARMY

AMSTA-LC-CI/TECH PUBS, TACOM-RI
1 ROCK ISLAND ARSENAL
ROCK ISLAND, IL 61299-7630

RECOMMENDED CHANGES TO EQUIPMENT TECHNICAL PUBLICATIONS

SOMETHING WRONG WITH THIS PUBLICATION?

THEN . . . JOT DOWN THE DOPE ABOUT IT ON THIS FORM. CAREFULLY TEAR IT OUT. FOLD IT AND DROP IT IN THE MAIL!

FROM: (PRINT YOUR UNIT'S COMPLETE ADDRESS)

DATE SENT

PUBLICATION NUMBER	PUBLICATION DATE	PUBLICATION TITLE
TM 9-2320-280-24P-2	30 March 2001	Unit, Direct and General Support Maintenance Repair Parts and Special Tools List

BE EXACT. . .PIN-POINT WHERE IT IS

PAGE NO.	PARA-GRAPH	FIGURE NO.	TABLE NO.

IN THIS SPACE TELL WHAT IS WRONG AND WHAT SHOULD BE DONE ABOUT IT:

PRINTED NAME, GRADE OR TITLE, AND TELEPHONE NUMBERS

SIGN HERE:

DA FORM 1 JUL 79 2028-2

PREVIOUS EDITIONS ARE OBSOLETE.

P.S.—IF YOUR OUTFIT WANTS TO KNOW ABOUT YOUR RECOMMENDATION MAKE A CARBON COPY OF THIS AND GIVE IT TO YOUR HEADQUARTERS.

REVERSE OF DA FORM 2028-2

FILL IN YOUR
UNIT'S ADDRESS

FOLD BACK

TEAR ALONG PERFORATED LINE

DEPARTMENT OF THE ARMY

AMSTA-LC-CI/TECH PUBS, TACOM-RI
1 ROCK ISLAND ARSENAL
ROCK ISLAND, IL 61299-7630

RECOMMENDED CHANGES TO EQUIPMENT TECHNICAL PUBLICATIONS

SOMETHING WRONG WITH THIS PUBLICATION?

THEN . . . JOT DOWN THE DOPE ABOUT IT ON THIS FORM. CAREFULLY TEAR IT OUT. FOLD IT AND DROP IT IN THE MAIL!

FROM: (PRINT YOUR UNIT'S COMPLETE ADDRESS)

DATE SENT

PUBLICATION NUMBER	PUBLICATION DATE	PUBLICATION TITLE
TM 9-2320-280-24P-2	30 March 2001	Unit, Direct and General Support Maintenance Repair Parts and Special Tools List

BE EXACT. . .PIN-POINT WHERE IT IS

PAGE NO.	PARA-GRAPH	FIGURE NO.	TABLE NO.

IN THIS SPACE TELL WHAT IS WRONG AND WHAT SHOULD BE DONE ABOUT IT:

PRINTED NAME, GRADE OR TITLE, AND TELEPHONE NUMBERS

SIGN HERE:

DA FORM 1 JUL 79 2028-2

PREVIOUS EDITIONS ARE OBSOLETE.

P.S.—IF YOUR OUTFIT WANTS TO KNOW ABOUT YOUR RECOMMENDATION MAKE A CARBON COPY OF THIS AND GIVE IT TO YOUR HEADQUARTERS.

REVERSE OF DA FORM 2028-2

FILL IN YOUR
UNIT'S ADDRESS

FOLD BACK

TEAR ALONG PERFORATED LINE

DEPARTMENT OF THE ARMY

AMSTA-LC-CI/TECH PUBS, TACOM-RI
1 ROCK ISLAND ARSENAL
ROCK ISLAND, IL 61299-7630