ARMY TM 9-2320-280-10
AIR FORCE TO 36A12-1A-2091-1
MARINE CORPS TM 2320-10/6B

(SUPERSEDES TM 9-2320-280-10, 18 JUNE 1991)

OPERATOR'S MANUAL
FOR

TRUCK, UTILITY: CARGO/TROOP CARRIER, 1-1/4 TON, 4X4, M998 (2320-01-107-7155) (EIC: BBD); M998A1 (2320-01-371-9577) (EIC: BBN);

TRUCK, UTILITY: CARGO/TROOP CARRIER, 1-1/4 TON, 4X4, W/WINCH, M1038 (2320-01-107-7156) (EIC: BBE); M1038A1 (2320-01-371-9578) (EIC: BBP);

TRUCK, UTILITY: HEAVY VARIANT, 4X4, M1097 (2320-01-346-9317) (EIC: BBM); M1097A1 (2320-01-371-9583) (EIC: BBU); M1097A2 (2320-01-380-8604) (EIC: BB6); M1123 (2320-01-455-9593) (EIC: B6G);

TRUCK, UTILITY: TOW CARRIER, ARMORED, 1-1/4 TON, 4X4, M966 (2320-01-107-7153) (EIC: BBC); M966A1 (2320-01-372-3932) (EIC: BBX); M1121 (2320-01-956-1282) (EIC: B6H);

TRUCK, UTILITY: TOW CARRIER, ARMORED, 1-1/4 TON, 4X4, W/WINCH, M1036 (2320-01-107-7154) (EIC: BBH);
TRUCK, UTILITY: TOW CARRIER, W/SUPPLEMENTAL ARMOR, 1-1/4 TON, 4X4, M1045 (2320-01-146-7191); M1045A1 (2320-01-371-9580) (EIC: BBR); M1045A2 (2320-01-380-8229) (EIC: BB5);

TRUCK, UTILITY: TOW CARRIER, W/SUPPLEMENTAL ARMOR, 1-1/4 TON, 4X4, W/WINCH, M1046 (2320-01-146-7188); M1046A1 (2320-01-371-9582) (EIC: BBT);

TRUCK, UTILITY: ARMAMENT CARRIER, ARMORED, 1-1/4 TON, 4X4, M1025 (2320-01-128-9551) (EIC: BBF); M1025A1 (2320-01-371-9584) (EIC: BBV); M1025A2 (2320-01-380-8233) (EIC: BB3);

TRUCK, UTILITY: ARMAMENT CARRIER, ARMORED, 1-1/4 TON, 4X4, W/WINCH, M1026 (2320-01-128-9552) (EIC: BBG); M1026A1 (2320-01-371-9579) (EIC: BBQ);

TRUCK, UTILITY: ARMAMENT CARRIER, W/SUPPLEMENTAL ARMOR, 1-1/4 TON, 4X4, M1043 (2320-01-146-7190); M1043A1 (2320-01-372-3933) (EIC: BBY); M1043A2 (2320-01-380-8213) (EIC: BB4);

TRUCK, UTILITY: ARMAMENT CARRIER, W/SUPPLEMENTAL ARMOR, 1-1/4 TON, 4X4, W/WINCH, M1044 (2320-01-146-7189); M1044A1 (2320-01-371-9581) (EIC: BBS);

TRUCK, UTILITY: S250 SHELTER CARRIER, 4X4, M1037 (2320-01-146-7193) (EIC: BBK);

TRUCK, UTILITY: S250 SHELTER CARRIER, 4X4, W/WINCH, M1042 (2320-01-146-7187);

TRUCK, AMBULANCE, 2-LITTER, ARMORED, 4X4, M996 (2310-01-111-2275) (EIC: BBB); M996A1 (2310-01-372-3935) (EIC: BB2);

TRUCK, AMBULANCE, 4-LITTER, ARMORED, 4X4, M997 (2310-01-111-2274) (EIC: BBA); M997A1 (2310-01-372-3934) (EIC: BBZ); M997A2 (2310-01-380-8225) (EIC: BB8);

TRUCK, AMBULANCE, 2-LITTER, SOFT TOP, 4X4, M1035 (2310-01-146-7194); M1035A1 (2310-01-371-9585) (EIC: BBW); M1035A2 (2310-01-380-8290) (EIC: BB9).

Approved for public release; distribution is unlimited.

HEADQUARTERS, DEPARTMENTS OF THE ARMY, THE AIR FORCE, AND MARINE CORPS

JANUARY 1996

PIN: 058006-001

ARMY TM 9-2320-280-10
AIR FORCE TO 36A12-1A-2091-1
MARINE CORPS TM 2320-10/6B

CHANGE

NO. 2

HEADQUARTERS,
DEPARTMENTS OF THE ARMY,
THE AIR FORCE, AND MARINE CORPS
WASHINGTON, D.C., *30 NOVEMBER 2001*

OPERATOR'S MANUAL

TRUCK, UTILITY: CARGO/TROOP CARRIER, 1-1/4 TON, 4X4,
M998 (2320-01-107-7155) (EIC: BBD); M998A1 (2320-01-371-9577) (EIC: BBN);

TRUCK, UTILITY: CARGO/TROOP CARRIER, 1-1/4 TON, 4X4, W/WINCH,
M1038 (2320-01-107-7156) (EIC: BBE); M1038A1 (2320-01-371-9578) (EIC: BBP);

TRUCK, UTILITY: HEAVY VARIANT, 4X4, M1097 (2320-01-346-9317) (EIC: BBM);
M1097A1 (2320-01-371-9583) (EIC: BBU); M1097A2 (2320-01-380-8604) (EIC: BB6);
M1123 (2320-01-455-9593) (EIC: B6G);

TRUCK, UTILITY: TOW CARRIER, ARMORED, 1-1/4 TON, 4X4,
M966 (2320-01-107-7153) (EIC: BBC); M966A1 (2320-01-372-3932) (EIC: BBX);
M1121 (2320-01-456-1282) (EIC B6H);

TRUCK, UTILITY: TOW CARRIER, ARMORED, 1-1/4 TON, 4X4, W/WINCH,
M1036 (2320-01-107-7154) (EIC: BBH);

TRUCK, UTILITY: TOW CARRIER, W/SUPPLEMENTAL ARMOR, 1-1/4 TON, 4X4,
M1045 (2320-01-146-7191); M1045A1 (2320-01-371-9580) (EIC: BBR);
M1045A2 (2320-01-380-8229) (EIC: BB5);

TRUCK, UTILITY: TOW CARRIER, W/SUPPLEMENTAL ARMOR, 1-1/4 TON, 4X4, W/WINCH,
M1046 (2320-01-146-7188); M1046A1 (2320-01-371-9582) (EIC: BBT);

TRUCK, UTILITY: ARMAMENT CARRIER, ARMORED, 1-1/4 TON, 4X4,
M1025 (2320-01-128-9551) (EIC: BBF); M1025A1 (2320-01-371-9584) (EIC: BBV);
M1025A2 (2320-01-380-8233) (EIC: BB3);

TRUCK, UTILITY: ARMAMENT CARRIER, ARMORED, 1-1/4 TON, 4X4, W/WINCH,
M1026 (2320-01-128-9552) (EIC: BBG); M1026A1 (2320-01-371-9579) (EIC: BBQ);

TRUCK, UTILITY: ARMAMENT CARRIER, W/SUPPLEMENTAL ARMOR, 1-1/4 TON, 4X4,
M1043 (2320-01-146-7190) M1043A1 (2320-01-372-3933) (EIC: BBY);
M1043A2 (2320-01-380-8213) (EIC: BB4);

TRUCK, UTILITY: ARMAMENT CARRIER, W/SUPPLEMENTAL ARMOR, 1-1/4 TON, 4X4, W/WINCH,
M1044 (2320-01-146-7189); M1044A1 (2320-01-371-9581) (EIC: BBS);

TRUCK, UTILITY: S250 SHELTER CARRIER, 4X4, M1037 (2320-01-146-7193) (EIC: BBK);

TRUCK, UTILITY: S250 SHELTER CARRIER, 4X4, W/WINCH, M1042 (2320-01-146-7187);

TRUCK, AMBULANCE, 2-LITTER, ARMORED, 4X4, M996 (2310-01-111-2275) (EIC: BBB);
M996A1 (2310-01-372-3935) (EIC: BB2);

TRUCK, AMBULANCE, 4-LITTER, ARMORED, 4X4, M997 (2310-01-111-2274) (EIC: BBA);
M997A1 (2310-01-372-3934) (EIC: BBZ); M997A2 (2310-01-380-8225) (EIC: BB8);

TRUCK, AMBULANCE, 2-LITTER, SOFT TOP, 4X4, M1035 (2310-01-146-7194);
M1035A1 (2310-01-371-9585) (EIC: BBW); M1035A2 (2310-01-380-8290) (EIC: BB9).

TM 9-2320-280-10, 31 January 1996, is changed as follows:

1. Remove old pages and insert new pages as indicated below.

2. New or changed material is indicated by a vertical bar in the margin of the page.

Approved for public release; distribution is unlimited.

Remove page	Insert page
A and B	A and B
2-125 and 2-126	2-125 and 2-126
2-133 and 2-134	2-132.1 through 2-134
B-1 and B-2	B-1 and B-2
Index 5 and Index 6	Index 5 and Index 6

3. File this change sheet in front of the publication for reference purposes.

By Order of the Secretary of the Army:

ERIC K. SHINSEKI
General, United States Army
Chief of Staff

Official:

JOEL B. HUDSON
Administrative Assistant to the
Secretary of the Army
0126701

By Order of the Secretary of the Air Force:

RONALD R. FOGLEMAN
General, United States Air Force
Chief of Staff

Official:

HENRY VICCELLIO, JR.
General, United States Air Force
Commander, Air Force Materiel Command

By Order of the Marine Corps:

D.R. BLOOMER
Colonel, USMC
Director, Program Support
Marine Corps Systems Command

Distribution:

To be distributed in accordance with the initial distribution number (IDN) 380377, requirements for TM 9-2320-280-10.

ARMY TM 9-2320-280-10
AIR FORCE TO 36A12-1A-2091-1
MARINE CORPS TM 2320-10/6B

CHANGE

NO. 1

HEADQUARTERS,
DEPARTMENTS OF THE ARMY,
THE AIR FORCE, AND MARINE CORPS
WASHINGTON, D.C., *31 MAY 1999*

OPERATOR'S MANUAL

TRUCK, UTILITY: CARGO/TROOP CARRIER, 1-1/4 TON, 4X4,
M998 (2320-01-107-7155) (EIC: BBD); M998A1 (2320-01-371-9577) (EIC: BBN);

TRUCK, UTILITY: CARGO/TROOP CARRIER, 1-1/4 TON, 4X4, W/WINCH,
M1038 (2320-01-107-7156) (EIC: BBE); M1038A1 (2320-01-371-9578) (EIC: BBP);

TRUCK, UTILITY: HEAVY VARIANT, 4X4, M1097 (2320-01-346-9317) (EIC: BBM);
M1097A1 (2320-01-371-9583) (EIC: BBU); M1097A2 (2320-01-380-8604) (EIC: BB6); M1123 (2320-01-455-9593) (EICB6G);

TRUCK, UTILITY: TOW CARRIER, ARMORED, 1-1/4 TON, 4X4,
M966 (2320-01-107-7153) (EIC: BBC); M966A1 (2320-01-372-3932) (EIC: BBX); M1121 (2320-01-456-1282)(EICB6H);

TRUCK, UTILITY: TOW CARRIER, ARMORED, 1-1/4 TON, 4X4, W/WINCH,
M1036 (2320-01-107-7154) (EIC: BBH);

TRUCK, UTILITY: TOW CARRIER, W/SUPPLEMENTAL ARMOR, 1-1/4 TON, 4X4,
M1045 (2320-01-146-7191); M1045A1 (2320-01-371-9580) (EIC: BBR); M1045A2 (2320-01-380-8229) (EIC: BB5);

TRUCK, UTILITY: TOW CARRIER, W/SUPPLEMENTAL ARMOR, 1-1/4 TON, 4X4, W/WINCH,
M1046 (2320-01-146-7188); M1046A1 (2320-01-371-9582) (EIC: BBT);

TRUCK, UTILITY: ARMAMENT CARRIER, ARMORED, 1-1/4 TON, 4X4,
M1025 (2320-01-128-9551) (EIC: BBF); M1025A1 (2320-01-371-9584) (EIC: BBV); M1025A2 (2320-01-380-8233) (EIC: BB3);

TRUCK, UTILITY: ARMAMENT CARRIER, ARMORED, 1-1/4 TON, 4X4, W/WINCH,
M1026 (2320-01-128-9552) (EIC: BBG); M1026A1 (2320-01-371-9579) (EIC: BBQ);

TRUCK, UTILITY: ARMAMENT CARRIER, W/SUPPLEMENTAL ARMOR, 1-1/4 TON, 4X4,
M1043 (2320-01-146-7190) M1043A1 (2320-01-372-3933) (EIC: BBY); M1043A2 (2320-01-380-8213) (EIC: BB4);

TRUCK, UTILITY: ARMAMENT CARRIER, W/SUPPLEMENTAL ARMOR, 1-1/4 TON, 4X4, W/WINCH,
M1044 (2320-01-146-7189); M1044A1 (2320-01-371-9581) (EIC: BBS);

TRUCK, UTILITY: S250 SHELTER CARRIER, 4X4, M1037 (2320-01-146-7193) (EIC: BBK);

TRUCK, UTILITY: S250 SHELTER CARRIER, 4X4, W/WINCH, M1042 (2320-01-146-7187);

TRUCK, AMBULANCE, 2-LITTER, ARMORED, 4X4, M996 (2310-01-111-2275) (EIC: BBB); M996A1 (2310-01-372-3935) (EIC: BB2);

TRUCK, AMBULANCE, 4-LITTER, ARMORED, 4X4, M997 (2310-01-111-2274) (EIC: BBA);
M997A1 (2310-01-372-3934) (EIC: BBZ); M997A2 (2310-01-380-8225) (EIC: BB8);

TRUCK, AMBULANCE, 2-LITTER, SOFT TOP, 4X4,
M1035 (2310-01-146-7194); M1035A1 (2310-01-371-9585) (EIC: BBW); M1035A2 (2310-01-380-8290) (EIC: BB9).

TM 9-2320-280-10, 31 January 1996, is changed as follows:

1. Two new models have been added to the front cover. The new cover, located at the end of the change package, replaces the existing cover.
2. Remove old pages and insert new pages as indicated below.
3. New or changed material is indicated by a vertical bar in the margin of the page.

Remove page	Insert page
warning a through d	warning a through d
None	A and B (After warning d)
i and ii	i and ii
1-1 through 1-10	1-1 through 1-10

Approved for public release; distribution is unlimited.

Remove page	Insert page
1-21 through 1-24	1-21 through 1-24
1-29 through 1-34	1-29 through 1-34
2-3 through 2-8	2-3 through 2-8
2-25 through 2-28	2-25 through 2-28
2-31 through 2-34	2-31 through 2-34
2-41 through 2-46	2-41 through 2-46
2-61 and 2-62	2-61 and 2-62
2-65 through 2-80	2-65 through 2-80
2-83 through 2-104	2-83 through 2-104.3/(2-104.4 blank)
2-105 through 2-112	2-105 through 2-112
2-121 and 2-122	2-121 and 2-122
2-125 and 2-126	2-124.1 through 2-126
2-133 through 2-146	2-133 through 2-146
2-151 through 2-156	2-151 through 2-156
2-165 through 2-168	2-165 through 2-168
2-171 and 2-172	2-171 and 2-172
2-179 and 2-180	2-179 and 2-180
2-183 and 2-184	2-182.1 through 2-184
3-3 through 3-6	3-3 through 3-6
3-9 through 3-12	3-9 through 3-12
3-15 through 3-24	3-15 through 3-24
3-27 through 3-34	3-27 through 3-34
3-39/(3-40 blank)	3-39 and 3-40
A-1 and A-2	A-1 and A-2
B-1 through B-8	B-1 through B-10
C-1 through C-4	C-1 through C-4
D-1 through D-6	D-1 through D-6
E-1 and E-2	E-1 and E-2
E-7 and E-8	E-7 and E-8
E-11 and E-12	E-11 and E-12
F-1 through F-18	F-1 through F-18
F-21 through F-23/(F-24 blank)	F-21 through F-23/(F-24 blank)
G-1 through G-8	G-1 through G-8
G-13 through G-16	G-13 through G-16
Index 1 through Index 6	Index 1 through Index 7/(Index 8 blank)
cover	cover

4. File this change sheet in front of the publication for reference purposes.

By Order of the Secretary of the Army:

ERIC K. SHINSEKI
General, United States Army
Chief of Staff

Official:

JOEL B. HUDSON
Administrative Assistant to the
Secretary of the Army
05688

By Order of the Secretary of the Air Force:

RONALD R. FOGLEMAN
General, United States Air Force
Chief of Staff

Official:

HENRY VICCELLIO, JR.
General, United States Air Force
Commander, Air Force Materiel Command

By Order of the Marine Corps:

D.R. BLOOMER
Colonel, USMC
Director, Program Support
Marine Corps Systems Command

Distribution:

To be distributed in accordance with the initial distribution number (IDN) 380377, requirements for TM 9-2320-280-10.

WARNING

EXHAUST GASES CAN KILL

Brain damage or death can result from heavy exposure. Precautions must be followed to ensure crew safety when the personnel heater or engine of any vehicle is operated for any purpose.

1. Do not operate your vehicle engine in enclosed areas.
2. Do not idle vehicle engine with vehicle windows closed.
3. Be alert at all times for exhaust odors.
4. Be alert for exhaust poisoning symptoms. They are:
    - Headache
    - Dizziness
    - Sleepiness
    - Loss of muscular control
5. If you see another person with exhaust poisoning symptoms:
    - Remove person from area
    - Expose to open air
    - Keep person warm
    - Do not permit physical exercise
    - Administer artificial respiration, if necessary*
    - Notify a medic
    - For artificial respiration, refer to FM 21-11.
6. BE AWARE, the field protective mask and ambulance Nuclear-Biological-Chemical (NBC) system will not protect you from exhaust poisoning.

THE BEST DEFENSE AGAINST EXHAUST POISONING IS ADEQUATE VENTILATION.

WARNING SUMMARY

- Never open one end of cargo shell door without first ensuring that the opposite end is securely closed. Not doing so may cause both ends to open at the same time, causing damage to equipment, mission abort, or injury to personnel.
- Drycleaning solvent is flammable and will not be used near an open flame. A fire extinguisher will be kept nearby when the solvent is used. Use only in well-ventilated places. Failure to do this may result in injury to personnel and/or damage to equipment.
- Protective gloves, clothing, and/or respiratory equipment must be worn whenever caustic, toxic, or flammable cleaning solutions are used. Failure to do this may result in injury to personnel and/or damage to equipment.
- Do not perform fuel or battery system checks, inspections, or maintenance while smoking or near sparks. Fuel may ignite and batteries may explode causing damage to vehicle and injury or death to personnel.
- The automatic transmissions on M998 and “A1” vehicles do not have a “PARK” position. Whenever the vehicle is parked, or the transmission is in “NEUTRAL,” the parking brake MUST BE APPLIED. Damage to equipment and injury to personnel may occur if these instructions are not followed.
- The automatic transmissions on M1123 and “A2” vehicles have a “PARK” position. Never use the transmission shift lever in place of the parking brake. Set the parking brake. Ensure the transmission shift lever in in the “P” (park) position and transfer case shift lever is NOT in the “N” (neutral) position. Damage to equipment and injury to personnel may occur if these instructions are not followed.
- Ensure all slack from two-point seatbelt adjusting strap or three-point seatbelt is removed. Two-point seatbelt retracts but does not lock in any position. Three-point seatbelt retracts and will lock only during sudden stops or impact. Injury to personnel will result if an accident occurs and seatbelts are not in use or adjusted properly.
- Extreme caution shall be taken when transporting personnel. Rollover protection and seatbelts are available for the crew area only and are not provided in the troop/cargo area. Despite certain design characteristics of the vehicle, such as improved capabilities, failure to use basic safe driving skills may result in injury or death to personnel and damage to equipment.
- Operators are reminded to observe basic safe driving techniques/skills when operating vehicle. Vehicle speed must be reduced consistent with weather and road/terrain conditions. Obstacles such as stumps and boulders must be avoided.
- This vehicle has been designed to operate safely and efficiently within the limits specified in this TM. Operations beyond these limits are prohibited IAW AR 750-1 without written approval from the Commander, U.S. Army Tank-automotive and Armaments Command, ATTN: AMSTA-CM-S, Warren, MI 48397-5000.
- Prior to towing vehicle with rear wheels up, secure steering wheel to prevent front wheels from turning.
- Wear leather gloves when handling winch cable. Do not handle cable with bare hands. When fully extending winch cable, ensure that four wraps of winch cable remain on drum at all times. Direct all personnel to stand clear of winch cable during winch operation. Failure to do this may cause damage to vehicle and injury or death to personnel.

WARNING SUMMARY (Cont'd)

- Avoid using fire extinguisher in unventilated areas. Prolonged inhalation exposure to extinguishing agent or fumes from burning material may cause injury to personnel. Using fire extinguisher in windy area will cause rapid dispersal of extinguishing agent and reduce effectiveness in fire control.
- Vehicle operation in snow is a hazardous condition. Operator must travel at reduced speeds and be prepared to meet sudden changes in road conditions. Pump brakes gradually when stopping vehicle on ice or snow. Sudden braking will cause wheels to lock and vehicle to slide out of control causing damage to vehicle and injury or death to personnel.
- Do not rely on wet service brakes. Keep applying brakes until they dry out and uneven braking ceases. Failure to do this may cause damage to vehicle and injury or death to personnel.
- Exhaust components are hot after prolonged vehicle use. Ensure exhaust system components are cool before removing/installing exhaust assembly. Failure to do this will result in injury to personnel.
- Do not use the hand throttle as an automatic speed or cruise control. The hand throttle does not automatically disengage when brake is applied, resulting in increased stopping distances and possible hazardous and unsafe operation. Injury to personnel or damage to equipment may result.
- Do not operate heater when ventilation system is on. Damage to heater or injury to personnel will result.
- To ensure opening of the hood assembly is accomplished safely and effectively, always maintain the proper lifting posture, legs bent with back straight. When raising and securing hood, make sure the hood prop rod is secured to hood support bracket. When releasing hood prop rod, do not pull rod at hook end. Damage to equipment or injury to personnel will occur if hood is not raised, secured, and lowered properly.
- If NBC exposure is suspected, all air filter media should be handled by personnel wearing protective equipment. Consult your unit NBC officer or NBC NCO for appropriate handling or disposal instructions.
- Radial and bias ply tires should not be mixed on the same vehicle. Injury to personnel or damage to equipment may result.
- Do not use bias ply tires on the M1097, M1123, or any A1 and A2 models, under any condition. Due to tire load ratings and vehicle load carrying capabilities, only the load range "D" radial tire can be used on the M1097, M1123, and all A1 and A2 models.
- For M1097, M1123, and all A1 and A2 model vehicles only, hearing protection is required for driver and passengers when engine is running. Noise levels produced by these vehicles exceed 85 dBA, which may cause injury to personnel.
- The Department of Transportation requires 105 mm cannon ammunition to be in wooden boxes when transporting ammunition on public highways. Movement of cannon ammunition in fiber containers (inner pack) in the vehicle ammunition rack is restricted to other than public highways.
- Do not operate the vehicle without the windshield assembly positioned upright and the "B" pillar securely attached. Operation of the vehicle without these structures in place may result in injury to personnel and damage to equipment.

WARNING SUMMARY (Cont'd)

- Communication shelters AN/GRC-122 and AN/GRC-142 RATT may overload vehicle by up to 500 pounds. Use caution when driving to avoid damage to equipment or injury to personnel.
- Chock blocks shall be used when parking a vehicle with inoperative parking brakes, when operating in extreme cold conditions, when parking on inclines, or whenever and wherever maintenance is being performed. Failure to do so may result in injury to personnel or damage to equipment.
- Vehicle speed must be reduced consistent with weather and road/terrain conditions. Obstacles such as stumps and boulders must be avoided. Failure to use basic safe driving techniques/skills may result in injury or death to personnel and damage to equipment.
- Do not use tow pintle as a step when entering or exiting vehicle cargo area. Failure to do so may result in injury to personnel or damage to equipment.

LIST OF EFFECTIVE PAGES

NOTE: The portion of the text affected by the changes is indicated by a vertical line in the outer margins of the page.

Dates of issue for original and changed pages are:

Original . . . . . 0 . . . . . 31 January 1996

Change . . . . . 1 . . . . . 31 May 1999

Change . . . . . 2 . . . . . 30 November 2001

TOTAL NUMBER OF PAGES IN THIS PUBLICATION IS 398
CONSISTING OF THE FOLLOWING:

Page No.	*Change No.
Warning a	0
Warning b - d	1
A - B	2
i	1
ii	0
1-1 - 1-3	1
1-4 - 1-5	0
1-6 - 1-9	1
1-10 - 1-21	0
1-22 - 1-24	1
1-25 - 1-29	0
1-30 - 1-34	1
2-1 - 2-3	0
2-4	1
2-5	0
2-6 - 2-7	1
2-8 - 2-25	0
2-26 - 2-27	1
2-28 - 2-31	0
2-32 - 2-33	1
2-34 - 2-41	0
2-42	1
2-43	0
2-44 - 2-45	1
2-46 - 2-60	0
2-61 - 2-62	1
2-63 - 2-65	0
2-66	1
2-67	0
2-68 - 2-70	1
2-71	0
2-72 - 2-76	1
2-77	0
2-78	1
2-79	0
2-80	1
2-81 - 2-82	0
2-83 - 2-87	1
2-88 - 2-89	0
2-90 - 2-104	1
2-104.1 - 2-104.3 Added	1
2-104.4 Blank	1
2-105 - 2-106	1
2-107	0
2-108 - 2-112	1
2-113 - 2-120	0
2-121	1
2-122 - 2-124	0
2-124.1 - 2-124.2 Added	1
2-125	1
2-126	2
2-127 - 2-132	0
2-132.1 Added	2
2-132.2 Added	2
2-133 Blank	2
2-134	1
2-134.1 - 2-134.4 Added	1
2-135	1
2-136	0
2-137	1
2-138	0
2-139 - 2-144	1
2-145	0
2-146	1
2-147 - 2-151	0
2-152	1
2-153	0
2-154	1
2-155	0
2-156	1
2-157 - 2-165	0
2-166 - 2-167	1
2-168 - 2-171	0
2-172	1
2-173 - 2-179	0
2-180	1
2-181 - 2-182	0
2-182.1 - 2-182.2 Added	1
2-183 - 2-184	1
2-185 - 2-217	0
218 Blank	0
3-1 - 3-2	0
3-3	1
3-4	0
3-5	1
3-6 - 3-9	0
3-10 - 3-11	1
3-12 - 3-15	0
3-16	1
3-17	0
3-18 - 3-21	1
3-22	0
3-23	1
3-24 - 3-26	0
3-27 - 3-28	1
3-28.1 - 3-28.2 Added	1
3-29	1
3-30 - 3-31	0
3-32 - 3-33	1
3-34 - 3-38	0
3-39 - 3-40	1
A-1 - A-2	1
B-1	0
B-2	2
B-3 - B-4	1

*Zero in this column indicates original page.

LIST OF EFFECTIVE PAGES (Contd)

Page No.	*Change No.	Page No.	*Change No.	Page No.	*Change No.
B-4.1 - B-4.2 Added	1	E-11	1	G-2 - G-5	1
B-5 - B-10	1	E-12	0	G-6	0
C-1 - C-4	1	F-1 - F-5	1	G-7 - G-8	1
D-1	0	F-6 - F-7	0	G-9 - G-13	0
D-2 - D-6	1	F-8 - F-17	1	G-14 - G-16	1
E-1 - E-2	1	F-18 - F-21	0	Index-1 - Index-5	1
E-3 - E-6	0	F-22 - F-23	1	Index 6	2
E-7 - E-8	1	F-24 Blank	0	Index 7	1
E-9 - E-10	0	G-1	0	Index 8 Blank	0

*Zero in this column indicates original page.

*ARMY TM 9-2320-280-10
AIR FORCE TO 36A12-1A-2091-1
MARINE CORPS TM 2320-10/6B

TECHNICAL MANUAL
NO. 9-2320-280-10
NO. 2320-10/6B

TECHNICAL ORDER
NO. 36A12-1A-2091-1

HEADQUARTERS,
DEPARTMENTS OF THE ARMY,
THE AIR FORCE, AND MARINE CORPS
WASHINGTON, D.C. ***31 JANUARY 1996***

OPERATOR'S MANUAL

TRUCK, UTILITY: CARGO/TROOP CARRIER, 1-1/4 TON, 4X4, M998 (2320-01-107-7155) (EIC: BBD); M998A1 (2320-01-371-9577) (EIC: BBN);
TRUCK, UTILITY: CARGO/TROOP CARRIER, 1-1/4 TON, 4X4, W/WINCH, M1038 (2320-01-107-7156) (EIC: BBE); M1038A1 (2320-01-371-9578) (EIC: BBP);
TRUCK, UTILITY: HEAVY VARIANT, 4X4, M1097 (2320-01-346-9317) (EIC: BBM); M1097A1 (2320-01-371-9583) (EIC: BBU); M1097A2 (2320-01-380-8604) (EIC: BB6); M1123 (2320-01-455-9593) (EICB6G);
TRUCK, UTILITY: TOW CARRIER, ARMORED, 1-1/4 TON, 4X4, M966 (2320-01-107-7153) (EIC: BBC); M966A1 (2320-01-372-3932) (EIC: BBX); M1121 (2320-01-456-1282) (EICB6H);
TRUCK, UTILITY: TOW CARRIER, ARMORED, 1-1/4 TON, 4X4, W/WINCH, M1036 (2320-01-107-7154) (EIC: BBH);
TRUCK, UTILITY: TOW CARRIER, W/SUPPLEMENTAL ARMOR, 1-1/4 TON, 4X4, M1045 (2320-01-146-7191); M1045A1 (2320-01-371-9580) (EIC: BBR); M1045A2 (2320-01-380-8229) (EIC: BB5);
TRUCK, UTILITY: TOW CARRIER, W/SUPPLEMENTAL ARMOR, 1-1/4 TON, 4X4, W/WINCH, M1046 (2320-01-146-7188); M1046A1 (2320-01-371-9582) (EIC: BBT);
TRUCK, UTILITY: ARMAMENT CARRIER, ARMORED, 1-1/4 TON, 4X4, M1025 (2320-01-128-9551) (EIC: BBF); M1025A1 (2320-01-371-9584) (EIC: BBV); M1025A2 (2320-01-380-8233) (EIC: BB3);
TRUCK, UTILITY: ARMAMENT CARRIER, ARMORED, 1-1/4 TON, 4X4, W/WINCH, M1026 (2320-01-128-9552) (EIC: BBG); M1026A1 (2320-01-371-9579) (EIC: BBQ);
TRUCK, UTILITY: ARMAMENT CARRIER, W/SUPPLEMENTAL ARMOR, 1-1/4 TON, 4X4, M1043 (2320-01-146-7190); M1043A1 (2320-01-372-3933) (EIC: BBY); M1043A2 (2320-01-380-8213) (EIC: BB4);
TRUCK, UTILITY: ARMAMENT CARRIER, W/SUPPLEMENTAL ARMOR, 1-1/4 TON, 4X4, W/WINCH, M1044 (2320-01-146-7189); M1044A1 (2320-01-371-9581) (EIC: BBS);
TRUCK, UTILITY: S250 SHELTER CARRIER, 4X4, M1037 (2320-01-146-7193) (EIC: BBK);
TRUCK, UTILITY: S250 SHELTER CARRIER, 4X4, W/WINCH, M1042 (2320-01-146-7187);
TRUCK, AMBULANCE, 2-LITTER, ARMORED, 4X4, M996 (2310-01-111-2275) (EIC: BBB); M996A1 (2310-01-372-3935) (EIC: BB2);
TRUCK, AMBULANCE, 4-LITTER, ARMORED, 4X4, M997 (2310-01-111-2274) (EIC: BBA); M997A1 (2310-01-372-3934) (EIC: BB2); M997A2 (2310-01-380-8225) (EIC: BB8);
TRUCK, AMBULANCE, 2-LITTER, SOFT TOP, 4X4, M1035 (2310-01-146-7194); M1035A1 (2310-01-371-9585) (EIC: BBW); M1035A2 (2310-01-380-8290) (EIC: BB9).

Approved for public release; distribution is unlimited.

REPORTING OF ERRORS AND RECOMMENDING IMPROVEMENTS

You can help improve this publication. If you find any mistakes or if you know of a way to improve the procedures, please let us know. Submit your DA Form 2028-2 (Recommended Changes to Equipment Technical Publications), through the Internet, on the Army Electronic Product Support (AEPS) website. The Internet address is http://aeps.ria.army.mil. If you need a password, scroll down and click on "ACCESS REQUEST FORM." The DA Form 2028 is located in the ONLINE FORMS PROCESSING section of the AEPS. Fill out the form and click on SUBMIT. Using this form on the AEPS will enable us to respond quicker to your comments and better manage the DA Form 2028 program. You may also mail, fax or email your letter, DA Form 2028, or DA Form 2028-2 direct to: Commander, U.S. Army Tank-automotive and Armaments Command, ATTN: AMSTA-LC-CIP-WT, Rock Island, IL 61299-7630. The email address is amsta-ac-nml@ria.army .mil. The fax number is DSN 793-0726 or Commercial (309) 782-0726. (Marine Corps) Submit NAVMC 10772 to the Commanding General (826), MCLB, 814 Radford Blvd., Albany, GA 31704-1128.

*This publication supersedes TM 9-2320-280-10 dated 18 JUNE 1991 and all changes.

			Page
CHAPTER	1.	INTRODUCTION	1-1
Section	I.	General Information	1-1
	II.	Equipment Description	1-3
CHAPTER	2.	OPERATING INSTRUCTIONS	
Section	I.	Description and Use of Operator's Controls and Indicators	2-1
	II.	Preventive Maintenance Checks and Services	2-60
	III.	Operation Under Usual Conditions	2-105
	IV.	Operation Under Unusual Conditions	2-137
	V.	Cargo/Troop Carrier and S250 Shelter Carrier Operation	2-166
	VI.	TOW/Armament Carrier Operation	2-184
	VII.	Ambulance Operation	2-191
CHAPTER	3.	MAINTENANCE INSTRUCTIONS	3-1
Section	I.	Lubrication	3-1
	II.	Troubleshooting	3-2
	III.	Maintenance Procedures	3-10
APPENDIX	A.	REFERENCES	A-1
APPENDIX	B.	COMPONENTS OF END ITEM AND BASIC ISSUE ITEMS LISTS	B-1
Section	I.	Introduction	B-1
	II.	Components of End Item	B-2
	III.	Basic Issue Items	B-3
APPENDIX	C.	ADDITIONAL AUTHORIZATION LIST	C-1
Section	I.	Introduction	C-1
	II.	Additional Authorization List	C-2
APPENDIX	D.	EXPENDABLE/DURABLE SUPPLIES AND MATERIALS LIST	D-1
Section	I.	Introduction	D-1
	II.	Expendable/Durable Supplies and Materials List	D-2
APPENDIX	E.	STOWAGE AND SIGN GUIDE	E-1
APPENDIX	F.	ON-VEHICLE EQUIPMENT LOADING PLANS	F-1
APPENDIX	G.	LUBRICATION INSTRUCTIONS	G-1
INDEX			Index 1

CHAPTER 1
INTRODUCTION

Section I. GENERAL INFORMATION

1-1. SCOPE

a. This manual contains instructions for operating and servicing M998 series vehicles.

These vehicles are:

(1) M998 and M998A1 Cargo/Troop Carriers
(2) M1038 and M1038A1 Cargo/Troop Carriers, W/W
(3) M1097, M1097A1, M1097A, and M1123 Heavy Variants
(4) M966, M966A1, and M1121 TOW Carriers, Armored
(5) M1036 TOW Carrier, Armored, W/W
(6) M1045, M1045A1, and M1045A2 TOW Carriers, W/Supplemental Armor
(7) M1046 and M1046A1 TOW Carriers, W/Supplemental Armor, W/W
(8) M1025, M1025A1, and M1025A2 Armament Carriers, Armored
(9) M1026 and M1026A1 Armament Carriers, Armored, W/W
(10) M1043, M1043A1, and M1043A2 Armament Carriers, W/Supplemental Armor
(11) M1044 and M1044A1 Armament Carriers, W/Supplemental Armor, W/W
(12) M1037 S250 Shelter Carrier
(13) M1042 S250 Shelter Carrier, W/W
(14) M996 and M996A1 2-Litter Ambulances, Armored
(15) M997, M997A1, and M997A2 4-Litter Ambulances, Armored
(16) M1035, M1035A1, and M1035A2 2-Litter Ambulances, Soft Top

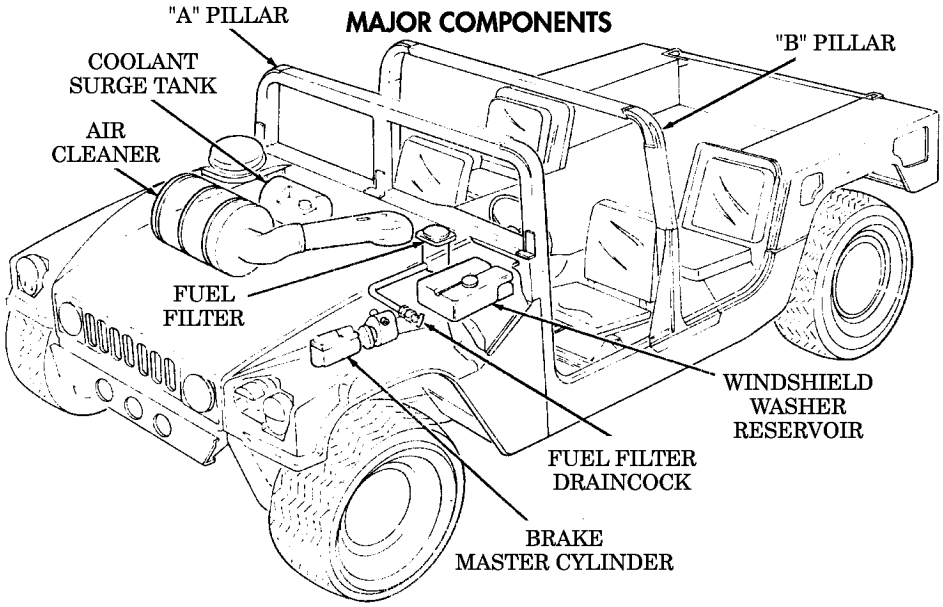

b. The material presented here provides operators with information and procedures needed to provide the safest and most efficient operation of these vehicles. This information includes:

(1) Operator forms and records.

(2) Descriptions of each vehicle and its operation.

(3) The purpose of each vehicle.

(4) Vehicle limitations.

(5) The function of all controls and indicators.

(6) Operating instructions for each vehicle.

(7) Cautions and warnings to operators regarding safety to personnel and equipment.

(8) How and when to use special purpose kits.

(9) Operator maintenance checks and service procedures.

(10) Troubleshooting procedures to be followed by operators if the vehicle malfunctions.

1-2. MAINTENANCE FORMS AND RECORDS

(Army) Department of the Army forms and procedures used for equipment maintenance will be those prescribed by DA Pam 738-750, The Army Maintenance Management System (TAMMS). (Marine Corps) Refer to TM 4700-15/1 series.

1-3. HAND RECEIPT MANUAL

This operator's manual has a companion document with a TM number followed by "-HR" (which stands for Hand Receipt). The TM 9-2320-280-10-HR consists of preprinted hand receipts (DA Form 2062) that list end item related equipment (i.e., COEI, BII, and AAL) you must account for. As an aid to property accountability, additional -HR manuals may be requisitioned from the following source in accordance with procedures in chapter 12, AR 25-30:

Commander
U.S. Army Publications Distribution Center
2800 Eastern Blvd.
Baltimore, MD 21220-2896

1-4. REPORTING EQUIPMENT IMPROVEMENT RECOMMENDATIONS (EIR)

(Army) If your M998 series vehicles need improvement, let us know. Send us an EIR. You, the user, are the only one who can tell us what you don't like about your equipment. Let us know why you don't like the design or performance. Put it on an SF 368 (Product Quality Deficiency Report). Mail it to us at: Commander, U.S. Army Tank-automotive and Armaments Command, ATTN: AMSTA-TR-Q, Warren, Michigan 48397-5000. We'll send you a reply.

1-5. EQUIPMENT IMPROVEMENT REPORT AND MAINTENANCE DIGEST (EIR MD)

The quarterly Equipment Improvement Report and Maintenance Digest, TB 43-0001-39 series, contains valuable field information on the equipment covered in this manual. The information in the TB 43-0001-39 series is compiled from some of the Equipment Improvement Reports that you prepared on the vehicles covered in this manual. Many of these articles result from comments, suggestions, and improvement recommendations that you submitted to the EIR program. The TB 43-0001-39 series contains information on equipment improvements, minor alterations, proposed Modification Work Orders (MWOs), warranties (if applicable), actions taken on some of your DA Form 2028s (Recommended Changes to Publications), and advance information on proposed changes that may affect this manual. The information will help you in doing your job better and will help in keeping you advised of the latest changes to this manual. Also refer to DA Pam 25-30, Consolidated Index of Army Publications and Blank Forms, and appendix A, References, of this manual. (Marine Corps) Submit QDR's in accordance with MCO 4855-10. For those with access to the World Wide Web (WWW), the EIR MD can be viewed through the Army Electronic Product Support. The site is http://aeps.ria.army.mil.

1-6. BREAK-IN SERVICE

Upon receipt of vehicle, or after engine replacement, break-in precautions must be observed during the first 500 miles (805 kilometers) of operation. For break-in procedure, refer to paragraph 2-9.

Section II. EQUIPMENT DESCRIPTION

1-7. EQUIPMENT CHARACTERISTICS, CAPABILITIES, AND FEATURES

The 1-1/4 ton, 4x4, M998 series vehicles are tactical vehicles designed for use over all types of roads, as well as cross-country terrain in all weather conditions. The vehicles have four driving wheels powered by a V-8 liquid-cooled diesel engine. Four-wheel hydraulic service brakes and a mechanical parking brake are common to all models in the M998 series. All vehicles are equipped with a pintle hook for towing. Tiedown and lifting eyes are provided for air, rail, or sea shipment.

1-8. METRIC SYSTEM

The equipment/system described herein contains metric components and requires metric, common, and special tools; therefore, metric units in addition to standard units will be used throughout this publication. In addition, a metric conversion table is located on the inside back cover of this publication.

1-9. CARGO/TROOP CARRIERS (M998, M998A1, M1038, AND M1038A1)

a. Differences. The only difference between the M998 and M998A1 cargo/troop carriers and the M1038 and M1038A1 cargo/troop carriers is that the M998 and M998A1 do not have winches and the M1038 and M1038A1 do. This difference affects:

- Vehicle Length
- Vehicle Weight
- Shipping Dimensions
- Approach Angle
- Special Winch-Assisted Operations

It does not affect the basic purpose, performance, or special limitations of the vehicles.

b. Purpose of the Vehicle. M998, M998A1, M1038, and M1038A1 cargo/troop carriers are used to transport equipment, materials, and/or personnel. The cargo carrier is capable of transporting a payload (including crew) of 2,500 pounds (1,134 kilograms). The troop carrier is capable of transporting a two-man crew and eight passengers. Both use a troop seat kit for troop transport operations. The cargo/troop carrier also has a four-man crew configuration. The M1038 and M1038A1 are equipped with winches. This feature permits recovery operations of similar vehicles.

c. Performance. Fully-loaded M998, M998A1, M1038, and M1038A1 cargo/troop carriers will climb road grades as steep as 60% (31°) and traverse a side slope of up to 40% (22°). The vehicle fords hard bottom water crossing up to 30 inches (76 centimeters) without a deepwater fording kit and 60 inches (152 centimeters) with the kit. Refer to table 1-15 for cruising range.

d. Special Limitations. None.

e. Special Instructions in the Manual.

(1) Refer to paragraph 2-2, Controls, Indicators, and Equipment.

(2) Refer to paragraph 2-44, Troop Seat Kit Operation.

(3) Refer to chapter 2, section V, Cargo/Troop Carrier and S250 Shelter Carrier Operation.

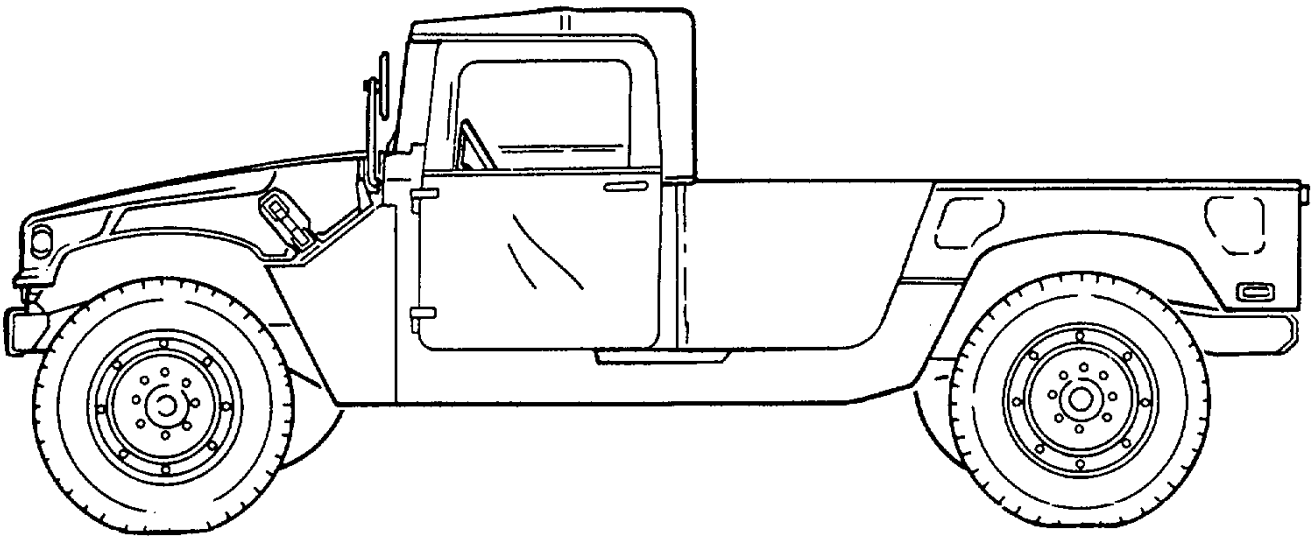

M998 AND M998A1

(WITH 2-MAN SOFT TOP INSTALLED)

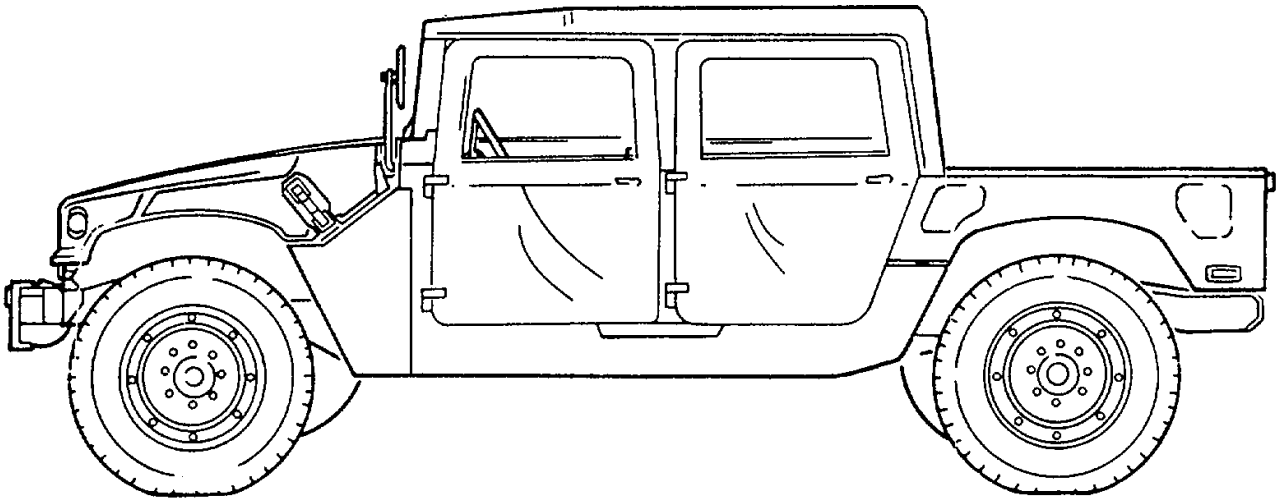

M1038 AND M1038A1 W/WINCH

(WITH 4-MAN SOFT TOP INSTALLED)

1-10. HEAVY VARIANT CARGO/TROOP CARRIERS (M1097, M1097A1, M1097A2, AND M1123)

a. Differences. The difference between the M998 and M998A1 cargo/troop carriers and the M1097, M1097A1, M1097A2, and M1123 heavy variant cargo/troop carriers is that the M1097, M1097A1, M1097A2, and M1123 are specifically designed to accommodate a higher payload capacity. The M1123 and A2 models have new bumpers, which make the vehicles slightly longer. A 9,000 lb winch is also available for the M1123 and A2 models as an option. These differences affect:

- Approach Angle
- Special Winch-Assisted Operations
- Vehicle Length
- Vehicle Weight
- Shipping Dimensions

It does not affect the basic purpose, performance, or special limitations of the vehicles.

b. Purpose of the Vehicle. M1097, M1097A1, M1097A2, and M1123 heavy variant cargo/troop carriers are used to transport equipment, materials, and/or personnel. The heavy variant troop carrier is capable of transporting a two-man crew and eight passengers. The heavy variant cargo carrier is capable of transporting a payload (including crew) of 4,400 pounds (1,998 kilograms). The M1097, M1097A1, M1097A2, and M1123 use a troop seat kit for troop transport operations, a 200 ampere umbilical power cable to power shelter equipment, and stowage racks for ammunition and equipment. For higher payload capacity, the M1097, M1097A1, M1097A2, and M1123 are equipped with a reinforced frame, crossmembers, lifting shackles, heavy-duty rear springs, shock absorbers, reinforced control arms, heavy-duty tires and rims, and a transfer case and differential with a modified gear ratio.

c. Performance. Fully-loaded M1097, M1097A1, M1097A2, and M1123 heavy variant cargo/troop carriers will climb road grades as steep as 60% (31°) and traverse a side slope of up to 40% (22°). The vehicle fords hard bottom water crossing up to 30 inches (76 centimeters) without a deep water fording kit and 60 inches (152 centimeters) with the kit. Refer to table 1-15 for cruising range.

d. Special Limitations. None.

e. Special Instructions in the Manual.

(1) Refer to paragraph 2-2, Controls, Indicators, and Equipment.

(2) Refer to paragraph 2-44, Troop Seat Kit Operation.

(3) Refer to chapter 2, section V, Cargo/Troop Carrier and S250 Shelter Carrier Operation (if equipped).

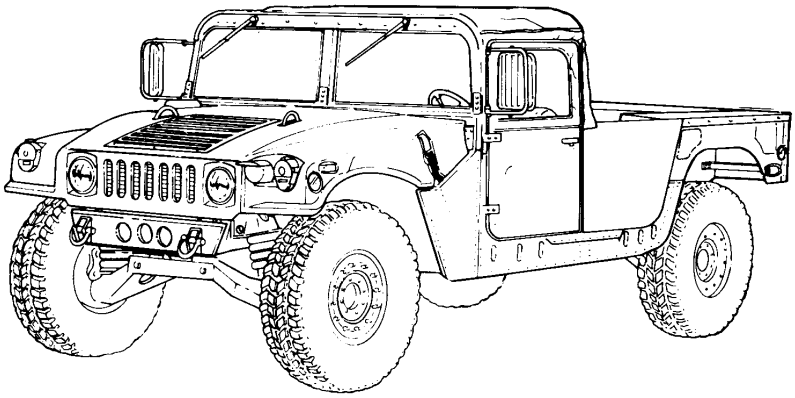

M1097 AND M1097A1
(WITH 2-MAN SOFT TOP INSTALLED)

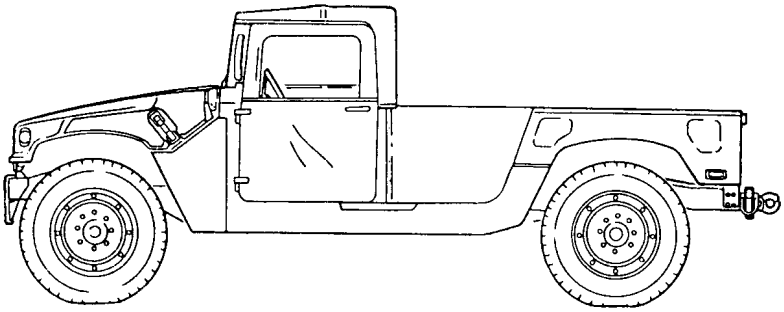

M1097A2

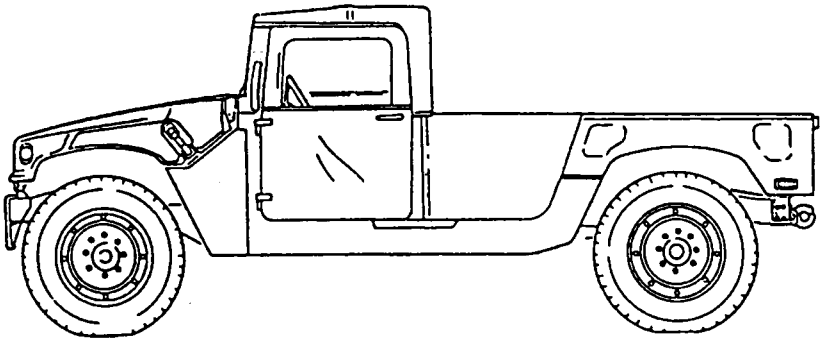

M1123

1-11. TOW CARRIERS, ARMORED (M966, M966A1, M1036, AND M1121)

a. Differences. The only difference between the M966, M966A1, and M1121 TOW carrier armored vehicles and the M1036 TOW carrier armored vehicle is that the M966, M966A1, and M1121 do not have winches and the M1036 does. This difference affects:

- Vehicle Length
- Vehicle Weight
- Shipping Dimensions
- Approach Angle
- Special Winch-Assisted Operations

It does not affect the basic purpose, performance, or special limitations of the vehicles.

b. Purpose of the Vehicle. M966, M966A1, M1036, and M1121 TOW carriers are used to mount and operate the TOW missile launcher system with armor protection for crew, TOW system components, and ammunition. The M1036 is equipped with a winch. This feature permits recovery operations of similar vehicles.

c. Performance. Fully-loaded M966, M966A1, M1036, and M1121 TOW carriers will climb road grades as steep as 60% (31°) and traverse a side slope of up to 40% (22°). The vehicles ford hard bottom water crossings up to 30 inches (76 centimeters) without a deep water fording kit and 60 inches (152 centimeters) with the kit. Refer to table 1-15 for cruising range.

d. Special Limitations. Weapon station azimuth is limited to 300° left and right of vehicle centerline when Vehicle Power Conditioner (VPC) cables are connected. With launcher installed, elevation is limited to 20° and depression is limited to 10°.

e. Special Instructions in the Manual.

(1) Refer to paragraph 2-2, Controls, Indicators, and Equipment.

(2) Refer to chapter 2, section VI, TOW/Armament Carrier Operation.

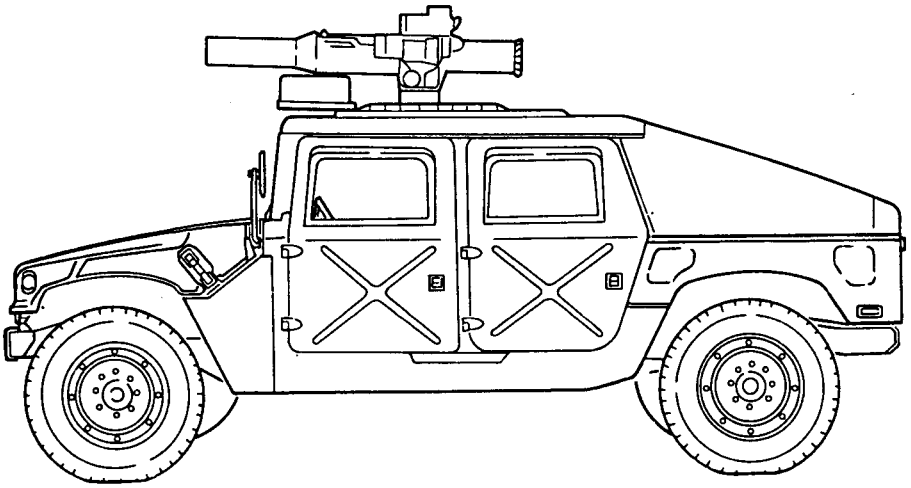

M966, M966A1, AND M1121

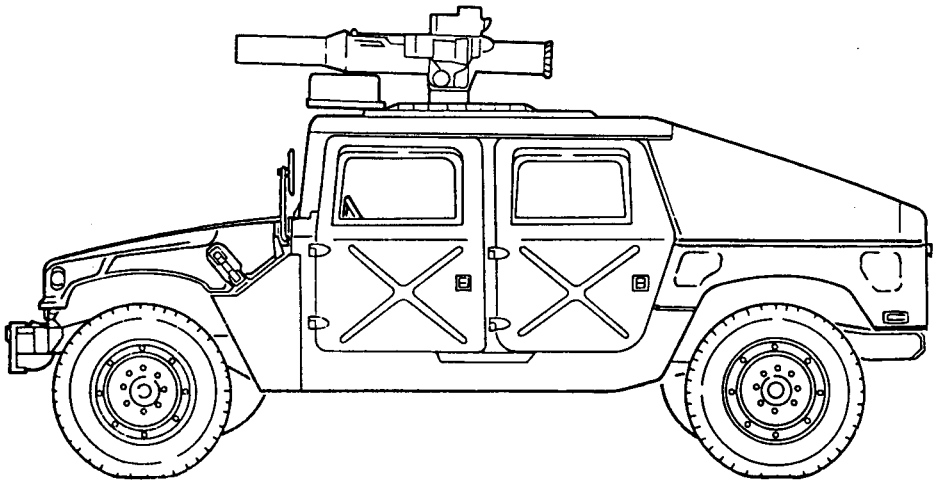

M1036 W/WINCH

1-12. TOW CARRIERS, W/SUPPLEMENTAL ARMOR (M1045, M1045A1, M1045A2, M1046, AND M1046A1)

a. Differences. The difference between the M1045, M1045A1, and M1045A2 TOW carriers w/supplemental armor and the M1046 and M1046A1 TOW carriers w/supplemental armor is that the M1045, M1045A1, and M1045A2 do not have winches and the M1046 and M1046A1 do. The A2 models have new bumpers, which make the vehicles slightly longer. A 9,000 lb winch is also available for the A2 models as an option. These differences affect:

- Vehicle Length
- Vehicle Weight
- Shipping Dimensions
- Approach Angle
- Special Winch-Assisted Operations

It does not affect the basic purpose, performance, or special limitations of the vehicles.

b. Purpose of the Vehicle. The M1045, M1045A1, M1045A2, M1046, and M1046A1 provide added ballistic protection for TOW system components, crew, and ammunition. The M1046 and M1046A1 are equipped with winches. This feature permits recovery operations of similar vehicles.

c. Performance. Fully-loaded M1045, M1045A1, M1045A2, M1046, and M1046A1 TOW carriers w/supplemental armor will climb road grades as steep as 60% (3-1°) and traverse a side slope of up to 40% (220). The vehicles ford hard bottom water crossings up to 30 inches (76 centimeters) without a deepwater fording kit and 60 inches (152 centimeters) with the kit. Refer to table 1-15 for cruising range.

d. Special Limitations. Weapon station azimuth is limited to 300° left and right of vehicle centerline when Vehicle Power Conditioner (VPC) cables are connected. With launcher installed, elevation is limited to 20° and depression is limited to 10°.

e. Special Instructions in the Manual.

(1) Refer to paragraph 2-2, Controls, Indicators, and Equipment.

(2) Refer to chapter 2, section VI, TOW/Armament Carrier Operation.

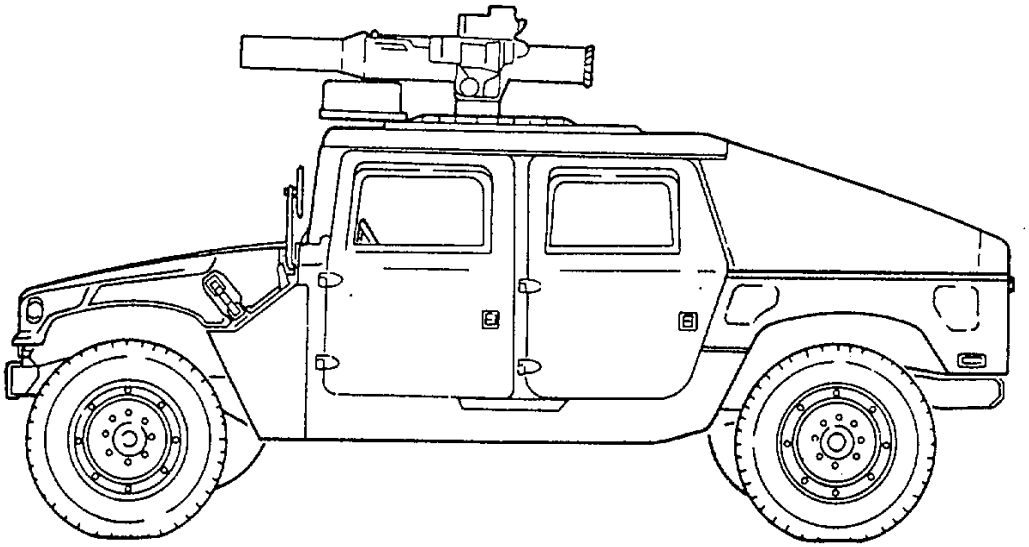

M1045 AND M1045A1

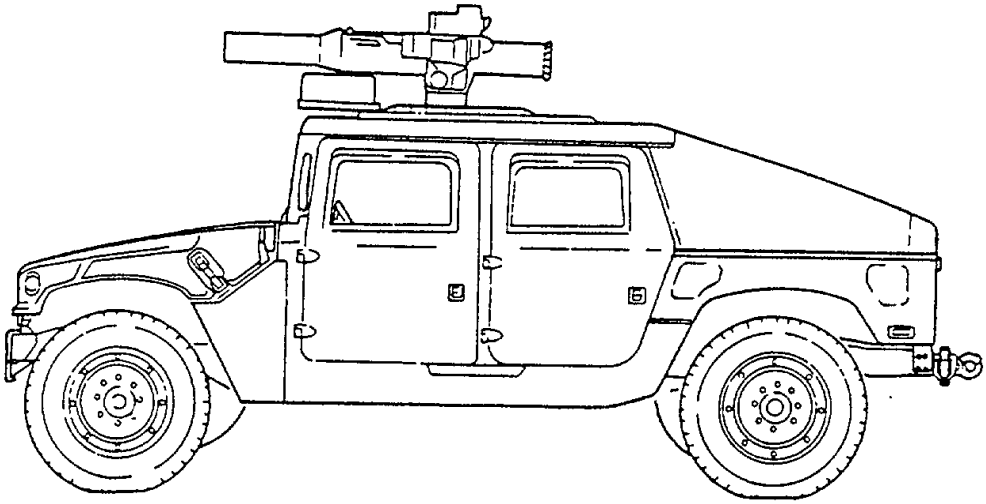

M1045A2

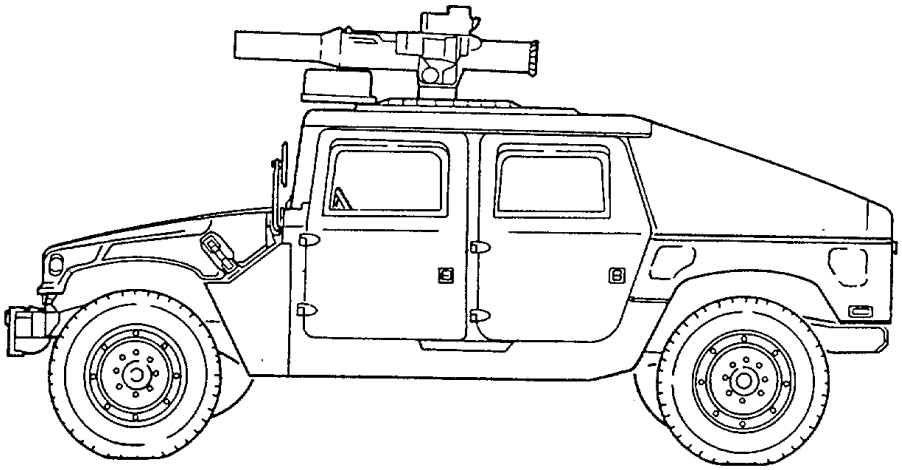

M1046 AND M1046A1 W/WINCH

1-13. ARMAMENT CARRIERS, ARMORED (M1025, M1025A1, M1025A2, M1026, AND M1026A1)

a. Differences. The difference between the M1025, M1025A1, and M1025A2 armament carriers and the M1026 and M1026A1 armament carriers is that the M1025 and M1025A1 do not have winches and the M1026 and M1026A1 do. The A2 models have new bumpers, which make the vehicles slightly longer. A 9,000 lb winch is also available for the A2 models as an option. These differences affect:

- Vehicle Length
- Vehicle Weight
- Shipping Dimensions
- Approach Angle
- Special Winch-Assisted Operations

It does not affect the basic purpose, performance, or special limitations of the vehicles.

b. Purpose of the Vehicle. The M1025, M1025A1, M1025A2, M1026, and M1026A1 armament carriers provide mounting and firing of the MK19 automatic grenade launcher; M2, caliber .50 machine gun; and M60, 7.62 mm machine gun; ring-mounted with 360° arc of fire, with armor protection for crew, weapon components, and ammunition. The M1026 and M1026A1 are equipped with winches. This feature permits recovery operations of similar vehicles. c. Performance. Fully-loaded M1025, M1025A1, M1025A2, M1026, and M1026A1 armament carriers will climb road grades as steep as 60% (31°) and traverse a side slope of up to 40% (22°). The vehicles ford hard bottom water crossings up to 30 inches (76 centimeters) without a deep water fording kit and 60 inches (152 centimeters) with the kit. Refer to table 1-15 for cruising range.

d. Special Limitations. None.

e. Special Instructions in the Manual.

(1) Refer to paragraph 2-2, Controls, Indicators, and Equipment.

(2) Refer to chapter 2, section VI, TOW/Armament Carrier Operation.

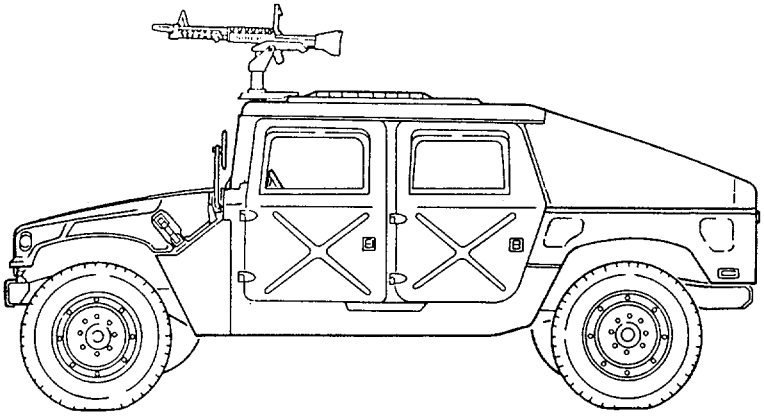

M1025 AND M1025A1
(WITH M60, 7.62 MM MACHINE GUN MOUNTED)

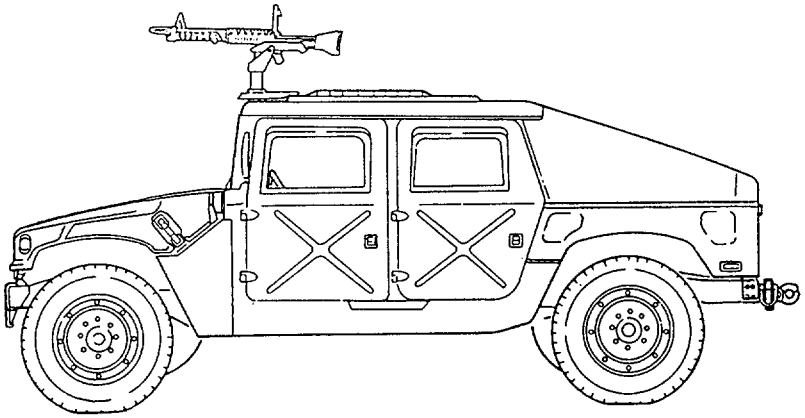

M1025A2
(WITH M60, 7.62 MM MACHINE GUN MOUNTED)

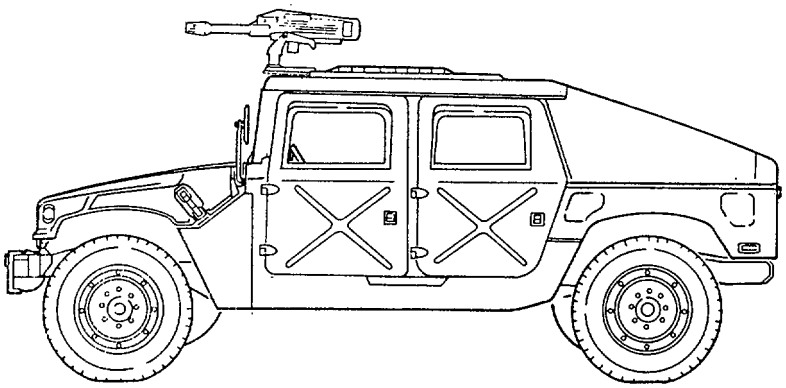

M1026 AND M1026A1 W/WINCH
(WITH MK19 GRENADE LAUNCHER MOUNTED)

1-14. ARMAMENT CARRIERS, W/SUPPLEMENTAL ARMOR (M1043, M1043A1, M1043A2, M1044, AND M1044A1)

a. Differences. The difference between the M1043, M1043A1, and M1043A2 armament carriers w/supplemental armor and M1044 and M1044A1 armament carriers w/supplemental armor is that the M1043, and M1043A1, do not have winches and the M1044 and M1044A1 do. The A2 models have new bumpers which make the vehicles slightly longer. A 9,000 lb winch is also available for the A2 models as an option. These differences affect:

- Vehicle Length
- Vehicle Weight
- Shipping Dimensions
- Approach Angle
- Special Winch-Assisted Operations

It does not affect the basic purpose, performance, or special limitations of the vehicles.

b. Purpose of the Vehicle. The M1043, M1043A1, M1043A2, M1044, and M1044A1 armament carriers w/supplemental armor provide added ballistic protection for armament components, crew, and ammunition. The M1044 and M1044A1 are equipped with winches. This feature permits recovery operations of similar vehicles.

c. Performance. Fully-loaded M1043, M1043A1, M1043A2, M1044, and M1044A1 armament carriers w/supplemental armor will climb road grades as steep as 60% (31°) and traverse a side slope of up to 40% (220). The vehicles ford hard bottom water crossings up to 30 inches (76 centimeters) without a deep-water fording kit and 60 inches (152 centimeters) with the kit. Refer to table 1-15 for cruising range.

d. Special Limitations. None.

e. Special Instructions in the Manual.

(1) Refer to paragraph 2-2, Controls, Indicators, and Equipment.

(2) Refer to chapter 2, section VI, TOW/Armament Carrier Operation.

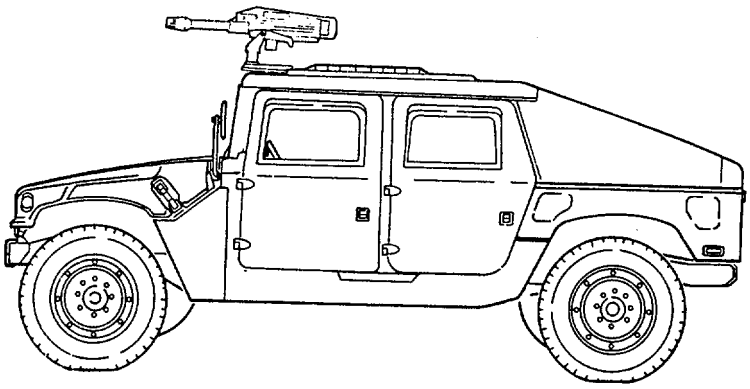

M1043 AND M1043A1
(WITH MK19 GRENADE LAUNCHER MOUNTED)

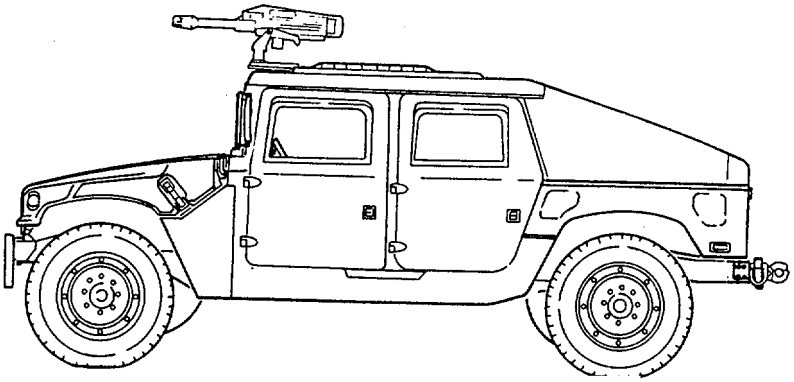

M1043A2
(WITH MK19 GRENADE LAUNCHER MOUNTED)

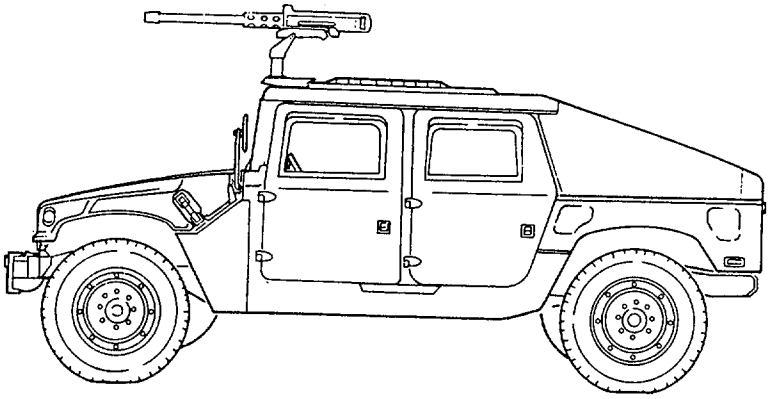

M1044 AND M1044AI W/WINCH
(WITH M2, CAUBER .50 MACHINE GUN MOUNTED)

1-15. S250 SHELTER CARRIERS (M1037 AND M1042)

a. Differences. The only difference between the M1037 shelter carrier and the M1042 shelter carrier is that the M1037 does not have a winch and the M1042 does. This difference affects:

- Vehicle Length
- Vehicle Weight
- Shipping Dimensions
- Approach Angle
- Special Winch-Assisted Operations

It does not affect the basic purpose, performance, or special limitations of the vehicles.

b. Purpose of the Vehicle. The M1037 and M1042 shelter carriers provide the capability to secure and transport the S250 electrical equipment shelter with a total payload (including crew) of 3,600 pounds (1,634 kilograms). The M1042 is equipped with a winch. This feature permits recovery operations of similar vehicles.

c. Performance. Fully-loaded M1037 and M1042 shelter carriers will climb road grades as steep as 60% (31°) and traverse a side slope of up to 40% (22°). The vehicles ford hard bottom water crossings up to 30 inches (76 centimeters) without a deepwater fording kit and 60 inches (152 centimeters) with the kit. Refer to table 1-15 for cruising range.

d. Special Limitations. None.

e. Special Instructions in the Manual.

(1) Refer to paragraph 2-2, Controls, Indicators, and Equipment.

(2) Refer to chapter 2, section V, Cargo/Troop Carrier and S250 Shelter Carrier Operation.

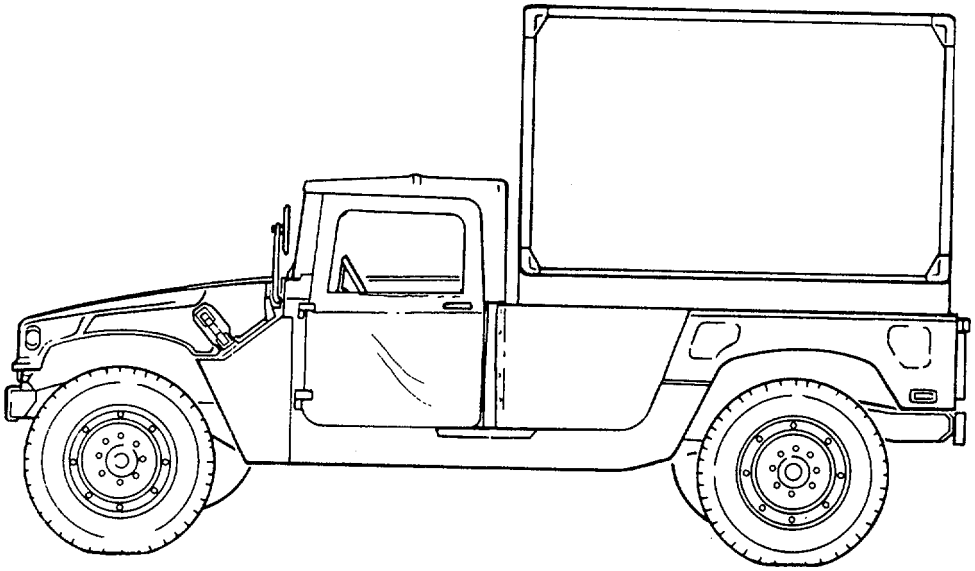

M1037

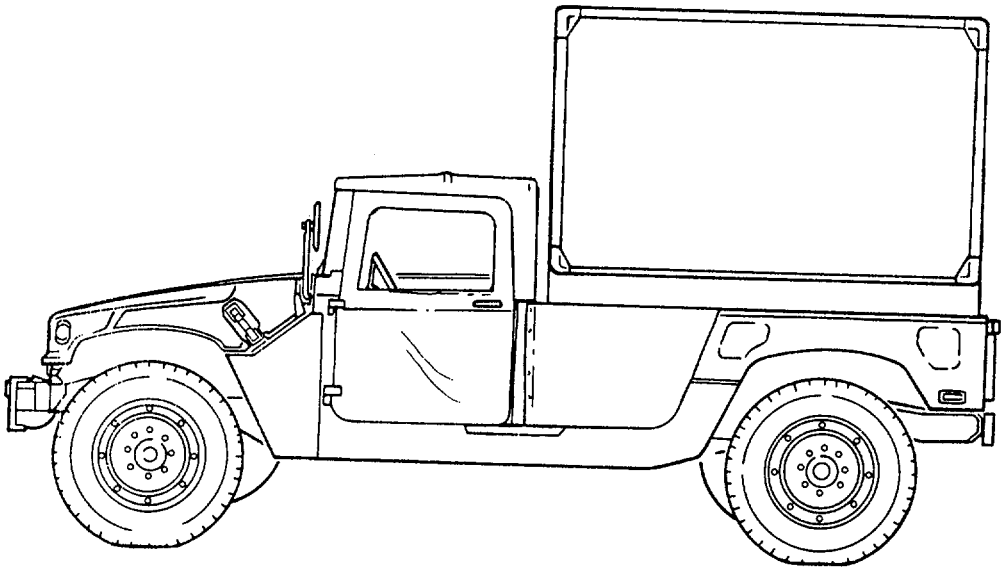

M1042 W/WINCH

1-16. 2-ULITTER AMBULANCES, ARMORED (M996 AND M996A1); 4-LITTER AMBULANCES, ARMORED (M997, M997A1, AND M997A2)

a. Differences. The M996 and M996A1 are armored 2-litter ambulances. The M997, M997A1, and M997A2 are 4-litter ambulances with armor protection and air conditioning for crew and patients. The A2 models have new bumpers, which make the vehicles slightly longer. A 9,000 lb winch is also available for the A2 models as an option. These differences affect:

- Approach Angle
- Special Winch-Assisted Operations
- Vehicle Length
- Vehicle Weight
- Shipping Dimensions

b. Purpose of the Vehicle.

(1) M996 and M996A1 Armored 2-Litter Ambulances. The M996 and M996A1 ambulances are capable of transporting up to two litter patients, six ambulatory patients, or a combination of litter and ambulatory patients. Additionally, medical personnel, equipment, and a driver can be accommodated in the vehicle. The patient compartment is heated with a vehicle-mounted fuel burning heater. For operation in an NBC environment, the M996 and M996A1 are equipped with a Gas-Particulate Filter Unit (GPFU) with heaters capable of supporting up to five personnel equipped with either M25 series protective masks or M13 series patient protective masks. The GPFU forces temperature-controlled, filtered air to the mask facepieces, which increases protection, eases breathing, and reduces stress and heat fatigue during extended periods of NBC operation.

(2) M997, M997A1, and M997A2 Armored 4-Litter Ambulances. The M997, M997A1, and M997A2 ambulances are capable of transporting up to four litter patients, eight ambulatory patients, or a combination of litter and ambulatory patients. Additionally, medical personnel, equipment, and a driver can be accommodated in the vehicle. The ambulance can be heated, ventilated, or air conditioned, depending on environmental conditions. For operation in an NBC environment, the M997, M997A1, and M997A2 are equipped with a Gas-Particulate Filter Unit (GPFU) with heaters capable of supporting up to seven personnel equipped with either M25 series protective masks or M13 series patient protective masks. The GPFU forces temperature-controlled, filtered air to the mask facepieces, which increases protection, eases breathing, and reduces stress and heat fatigue during extended periods of NBC operation.

c. Performance. Fully-loaded M996, M996A1, M997, M997A1, and M997A2 ambulances will climb road grades as steep as 60% (31°) and traverse a side slope of up to 40% (220). The vehicles ford hard bottom water crossings up to 30 inches (76 centimeters) without a deep water fording kit and 60 inches (152 centimeters) with the kit. Refer to table 1-15 for cruising range.

d. Special Limitations. None.

e. Special Instructions in the Manual.

(1) Refer to paragraph 2-2, Controls, Indicators, and Equipment.

(2) Refer to chapter 2, section VII, Ambulance Operation.

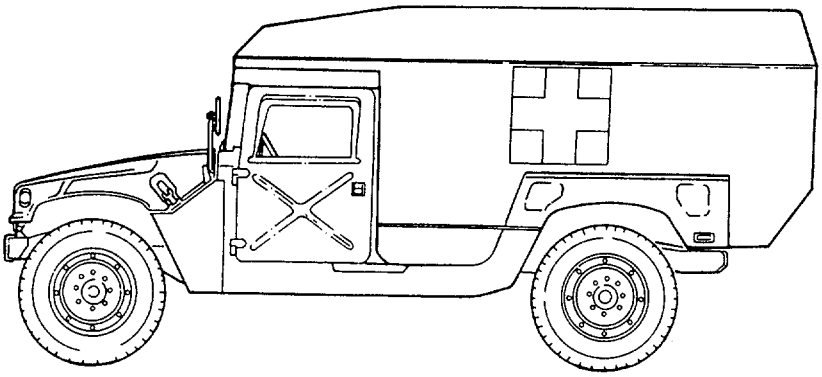

M996 AND M996A1

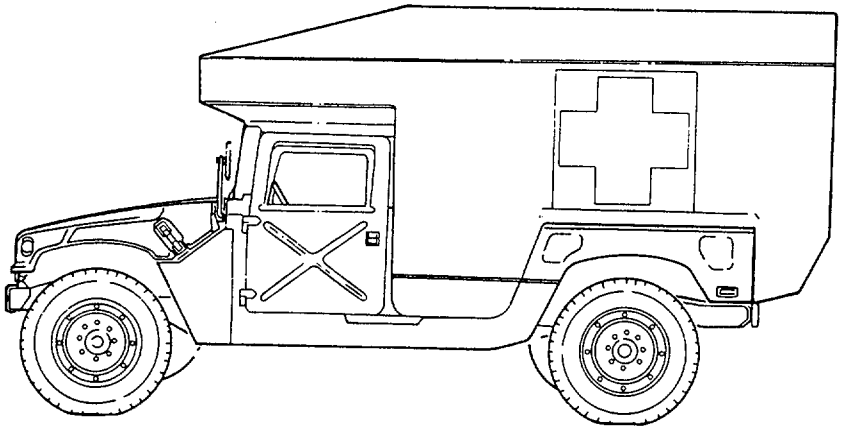

M997 AND M997A1

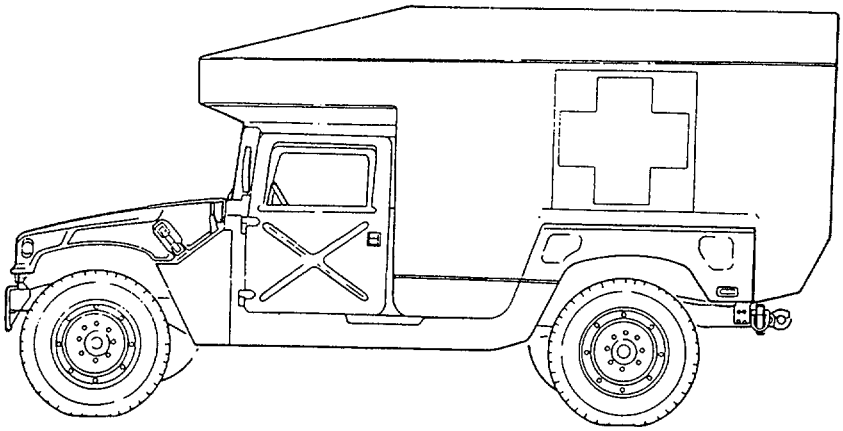

M997A2

1-17. 2-LITTER AMBULANCES, SOFT TOP (M1035, M1035A1, AND M1035A2)

a. Differences. The difference between the M1035, M1035A1, and M1035A2 2-litter soft top ambulances is that the M1035A2 is longer, due to new bumpers, and can be equipped with an optional 9,000 lb winch. These differences affect:

- Approach Angle
- Special Winch-Assisted Operations
- Vehicle Length
- Vehicle Weight
- Shipping Dimensions

b. Purpose of the Vehicle. The M1035, M1035A1, and M1035A2 ambulances are 2-litter soft tops which have no armor protection for crew and patients.

c. Performance. Fully-loaded M1035,'M1035A1, and M1035A2 ambulances will climb road grades as steep as 60% (31°) and traverse a side slope of up to 40% (22°). The vehicles ford hard bottom water crossings up to 30 inches (76 centimeters) without a deep water fording kit and 60 inches (152 centimeters) with the kit. Refer to table 1-15 for cruising range.

d. Special Limitations. None.

e. Special Instructions in the Manual.

(1) Refer to paragraph 2-2, Controls, Indicators, and Equipment.

(2) Refer to chapter 2, section VII, Ambulance Operation.

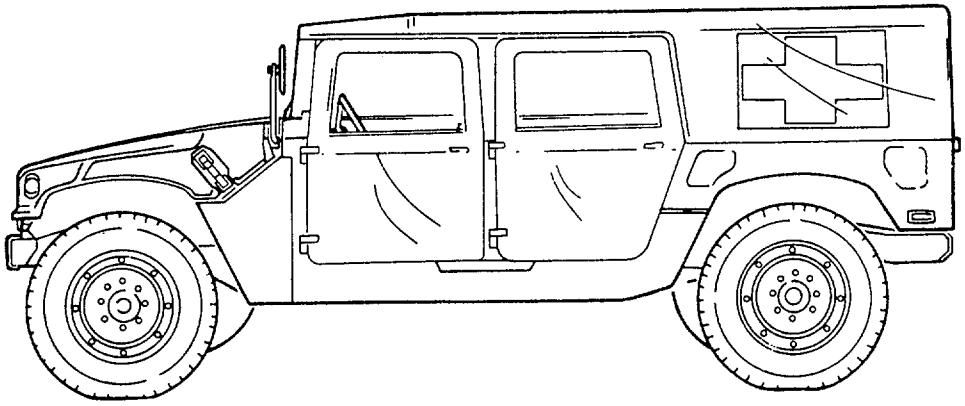

M1035 AND M1035A1

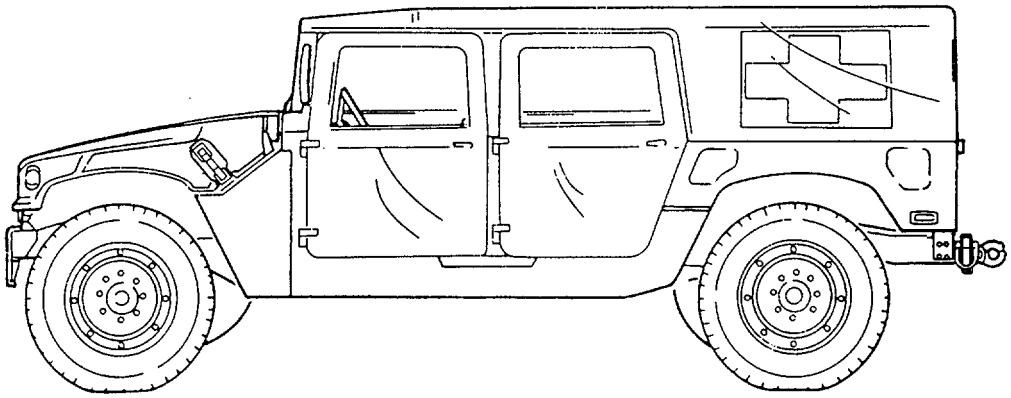

M1035A2

1-18. TABULATED DATA

This paragraph organizes vehicle specifications, special equipment, and model differences in table form for easy reference by operators.

Table 1-1. Differences Between Models

Equipment/Function	M966, M966A1, M1121	M996, M996A1	M997, M997A1, M997A2	M998, M998A1	M1025, M1025A1, M1025A2	M1026, M1026A1	M1035, M1035A1, M1035A2	M1036	M1037	M1038, M1038A1	M1042	M1043, M1043A1, M1043A2	M1044, M1044A1	M1045, M1045A1, M1045A2	M1046, M1046A1	M1097, M1097A1, M1097A2, M1123
Personnel/Cargo Operations				x						x						x
TOW Launcher Mounting	x							x						x	x	
Armament Mounting					x	x						x	x			
S250 Shelter Configuration									x		x					x
Ambulance:																
Two Litter Patients		x					x									
Four Litter Patients			x													
Eight Ambulatory Patients			x													
Six Ambulatory Patients		x														
Two Litter and Four Ambulatory Patients			x													
One Litter and Three Ambulatory Patients		x														
Vehicle Winch			*		*	x	*	x		x	x	*	x	*	x	*
Communications:																
AN/GRC-160	x	x	x	x	x	x		x		x		x	x	x	x	
AN/VRC-12 Series				x						x						
Collective NBC Protection		x	x													
Basic Armor	x	x	x		x	x		x								
Supplemental Armor												x	x	x	x	
Howitzer Prime Mover																x

* Identifies an optional winch available for A2 models.

Table 1-2. Capacities

Vehicle	Description	Capacity	
		Standard	Metric
All	Cooling system	26 qt	24.6 L
All	Engine (crankcase only)	7 qt	6.6 L
All	Engine (crankcase with new filter)	8 qt	7.6 L
All	Differential (each)	2 qt	1.9 L
All (Except M1123 and A2)	Transmission (3L80) (drain and refill)	6 qt	5.7 L
M1123 and A2 Series Vehicles	Transmission (4L80-E) (drain and refill)	7.7 qt	7.3 L
All (Except M1097, A1, A2, and M1123 Series Vehicles)	Transfer case (218)	3.5 qt	3.3 L
M1097, A1, A2, and M1123 Series Vehicles	Transfer case (242)	3.35 qt	3.17 L
All	Fuel tank	25 gal.	94.6 L
All	Steering system	1 qt	0.95 L
All	Steering system (with steering cooler)	1.25 qt	1.18 L
All (Except M1097, A1, A2, and M1123 Series Vehicles)	Brake master cylinder	0.69 pt	0.33 L
M1097, A1, A2, and M1123 Series Vehicles	Brake master cylinder	1.12 pt	0.53 L
All (Except M1097, A1, A2, and M1123 Series Vehicles)	Total brake system	1.2 pt	0.57 L
M1097, A1, A2, and M1123 Series Vehicles	Total brake system	1.63 pt	0.77 L
All	Windshield washer	1 qt	0.95 L
All	Geared hub	1 pt	0.47 L

Table 1-3. General Service Data

Vehicle	Description	Expected Temperatures		
		Above +15° (above -9°C)	+40° to -15°F (+4° to -26°C)	+40° to -65°F (+4° to -54°C)
All	Cooling system	1/4 ethylene glycol, 3/4 water	2/5 ethylene glycol, 3/5 water	3/5 ethylene glycol, 2/5 water
All	Engine	OE/HDO 30	OE/HDO 10	OEA
All	Fuel tank	DF1, DF2	DF1	DF1, DFA*
		All Temp. Alternate JP-8		
All	Differentials	GO 80/90	GO 80/90	GO 75
All	Geared hubs	GO 80/90	GO 80/90	GO 75
All	Transmission (3L80)	Dexron® II or Dexron® III	Dexron® II or Dexron® III	Dexron® II or Dexron® III
	Transmission (4L80-E)	Dexron® III	Dexron® III	Dexron® III
All	Transfer case	Dexron® II or Dexron® III	Dexron® II or Dexron® III	Dexron® II or Dexron® III
All	Steering system	Dexron® II or Dexron® III	Dexron® II or Dexron® III	Dexron® II or Dexron® III
All	Brake system	Brake Fluid Silicone (BFS)	Brake Fluid Silicone (BFS)	Brake Fluid Silicone (BFS)
All	Windshield washer reservoir	1/3 cleaning compound, 2/3 water	1/2 cleaning compound, 1/2 water	2/3 cleaning compound, 1/3 water

* Use below -20°F (-29°C)

Table 1-4. Engine Data (6.2 L)

Type	6.2 liter diesel, naturally-aspirated, liquid-cooled
Cylinders	8(V)
Brake horsepower	150 horsepower @ 3600 rpm
Idle speed (engine rpm)	650 ± 25 rpm
Operating speed (engine rpm)	1500-2300 rpm
Oil pressure at idle	15 psi (103 kPa)
Normal operating oil pressure	40-50 psi (276-345 kPa)

Table 1-5. Engine Data (6.5 L)

Type	6.5 liter diesel, naturally-aspirated, liquid-cooled
Cylinders	8(V)
Brake horsepower	160 horsepower @ 3400 rpm
Idle speed (engine rpm)	725 ± 25 rpm
Operating speed (engine rpm)	1500-2300 rpm
Oil pressure at idle	10 psi (69 kPa)
Normal operating oil pressure	40-50 psi (276-345 kPa)

Table 1-6. Cooling System Data

Surge tank cap pressure	15 psi (103 kPa)
Thermostat:	
Starts to open	190°F (88°C)
Fully open	212°F (100°C)
Radiator	Downflow type
Fan	10 blade, 19 inch (48 cm)
Normal operating coolant temperature	190°-230°F (88°-110°C)

Table 1-7. Transmission Data (3L80)

General Information	
Model	Turbo Hydra-Matic 3L80
Type	Three-speed automatic
Oil type	Dexron® II
Transmission Range Selection	
Recommended Shift Lever Position	**Operating Condition**
"R" (reverse)	Clear of traffic and obstructions, using ground guide.
'N" (neutral)	Vehicle stopped with parking brake applied.
"D" (drive)	Normal driving and fording.
"2" (second)	Hill climbing and “engine braking" to slow vehicle when descending steep hills.
"1" (first)	Maximum "engine braking" when descending very steep hills, climbing steep hills, or driving through deep mud, sand, or snow.

Table 1-8. Transmission Data (4L80-E)

General Information	
Model	Turbo Hydra-Matic 4L80-E
Type	Four-speed automatic
Oil type	Dexron® III
Transmission Range Selection	
Recommended Shift Lever Position	**Operating Condition**
"P" (park) "R" (reverse) "N" (neutral) "Ⓓ" (overdrive)	Vehicle stopped with parking brake applied. Clear of traffic and obstructions, using ground guide. Vehicle stopped with parking brake applied. Normal driving and fording.
“D” (drive)	Hilly terrain and towing a trailer.
"2" (second)	Hill climbing and “engine braking" to slow vehicle when descending steep hills.
"1" (first)	Maximum "engine braking" when descending very steep hills, climbing steep hills, or driving through deep mud, sand, or snow.

Table 1-9. Transfer Case Data (218)

General Information	
Model	New Process Gear 218 (MOD)
Type	Two-speed, locking, chain driven
Oil type	Dexron® II
CAUTION **Damage to drivetrain will occur if transfer case ranges are not selected properly. Refer to paragraph 2-11, Placing Vehicle in Motion, and paragraph 2-29, Operating on Unusual Terrain, for specific instructions.**	
Transfer Case Range Selection	
Recommended Shift Lever Position	**Operating Condition**
"H" (high range)	This drive range shall be selected whenever possible. High range should be used when operating on all primary, secondary, and off-road surfaces, where little or no wheel slippage exists. This range is also to be used when encountering sharp, continuous turns on high traction surfaces.
"H/L" (high lock range)	This drive range shall be selected only when continuous wheel slippage is evident; i.e., when operating in mud, snow, loose sand, or on ice, and increased control or additional traction is required.
"L" (low range)	This drive range shall be selected only when high ranges do not provide sufficient power to negotiate steep hills or downgrades. This range shall also be used when the vehicle is mired and cannot be extracted using the high lock range.
"N" (neutral)	Vehicle is disabled and must be towed.

Table 1-10. Transfer Case Data (242)

General Information	
Model	New Process Gear 242 (MOD)
Type	Two-speed, locking, chain driven
Oil type	Dexron® II
CAUTION **Damage to drivetrain will occur if transfer case ranges are not selected properly. Refer to paragraph 2-11 for specific instructions on Placing Vehicle in Motion, and paragraph 2-29, Operating on Unusual Terrain.**	
Transfer Case Range Selection	
Recommended Shift Lever Position	**Operating Condition**
"H" (high range)	This drive range shall be selected whenever possible. High range should be used when operating on all primary, secondary, and off-road surfaces, where little or no wheel slippage exists. This range is also to be used when encountering sharp, continuous turns on high traction surfaces.
"H/L" (high lock range)	This drive range shall be selected for off- highway hilly terrain or when continuous wheel slippage is evident; i.e., when operating in mud, snow, loose sand, or on ice, and increased control or additional traction is required.
"L" (low range)	This drive range shall be selected only when high ranges do not provide sufficient power to negotiate steep hills or downgrades. This range shall also be used when the vehicle is mired and cannot be extracted using the high lock range.
"N" (neutral)	Vehicle is disabled and must be towed.

Table 1-11. Maximum Vehicle Operating Speeds (3L80 Transmission)

Transmission Range Selection	Transfer Case Range Selection		
	"L" Low Range	**"H" High Range**	**"H/L" High Lock Range**
"R" (reverse)	11 mph (18 kph)	29 mph (47 kph)	11 mph (18 kph)
"D" (drive)	27 mph (43 kph)	55 mph (88 kph)	55 mph (88 kph)
"2" (second)	19 mph (31 kph)	48 mph (77 kph)	48 mph (77 kph)
"1" (first)	11 mph (18 kph)	29 mph (47 kph)	29 mp (47 kph)

Table 1-12. Maximum Vehicle Operating Speeds (4L80-E Transmission)

Transmission Range Selection	Transfer Case Range Selection		
	"L" Low Range	**"H" High Range**	**"H/L" High Lock Range**
"R" (reverse)	11 mph (18 kph)	29 mph (47 kph)	11 mph (18 kph)
"D" (overdrive)	27 mph (43 kph)	55 mph (88 kph)	55 mph (88 kph)
"D" (drive)	27 mph (43 kph)	55 mph (88 kph)	55 mph (88 kph)
"2" (second)	19 mph (31 kph)	48 mph (77 kph)	48 mph (77 kph)
"1" (first)	11 mph (18 kph)	29 mph (47 kph)	29 mph (47 kph)

Table 1-13. Vehicle Dimensions (All except M1123 and A2 Vehicles)

Vehicle	Length Overall		Height Overall*		Height Minimum Reducible	
	Inches	Centimeters	Inches	Centimeters	Inches	Centimeters
M966/M966A1	180	457	73	185	71	180
			69**	175		
M996/M996A1	202	513	86	218	77	196
M997/M997A1	202	513	102	259	102	259
M998/M998A1	180	457	69	175	55	140
M1025/M1025A1	180	457	73	185	71	180
			69**	175		
M1026/M1026A1	185	470	73	185	71	180
			69**	175		
M1035/M1035A1	180	457	69	175	55	140
M1036	185	470	73	185	71	180
			69**	175		
M1037	189	480	69	175	55	140
M1038/M1038A1	185	470	69	175	55	140
M1042	185	470	69	175	55	140
M1043/M1043A1	180	457	73	185	71	180
			69**	175		
M1044/M1044A1	185	470	73	185	71	180
			69**	175		
M1045/M1045A1	180	457	73	185	71	180
			69**	175		
M1046/M1046A1	185	470	73	185	71	180
M1097/M1097A1	180	457	69**	175	55	140
M1121	180	457	73	185	71	180

Vehicle	Width Overall		Ground Clearance			
			Under Axle		Under Chassis	
	Inches	Centimeters	Inches	Centimeters	Inches	Centimeters
All	85	216	16	41	24	61

* Height covers basic vehicle only.
** Height when weapon station is removed.

Table 1-14. Vehicle Dimensions (M1123 and A2 Vehicles)

Vehicle	Length Overall		Height Overall*		Height Minimum Reducible	
	Inches	Centimeters	Inches	Centimeters	Inches	Centimeters
M997A2	204.5	519.5	102	259	102	259
M1025A2	190.5	483.9	73	185	71	180
			69**	175		
M1035A2	190.5	483.9	69	175	55	140
M1043A2	190.5	483.9	73	185	71	180
			69**	175		
M1045A2	190.5	483.9	73	185	71	180
			69**	175		
M1097A2	190.5	483.9	69	175	55	140
M1123	182.5	463.6	69	175	55	140

	Width Overall		Ground Clearance			
			Under Axle		Under Chassis	
Vehicle	Inches	Centimeters	Inches	Centimeters	Inches	Centimeters
All	85	216	16	41	24	61

* Height covers basic vehicle only.
** Height when weapon station is removed.

Table 1-15. Vehicle Cruising Range

NOTE

When vehicle is driven on hard surface and hilly terrain at a speed of 30-40 mph (48-64 kph), the ranges shown in this table can be expected when using bias ply tires. Cruising range may increase by approximately 30 miles (48 km) when using radial tires.

Vehicles	Gross Vehicle Weight (GVW)	Cruising Range
M998, M1035, M1038	7,700 lb (3,496 kg)	337 mi (542 km)
M966, M1025, M1026, M1036, M1121	8,200 lb (3,723 kg)	320 mi (515 km)
M1043, M1044, M1045, M1046	8,400 lb (3,814 kg)	312 mi (502 km)
M996, M1037, M1042	8,660 lb (3,932 kg)	300 mi (483 km)
M997	9,100 lb (4,131 kg)	275 mi (442 km)
M1097	10,000 lb (4,540 kg)	275 mi (442 km)
M998A1, M1035A1, M1038A1	7,880 lb (3,578 kg)	337 mi (542 km)
M966A1, M1025A1, M1026A1	8,380 lb (3,805 kg)	320 mi (515 km)
M1043A1, M1044A1, M1045A1, M1046A1	8,580 lb (3,895 kg)	312 mi (502 km)
M996A1	8,840 lb (4,013 kg)	300 mi (483 km)
M997A1	9,280 lb (4,213 kg)	275 mi (442 km)
M1097A1	10,000 lb (4,540 kg)	275 mi (442 km)
M1035A2	10,300 lb (4,676 kg)	337 mi (542 km)
M1025A2	10,300 lb (4,676 kg)	320 mi (515 km)
M1043A2, M1045A2	10,300 lb (4,676 kg)	312 mi (502 km)
M997A2	9,280 lb (4,213 kg)	275 mi (442 km)
M1097A2, M1123	10,300 lb (4,676 kg)	275 mi (442 km)

Table 1-16 6,000 lb Winch Data

Vehicle	Description	Capacities	
		Standard	Metric
M1026, M1036, M1038, M1042, M1044, M0146, M1026A1, M1038A1, M1044A1, M1046A1	Max. Load (Fifth Layer)	3,360 lb	1,525 kg
	Max. Load (Fourth Layer)	3,780 lb	1,716 kg
	Max. Load (Third Layer)	4,310 lb	1,957 kg
	Max. Load (Second Layer)	5,020 lb	2,279 kg
	Max. Load (First Layer)	6,000 lb	2,724 kg

Table 1-17. 9,000 lb Winch Data (Optional)

Vehicle	Description	Capacities	
		Standard	Metric
M1097A2, M1025A2, M1043A2, M1123, M1045A2, M997A2, M1035A2	Max. Load (Fifth Layer)	6,200 lb	2,815 kg
	Max. Load (Fourth Layer)	7,000 lb	3,178 kg
	Max. Load (Third Layer)	8,000 lb	3,632 kg
	Max. Load (Second Layer)	8,500 lb	3,859 kg
	Max. Load (First Layer)	9,000 lb	4,086 kg

Table 1-17.1. 10,500 lb Winch Data (Optional)

Vehicle	Description	Capacities	
		Standard	Metric
All vehicles except M1097A2, M1025A2, M1043A2, M1123, M1045A2, M997A2, M1035A2	Max. Load (Fifth Layer)	9,620 lb	4,367 kg
	Max. Load (Fourth Layer)	8,700 lb	3,950 kg
	Max. Load (Third Layer)	6,800 lb	3,087 kg
	Max. Load (Second Layer)	5,600 lb	2,542 kg
	Max. Load (First Layer)	4,700 lb	2,134 kg

Table 1-18. Curb Weight

Vehicle	Curb Weight	Vehicle	Curb Weight
M998	5,200 lb (2,361 kg)	M997	7,180 lb (3,260 kg)
M1038	5,327 lb (2,418 kg)	M1045	6,438 lb (2,923 kg)
M966	6,051 lb (2,747 kg)	M1046	6,565 lb (2,981 kg)
M1025	5,960 lb (2,706 kg)	M1043	6,411 lb (2,911 kg)
M1026	6,087 lb (2,763 kg)	M1044	6,538 lb (2,968 kg)
M1037	5,425 lb (2,463 kg)	M1035	5,297 lb (2,405 kg)
M996	6,748 lb (3,064 kg)	M1042	5,551 lb (2,520 kg)
M1036	6,178 lb (2,805 kg)	M1097	5,600 lb (2,542 kg)
M998A1	5,380 lb (2,443 kg)	M997A1	7,360 lb (3,341 kg)
M1038A1	5,507 lb (2,500 kg)	M1045A1	6,618 lb (3,005 kg)
M966A1	6,231 lb (2,829 kg)	M1046A1	6,745 lb (3,062 kg)
M1025A1	6,140 lb (2,788 kg)	M1043A1	6,591 lb (2,992 kg)
M1026A1	6,267 lb (2,845 kg)	M1044A1	6,718 lb (3,050 kg)
M996A1	6,928 lb (3,145 kg)	M1035A1	5,477 lb (2,487 kg)
M1097A1	5,600 lb (2,542 kg)	M1025A2	6,780 lb (3,078 kg)
M1045A2	7,258 lb (3,295 kg)	M1043A2	7,230 lb (3,282 kg)
M1097A2	5,900 lb (2,679 kg)	M1035A2	6,100 lb (2,769 kg)
M997A2	7,660 lb (3,478 kg)	M1121	6,051 lb (2,747kg)
M1123	5,900 lb (2,679 kg)		

NOTE

Refer to FM 5-36 for information on trailer weights.

Table 1-19. Vehicle Bridge Classification

Model	Empty	Loaded	
		Cross-Country	Highway
M966, M966A1, M996, M996A1, M997, M997A1, M997A2, M998, M998A1, M1025, M1025A1, M1025A2, M1026, M1026A1, M1036, M1044, M1044A1, M1045, M1045A1, M1045A2, M1046, M1046A1, M1121	3	4	4
M1035, M1035A1, M1035A2	2	3	3
M1037, M1038, M1038A1, M1042, M1043, M1043A1, M1043A2, M1097, M1097A1, M1097A2, M1123	2	4	4

CHAPTER 2
OPERATING INSTRUCTIONS

Section I. DESCRIPTION AND USE OF OPERATOR'S CONTROLS AND INDICATORS

2-1. KNOW YOUR CONTROLS AND INDICATORS

Before you attempt to operate your equipment, be sure you are familiar with the location and function of all controls and indicators. The location and function of the controls and indicators are described in this section.

WARNING

- This vehicle has been designed to operate safely and efficiently within the limits specified in this TM. Operation beyond these limits is prohibited IAW AR 750-1 without written approval from the Commander, U.S. Army Tank-automotive and Armaments Command, ATTN: AMSTA-CM-S, Warren, MI 48397-5000.

- Do not use the hand throttle as an automatic speed or cruise control. The hand throttle does not automatically disengage when brake is applied, resulting in increased stopping distances and possible hazardous and unsafe operation. Injury to personnel or damage to equipment may result.

NOTE

- Except where noted, the controls and indicators in this section are applicable to all vehicles covered in this manual.

- In this manual, the term “left" indicates the driver side of the vehicle. The term "right" indicates the opposite side of the vehicle.

2-2. CONTROLS, INDICATORS, AND EQUIPMENT

a. Driver's Compartment.

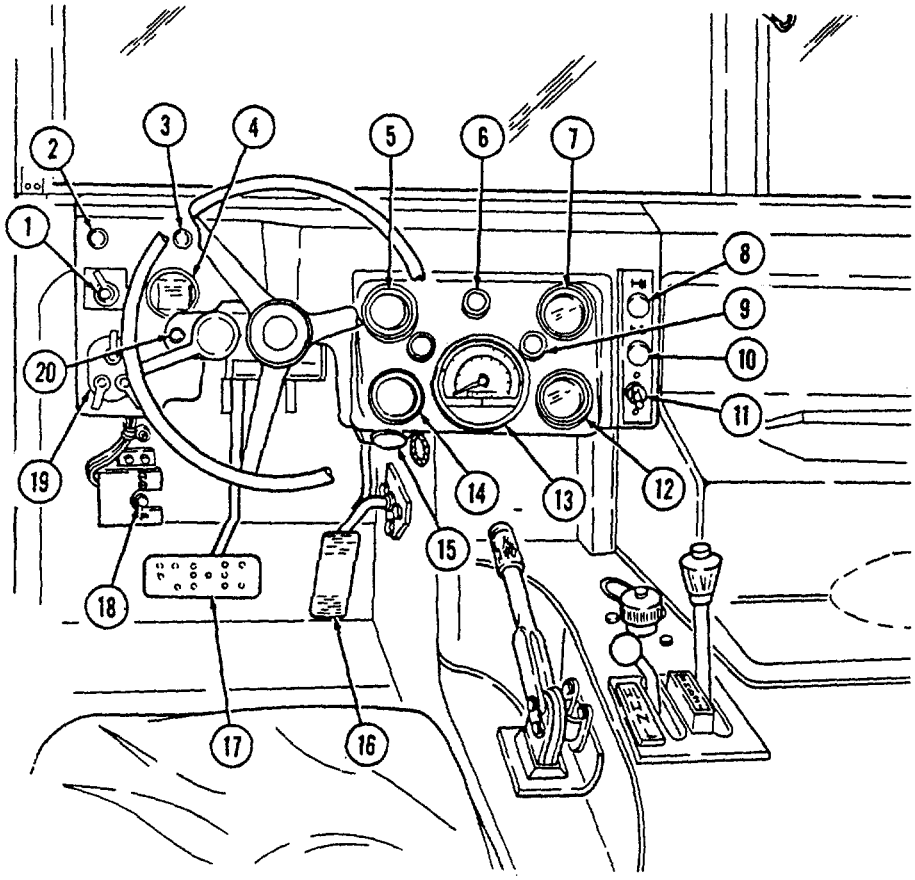

KEY	ITEM AND FUNCTION
1	*Rotary switch* has “ENG STOP," 'RUN," and “START." When positioned to "RUN," glow plugs are activated to heat engine precombustion chambers. When positioned to “START," the starter will engage and crank the engine.
2	*Wait-to-start lamp assembly* illuminates when glow plugs are activated, goes out when engine is ready to be started.
3	*Brake warning lamp assembly* illuminates if parking brake is applied or if a hydraulic imbalance (leak, etc.) exists between the front and rear brake systems.
4	*Air restriction gauge signals* the operator that a restriction exists in the air cleaner.

KEY	ITEM AND FUNCTION
5	*Engine oil pressure gauge* indicates the oil pressure when the engine is running.
6	*High beam lamp assembly* illuminates when front headlights are switched to high beam position.
7	*Coolant temperature gauge* indicates engine coolant temperature.
8	*Defroster control knob* directs heated air to the windshield for defrosting.
9	*Instrument panel lights* illuminate instrument panel gauges.
10	*Heater control knob* varies temperature of heated air into vehicle.
11	*Heater fan switch* controls the blower motor speed. The switch has “HI” (high), "OFF", and 'LO" (low) settings to regulate defroster and heater air flow into vehicle.
12	*Voltmeter* indicates the charging level and activity of the battery charging system.
13	*Speedometer/odometer* indicates vehicle speed and accumulated mileage.
14	*Fuel gauge* indicates amount of fuel in fuel tank.
15	*Hand throttle* increases engine speed for use during cold weather starting, winch operation, deep water fording, and to obtain maximum alternator output for communications/electrical requirements, and is not to be used as an automatic speed or cruise control.
16	*Accelerator pedal* is the operator's foot control for varying engine speed.
17	*Service brake pedal* is depressed to slow or stop vehicle.
18	*Dimmer switch* permits the operator to select high or low headlight beam.
19	*Light switch* controls operation of vehicle service lights and blackout lights.
20	*Directional signal /emergency flasher indicator light* illuminates during directional signal or emergency flasher use.

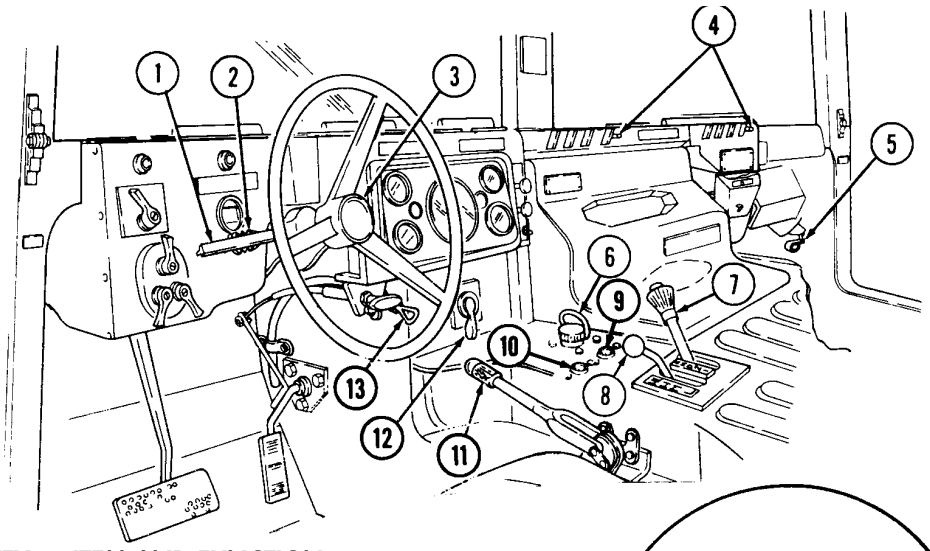

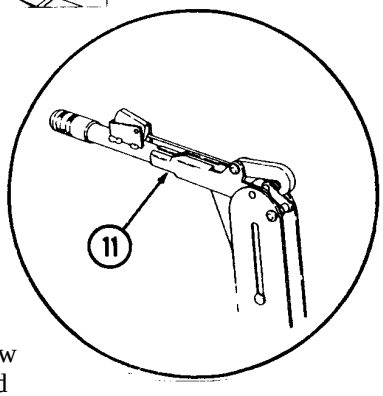

NEW CONFIGURATION

KEY	ITEM AND FUNCTION
1	*Directional signal lever* activates turn signal lights.
2	*Warning hazard control* activates the warning flashers.
3	*Horn button* activates vehicle horn.
4	*Baffle operating rods* slide open to allow heated air into crew compartment.
5	*Fresh air intake lever* is pulled back to allow fresh air into crew compartment, or pushed forward to close.
6	*Simplified Test Equipment/Internal Combustion Engine-Reprogrammable (STE/ICE-R) diagnostic connector* is attaching point for the vehicle test meter (VTM) to facilitate vehicle electrical and engine systems diagnoses.
7	*Transmission shift lever* is used to select vehicle driving range, "R" (reverse), "N" (neutral), "D" (drive), "Ⓓ" (overdrive) (M1123 and A2 vehicles only), "2" (second), "1" (first), and "P" (park).
8	*Transfer case shift lever* is used to select vehicle driving range, "L" (low range), "N" (neutral), "H" (high range), and "H/L" (high lock range).
9	*Transmission indicator lamp* comes on when ignition switch is turned on, and goes off when ignition switch is turned off. It is used to flash the diagnostic trouble codes when the transmission control module (TCM) is placed in the diagnostic mode.
10	*Transfer case indicator lamp* illuminates when transfer case has completed the low-range shift and high lock range shift.
11	*Parking brake lever* is used to apply parking brake. Safety release button must be depressed to release parking brake in new configuration.
12	*Fording control switch* (deep water fording kit only) allows operator to select "VENT" during normal operating conditions or "DEEP FORD" for deep water fording.
13	*Steering wheel lock cable* permits steering wheel to be locked to prevent unauthorized use of vehicle.

KEY	ITEM AND FUNCTION
14	*Windshield washer/wiper control knob* operates a two-speed electric wiper motor and when depressed operates windshield washer.

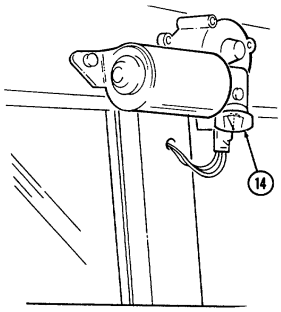

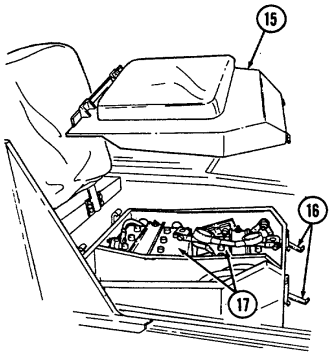

15	*Companion seat* is removed to provide access to batteries.
16	*Battery box latches* release to permit removal of companion seat for access to batteries.
17	*Batteries* provide 24-volt power to vehicle electrical system.
18	*Slave receptacle* is located at outside front of battery box. It is the connecting point for the slave cable for slave-starting the vehicle.

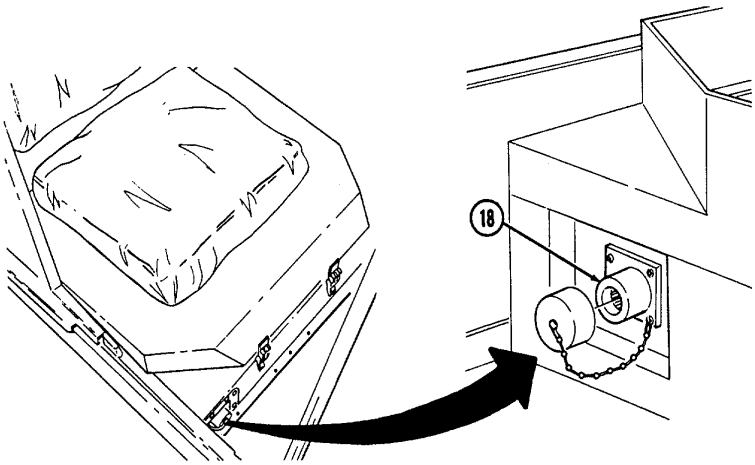

KEY	ITEM AND FUNCTION
1	*Engine access cover* is removed to provide access to rear of engine.
2	*Radio rack* serves as mounting point for AN/GRC-160 or AN/VRC-12 radios.
3	*Microphone bracket* serves as mounting point for microphone.

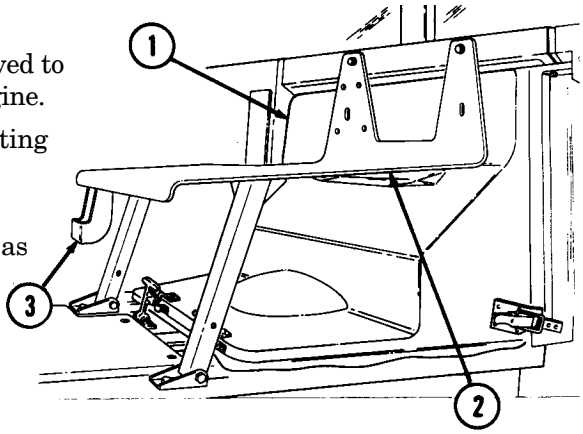

4 *Fire extinguisher bracket* is located under front of driver's seat and is the stowage location for fire extinguisher. For new configuration vehicles, the bracket is located on the side of the driver's seat.

5 *Wing head screws* (two each) secure front access plate for stowage area under driver's seat.

6 *Driver's seat adjusting slots* permit driver's seat to be locked in a forward or rearward position. For the new configuration vehicles, the adjusters are located on front of driver's seat.

7 *Catch assembly* holds M16A1 rifle safely in place for travel. Adjustable catch assembly configuration holds M16A1 rifle when positioned all the way in or M203 grenade launcher when extended out.

8 *Stock brace* holds stock end of M16A1 rifle or M203 grenade launcher in position for travel.

9 *First aid kit* is located underneath the driver's seat and is used for crew emergency first aid treatment.

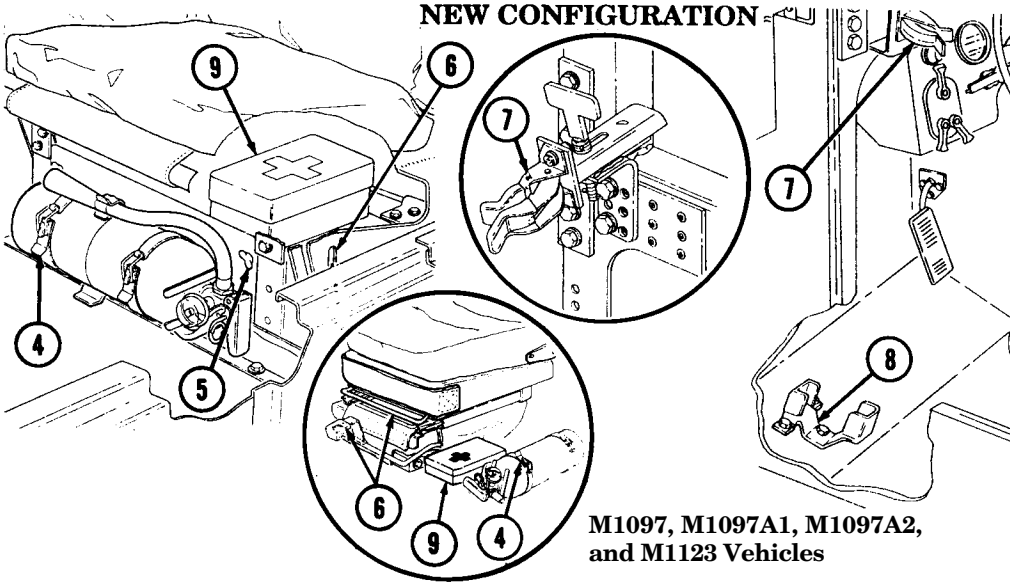

M1097, M1097A1, M1097A2, and M1123 Vehicles

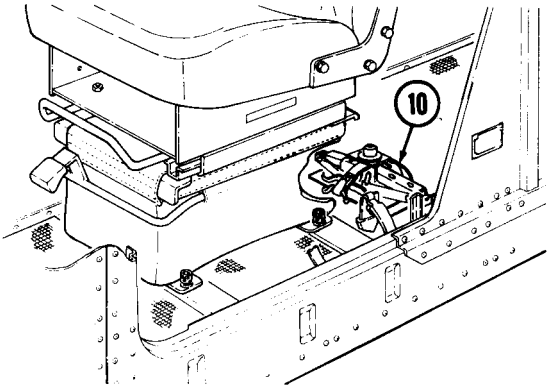

10 *Jack retaining strap* (M1097 only) is located behind the driver's seat and is used to secure the jack firmly to the vehicle floor.

b. Engine Compartment

11 *Power steering fluid reservoir cap/dipstick* (located left front of engine) is removed to fill and/or check power steering fluid level.

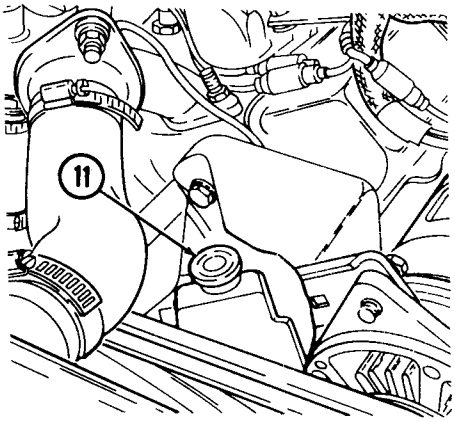

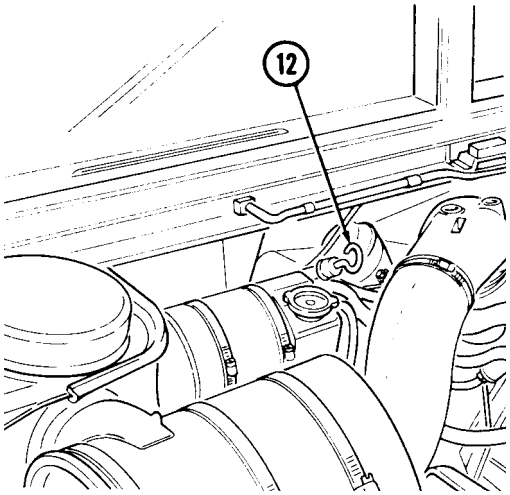

12 *Transmission oil dipstick* (on vehicles without deep water fording kit) is located right rear of engine and removed to check transmission fluid level.

13 *Transmission oil dipstick* (on vehicles with deep water fording kit) is located right rear of engine and removed to check transmission fluid level.

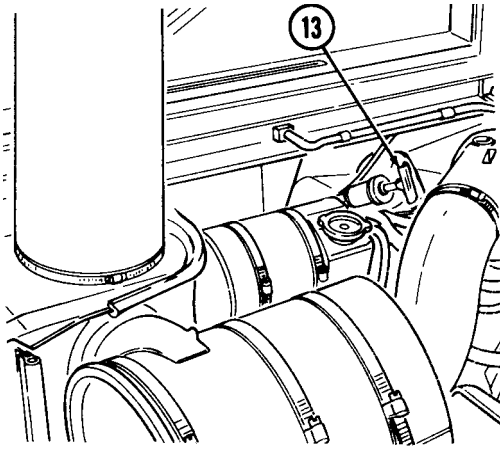

KEY	ITEM AND FUNCTION
1	*Transmission oil dipstick tube* (located right rear of engine) is fill point for transmission fluid.

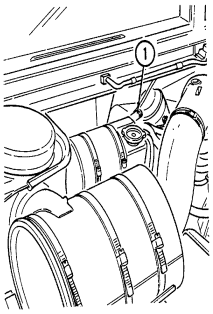

2 *Engine oil dipstick* (on vehicles without deep water fording kit) is located behind alternator on left side of engine and removed to check engine oil level.

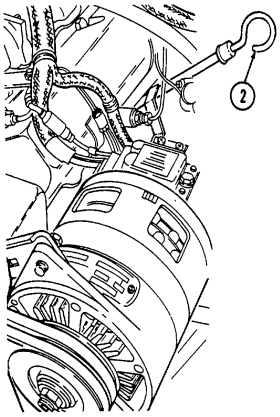

3 *Engine oil dipstick* (on vehicles with deep water fording kit) is located behind alternator on left side of engine and is removed to check engine oil level.

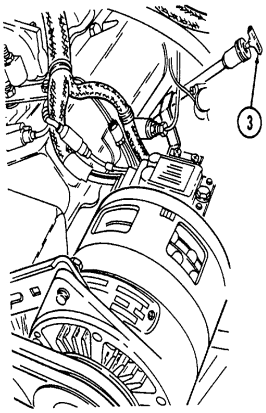

4 *Engine oil filler cap* (located front center of engine) is removed from oil filler neck to add oil to engine.

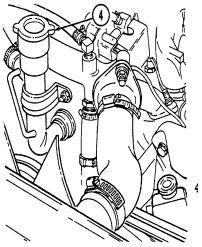

KEY	ITEM AND FUNCTION
5	*Radiator drainvalve* (located beneath right front of engine on lower radiator crossover pipe) is turned counterclockwise to drain coolant from the radiator.

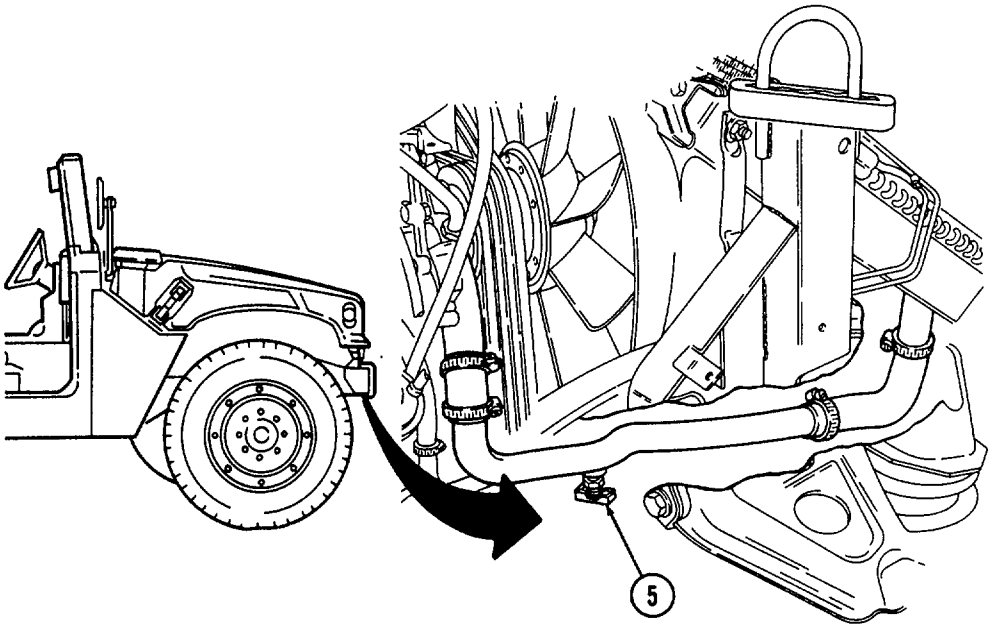

6	*Coolant surge tank cap* (located right rear of engine) is removed from surge tank to add coolant to cooling system.

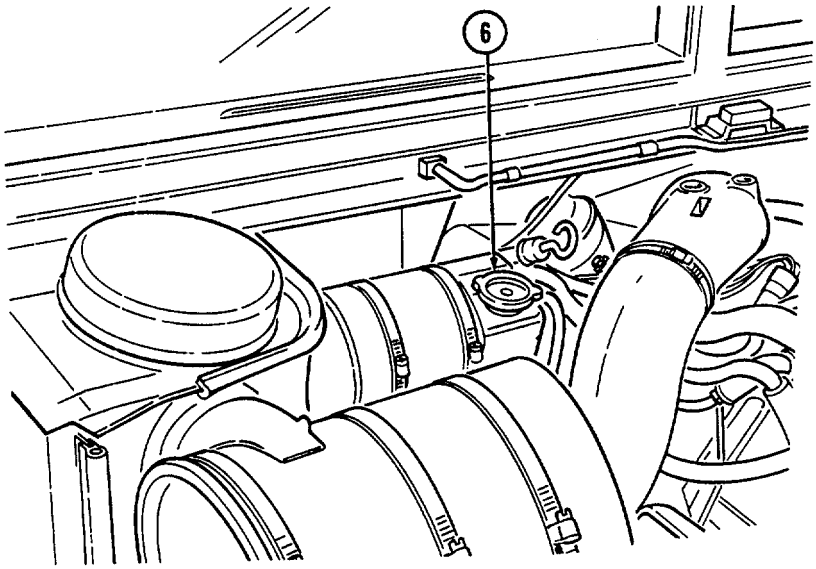

KEY	ITEM AND FUNCTION
1	*Fuel filter* (located left rear of engine on firewall) filters water from fuel system.
2	*Windshield washer reservoir cap* (located left rear of engine) unsnaps to add windshield washer fluid to reservoir.
3	*Fuel filter drainvalve* (located left rear of engine compartment on cowl, beneath and in front of windshield washer reservoir) is draining point for water collected in fuel filter.
4	*Master cylinder cover* (located left of engine) is removed to fill and/or check brake fluid level.

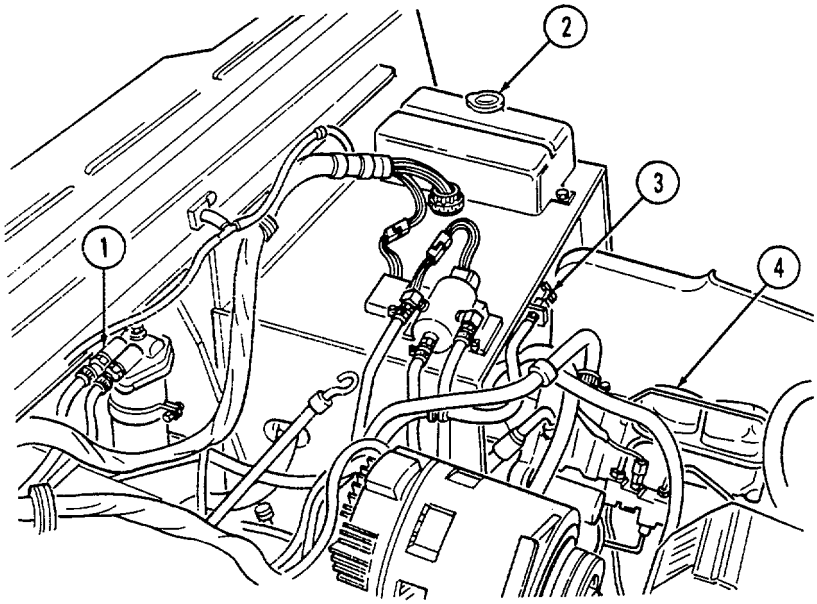

5 *Air cleaner assembly* (located right rear of engine) houses air cleaner element which filters dirt and dust from air before it enters combustion chamber.

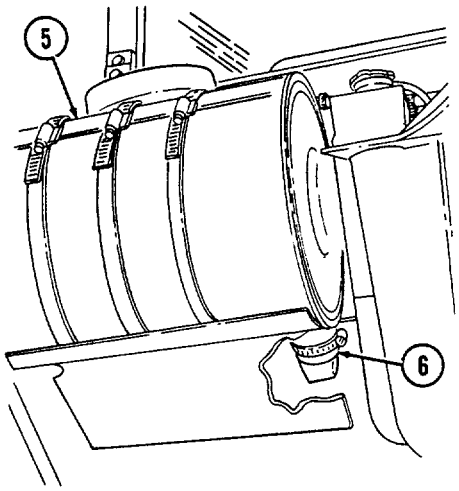

6 *Air cleaner dump valve* when squeezed, releases dirt, mud, or water from air cleaner body assembly.

c. Vehicle Exterior.

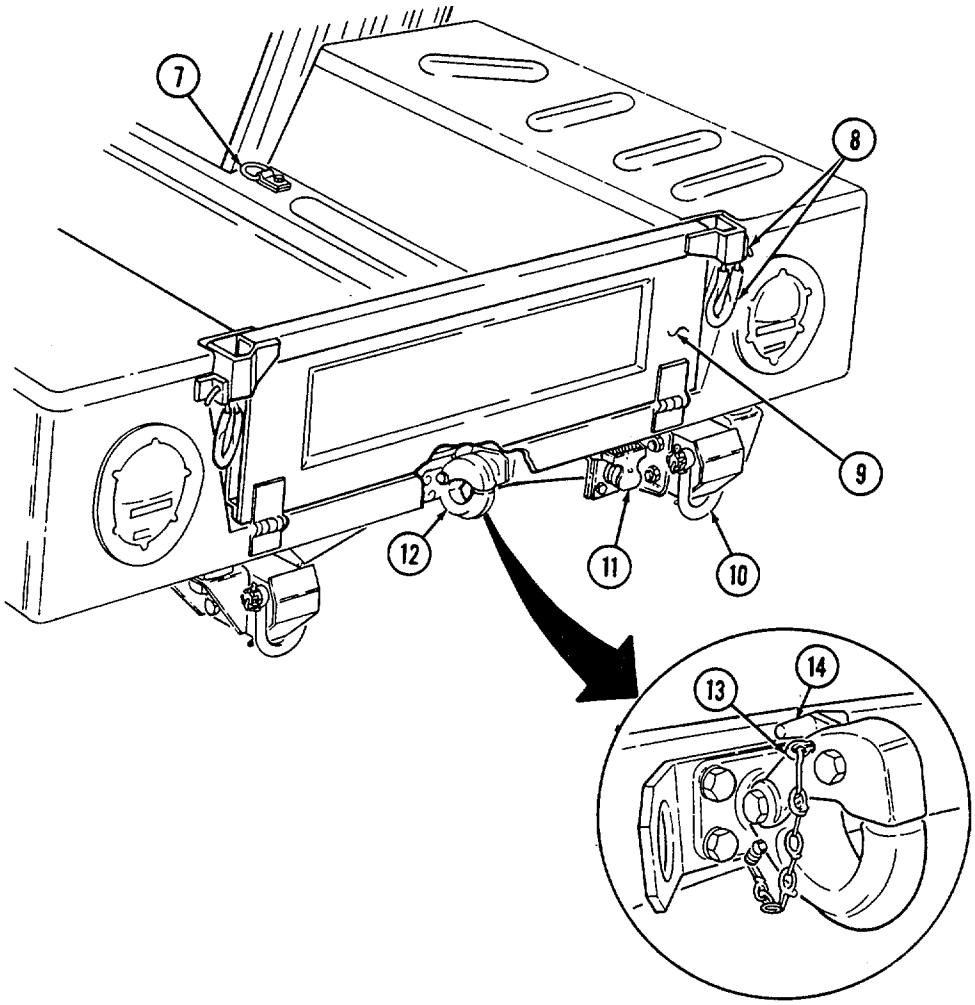

KEY	ITEM AND FUNCTION
7	*Cargo tiedowns* (eight each) provide tiedown points for use in cargo operations (M998, M998A1, M1038, and M1038A1 only).
8	*Tailgate chains and hooks* secure tailgate to rear of vehicle body (all except M996, M996A1, M997, M997A1, and M997A2).
9	*Tailgate* opens and closes to allow access to vehicle cargo area (all except M996, M996A1, M997, M997A1, and M997A2).
10	*Lifting shackles* (located at front and rear of vehicle) are used to lift or tie down vehicle.
11	*Trailer receptacle* provides electrical power for towed equipment.
12	*Towing pintle* (rear bumper) provides connection point for towing.
13	*Pintle pin* locks pintle latch to towing pintle.
14	*Pintle latch* pulls up to open towing pintle and pushes down to lock towing pintle.

KEY **ITEM AND FUNCTION**

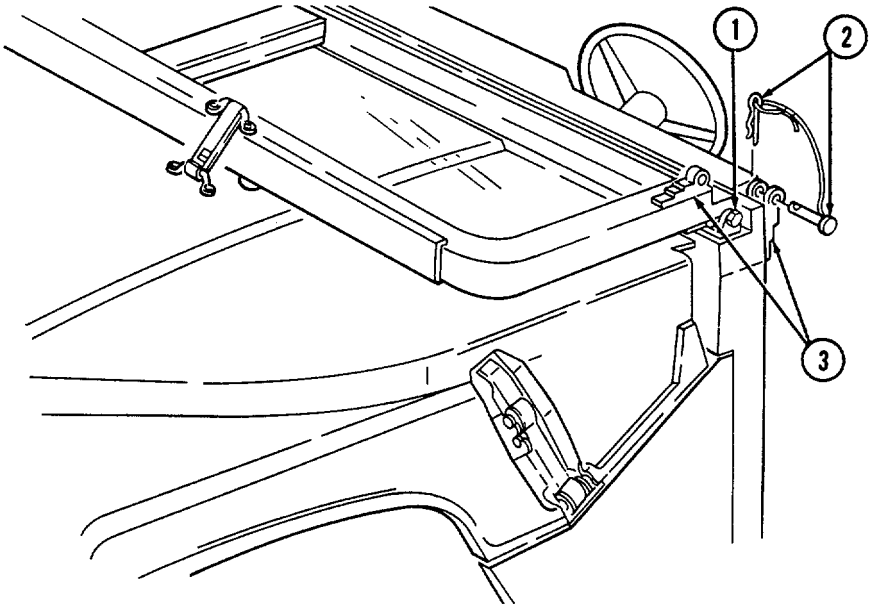

1 *Windshield folddown hinges* (soft top models only) are used as a hinge point when lowering windshield. Hinge pins are removed when detaching windshield assembly.

2 *Hitch pin and hinge pin* are removed to allow windshield to be lowered or detached.

3 *Windshield hinges* (soft top models only) secure windshield in the raised (up) position with hinge pins installed. Hinge pins are removed when lowering or detaching windshield.

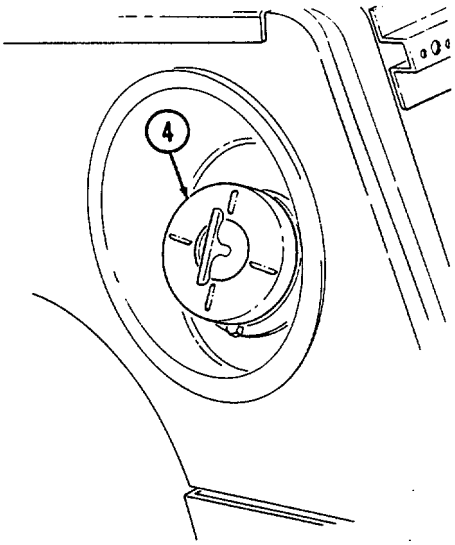

4 *Fuel tank filler cap* (located at right rear side of vehicle) is removed to permit fuel servicing.

KEY	ITEM AND FUNCTION
5	*Hood latches* (one on each side of hood) unlatch to release hood.

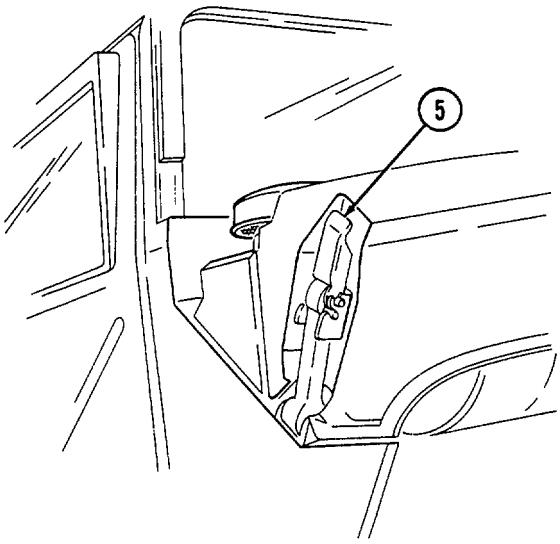

6	*Hood support rod* supports hood in the raised position.

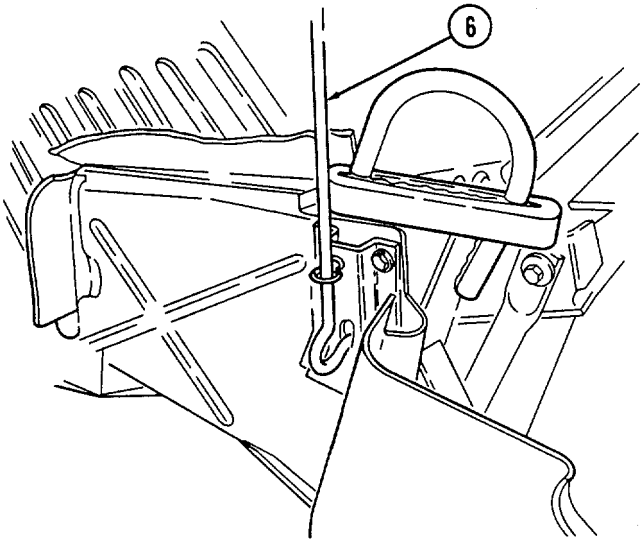

d. TOW Carrier (M966, M996A1, M1036, M1045, M1045A1, M1045A2, M1046, and M1046A1) Equipment.

WARNING

Never open one end of the cargo shell door without first ensuring that the opposite end is securely closed. Not doing so may cause both ends to open at same time causing damage to equipment, mission abort, or injury to personnel.

NOTE

This manual identifies HMMWV equipment which permits the mounting and operation of the TOW launcher system. Specific instructions for employing the TOW and TOW 2 launcher on the HMMWV are covered in TM 9-1425-450-12 and TM 9-1425-472-12.

KEY	ITEM AND FUNCTION
1	*Cargo shell door strap* serves as a grab strap to lower cargo shell door.
2	*Cargo shell door assist cylinders* provide a lift boost for raising and holding cargo shell door open.
3	*Cargo shell door* is a double-actuating door which pivots at either end. When door forward latch is released from inside vehicle, door opens rearward and functions as a TOW loader's door to facilitate mounting of TOW launcher and missile loading. When door rear latch is released, door opens forward and permits access to cargo area from rear of vehicle for stowing TOW launcher and equipment or ground mounting TOW launcher.
4	*Cargo shell door rear latch* is pulled upward to open cargo shell door from rear of vehicle.
5	*Launch tube brackets* (located on underside of cargo shell door) serve as stowage points for missile launch tube.
6	*Cargo shell door retaining cables* limit cargo shell door travel when opened from either end.
7	*Cargo shell door forward latch locking device* prevents accidental opening of cargo shell door from inside vehicle.
8	*Cargo shell door forward latch* is pulled downward to open door from inside vehicle.
9	*Cargo shell door front grab handle* serves as a grabbing point for lowering door when inside vehicle.

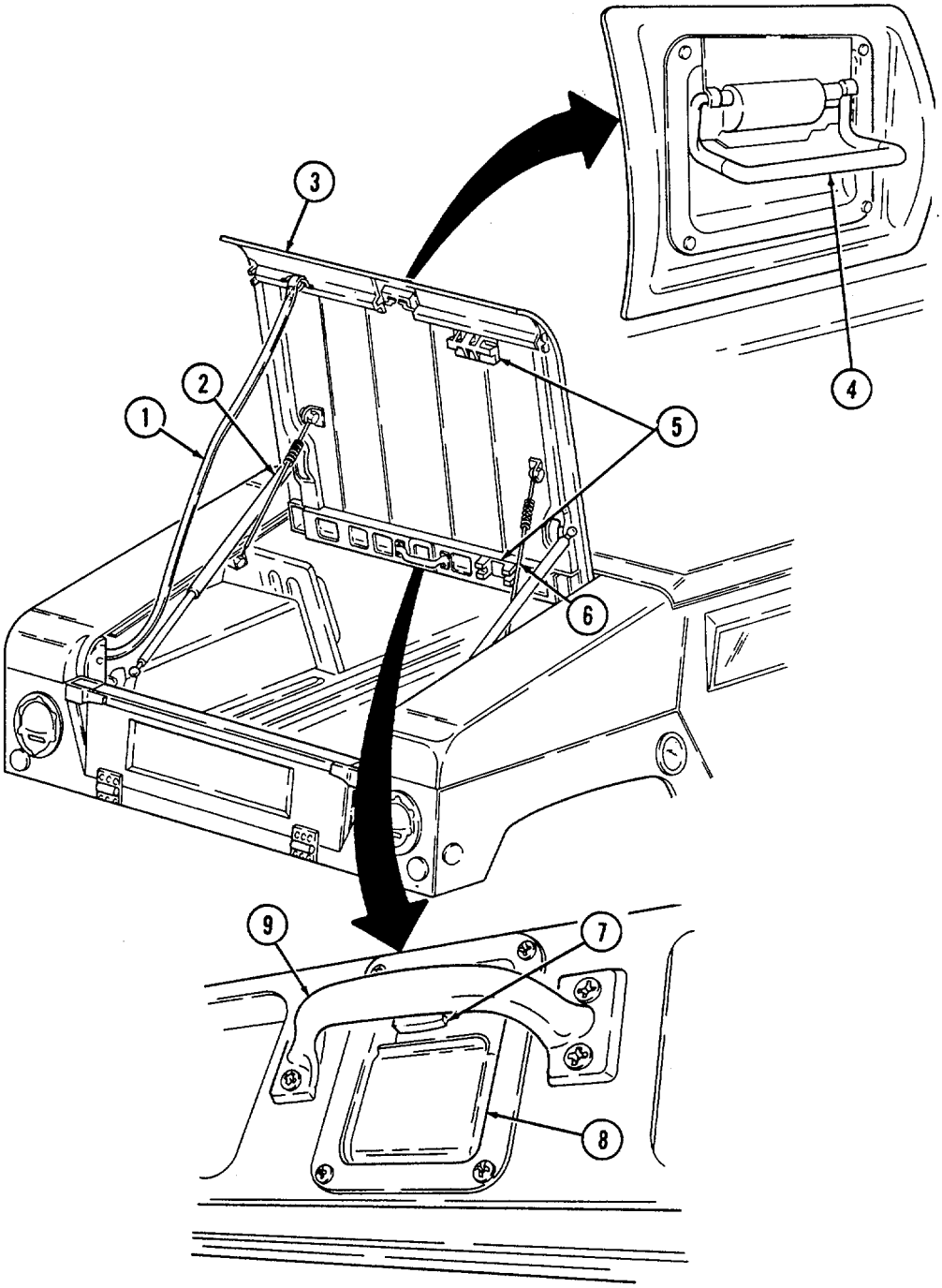
1
2
3
4
5
6
7
8
9

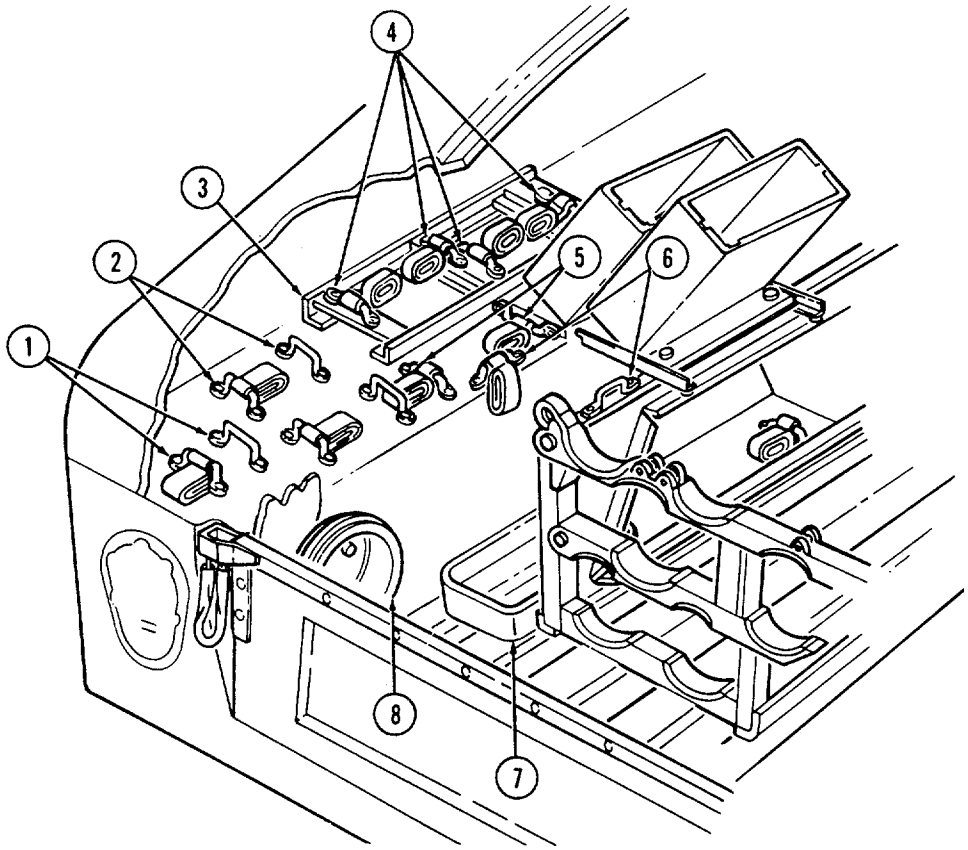

KEY	ITEM AND FUNCTION
1	*Telephone set footman loops* (two each) *and strap* secure telephone set beneath rear of left cargo shell.
2	*Cable reel footman loops* (two each) *and strap* secure cable reel forward of telephone set stowage location.
3	*M16 ammo box rack* serves as stowage base for two M16 ammo boxes and is located forward of the cable reel stowage location.
4	*M16 ammo box footman loops and straps* (four each) secure two M16 ammo boxes to ammo rack.
5	*Combat ration footman loops* (four each) *and straps* (three each) secure one case of combat rations right rear of M16 ammo rack.
6	*Fuel can footman loops* (two each) *and strap* secure fuel can to fuel can stowage bracket.
7	*Fuel can stowage bracket* located between the left wheelhouse and missile rack permits vertical stowage of fuel can.
8	*Tripod head mounting bracket* secured to left rear wheelhouse permits mounting of traversing unit end of tripod in the stowed position.

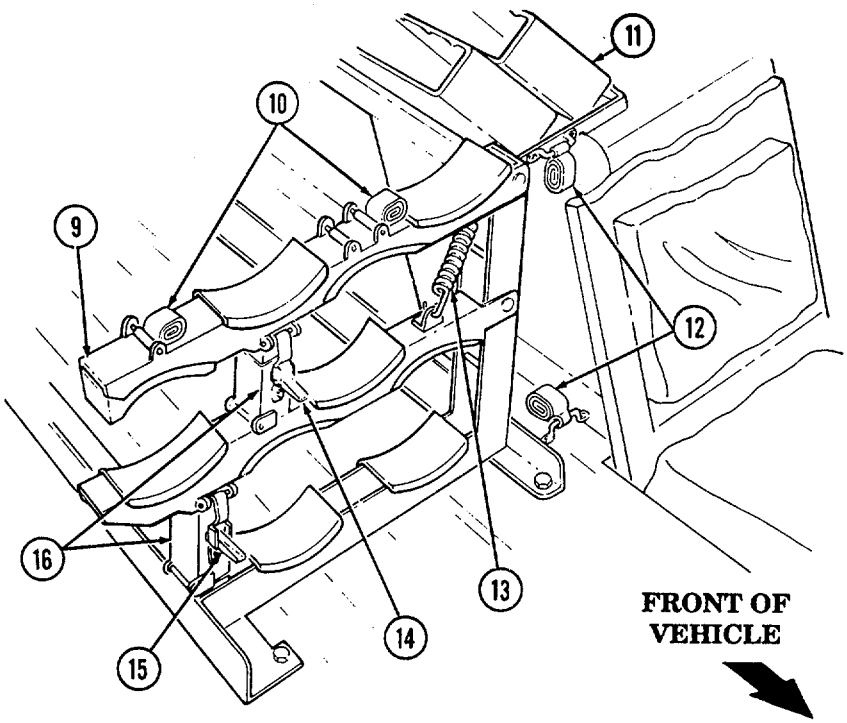

KEY	ITEM AND FUNCTION
9	*Missile stowage rack* provides stowage for six TOW missile rounds. It consists of a base, a first tier, and a second tier. Tiers pivot upward to facilitate missile stowage and quick access to missiles during reload operations. Missiles are mounted in each rack with warheads facing front of vehicle. Missiles stowed between rack base and second tier are held in without straps. Missiles mounted on top of the second tier are secured with straps located fore and aft of rack.
10	*Second tier mounting straps* (four each) located fore and aft of missile rack secure two missile rounds to second tier of rack.
11	*Missile guidance set (MGS) battery stowage boxes* provide stowage for two MGS batteries.
12	*Water can footman loops and straps* (two each) secure stowed water can between missile rack and left wheelhouse.
13	*Missile rack tier retaining springs* (two each) retain raised first or second tiers of missile rack to permit stowage of missiles or access to missiles for reloading operations.
14	*Missile rack second tier locking latches* (two each) located fore and aft of missile rack secure second tier of missile rack to first tier of missile rack.
15	*Missile rack first tier locking latches* (two each) located right side of missile rack secure first tier of missile rack to rack base.
16	*Missile rack support braces* (two each) support first and second missile rack tiers and pivot to outside to allow easy access to missiles for stowage or reloading.

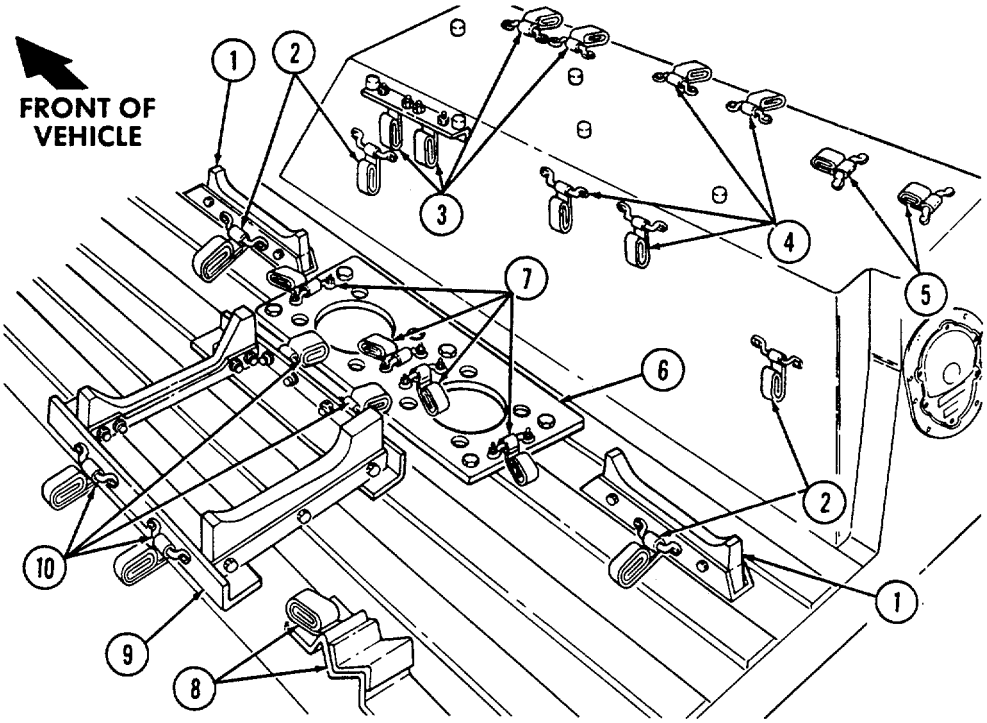

KEY	ITEM AND FUNCTION
1	*Night sight battery case stowage brackets* (two each) provide mounting locations for night sight battery cases.
2	*Night sight battery case footman loops and straps* (four each) secure two night sight battery cases to night sight battery case stowage brackets.
3	*Night sight battery case mounting bracket footman loops* (two each) and straps (four each) provide stowage of night sight case to top front of right wheelhouse.
4	*Boresight collimator case footman loops and straps* (four each) secure boresight collimator case to top rear of right wheelhouse.
5	*Combat ration footman loops and straps* (two each) secure one case of combat rations.
6	*Night sight coolant cartridge case stowage bracket* provides mounting location for night sight coolant cartridge cases.
7	*Night sight coolant cartridge case footman loops and straps* (four each) secure two night sight coolant cartridge cases to night sight coolant cartridge case stowage bracket.
8	*Tripod legs mounting bracket and strap* provide stowage for leg end of tripod.
9	*Day sight and carrying bag stowage bracket* provide stowage location for day sight and carrying bag in front of tripod.
10	*Day sight and carrying bag footman loops and straps* (four each) secure day sight to day sight stowage bracket.

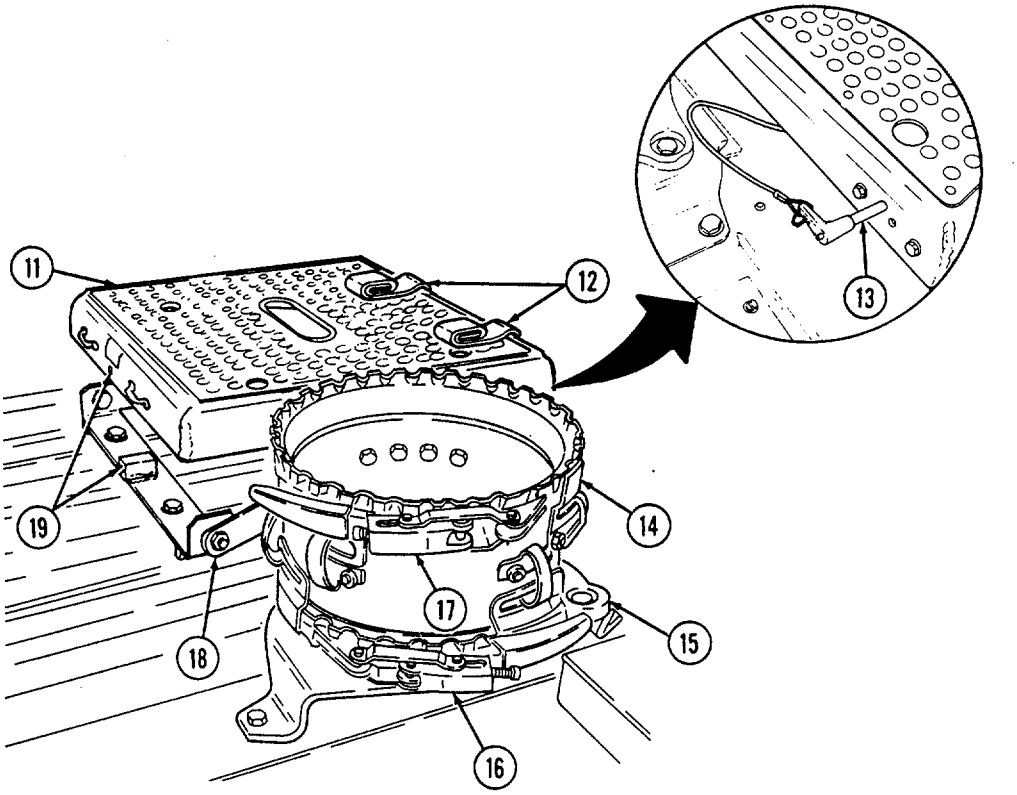

KEY	ITEM AND FUNCTION
11	*Gunner's platform* provides an adjustable non-slip platform for TOW gunner. Also serves as mounting base for the MGS in the stowed position.
12	*Missile guidance set footman loops and straps* secure MGS to the gunner's platform during extended travel mode.
13	*Gunner's platform locking pins* (two each) secure gunner's platform to selected height risers.
14	*Traversing unit (TU) mount adapter* adapts TU to the TU stowage pedestal or weapon station pedestal mount.
15	*Traversing unit stowage pedestal* provides mounting base for TU mount adapter.
16	*Lower traversing unit mount adapter clamp* secures TU mount adapter to the stowage pedestal or weapon station pedestal mount.
17	*Upper traversing unit mount adapter clamp* secures TU to TU mount adapter.
18	*Gunner's platform risers* provide support and height adjustment for gunner's platform.
19	*Gunner's platform locking lugs and holes* (two each) secure gunner's platform to fully lowered position when locking pin is installed.

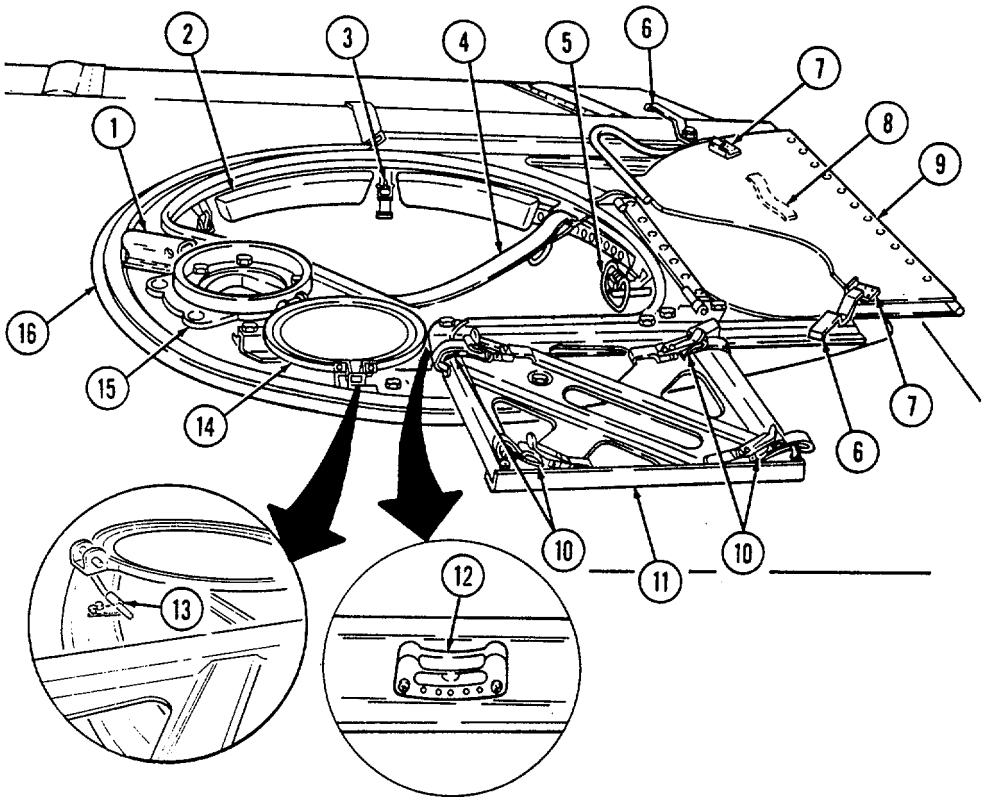

KEY	ITEM AND FUNCTION
1	*Turret positioning handle* provides positive right-hand grip to rotate weapon station. Hole in handle serves as securing point for weapon station pedestal mount cover.
2	*Gunner's backrest* provides back support for a gunner positioned in weapon station.
3	*Hatch cover securing latches* (three each) secure cover to weapon station.
4	*Gunner's sling* serves as seat rest or restraint for a gunner positioned in weapon station.
5	*Weapon station brake handle* locks the weapon station at the gunner's desired azimuth. Handle is placed in the down position for locking and pulled up when traversing the weapon station.
6	*Hatch cover retaining latches* (two each) secure to latch catches for retaining station cover in the open position.
7	*Hatch cover retaining catches* (two each) are connection points for retaining latches.
8	*Hatch cover handle* is grab handle to assist gunner in opening and closing station cover.
9	*Weapon station hatch cover* provides sealed protective covering for roof opening when TOW is not mounted to weapon station.

KEY	ITEM AND FUNCTION
10	*Missile guidance set retaining latches* (four each) secure MGS to MGS weapon station mounting tray.
11	*Missile guidance set weapon station mounting tray* is mounting point for the MGS when the TOW launcher is assembled on the weapon station.
12	*TOW carrier level gauge (inclinometer)* measures levelness of the vehicle to alert TOW crew when vehicle is beyond recommended side slope operation.
13	*Weapon station pedestal mount cover retainer* secures pedestal mount cover in the open position.
14	*Weapon station pedestal mount cover* protects pedestal mount opening when TOW launcher is not mounted.
15	*Weapon station pedestal mount* is mounting point for TU adapter bracket and TOW launcher.
16	*Weapon station* serves as rotating mounting platform for TOW components during the launcher mode of operation. It can be continuously rotated 360° without vehicle power conditioner (VPC) cables connected.
17	*Vehicle power conditioner (VPC) mounting plate* provides a mounting point for the VPC. This bracket is mounted to the radio rack.
18	*Field glasses bracket* serves as mounting point for field glasses.

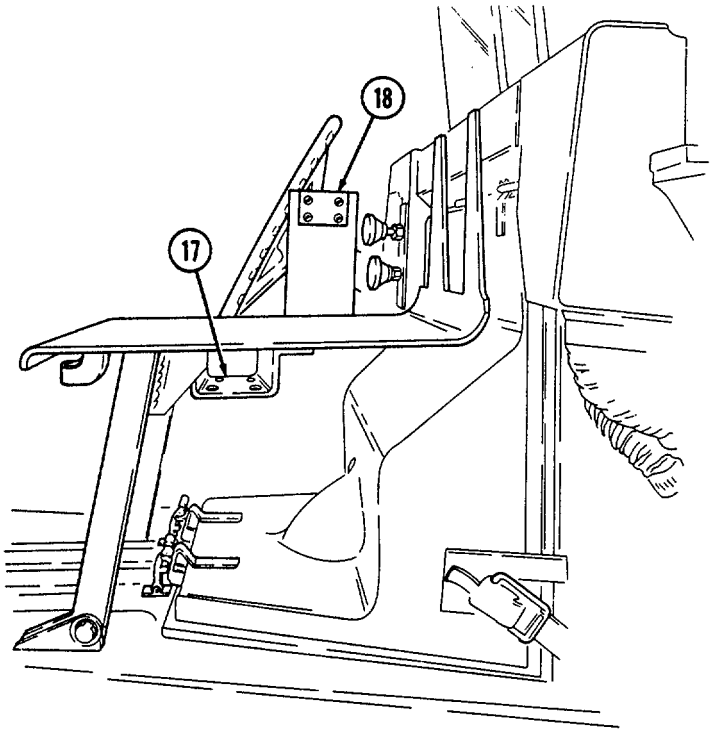

KEY	ITEM AND FUNCTION
1	*Camouflage screen stowage straps* (four each) secure camouflage screen and support to tailgate.
2	*NBC overgarments straps* (two each) secure two sets of NBC overgarments and four sets of gloves to floor (under left rear passenger seat).

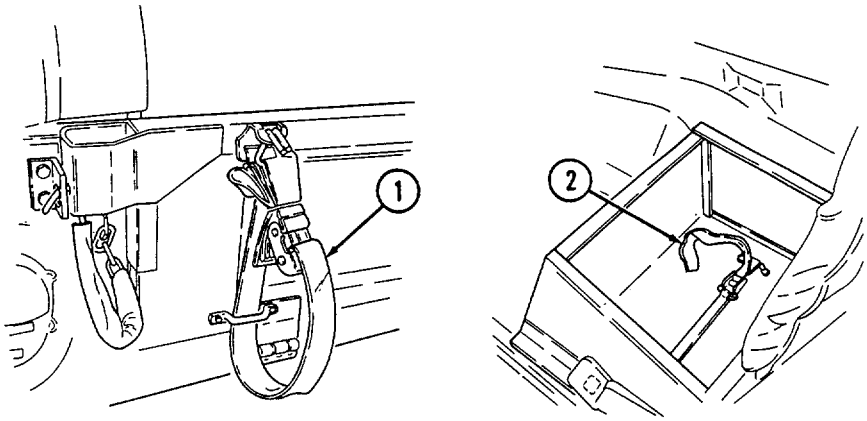

3	*NBC overgarments straps* (eight each) secure two sets of overgarments (one set on each side) to cargo shell.
4	*Night sight vision goggles stowage straps* secure two sets of night sight vision goggles to floor (under right rear passenger seat).
5	*Radiac meter stowage straps* secure radiac meter to floor (under right rear passenger seat).

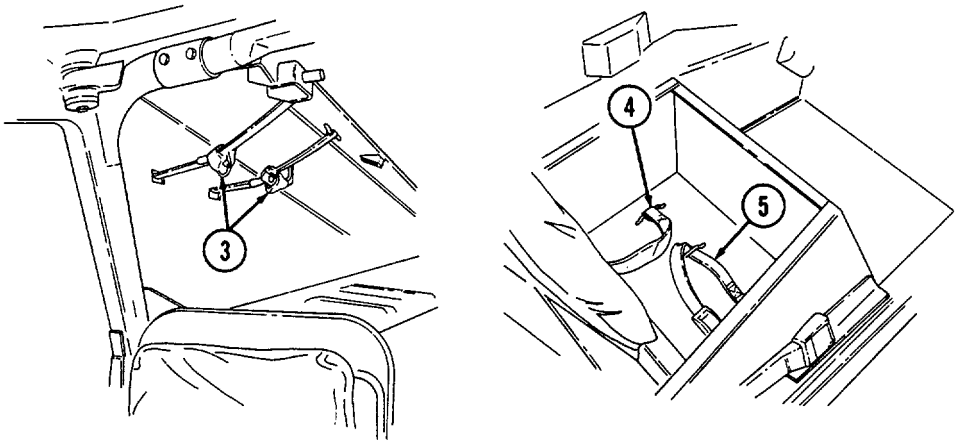

KEY	ITEM AND FUNCTION
6	*Power connector* is located lower right side of "B" pillar and supplies power for vehicle power conditioner (VPC).
7	*Power conditioner cable* supplies vehicle power to TOW launcher equipment.

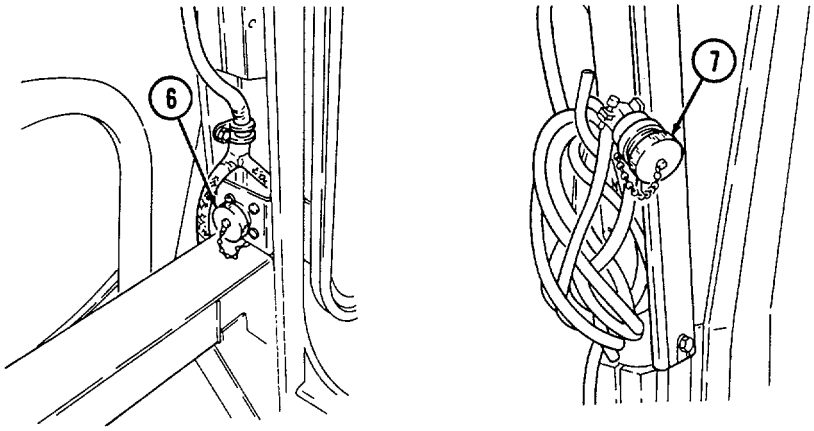

8	*Vehicle power conditioner cable cleat* (for vehicles with serial numbers 99,999 and below) secures the VPC cable to the inner right side of the "B" pillar when the cable is not connected to the power conditioner.
9	*Vehicle power conditioner cable cleat* (for vehicles with serial numbers 100,000 and above) secures the VPC cable behind the passenger seat when the cable is not connected to the power conditioner.

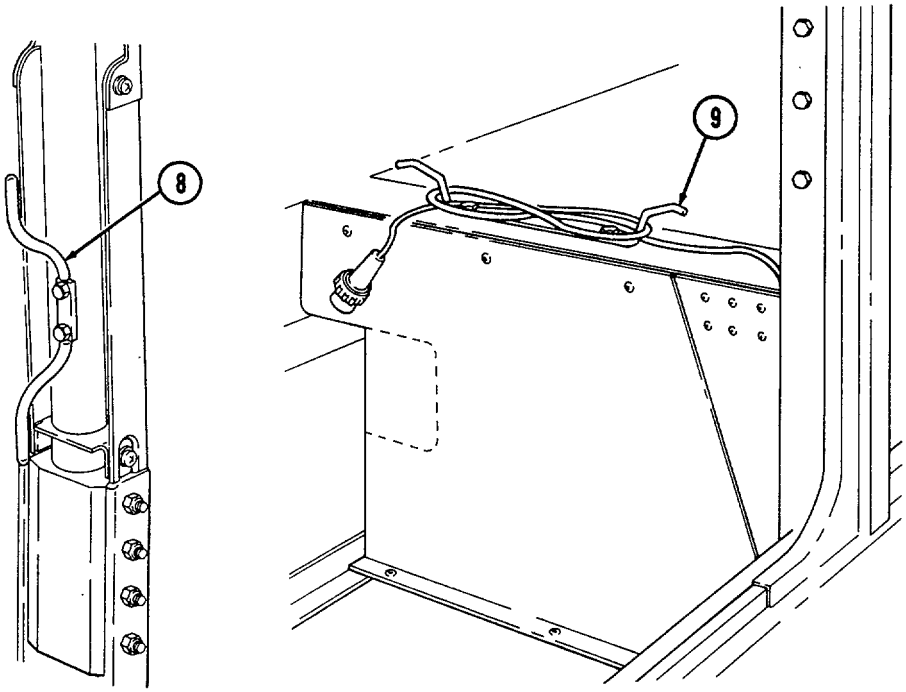

e. Armament Carrier (M1025, M1025A1, M1025A2, M1026, M1026A1, M1043, M1043A1, M1043A2, M1044, and M1044A1) Equipment.

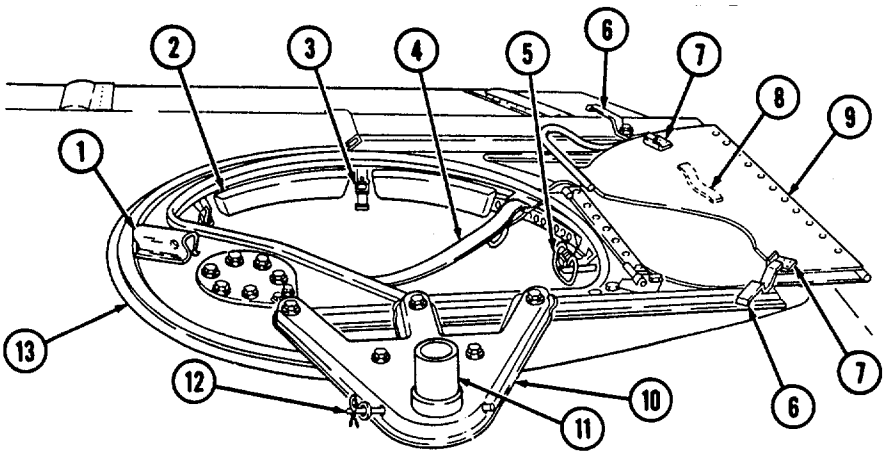

KEY	ITEM AND FUNCTION
1	*Turret positioning handle* provides positive right-hand grip to rotate weapon station.
2	*Gunner's backrest* provides back support for a gunner positioned in weapon station.
3	*Hatch cover* securing latches (three each) secure cover to weapon station.
4	*Gunner's sling* serves as seat rest or restraint for a gunner positioned in weapon station.
5	*Weapon station brake handle* locks the weapon station at the gunner's desired azimuth. Handle is placed in the down position for locking.
6	*Hatch cover retaining latches* (two each) secure to latch catches for retaining station cover in the open position.
7	*Hatch cover retaining catches* (two each) are connection points for retaining latches.
8	*Hatch cover handle* is grab handle to assist gunner in opening and closing station cover.
9	*Weapon station hatch cover* provides sealed protective covering for roof opening when weapons are not mounted to weapon station.
10	*Armament mount* is mounting bracket for weapon adapter.
11	*Universal weapons adapter* provides mounting base for the M60 7.62 mm machine gun, M2 caliber .50 machine gun, and MK19 grenade launcher.
12	*Universal weapons adapter pin assembly* secures weapon adapter to the armament mount.
13	*Weapon station* serves as rotating mounting platform for weapon components. Can be continuously rotated 360 degrees.

NOTE

Operation and identification of cargo shell door components and gunner's platform can be found in para. 2-2d.

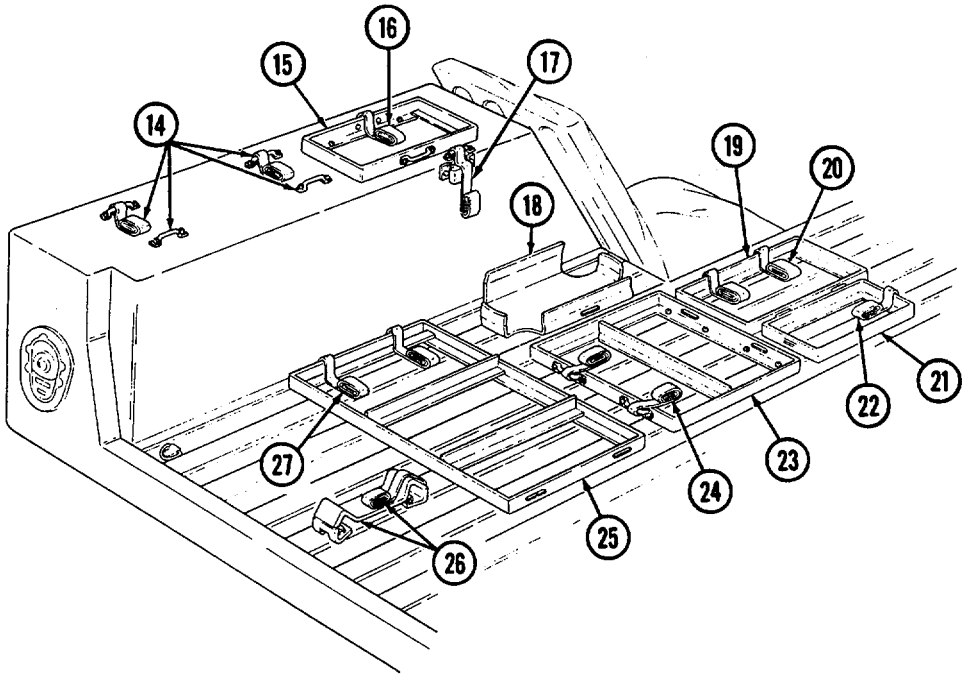

KEY	ITEM AND FUNCTION
14	*Spare barrel and cleaning kit footman loops and straps* (two each) secure spare barrel and cleaning kit for M2 caliber .50 machine gun.
15	*Ammo box rack* provides stowage base for caliber .50 ammo box.
16	*Ammo box footman loop and strap* secure caliber .50 ammo box to ammo box rack.
17	*Water can footman loop and strap* secure 5 gal. water can to water can bracket;
18	*Water can bracket* provides stowage base for 5 gal. water can.
19	*Ammo box rack* provides stowage base for 40 mm ammo box.
20	*Ammo box footman loops and straps* (two each) secure 40 mm ammo box to ammo box rack.
21	*Ammo box rack* provides stowage base for caliber .50 ammo box.
22	*Ammo box footman loop and strap* secure caliber .50 ammo box to ammo box rack.
23	*Ammo box rack* provides stowage base for two 40 mm ammo boxes.
24	*Ammo box footman loops and straps* (two each) secure two 40 mm ammo boxes to ammo box rack.
25	*Ammo box rack* provides stowage base for three 40 mm ammo boxes.
26	*Tripod mounting bracket and straps* (two each) provide stowage for M3 tripod.
27	*Ammo box footman loops and straps* (two each) secure three 40 mm ammo boxes to ammo box rack.

KEY	ITEM AND FUNCTION
1	*Gun mount adapter plate* provides mounting base for stowage of 40 mm gun mount adapter.
2	*Gun mount footman loops and straps* (two each) secure 40 mm gun mount adapter to gun mount adapter plate.
3	*Pintle adapter bracket* provides mounting base for stowage of pintle adapter.
4	*Pintle adapter footman loop and strap* secure pintle adapter to pintle adapter bracket.
5	*Ammo box rack* serves as stowage base for two caliber .50 ammo boxes.
6	*Ammo box footman loops and straps* (two each) secure two caliber .50 ammo boxes to ammo box rack.
7	*Night sight case stowage brackets* (two each) provide mounting for night sight case.
8	*Night sight case footman loops and straps* (two each) secure night sight case to night sight stowage brackets.
9	*Grenade launcher stowage brackets* (two each) provide mounting base for stowage of MK19 grenade launcher.
10	*Grenade launcher straps and footman loops* (two each) secure MK19 grenade launcher to grenade launcher stowage brackets.
11	*Gun stop* restricts movement of stowed MK19/40 mm grenade launcher.
12	*Machine gun mounting brackets* (two each) provide mounting base for stowage of M2 caliber .50 machine gun.
13	*Machine gun straps and footman loops* (two each) secure M2 caliber .50 machine gun to machine gun mounting brackets.

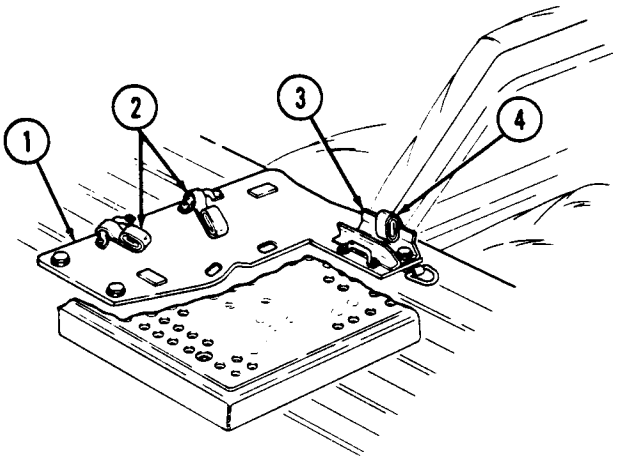

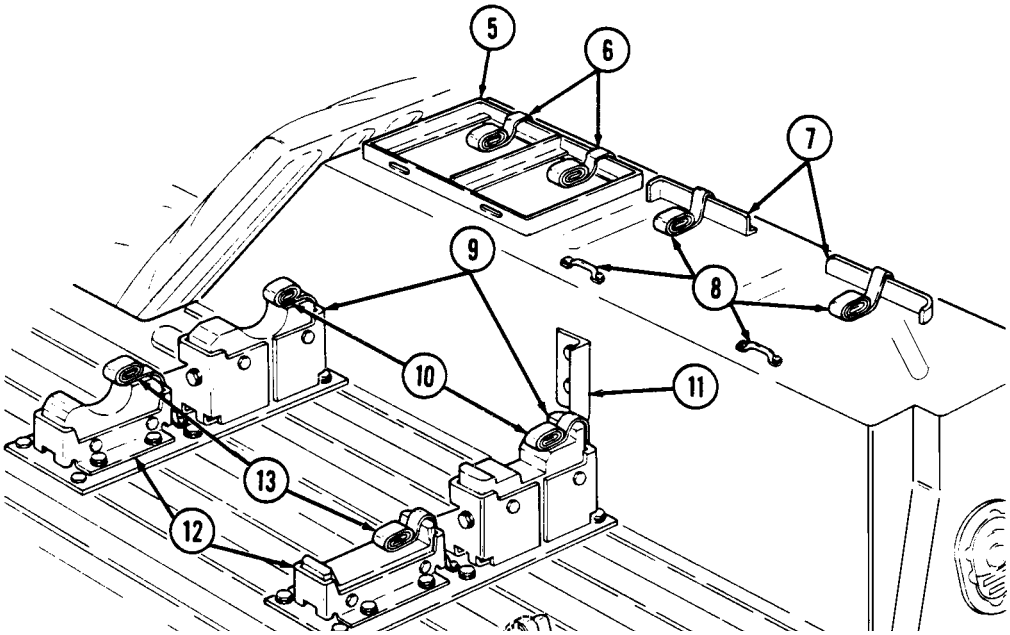

e.1. Armament Carrier (M1025, M1025A1, M1026, M1026A1) Equipment (cargo barrier and net kit)

KEY	ITEM AND FUNCTION
14	*Cargo barrier* prevents movement of cargo into the cab area during vehicle operation.
15	*Stowage compartment net* secures cargo to the cargo floor and limits movement of cargo during vehicle operation.
16	*Antiskid strips* (nine each) prevent cargo from sliding around in the cargo area.

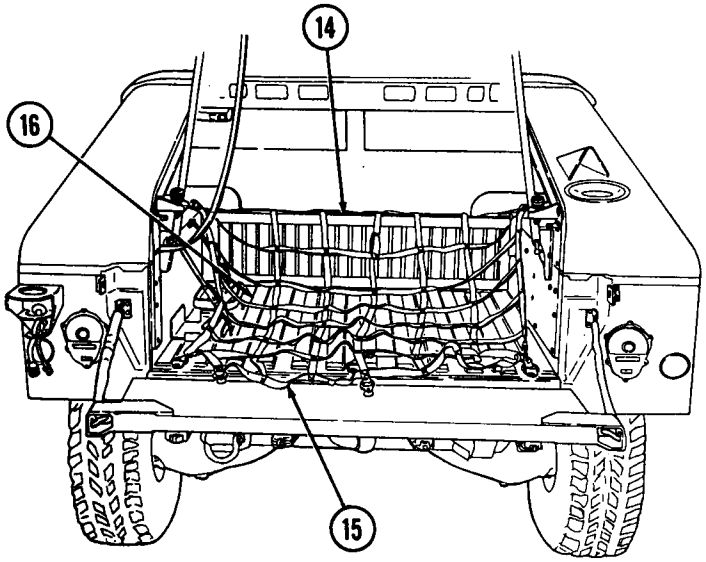

f. 81 MM Mortar Carrier (M998, M998A1, M1038, and M1038A1) Equipment.

KEY	ITEM AND FUNCTION
1	*Bipod stowage straps and tray* secure bipod assembly to the wheelhouse.
2	*Mortar ammunition container* provides stowage for mortar rounds and equipment.
3	*Four-round ready rack* provides stowage for four mortar rounds. Ready rack can be removed from mortar ammunition container and placed near firing position.
4	*Aiming post straps* (two each) secure aiming post and stowage bag to mortar ammunition container.
5	*Ready rack straps and bracket* secure four-round ready rack to mortar ammunition container.
6	*Ammunition straps* (three each) secure mortar ammunition in ammunition container.
7	*Mortar base plate stowage strap and brackets* secure mortar base plate to mortar ammunition container.

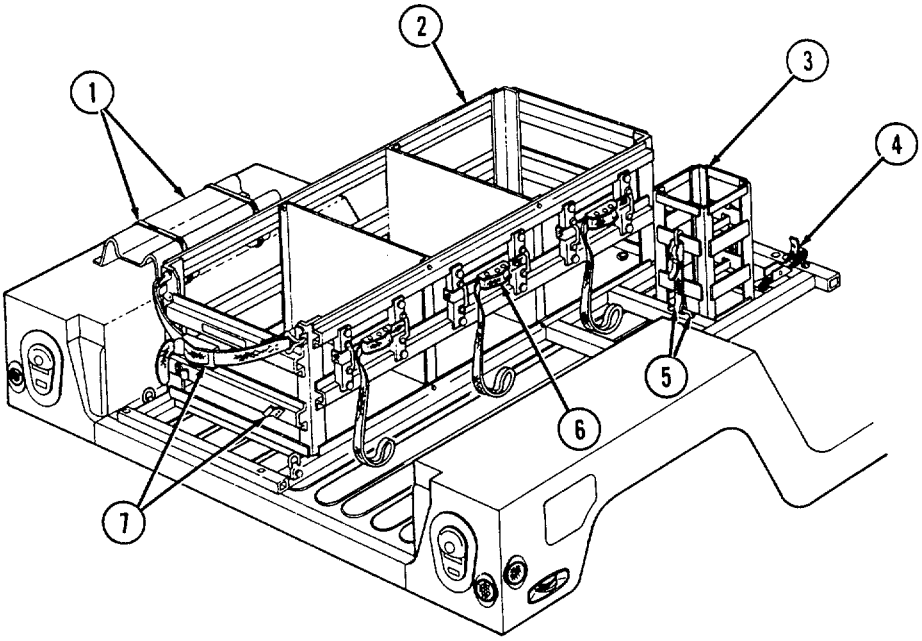

KEY	ITEM AND FUNCTION
8	*Troop seat support* provides support for forward end of troop seat when seat is lowered.
9	*Troop seat* provides seating for mortar crewman.
10	*Lockpins* (two each) secure troop seat in raised position.
11	*M14 chest strap and bracket* secure M14 lighting equipment chest to mortar equipment rack.
12	*Mortar equipment stowage rack* provides stowage for M14 chest, tool chest, and M166 chest.
13	*Tool chest strap and bracket* secure tool chest to mortar equipment rack.
14	*Troop seat bumpers* (two each) provide support for troop seat in lowered position.
15	*Stowage clips* (two each) secure cleaning staff to vehicle.
16	*Cannon stowage straps and brackets* (two each) provide stowage for 81 mm cannon.
17	*M166 chest strap and bracket* secures M166 sight unit carrying case to mortar equipment rack.

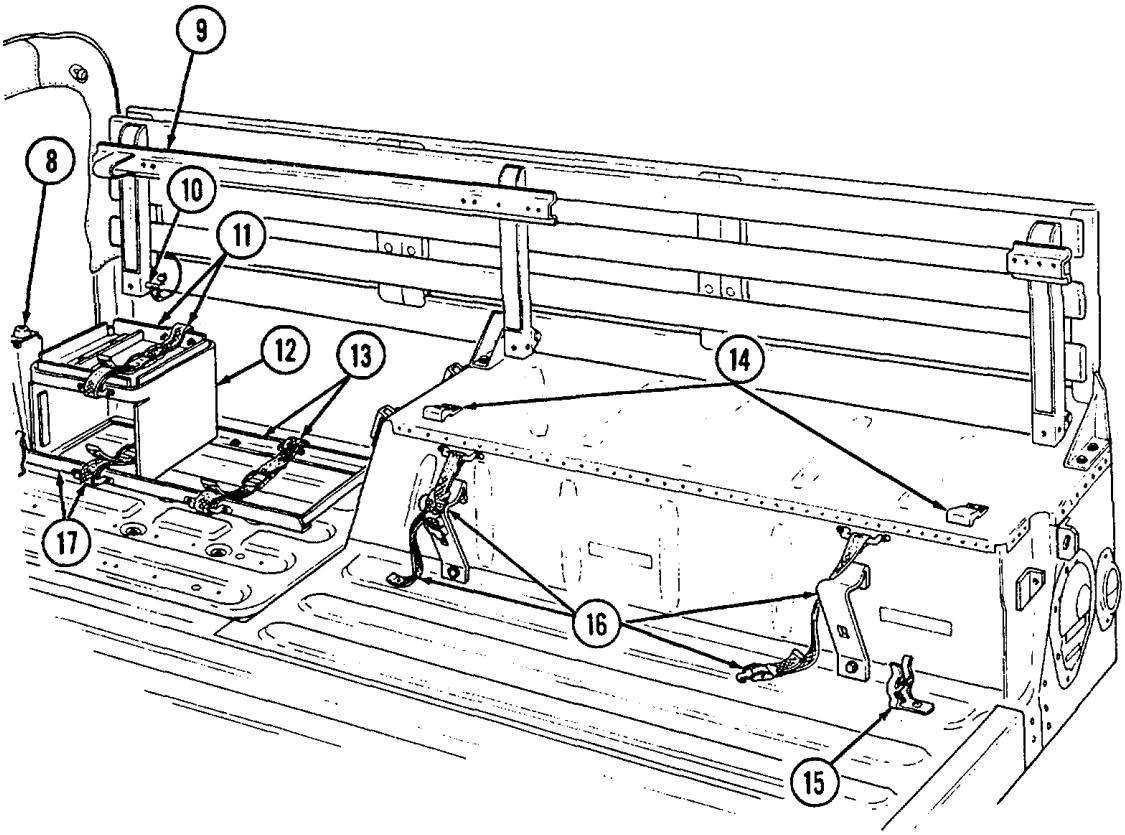

g. S250 Shelter Carrier (M1037 and M1042) Equipment.

KEY ITEM AND FUNCTION

CAUTION

The M1037 and M1042 Shelter Carriers are specifically designed to be operated with the S250 shelter installed. It can be driven safely without the shelter installed, or equivalent payload of 1500 lb (681 kg), for short distances (e.g., to and from maintenance or from the rail head when being delivered), but this should not be done often or for long distances. Driving for long distances without the shelter installed, or equivalent payload of 1500 lb (681 kg) evenly distributed in center of cargo area, will cause damage to equipment.

1 *Shelter reinforcement brackets* (four each) secure S250 Shelter Carrier to vehicle body.

2 *Rear Suspension Tiedown Kit* is used to compress rear suspension to obtain an overall height of 102 in. (259 cm) with S250 shelter.

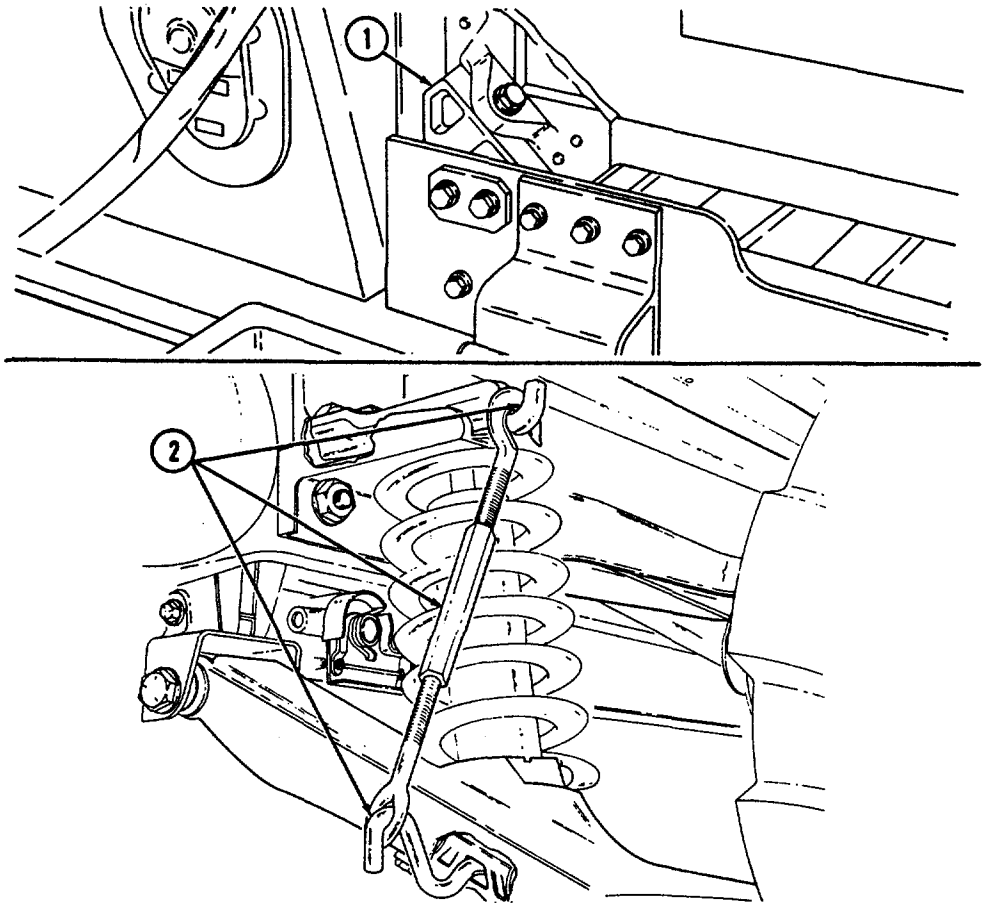

h. Soft Top Ambulance (M1035, M1035A1, and M1035A2) Equipment.

KEY	ITEM AND FUNCTION
3	*Litter straps* (eight each) secure litters to litter rack during transportation of litter patients.
4	*Upper litter tray* provides a platform for loading litter on upper litter rack.
5	*Upper litter rack* provides a platform for securing upper litter tray.
6	*Litter stop* secures litter in upper litter tray during loading, unloading, and transportation.
7	*Litter tray handle* provides positive grip to slide upper litter tray during loading or unloading.
8	*Lower litter rack* provides a platform for securing lower litter.
9	*Upper litter rack stop notch* allows upper litter tray stop to be inserted during upper litter tray stowage.
10	*Tray stop* secures upper litter tray to upper litter rack during stowage.

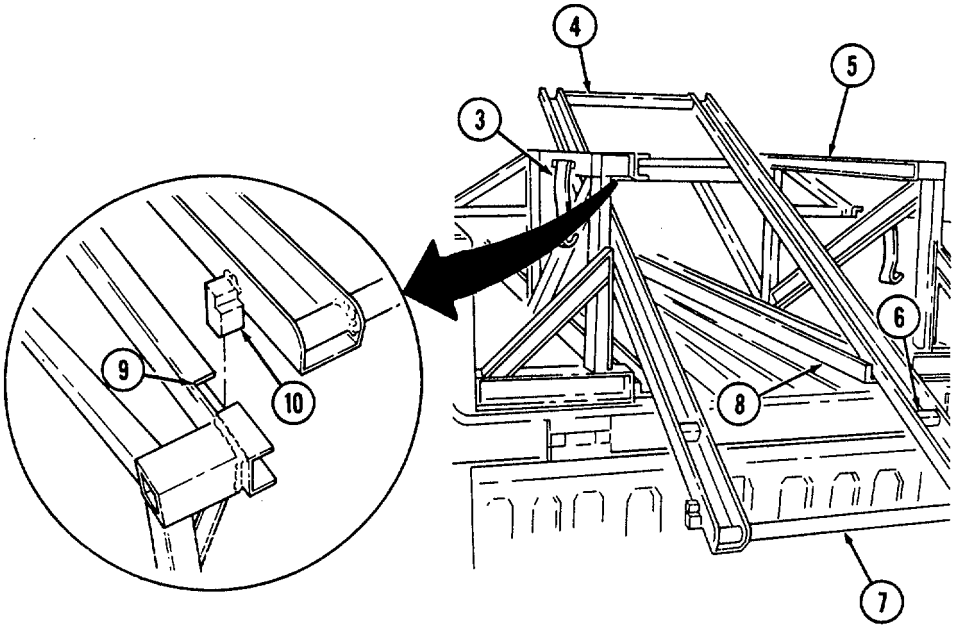

i. Four-Litter Ambulance (M997, M997A1, and M997A2) Equipment.

KEY	ITEM AND FUNCTION
1	*Four-litter ambulance* provides transport for up to eight ambulatory patients or four litter patients and two attendants. The ambulance has armor protection, self-contained heating, air-conditioning, and collective NBC protection for crew and patients.
2	*Heater exhaust pipe* vents exhaust gases from ambulance heater.
3	*Air-conditioner condenser exhaust louver* vents exhaust heat from air-conditioner condenser.
4	*Air-conditioner intake louver* provides air intake for air-conditioner.
5	*Antenna base mount* provides support for AS-1729/VRC antenna.
6	*Red cross placards* are at six locations on the ambulance; one each on the rear doors, sides, front, and top of ambulance body.
7	*Rear doors* (two each) provide access into the ambulance for patients and crew. The right rear door must be opened first, and closed last, when entering or leaving the vehicle. Ensure that doors are securely closed and latched before placing the vehicle in motion.
7.1	*Spreader Bar Tiedowns* (two each) are used during transport operations.
8	*Placard retaining clips* (twelve each) hold the red cross placards in open position, or folded when the vehicle is used for non-ambulance operations.
9	*Door holder receptacles* (two each) engage the door holders and secure the rear doors in the fully open position.
10	*Side stowage doors* (two each) provide access to stowage areas on the left and right sides of the vehicle.
11	*Stowage compartment latches* (four each) secure the side stowage doors in the closed position.
12	*Lifting shackles* (located at front and rear of vehicle) are used to tie down the vehicle during transport operations.
13	*Backup light assembly* (two each) provides warning to personnel standing at the rear of the vehicle and light for vehicle operator when backing up ambulance.
14	*Trailer receptacle* provides electrical power to towed equipment.
15	*Rear step assembly* lowers and folds out to provide easy access to ambulance interior. Step assembly must be in stowed position before closing rear doors in preparation for movement.
16	*Litter stowage compartment* provides stowage for litters and litter rail extension.
17	*Stowage compartment latch* secures litter stowage compartment cover in closed position.
18	*Door holders* (two each) engage receptacles on side of ambulance body to secure rear doors in open position.
19	*Rear door handles* (two each) are turned to the horizontal position to unlatch rear doors and to the vertical position to latch rear doors. Ensure that doors are closed and handles are securely latched before placing vehicle in motion.

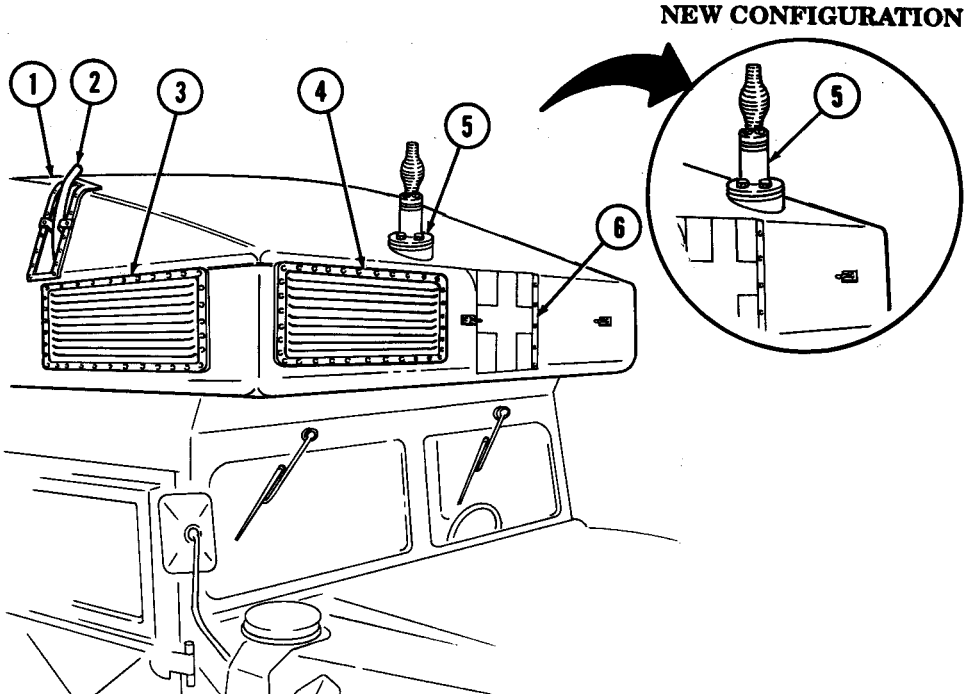
NEW CONFIGURATION
1
2
3
4
5
6
5

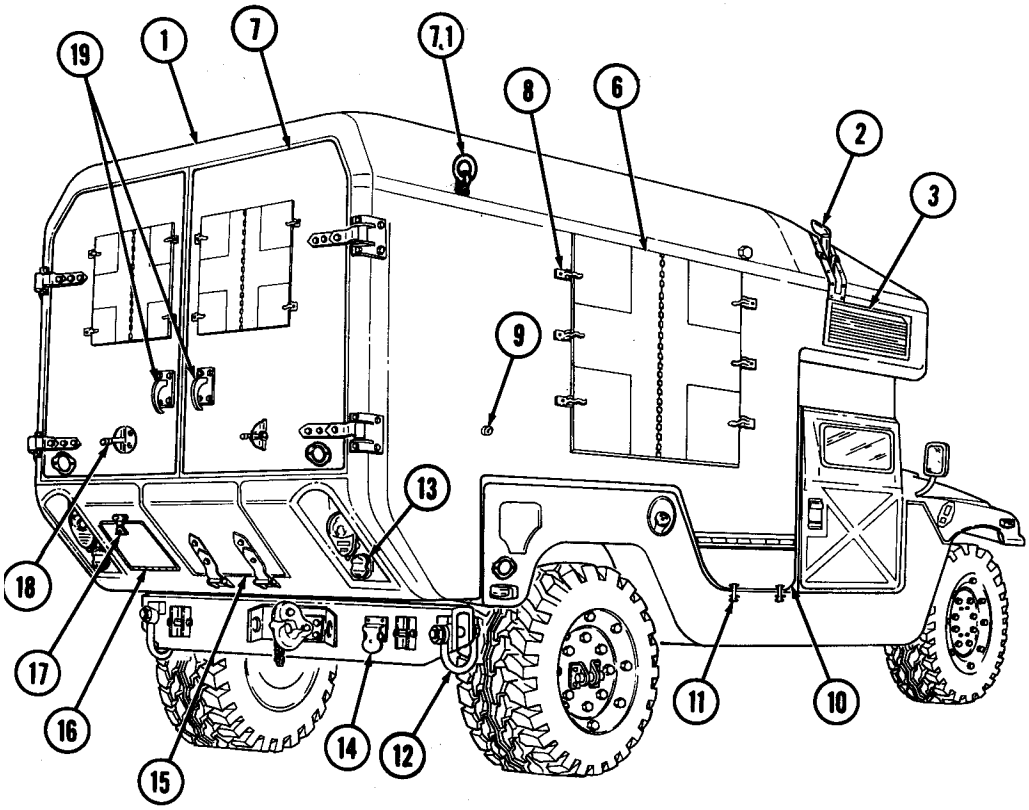
19
1
7
7.1
8
6
2
3
9
13
18
17
16
15
14
12
11
10

KEY	ITEM AND FUNCTION
1	*Safety strap* secures the rear step assembly in the stowed position.
2	*Rear step retractor assembly* provides a lift boost for raising the rear step assembly into stowed position.
3	*Rear step assembly* lowers and folds out to provide easy access to ambulance interior. Step assembly is secured in stowed position with safety strap and rear step latch assembly. Step assembly must be in stowed position before closing rear doors in preparation for movement.
4	*Blackout switch assembly* activates interior blackout lights and extinguishes white ceiling lights and spotlights when rear step assembly is lowered and interior lights switch is set to either "NORMAL" or "B/O."
5	*Rear step strikers* (two each) engage rear step latch assemblies to secure rear step assembly in stowed position.
6	*Rear step latch assemblies* (two each) engage rear step strikers to secure rear step assembly in stowed position.
7	*Rear step latch cable* is pulled to release rear step strikers so rear step assembly can be lowered.
8	*Bottom step* becomes an attendant’s seat when rear step assembly is in stowed position.
9	*Safety strap attachment hole* is connecting point for safety strap when rear step assembly is in the stowed position.
10	*Rear step knob* secures pivoting lower step in fully lowered position or stowed position.
11	*Retention cable assemblies* (two each) provide support for rear step assembly in lowered position.

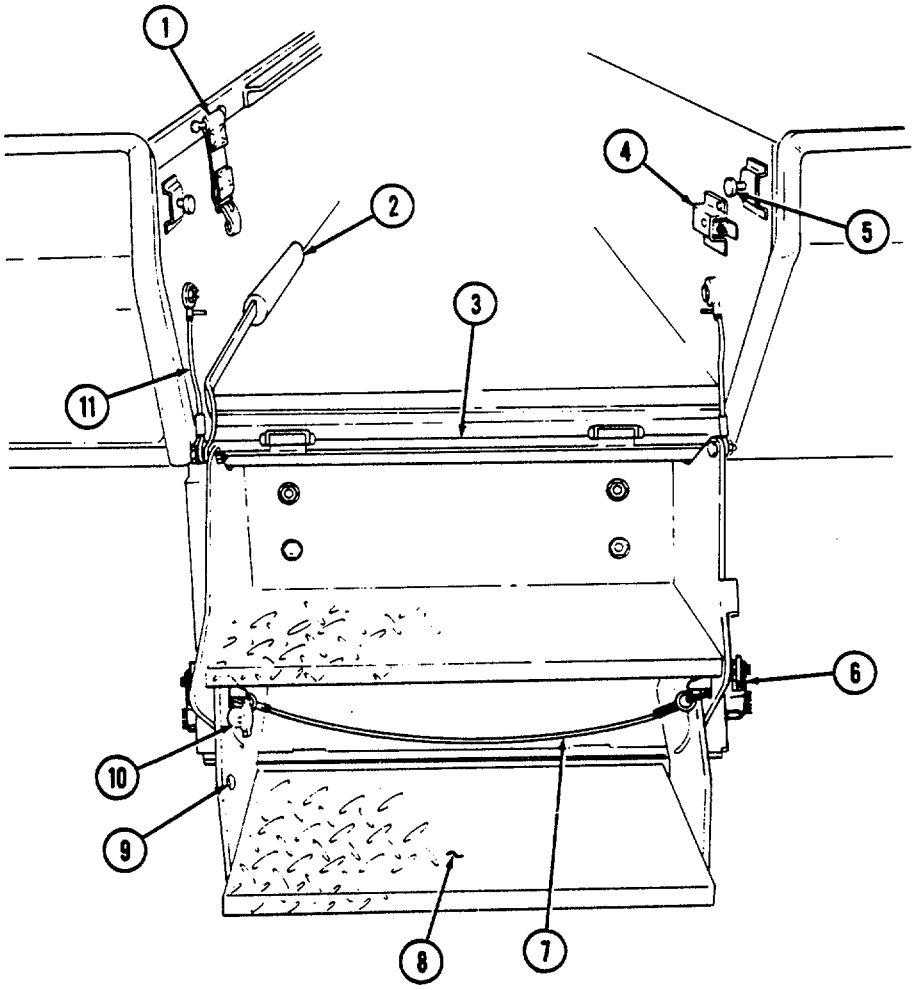
1
2
3
4
5
6
7
8
9
10
11

KEY	ITEM AND FUNCTION
1	*Air-conditioning louvers* (six each) can be adjusted to direct cool air into patient area.
2	*Bulkhead door latch assembly* secures bulkhead door in open position.
3	*Electrical control panels* provide centralized control of lighting, heating, and cooling for ambulance interior.
4	*Blackout lamp* (one per side) provides blue light illumination during blackout conditions.
5	*Heater, A/C, and vent operation data plate* provide instructions for operating heating, air-conditioning, and ventilation systems within the ambulance interior.
6	*Strap assemblies* (two per side) provide a handhold to enable patients and attendant to move around when vehicle is in motion.
7	*Ceiling lamps* (two per side) provide white light illumination for ambulance interior.
8	*Litter handle bumpers* (eight per side) protect litter handles from damage and restrict litter movement when ambulance is in motion.
9	*Oxygen cylinder straps, footman loops, and bumpers* provide stowage for two oxygen cylinders on each bulkhead.
10	*Attendant seat bracket and strap assembly* provide stowage for attendant seat.
11	*Spineboard bracket and strap assembly* provide stowage for short spineboard.
12	*24-volt receptacle* (two each) provides a 24-VDC electrical source for ambulance accessories. The other 24-volt receptacle is located on the electrical control panel.
13	*Litter skids* provide a track to guide litter into position on litter rack.
14	*Stowage covers* (two each) secure and cover equipment stowed under lower litter rack. Each cover is secured by five turnbuttons.
15	*Heater vents* (four each) direct heated air into ambulance compartment.
16	*Medical cabinet doors and hasps* (two each) provide secure stowage areas for medical supplies and equipment.
17	*Bulkhead doors* (two each) provide walk-through access between vehicle cab and ambulance interior. Left bulkhead door must be closed before right door is closed and latched.
18	*Bulkhead door handle* latches bulkhead door closed when handle is turned to vertical position.
19	*Portable heart monitor stowage* provides storage area for portable heart monitor.

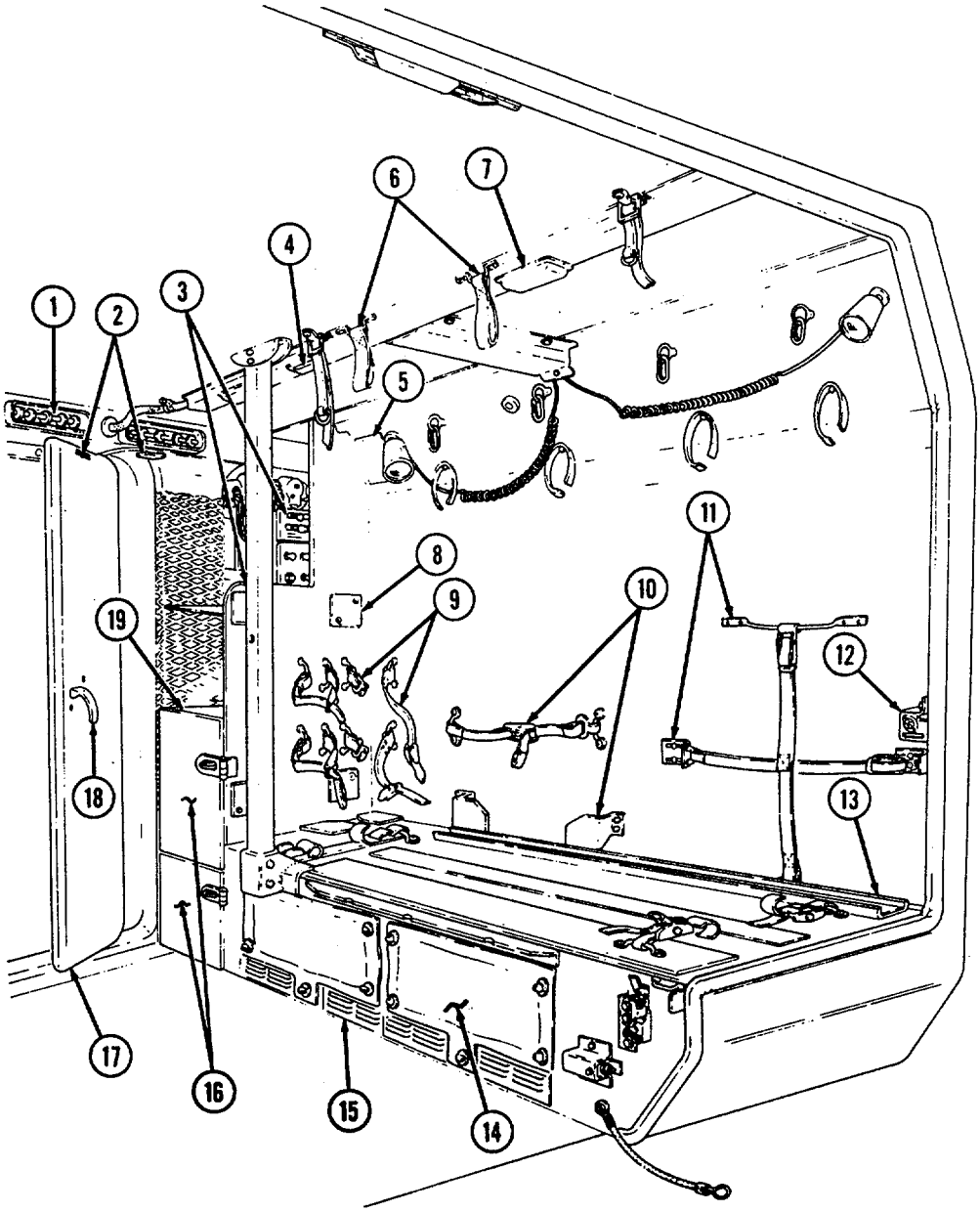
1
2
3
4
5
6
7
8
9
10
11
12
13
14
15
16
17
18
19

KEY	ITEM AND FUNCTION
1	*Upper litter rack* (one per side) provides additional litter capacity, and when folded downward, provides backrest for ambulatory patients.
2	*Spotlight assembly* (two per side) provides a movable source of illumination. Switch on back of spotlight assembly activates light when interior light switch is activated.
3	*IV bag hangers* (four per side) provide suspension point for patient IV bag.
4	*IV bag stowage straps* (four per side) secure IV bag in stowed position.
5	*Upper litter rack ring* (two per side) is the attaching point for litter rack support straps.
6	*Litter rack support straps* (two per side) support upper litter rack.
7	*Spotlight mount* (five per side) provides mounting points for movable spotlights. Three wall mounts and two mounts located on the underside of upper litter rack are located on each side of ambulance.
8	*Rear door blackout switch* activates interior blackout lights and extinguishes all interior white light illumination when rear doors are opened and interior lights switch is set to either "NORMAL" or “B/O."
9	*Litter rack front latch,* when activated, releases front striker to allow upper litter rack to lower to backrest position.
10	*Litter rack front striker* engages litter rack front latch assembly to secure upper litter rack in raised position.
11	*Bulkhead door blackout light switch* activates interior blackout lights and extinguishes all interior white light illumination when bulkhead doors are opened and interior lights switch is set to either “NORMAL" or “B/O."
12	*NBC heaters* (five in ambulance body, two in cab) provide a flow of heated, filtered air to NBC protective masks worn by crew and patients.
13	*Aspirator/resuscitator stowage brackets* secure aspirator/resuscitator in stowed position.
14	*Front litter rack straps* (four per side) secure front litter handles to litter rack.
15	*Litter rack tension strap* applies tension to upper litter rack to restrict movement of litter rack during vehicle movement.
16	*Rear litter rack straps* (four per side) secure rear litter handles to litter rack.
17	*Spineboard bracket and strap assembly* provides stowage for long spineboard.
18	*Upper litter rack rear latch assembly* (one per side) when unlocked and depressed allows rear of upper litter rack to be lowered to ease loading of patients.
19	*Litter rack handle* slides out to ease loading of patients into upper litter rack.

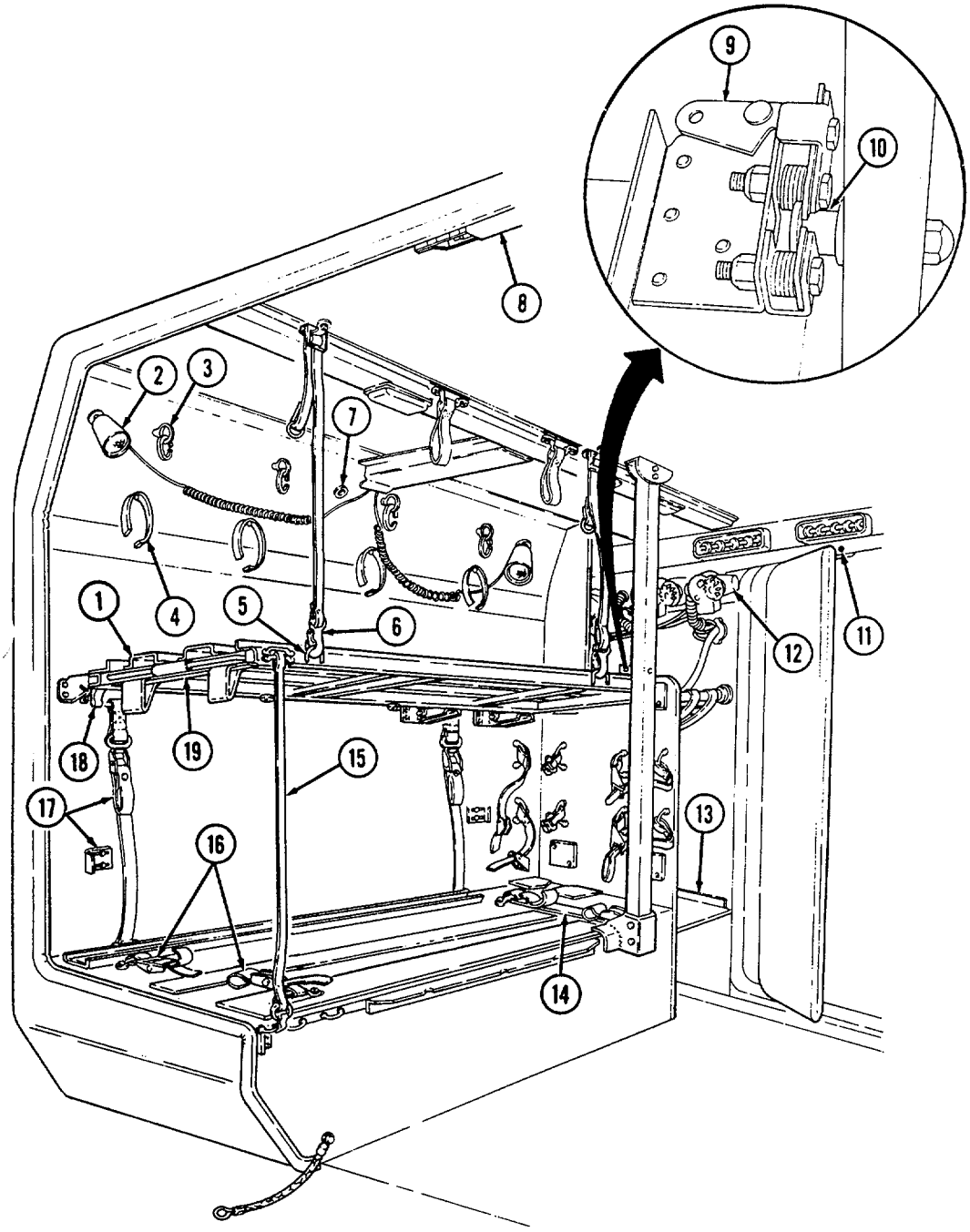
1
2
3
4
5
6
7
8
9
10
11
12
13
14
15
16
17
18
19

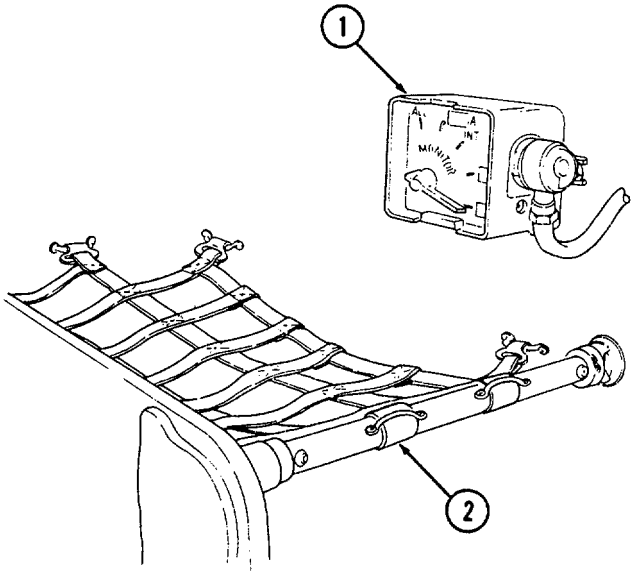

KEY	ITEM AND FUNCTION
1	*Intercom control* (C-2298/VRC) provides communication with the driver and radio control facilities when used with an M24 series protective mask, radio handset, or other audio accessories. A second intercom control is located in the cab on the radio rack.
2	*Web shelf net assembly* provides stowage area in front of bulkhead.

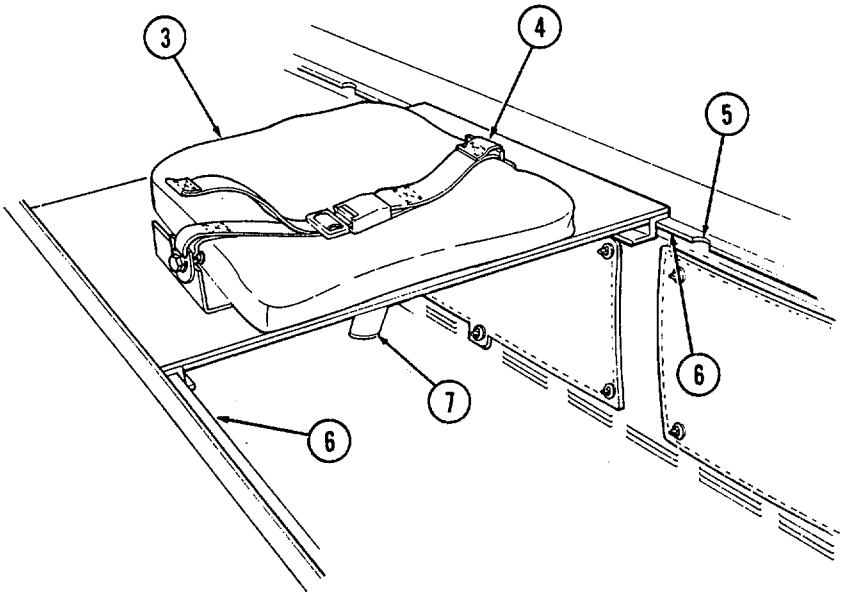

KEY	ITEM AND FUNCTION
3	*Attendant seat* slides along the attendant seat rails providing a sliding and removable seat for the ambulance attendant.
4	*Seatbelt assembly* secures the attendant to the attendant seat when ambulance is in motion.
5	*Rail notch* secures the attendant seat in one of three locations along the attendant seat rails.
6	*Attendant seat rails* (two each) provide a track along which the attendant seat can be positioned.
7	*Attendant seat latch* is pushed to the attendant's right to release the locking mechanism holding the attendant seat stationary at rail notch locations.

NEW CONFIGURATION

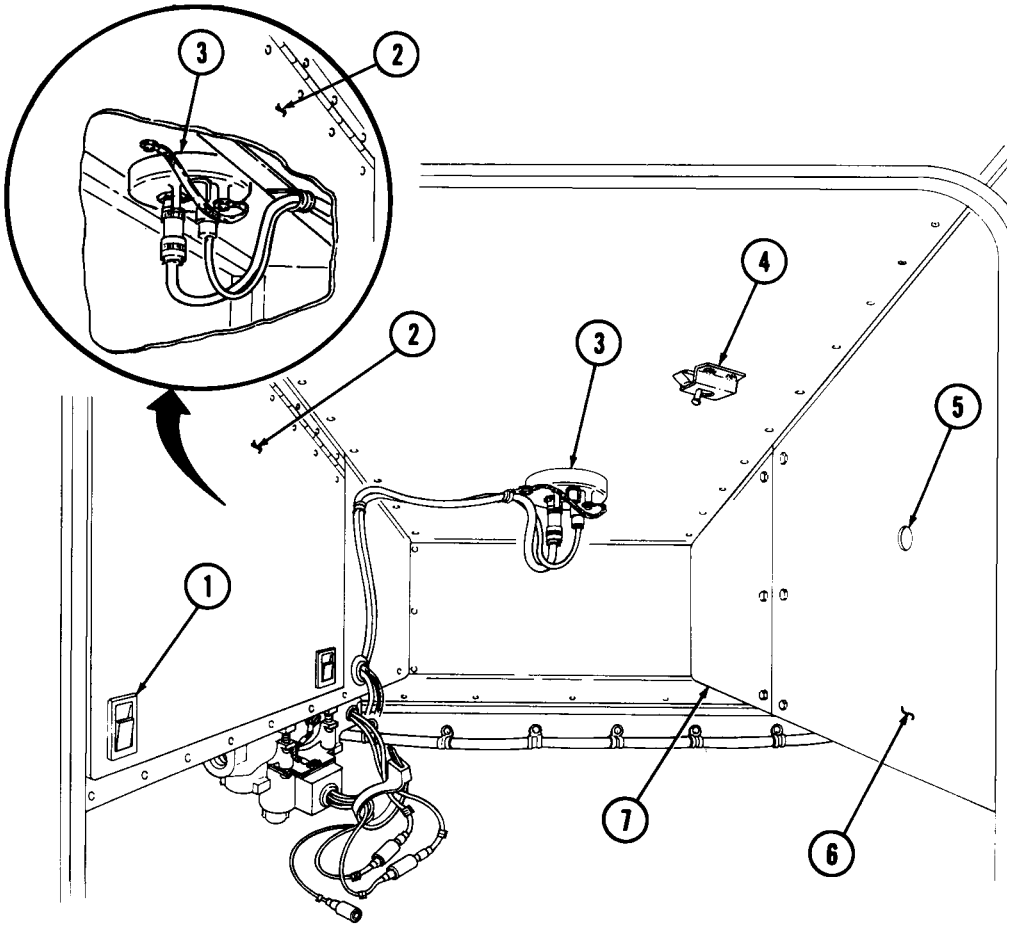

KEY	ITEM AND FUNCTION

NOTE

The following items are located in the crew compartment overhead.

1 *NBC door paddle handle* permits NBC door to be opened or closed.

2 *NBC door* provides access to gas-particulate filter unit and stowage area.

3 *Antenna base mount* provides mounting for AS-1729/VRC antenna and cabling.

4 *NBC door latch* secures NBC door in open position.

5 *Air-conditioner sight glass* allows vehicle operator to visually check status of air-conditioning charging condition.

6 *Heating, ventilating, and air-conditioning (HVAC) system compartment door* provides access to HVAC components.

7 *Air intake filter door* provides access to air-conditioner air intake filter.

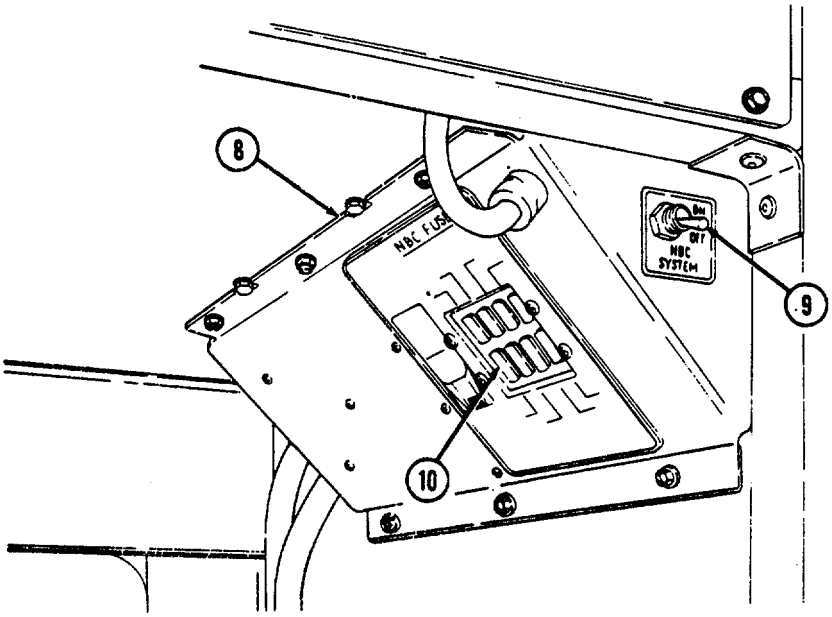

KEY	ITEM AND FUNCTION

NOTE

The NBC control box for the M997, M997A1, and M997A2 ambulance has seven heater fuses and one spare fuse.

8 *NBC control box* houses circuitry and controls for the collective NBC protection system.

9 *NBC system switch* controls operation of the collective NBC protection system.

10 20 amp fuses protect NBC heater circuits from overload damage.

j. Two-Litter Ambulance (M996 and M996A1) Equipment.

KEY	ITEM AND FUNCTION
1	*Two-litter ambulance* provides transport for up to six ambulatory patients or two litter patients and two attendants. The ambulance has armor protection, self-contained heating and ventilation, and collective NBC protection for crew and patients.
2	*Heater exhaust pipe* vents exhaust gases from ambulance heater.
3	*Antenna base mount* provides support for AS-1729/VRC antenna.
4	*Heater intake louver* provides air intake for heating and ventilating systems.
5	*Rear door vent* provides ventilation for patient compartment.
6	*Rear doors* (two each) provide access for patients and crew into the ambulance. The right rear door must be opened first, and closed last, when entering or leaving the vehicle. Ensure that the door is securely closed and latched before placing the vehicle in motion.
6.1	*Spreader bar tiedowns* (two each) are used during transport operations.
7	*Door holder receptacles* (two each) engage the door holders and secure the rear doors in the fully open position.
8	*Placard retaining clips* (eight each) hold the red cross placards in open position or folded when the vehicle is used for non-ambulance operations.
9	*Red cross placards* are at five locations on the ambulance; one each on the right rear door, sides, front, and top of ambulance body.
10	*Stowage compartment latches* (four each) secure the side stowage doors in the closed position.
11	*Side stowage doors* (two each) provide exterior stowage areas on the left and right sides of the vehicle.
12	*Lifting shackles* (located at front and rear of vehicle) are used to tie down the vehicle during transport operations.
13	*Backup light assembly* (two each) provide warning to personnel standing at the rear of the vehicle and light for vehicle operator when backing up ambulance.
14	*Trailer receptacle* provides electrical power to towed equipment.
15	*Rear step assembly* lowers and folds out to provide easy access to ambulance interior. Step assembly must be in stowed position before closing rear doors in preparation for movement.
16	*Litter stowage compartment* provides stowage for litters and litter rail extension.
17	*Stowage compartment latch* secures litter stowage compartment cover in closed position.
18	*Door holders* (two each) engage receptacles on side of ambulance body to secure rear doors in open position.
19	*Rear door handles* (two each) are turned to the horizontal position to unlatch rear doors, and to the vertical position to latch rear doors. Ensure that doors are closed and handles are securely latched before placing vehicle in motion.

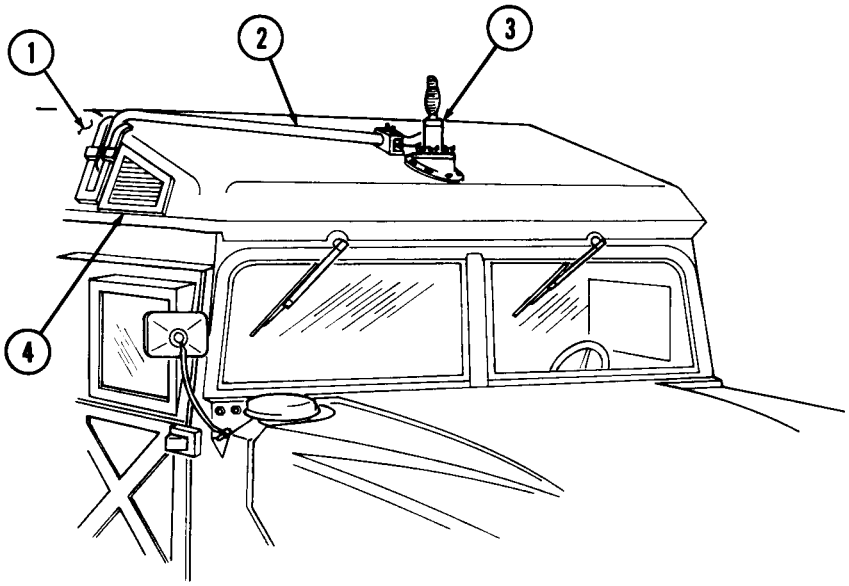
1
2
3
4

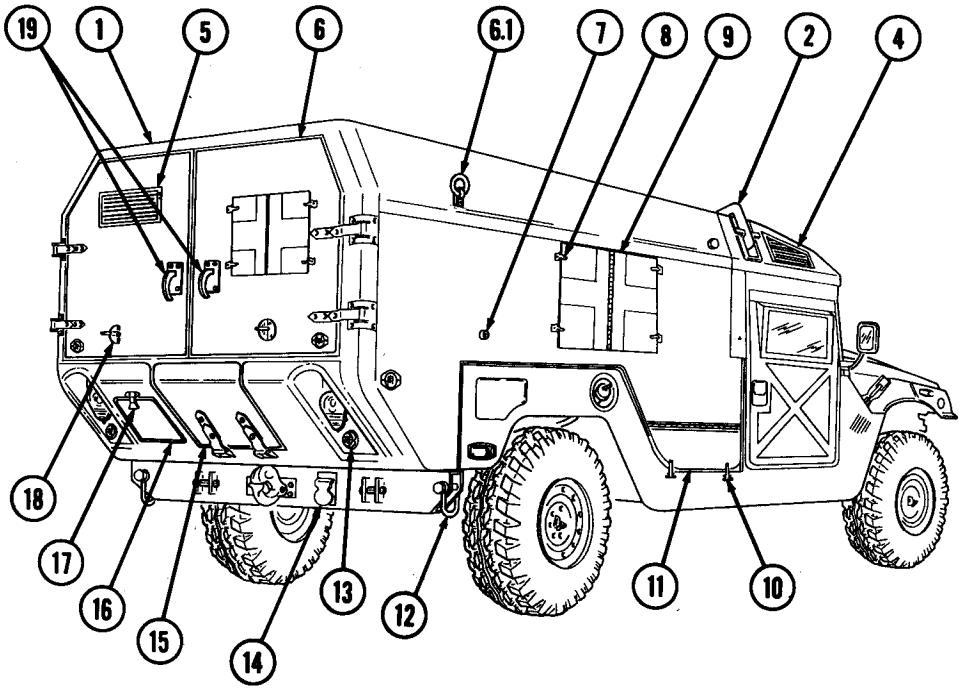
19
1
5
6
6.1
7
8
9
2
4
18
17
16
15
14
13
12
11
10

KEY	ITEM AND FUNCTION
1	*Electrical control panels* provide centralized control of lighting, heating, and ventilation for ambulance interior.
2	*Blackout lamp* (one per side) provides blue light illumination during blackout conditions.
3	*Strap assemblies* (four per side) provide an assist to patients and crew when moving about in ambulance interior.
4	*Ceiling lamps* (two per side) provide white light illumination for ambulance interior.
5	*Splint set stowage strap assemblies* (two each) secure splint set in stowed position.
6	*Oxygen cylinder straps, footman loops, and bumpers* provide stowage for oxygen cylinders on each bulkhead.
7	*Attendant seat bracket and strap assembly* provides stowage for attendant seat.
8	*Attendant seat* shown in stowed position. When installed on attendant seat rails, provides a movable seat for ambulance attendant.
9	*Spineboard bracket and strap assembly* provides stowage for short spineboard.
10	*Medical instrument and supply set stowage strap assembly* (two per side) secures medical instruments and supplies in stowage.
11	*24-volt receptacle* (two each) provides a 24-VDC electrical source for ambulance accessories. The other 24-volt receptacle is located on the electrical control panel.
12	*Ambulatory patient seat latch* (one per side) secures folding patient seat back in closed position.
13	*Ambulatory patient seat* provides seating for three ambulatory patients on each side of ambulance.
14	*Stowage area under litter rack* provides additional stowage space.
15	*Portable heart monitor stowage* provides storage area for portable heart monitor.
16	*Bulkhead doors* (two each) provide walk-through access between vehicle cab and ambulance interior. Left bulkhead door must be closed before right door is closed and latched.
17	*Shelf assembly* provides area in front of bulkhead for blanket kit and splint kit stowage.
18	*Bulkhead door handle* latches bulkhead door closed when handle is turned to vertical position.
19	*Heater/fresh air vent* directs heated air during heater operation or fresh air if ventilation system is activated.
20	*Blanket set stowage strap assembly* secures medical blanket set in stowed position.

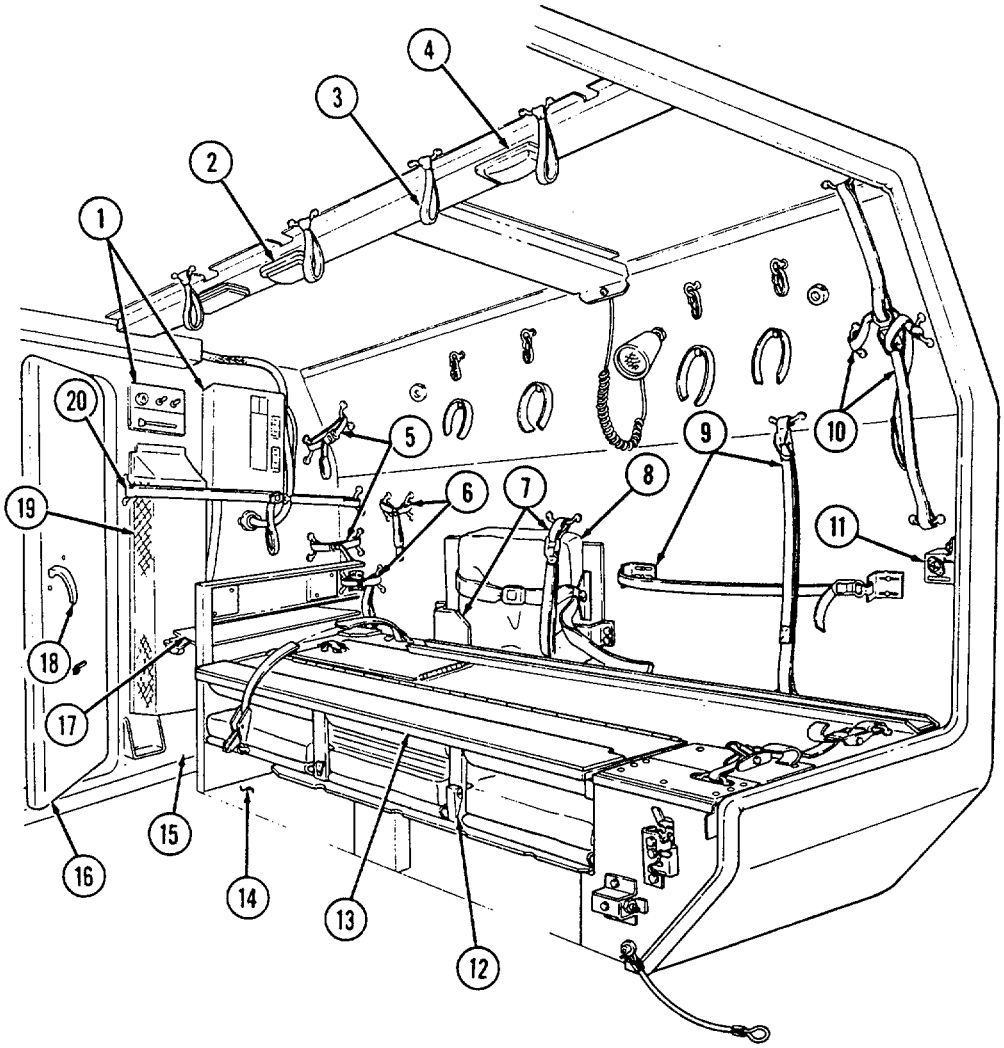
1
2
3
4
5
6
7
8
9
10
11
12
13
14
15
16
17
18
19
20

KEY	ITEM AND FUNCTION
1	*Spotlight mount* (three per side) provides mounting points for movable spotlights.
2	*IV bag hangers* (four per side) provide suspension points for patient IV bags.
3	*IV bag stowage straps* (four per side) secure IV bags in stowed position.
4	*Spotlight assembly* (one per side) provides a movable source of illumination. Switch on back of spotlight assembly activates light when interior light switch is activated.
5	*Rear door blackout switch* activates interior blackout lights and extinguishes all interior white light illumination when rear doors are opened and interior lights switch is set to either “NORMAL" or "B/O."
6	*Intercom control* (C-2298/VRC) provides communication with the driver and radio control facilities when used with an M24 series protective mask, radio handset and speaker, or other audio accessories. A second intercom control is located in the cab.
7	*NBC heaters* (three in ambulance body, two in cab) provide a flow of heated, filtered air to NBC protective masks worn by crew and patients.
8	*Bulkhead door blackout light switch* activates interior blackout lights and extinguishes all interior white light illumination when bulkhead doors are opened and interior lights switch is set to either “NORMAL" or "B/O".
9	*Litter handle bumpers* (four per side) protect litter handles from damage and restrict litter movement when ambulance is in motion.
10	*Front litter rack straps* (one per side) secure front litter handles to litter rack.
11	*Aspirator/resuscitator stowage brackets* secure aspirator/resuscitator in stowed position.
12	*Bulkhead door latch assembly* secures bulkhead door in open position.
13	*Medical stowage cover latch* secures stowage cover in closed position.
14	*Medical stowage cover* secures medical stowage in compartment beneath litter rack.
15	*Litter skids* (two each) provide a track to guide litter into position on litter rack.
16	*Rear litter rack straps* (two per side) secure rear litter handles to litter rack.
17	*Spineboard bracket and strap assembly* provide stowage for long spineboard.

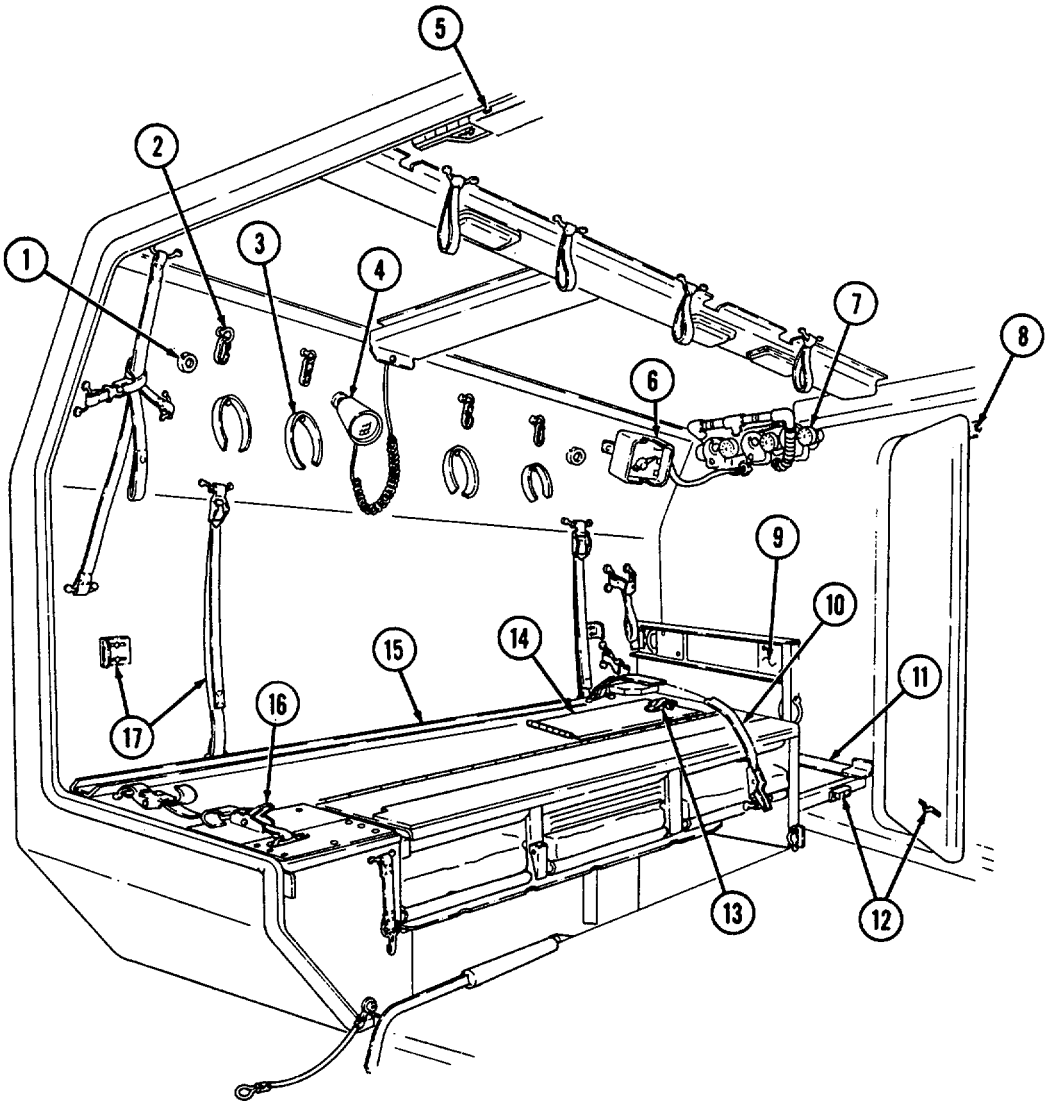
1
2
3
4
5
6
7
8
9
10
11
12
13
14
15
16
17

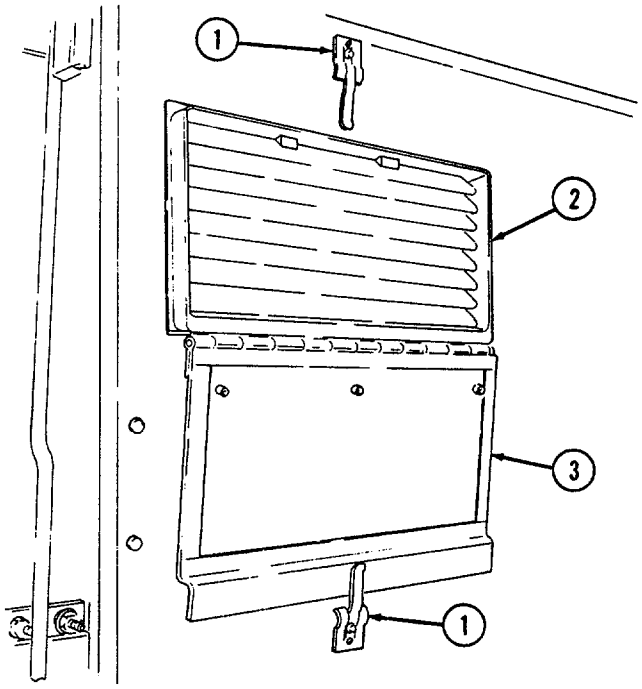

KEY	ITEM AND FUNCTION
1	*Vent cover retaining clips* (two each) secure vent cover in either open or closed position.
2	*Rear door vent* provides fresh air ventilation for ambulance interior, or can serve as an exhaust vent when used in conjunction with heating/ventilation system.
3	*Vent cover* opens to allow fresh air ventilation of ambulance interior.

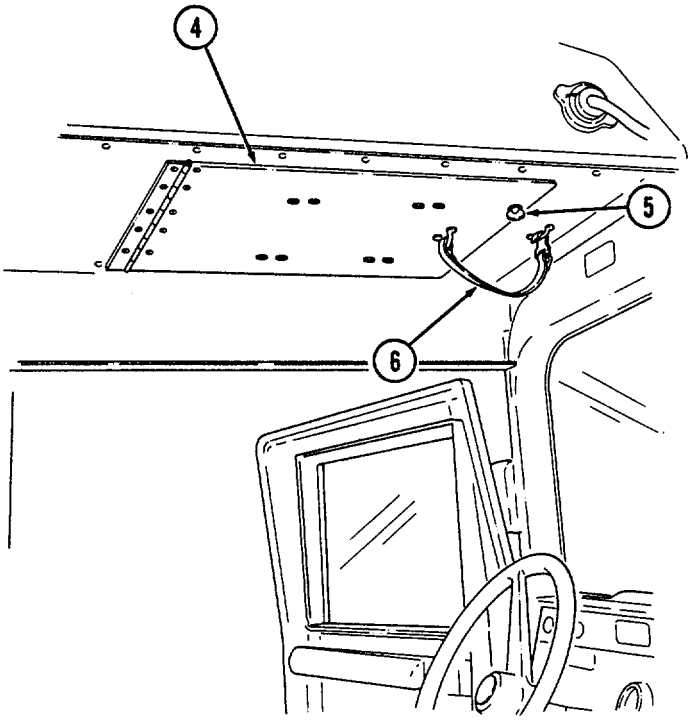

KEY	ITEM AND FUNCTION
4	*NBC door* provides access to gas-particulate filter unit.
5	*Wing head screws* (two each) secure NBC door in closed position.

WARNING

NBC door strap must be in good condition and properly installed to prevent injury to personnel in driver's position or damage to equipment.

6	*NBC door strap* acts as a safety strap to prevent NBC door from accidentally opening and injuring driver.

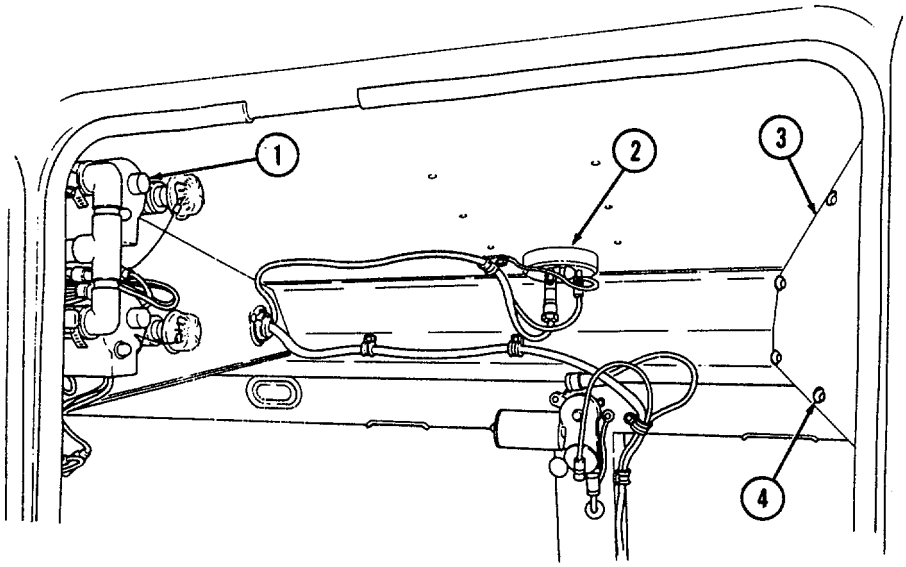

KEY	ITEM AND FUNCTION
1	*NBC heaters* (three in ambulance body, two in cab) provide a flow of heated, filtered air to NBC protective masks worn by crew and patients.
2	*Antenna base mount* provides mounting for AS-1729/VRC antenna and cabling.
3	*Heating and ventilating system compartment door* provides access to heating and ventilating system components.
4	*Wing head screws* (seven each) secure heating and ventilating system compartment door in closed position.

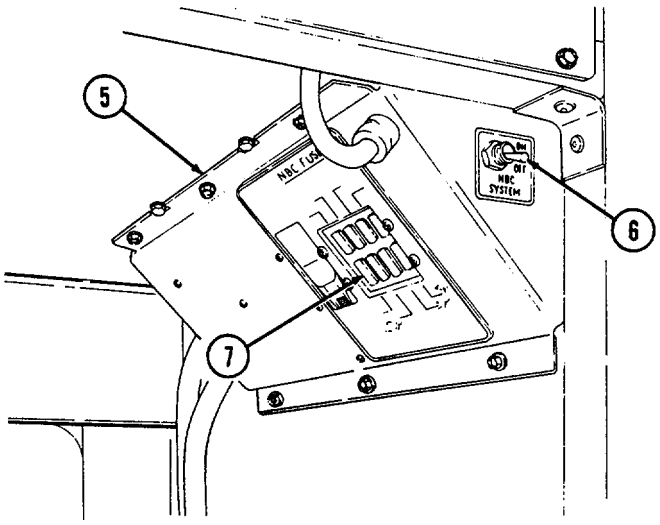

KEY	ITEM AND FUNCTION

NOTE

The NBC control box for the M996 and M996A1 ambulance has five heater fuses and one spare fuse.

5 *NBC control box* houses circuitry and controls for the collective NBC protection system.

6 *NBC system switch* controls operation of the collective NBC protection system.

7 *20 amp fuses* protect NBC heater circuits from overload damage.

KEY	ITEM AND FUNCTION
1	*Safety strap* secures the rear step assembly in the stowed position.
2	*Rear step retractor assembly* provides a lift boost for raising the rear step assembly into stowed position.
3	*Rear step assembly* lowers and folds out to provide easy access to ambulance interior. Step assembly is secured in stowed position with safety strap and rear step latch assembly. Step assembly must be in stowed position before closing rear doors in preparation for movement.
4	*Blackout switch assembly* activates interior blackout lights and extinguishes white ceiling lights and spotlights when rear step assembly is lowered and interior lights switch is set to either “NORMAL" or “B/O.”
5	*Rear step strikers* (two each) engage rear step latch assemblies to secure rear step assembly in stowed position.
6	*Rear step latch assemblies* (two each) engage rear step strikers to secure rear step assembly in stowed position.
7	*Rear step latch cable* is pulled to release rear step strikers so rear step assembly can be lowered.
8	*Bottom step* becomes an attendant's seat when rear step assembly is in stowed position.
9	*Safety strap attachment hole* is connecting point for safety strap when rear step assembly is in the stowed position.
10	*Rear step knob* secures pivoting lower step in fully lowered position or stowed position.
11	*Retention cable assembly* (two each) provides support for rear step assembly in lowered position.

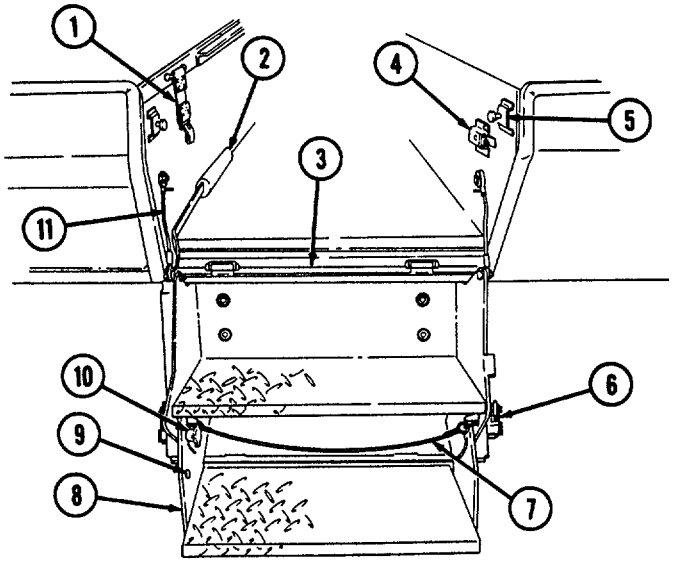

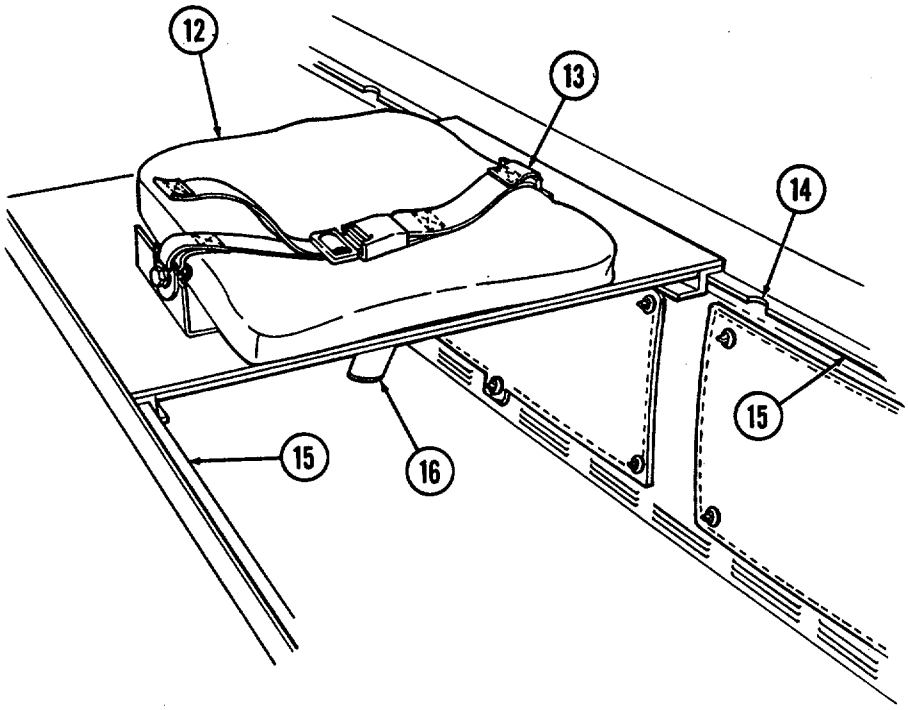

KEY	ITEM AND FUNCTION
12	*Attendant seat* slides along the attendant seat rails, providing a sliding and removable seat for the ambulance attendant.
13	*Seatbelt assembly* secures the attendant to the attendant seat when ambulance is in motion.
14	*Rail notch secures* the attendant seat in one of three locations along the attendant seat rails.
15	*Attendant seat rails* (two each) provide a track along which the attendant seat can be positioned.
16	*Attendant seat latch* is pushed to the attendant's right to release the locking mechanism holding the attendant seat stationary at rail notch locations.

k. Troop/Cargo Winterization Kit Equipment.

KEY	ITEM AND FUNCTION
1	*Diverter assembly (damper*) regulates amount of fresh outside air, interior air, or a mixture of both to be circulated through the heater assembly.
2	*Heater guard assembly* protects personnel from accidental contact with hot heater components.
3	*Heater* provides a flow of heated air to interior of troop/cargo enclosure assembly.
4	*Heater deflector* directs heated air from heater to all areas of troop/cargo enclosure assembly.
5	*Circuit breaker* protects heater assembly from damage caused by electrical overloading. The circuit breaker is waterproof and automatically resets.
6	*Heater control assembly* operates heater and controls blower motor speed.

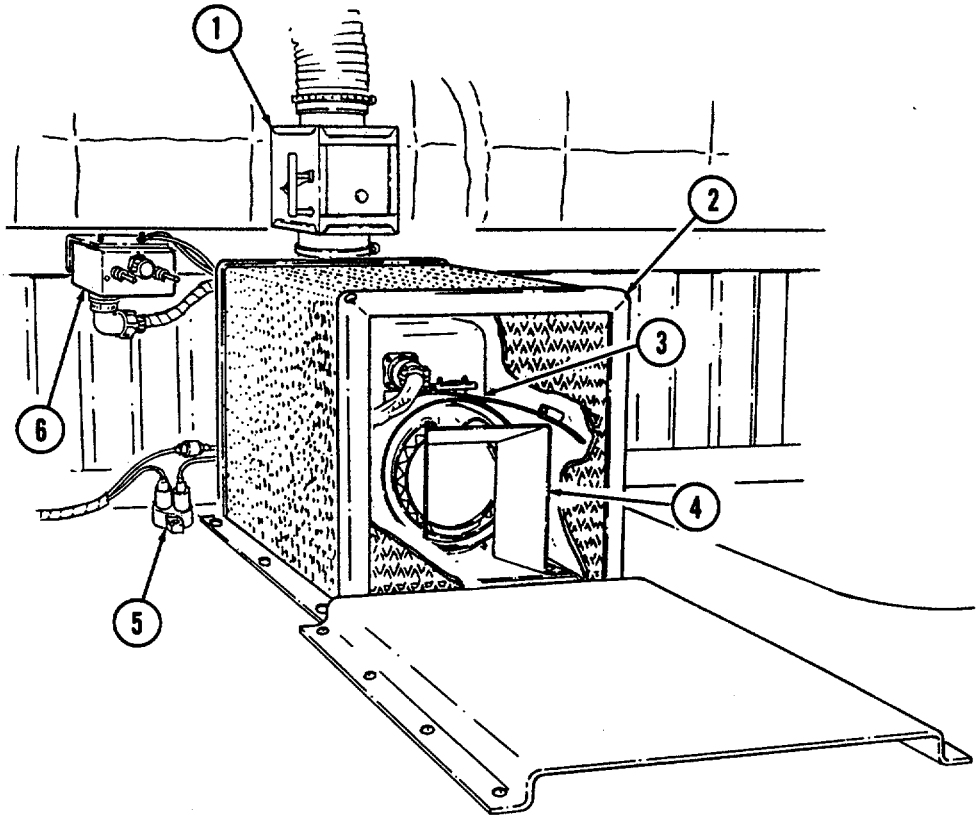

KEY	ITEM AND FUNCTION
7	*Dome light* provides white light illumination for interior of top enclosure assembly.
8	*Blackout light* provides blue light illumination for interior of top enclosure assembly during blackout conditions.
9	*Heater data plate* provides heater operating instructions.
10	*Blackout/dome light switch* controls operation of blackout lights and dome lights.
11	*Door switch assembly* activates blackout light or dome light when door is in closed position.

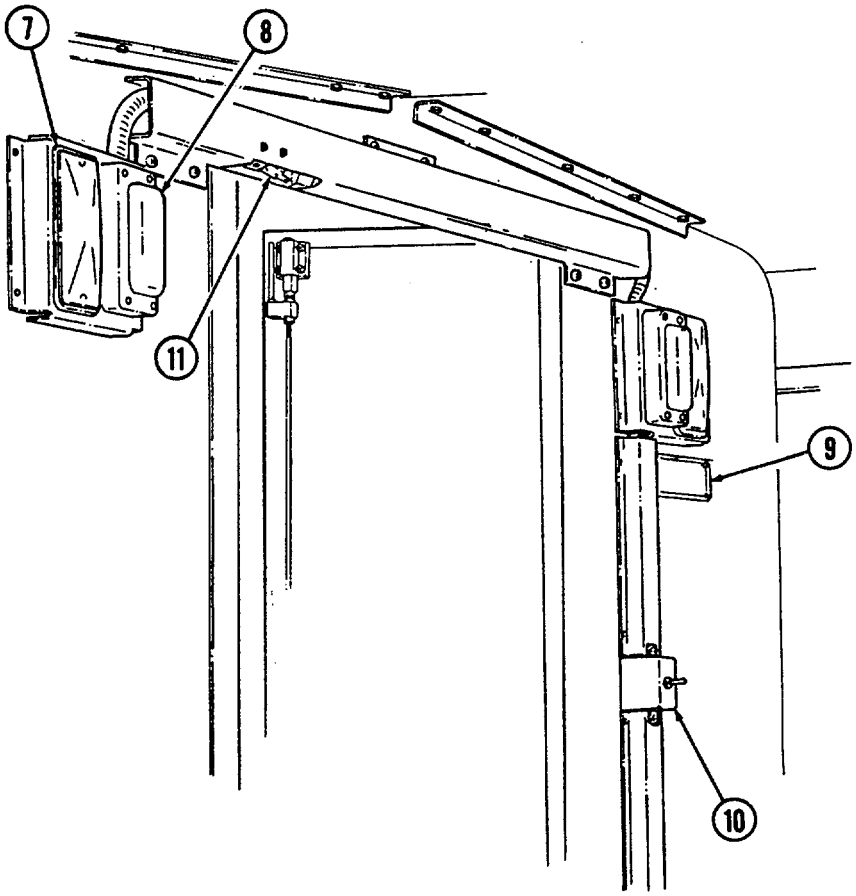

KEY	ITEM AND FUNCTION
1	*Rear door* provides access into enclosure assembly for personnel.
2	*Grab handle* serves as a grabbing point to assist personnel when entering into enclosure assembly.
3	*Antenna mounting bracket* provides mounting point for AS 1729/VRC antenna and AB-652/GR antenna.
4	*Trailer receptacle* provides electrical power to towed equipment.
5	*Fuel can mounting bracket* provides easily accessible storage location for fuel can.
6	*Door handle* is turned to the horizontal position to unlatch rear door and to the vertical position to latch rear door. Door should be closed and securely latched before placing vehicle in motion.

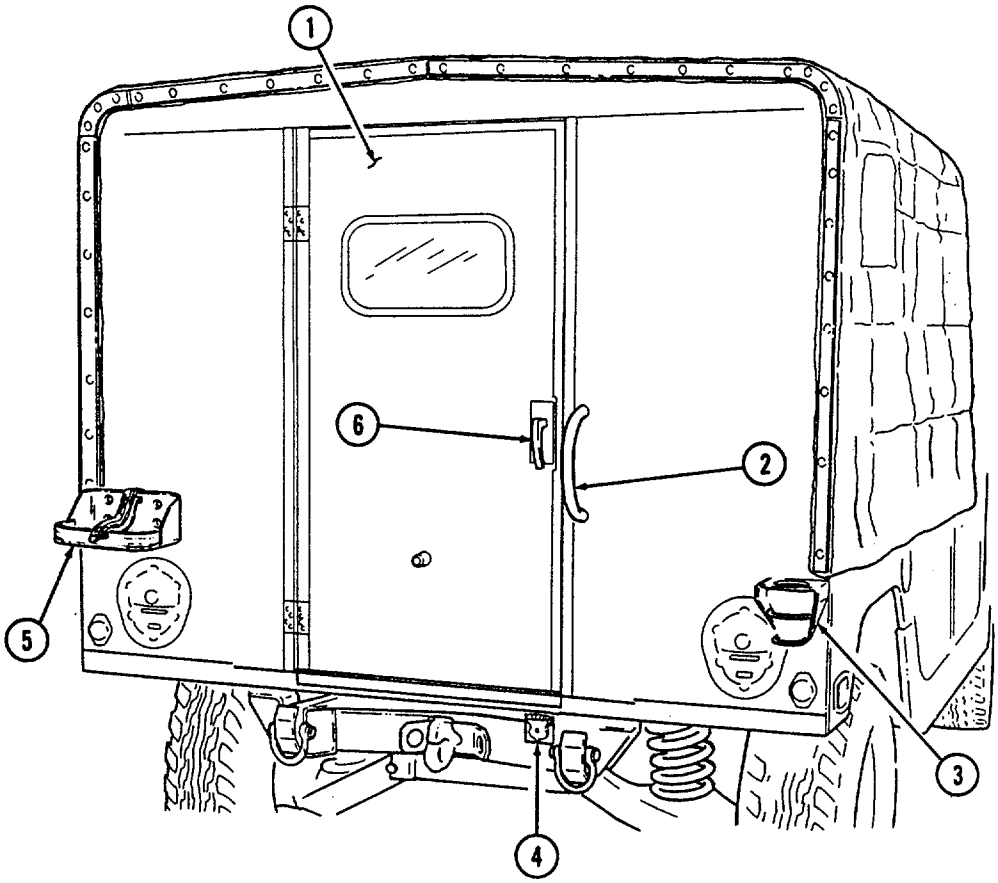

KEY	ITEM AND FUNCTION
7	*Skid strips* allow cargo to be easily loaded and unloaded from vehicle.
8	*Rear step assembly* lowers and folds out to provide easy access to interior of top enclosure assembly. Step assembly must be in stowed position before closing rear door in preparation for vehicle movement.

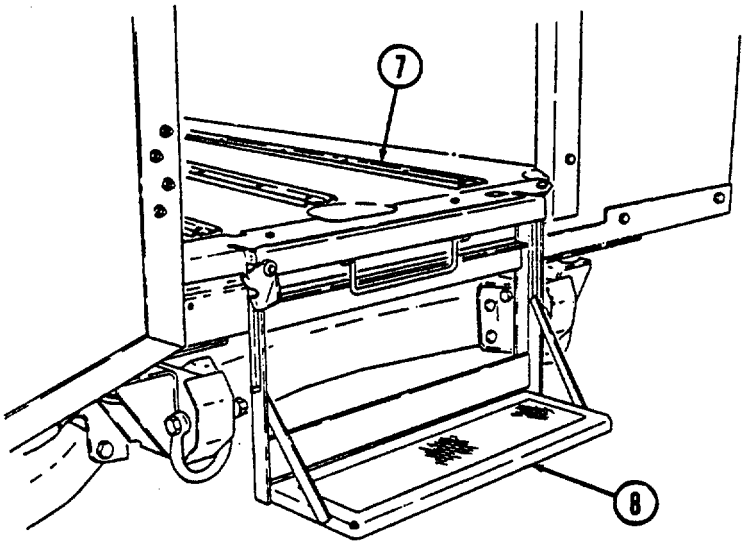

9	*Blackout curtain* blocks light illumination from inside top enclosure assembly.

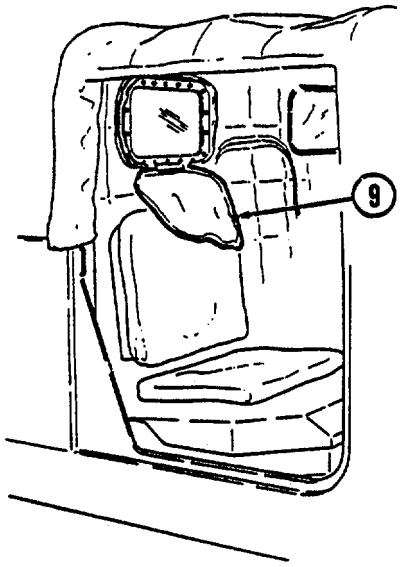

SECTION II. PREVENTIVE MAINTENANCE CHECKS AND SERVICES

2-3. GENERAL

A permanent record of the services, repairs, and modifications made to these vehicles must be recorded. (Army) See DA Pam 738-750 for a list of the forms and records required and how to complete them. (Marine Corps) Refer to TM 4700-15/1 series.

2-4. CLEANING INSTRUCTIONS

a. Cleaning is an after operation service performed by the operator/crew to keep the vehicle in a state of readiness. Facilities and material available to operators for vehicle cleaning can vary greatly in differing operating conditions. However, vehicles must be maintained in as clean a condition as available cleaning equipment, materials, and tactical situations permit.

WARNING

- Drycleaning solvent is flammable and will not be used near an open flame. A fire extinguisher will be kept nearby when the solvent is used. Use only in well-ventilated places. Failure to do this may result in injury to personnel and/or damage to equipment.
- Protective gloves, clothing, and/or respiratory equipment must be worn whenever caustic, toxic, or flammable cleaning solutions are used. Failure to do this may result in injury to personnel and/or damage to equipment.

CAUTION

- Do not allow cleaning compounds to come into contact with rubber, leather, vinyl, or canvas materials. Damage to equipment will result.
- Do not use compressed air when cleaning vehicle interiors. Damage to equipment will result.
- Do not allow water to enter air cleaner assembly air intake weathercap. Damage to engine will occur.

NOTE

Remember to clean windshield wipers of debris on a regular basis to ensure proper vision.

b. Cleaning Materials. Detailed descriptions of specific cleaning compounds, cleaning solvents, drycleaning solutions, and corrosion-removing compounds are found in TM 9-247.

c. General Guidelines. Table 2-1 provides a general guide of cleaning materials used in removing contaminants from various parts of the vehicle.

Table 2-1. General Cleaning Instructions

Surface	Cleaning Materials Used to Remove		
	Oil/Grease	Salt/Mud/Dust/Debris	Surface Rust/Corrosion
Body	Detergent; water; rags.	Soapy water; soft brush; damp and dry rags.	Corrosion-removing compound; bristle brush; dry rags; and lubricating oil.*
Vehicle Interior (Metals)	Detergent; damp and dry rags.	Damp and dry rags.	Corrosion-removing compound; bristle brush; dry rags; and lubricating oil.*
Glass	Window cleaning compound; dry rags.	Window cleaning compound; dry rags.	Not applicable.
Ballistic Glass	Detergent; soapy water, plastic polish; dry rags.	Detergent; soapy water; plastic polish; dry rags.	Not applicable.
Plastic Windows	Soapy water; cream cleaner; dry rags.***	Soapy water; cream cleaner; dry rags.***	Not applicable.
NOTE For removal of fungus and mold on soft top vehicle windows, refer to para. 3-18.			
Vehicle Interior (Seats and Straps)	Water; damp and dry rags.	Soapy water; damp and dry rags.	Not applicable.
Frame	Detergent rinsed with water; dry rags.	Soapy water; damp and dry rags.	Corrosion-removing compound; wire brush; dry rags; and lubricating oil.*
Engine and Transmission	Drycleaning solvent; water; rags.	Soapy water; soft wire brush; damp and dry rags.	Bristle brush; warm water; and dry rags.
Radiator	Not applicable.	Low pressure water or air; soapy water; damp and dry rags.	Not applicable.
Oil Cooler	Not applicable.	Low pressure water or air; soapy water; damp and dry rags.**	Not applicable.
Master Cylinder	Detergent; rinsed with soapy water, dry rags.	Soapy water; damp and dry rags.	Not applicable.
Rubber Insulation	Damp and dry rags.	Damp and dry rags.	Not applicable.
Tires	Soapy water; damp rags.	Soapy water; damp rags.	Not applicable.
Wood	Detergent; water; damp and dry rags.	Low pressure water; soapy water; damp and dry rags.	Not applicable.

* After cleaning, apply light grade of lubricating oil to all unprotected surfaces to prevent continued rust.

** Cleaning between oil cooler and radiator. If more space is needed to clean mud and debris between the oil cooler and radiator, refer to unit maintenance.
Operator Participation. Operator may perform this cleaning procedure under the supervision of unit level maintenance.

***After cleaning window zippers, apply zipper lubricant (appendix D, item 29).

2-5. PREVENTIVE MAINTENANCE CHECKS AND SERVICES (PMCS)

a. Designated Intervals.

NOTE

Designated intervals are performed under usual operating conditions. PMCS intervals must be performed more frequently when operating under unusual conditions.

(1) BEFORE checks and services of PREVENTIVE MAINTENANCE must be performed prior to placing vehicle or its components in operation.

(2) DURING checks and services of PREVENTIVE MAINTENANCE must be performed while the vehicle and/or its components/systems are in operation.

(3) AFTER checks and services of PREVENTIVE MAINTENANCE are performed upon completion of mission.

(4) WEEKLY checks and services of PREVENTIVE MAINTENANCE are performed once every 7 days.

(5) MONTHLY checks and services of PREVENTIVE MAINTENANCE are performed once every 30 days.

b. Procedures.

(1) For troubleshooting malfunctions, refer to table 3-1 or notify your supervisor.

(2) Use DA Form 2404 or DA Form 5988-E (automated) and report malfunctions to unit maintenance at once.

(3) Tools included with vehicle are to be used when making PREVENTIVE MAINTENANCE checks and services. Wiping cloths are needed to remove dirt or grease.

(4) Refer to appropriate TMs for PMCS requirements on mounted systems (i.e., TOW missiles systems, radios, etc.).

c. Troublespots.

NOTE

Dirt, grease, oil, and debris may cover up a serious problem. Clean as you check. Following precautions printed on container, use drycleaning solvent (SD-3) on all metal surfaces. On rubber or plastic material, use soap and water.

(1) Check all bolts, nuts, and screws. If loose, bent, broken, or missing, either tighten or report conditions to unit maintenance.

(2) Look for loose or chipped paint, and rust or cracks at welds. Remove rust and loose paint, and spot paint as required. If a cracked weld is found, report situation to unit maintenance.

(3) Inspect electrical wires and connectors for cracked or broken insulation. Also look for bare wires, and loose or broken connections. Tighten loose connections. Report other problems to unit maintenance.

(4) Check hoses and fluid lines for wear, damage, and leaks. Ensure clamps and fittings are tight. (Refer to para. 2-6 for information on leaks.)

(5) Check hinges for security and operation.

(6) Check data, caution, and warning plates for security and legibility.

2-5. PREVENTATIVE MAINTENANCE CHECKS AND SERVICES (PMCS) (Cont'd)

d. Not Ready/Available. If a vehicle is not able to perform the mission, equipment will be reported as not ready/available. Refer to DA Pam 738-750.

e. Correct Assembly or Stowage. Check each component for installation as an assembly, in the right place, and with no missing parts.

2-6. FLUID LEAKAGE.

Wetness around seals, gaskets, fittings, or connections indicates leakage. A stain also denotes leakage. If a fitting or connector is loose, tighten it. If broken or defective, report it. Use the following as a guide:

a. Class I. Leakage indicated by wetness or discoloration, but not great enough to form drops.

b. Class II. Leakage great enough to form drops, but not enough to cause drops to drip from item being checked/inspected.

c. Class III. Leakage great enough to form drops that fall from the item being checked/inspected.

CAUTION

Operation is allowable with Class I or II leakage except for brake system. Any brake fluid leakage must be reported. WHEN IN DOUBT, NOTIFY YOUR SUPERVISOR. When operating with Class I or II leaks, check fluid levels more frequently. Class III leaks must be reported immediately to your supervisor or to unit maintenance. Failure to do this will result in damage to vehicle and/or components.

2-7. LUBRICATION REQUIREMENTS

For lubrication requirements and procedures, refer to appendix G.

Table 2-2. Preventive Maintenance Checks and Services

Item No.	Interval	Location Item to Check/ Service	Crewmember Procedure	Not Fully Mission Capable if:
			WARNING Always remember the WARNINGS, CAUTIONS, and NOTES before operating this vehicle and prior to PMCS. **NOTE** Perform your before, after, and weekly checks if: **a.** You are the assigned driver but have not operated the vehicle since the last weekly inspection. **b.** You are operating the vehicle for the first time. **c.** See separate manuals for smoke generator, TOW launcher, and radios.	

Table 2-2. Preventive Maintenance Checks and Services (Cont'd)

Item No.	Interval	Location Item to Check/ Service	Crewmember Procedure	Not Fully Mission Capable if:
1	Before	Left Front, Side Exterior	DRIVER **CAUTION** If leaks are detected in the area of the transfer case oil cooler, do not attempt to tighten retaining nuts; internal damage to the transfer case oil cooler may result. Notify unit maintenance. **NOTE** If leakage is detected, further investigation is needed to determine the location and cause of the leak. **a.** Visually check underneath vehicle for any evidence of fluid leakage. **b.** Visually check front and left side of vehicle for obvious damage that would impair operation.	**a.** Any brake fluid leak; class III leak of oil, fuel, or coolant. **b.** Any damage that will prevent operation.

Table 2-2. Preventive Maintenance Checks and Services (Cont'd)

Item No.	Interval	Location Item to Check/ Service	Crewmember Procedure	Not Fully Mission Capable If:
2	Before	Left Side Tires	DRIVER **WARNING** Operating a vehicle with a tire in an underinflated condition or with a questionable defect may lead to premature tire failure and may cause equipment damage and injury or death to personnel. Visually check tires for presence and under inflation.	Tire missing, deflated, or unserviceable.
3	Before	Rear Exterior	DRIVER **NOTE** If leakage is detected, further investigation is needed to determine the location and cause of the leak. **a.** Visually check underneath vehicle for evidence of fluid leakage. **b.** Visually check rear of vehicle for obvious damage that would impair operation. **c.** Inspect bumper supports for cracks before towing trailer.	**a.** Any brake fluid leak; class III leak of oil, fuel, or coolant. **b.** Any damage that would prevent operation. **c.** Any damage that would prevent operation.

Table 2-2. Preventive Maintenance Checks and Services (Cont'd)

Item No.	Interval	Location Item to Check/ Service	Crewmember Procedure	Not Fully Mission Capable if:
			DRIVER	
4	Before	Exhaust Louvers	(M996 and M996A1 only) Check air exhaust louvers to ensure they are clear and free of debris that would restrict air flow. Clean any dirt or debris from louvers.	
			DRIVER	
5	Before	Right Front, Side Exterior	**NOTE** If leakage is detected, further investigation is needed to determine the location and cause of the leak. **a**. Visually check underneath vehicle for evidence of fluid leakage. **b**. Visually check front and right side of vehicle for obvious damage that would impair operation.	**a**. Any brake fluid leak; class III leak of oil, fuel, or coolant. **b.** Any damage that would prevent operation.

Table 2-2. Preventive Maintenance Checks and Services (Cont'd)

Item No.	Interval	Location: Item to Check/ Service	Crewmember Procedure	Not Fully Mission Capable If:
6	Before	Right Side Tires	DRIVER **WARNING** Operating a vehicle with a tire in an underinflated condition or with a questionable defect may lead to premature tire failure and may cause equipment damage and injury or death to personnel. Visually check tires for presence and under inflation.	Tire missing, deflated, or unserviceable.
7	Before	Front	DRIVER **NOTE** If leakage is detected, investigation is needed to determine the location and cause of the leak. **a.** Visually check front of vehicle for obvious damage that would impair operation. **b.** Visually check underneath vehicle for evidence of fluid leakage.	**a.** Any damage that will prevent operation. **b.** Any brake fluid leak; class III leak of oil, fuel, or coolant.
7.1	Before	Power Steering Reservoir 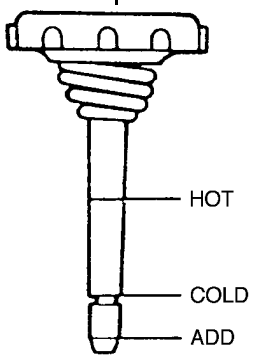 	DRIVER **CAUTION** • Do not permit dirt, dust, or grit to enter power steering reservoir. Damage to power steering system will result if power steering fluid becomes contaminated. • Do not overfill power steering reservoir. Damage to power steering system will result.	

Table 2-2. Preventive Maintenance Checks and Services (Cont'd)

Item No.	Interval	Location Item to Check/ Service	Crewmember Procedure	Not Fully Mission Capable If:
7.1	Before	Power Steering Reservoir (Cont'd)	Check fluid in power steering reservoir. Fluid should be between "HOT" and "COLD" marks. Add fluid if level is below "COLD" mark. DRIVER	
8	Before	Cooling System	**WARNING** If engine has been recently operated, do not remove radiator cap to check coolant level. Cooling system is under pressure, and escaping steam or coolant can cause burns. **CAUTION** Overheating, caused by lack of coolant, will cause engine damage. Check coolant level in coolant tank. Level should be at or above the "FULL COLD" line Add coolant if below the "FULL" line. DRIVER	
9	Before	Seat and Seatbelts	**NOTE** Vehicle operation with inoperative seatbelts may violate AR 385-55. **a.** Check all seatbelts for security, damage, and operation of buckle and clasp ends. **b.** Check operation of seat adjusting mechanism (driver's seat only).	**b.** Seat adjustment lock broken or missing.

Table 2-2. Preventive Maintenance Checks and Services (Cont'd)

Item No.	Interval	Location: Item to Check/ Service	Crewmember Procedure	Not Fully Mission Capable If:
10	Before	Fire Extinguisher	DRIVER **a.** Check for missing or damaged fire extinguisher. **b.** Check gauge for proper pressure of about 150 psi (1034 kPa). **c.** Check for damaged or missing seal. 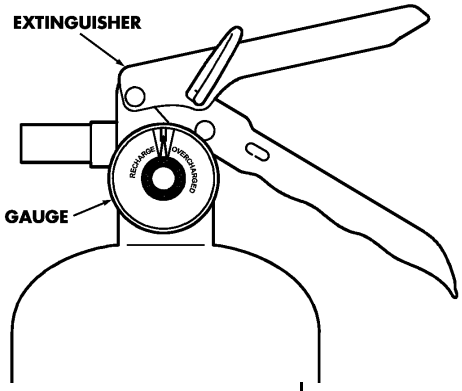	**a.** Fire extinguisher missing or damaged. **b.** Pressure gauge needle in recharge area. **c.** Seal broken or missing.
11	Deleted			

Table 2-2. Preventive Maintenance Checks and Services (Cont'd)

Item No.	Interval	Location Item to Check/ Service	Crewmember Procedure	Not Fully Mission Capable if:
			DRIVER	
12	Before	Instrument Panel	**WARNING** If gauges, instruments, or instrument lights are inoperable or not within ranges described in these checks, immediately shut off engine and notify supervisor or unit maintenance personnel. Continued operation of vehicle may result in injury or damage to equipment. **NOTE** If engine is warm, wait-to-start light may not come on. During cranking or after starting, light may go on and off a few times. **a.** Check wait-to-start light and brake warning light. Turn rotary switch to "RUN". Wait-to-start and brake warning light should come on.	**a**. Wait-to-start light does not come on when engine is cold or wait light stays on continually. Brake warning light does not come on.

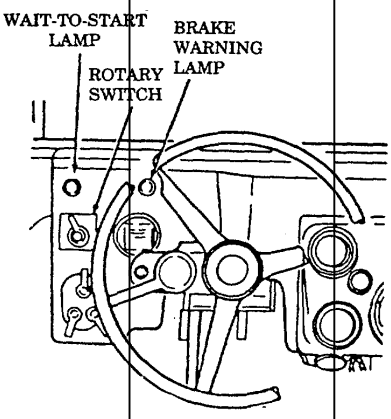

Table 2-2. Preventive Maintenance Checks and Services (Cont'd)

Item No.	Interval	Location: Item to Check/ Service	Crewmember Procedure	Not Fully Mission Capable If:
12	Before	Instrument Panel (Cont'd)	**b.** Start engine and check the following:	**b.** Engine will not start.
			c. Engine oil pressure gauge.	**c.** Oil pressure is less than 6 psi (103 kPa) at idle.
			d. Voltmeter.	**d.** Voltmeter needle stays in yellow or red range.
			e. Air restriction gauge.	**e.** Air restriction indicator reaches red zone.
			f. Brake warning light should go off when hand brake is released.	**f.** Brake warning light stays on after hand brake is released or comes on while driving.
			g. Check fuel gauge.	
			h. Check coolant temperature gauge.	**h.** Coolant temperature gauge inoperative or reads greater than 230°F (110°C).
13	Deleted			

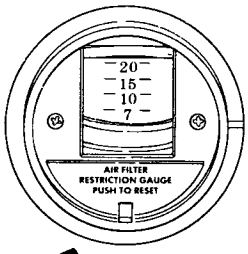

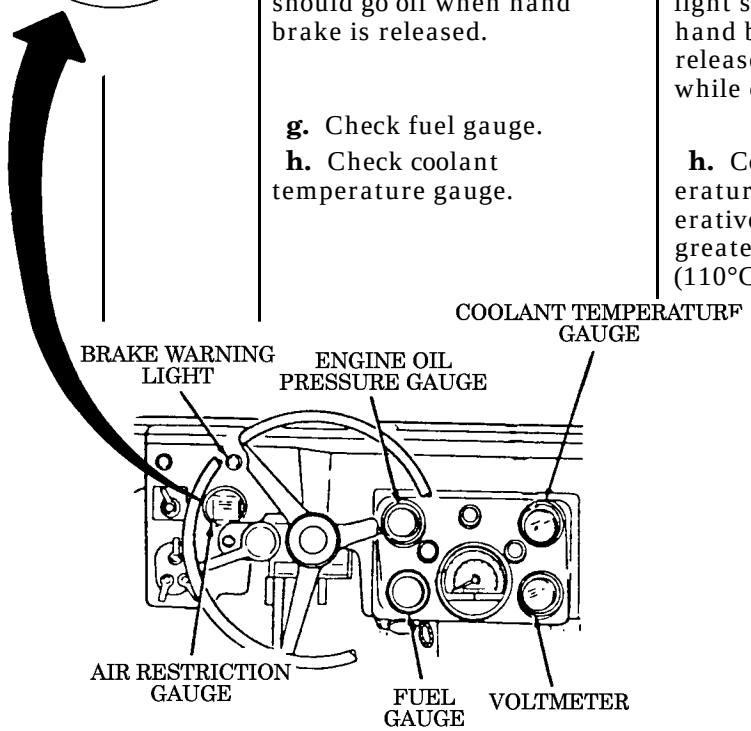

Table 2-2. Preventive Maintenance Checks and Services (Cont'd)

Item No.	Interval	Location Item to Check/ Service	Crewmember Procedure	Not Fully Mission Capable If:
14	Before	Brakes	DRIVER **NOTE** Engine must be warmed up and idling, transmission in "D" (drive), transfer in "H" (high), and parking brake released to perform the following check.	
			a. Check brake pedal travel. With vehicle at idle, transfer in 2H, and transmission in D, allow vehicle to move forward. As vehicle moves, slowly depress brake pedal. Pedal should travel 1 to 1-1/2 inches before brakes take hold. After brakes take hold, pedal may exceed the 1 to 1-1/2 inch travel. This is normal.	**a.** Brakes will not stop the vehicle.
			b. Check parking brake. With parking brake fully applied, transmission in D or R, and transfer in H, vehicle should not move.	**b.** Parking brake inoperable or unable to hold vehicle.
			c. Check parking brake lever safety mechanism to ensure that it latches when parking brake is applied.	**c.** Parking brake lever safety mechanism is not functioning properly.

Table 2-2. Preventive Maintenance Checks and Services (Cont'd)

Item No.	Interval	Location Item to Check/ Service	Crewmember Procedure	Not Fully Mission Capable If:
15	Before	NBC System	DRIVER (M996, M996A1, M997, M997A1, and M997A2 only) **a.** Check NBC system power switch for proper operation and security of mounting. All system fuses, including spares, should be present. **b.** Check NBC heater for proper operation. When knob is turned clockwise, the light should come on, indicating heater is working. **c.** Check for steady flow of air at hose outlets. If light does not come on, notify supervisor, and record on DA Form 2404.	
16	Before	Weapon Station	DRIVER (TOW and armament carriers, M966, M966A1, M1036, M1045, M1045A1, M1045A2, M1046, M1046A1, M1025, M1025A1, M1025A2, M1026, M1026A1, M1043, M1043A1, M1043A2, M1044, M1044A1, and M1121 only) **NOTE** Weapon station binding should be checked with weapon system or equivalent weight applied to turret. Refer to appropriate system TM to determine weight of weapon system. **a.** Check weapon station for binding by rotating 360 degrees in both directions at least five times.	**a.** Weapon station binds.

Table 2-2. Preventive Maintenance Checks and Services (Cont'd)

Item No.	Interval	Location: Item to Check/ Service	Crewmember Procedure	Not Fully Mission Capable If:
16	Before	Weapon Station (Cont'd)	**b.** (Armament carriers only). Check armament mounting plate and bearing sleeve for security of mounting and obvious damage that would impair operation.	b. Armament weapons required for mission: Mounting plate or bearing sleeve missing or any damage that will prevent or impair mounting of armament weapons.
			c. (TOW vehicles only). Check inclinometer for proper operation. Check level vial for breaks and/or bubbles.	**c.** Level vial is broken or no bubble is present.
			DRIVER	
17	During	Controls and Indicators	**a.** Monitor all gauges.	**a.** Engine oil pressure gauge reads less than approximately 40 psi (276 kPa) under normal driving conditions or less than 6 psi (41 kPa) at idle. Coolant temperature gauge reads greater than 230°F (110°C). Air restriction gauge indicates restriction in the air cleaner. Voltmeter indicates a loss of voltage.
			b. Check speedometer operation.	
			DRIVER	
18	During	Brakes	Check brakes for pulling or grabbing.	Brakes pull or grab.
			DRIVER	
19	During	Steering	Be alert for excessive sway, leaning to one side, or unstable handling. Check steering response for unusual free play, binding, or shimmy.	Handling is unstable; turning is difficult or free play, binding, or shimming detected.
			DRIVER	
19.1	During	Accelerator Pedal	Check response to accelerator feed. Check for sticking or binding pedal.	Pedal sticking or binding.

Table 2-2. Preventive Maintenance Checks and Services (Cont'd)

Item No.	Interval	Location Item to Check/ Service	Crewmember Procedure	Not Fully Mission Capable If:
20	During	Power-train	DRIVER Be alert for unusual noises or vibrations from engine, transmission, transfer, differentials, propeller shafts, axle shafts, or wheels.	Unusual noise or vibration detected.
21	During	Trans-mission	DRIVER Check transmission for proper operation.	Transmission slips or will not shift.
22	During	Ambulance Air-conditioner (M997, M997A1, and M997A2 only)	DRIVER **NOTE** Perform the following inspection only if the air conditioner is required for climatic conditions. Turn air conditioner on and set blower to maximum cooling speed settings. Wait 5 minutes to allow temperature to stabilize. Check outlet ducts for cool air.	Climatic conditions require air-conditioning and A/C is inoperable, and if outlet duct air is not cooler than ambient temperature.
22.1	After	Gear Shifter Lever	DRIVER **a.** Check transmission shift lever operation. Shift transmission through all operating ranges. Lever should move freely through all range positions. **b.** Check transfer shift lever operation. With transmission in "N," shift transfer lever through all range positions. Lever should move freely through all range positions.	**a.** Lever inoperable or binds between range detents. **b.** Lever inoperable or does not engage in all ranges with engine not running.

Table 2-2. Preventive Maintenance Checks and Services (Cont'd)

Item No.	Interval	Location Item to Check/ Service	Crewmember Procedure	Not Fully Mission Capable if:
23	After	Trans-mission fluid	**DRIVER** **CAUTION** • Do not permit dirt, dust, or grit to enter trans-mission oil dipstick tube. Internal trans-mission damage will result if transmission oil becomes contaminated. • Do not overfill trans-mission. Damage to transmission will result. An over-full transmission can also indicate a transfer case fluid leak. Notify unit maintenance if trans-mission fluid is above crosshatch mark. **NOTE** • Transmission fluid level should be checked with engine running, parking brake set, transmission shift lever in "N," and vehicle on level ground. Fluid level should be at crosshatch marks on dipstick. • Engine operating temp-erature of 190-230°F (88-110°C) must be reached before performing AFTER checks. Check transmission fluid level. If level is below the crosshatch marks, add sufficient fluid to bring the level to the crosshatch marks.	

Table 2-2. Preventive Maintenance Checks and Services (Cont'd)

Item No.	Interval	Location: Item to Check/ Service	Crewmember Procedure	Not Fully Mission Capable If:
24	After	Fuel Filter	DRIVER **WARNING** Do not perform fuel system checks, inspections, or maintenance while smoking or near fire, flames, or sparks. Fuel may ignite, causing damage to vehicle and injury or death to personnel. **NOTE** A rubber hose can be attached to drainvalve to catch fuel in container before opening drain valve. If fuel is clear, put fuel back in fuel tank. **a.** Check fuel for contamination. With engine running, open drainvalve. Allow fuel to drain in suitable container until it runs clear. Close valve. **NOTE** Fuel retained in the drainvalve may drip when vehicle vibrations occur. This is normal and does not constitute a leak. Wipe drainvalve with rag until excess fuel is removed. **b.** Check for leaks. **c.** Stop engine and remove rubber hose from drainvalve, if installed.	**a.** Fuel is not clear after draining 1 pint (0.47 L). **b.** Class III leakage evident.

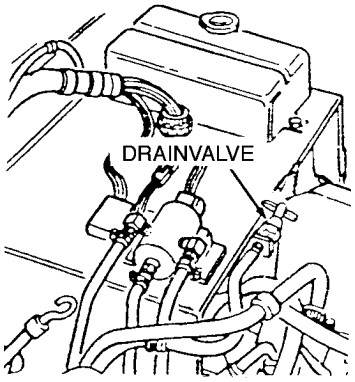

Table 2-2. Preventive Maintenance Checks and Services (Cont'd)

Item No.	Interval	Location Item to Check/ Service	Crewmember Procedure	Not Fully Mission Capable if:
			DRIVER	
25	After	Left Side Tires	**WARNING** Operating a vehicle with a tire in an underinflated condition or with questionable defect may lead to premature tire failure and may cause equipment damage and injury or death to personnel. Visually check tires for under-inflation, cuts, gouges, cracks, or bulges. Remove all penetrating objects.	Tire deflated or otherwise unser-viceable.
			DRIVER	
26	After	Mirror (Left Side)	**NOTE** Vehicle operation with damaged or missing outside rearview mirrors may violate AR 385-55. Check mirror for presence, cracks, and serviceability.	
			DRIVER	
27	After	Left Front, Side Exterior	**NOTE** If leakage is detected, further investigation is needed to determine the location and cause of the leak. a. Visually check underneath vehicle for evidence of fluid leakage.	a. Any brake fluid leak; Class III leak of oil, fuel, or coolant.

Table 2-2. Preventive Maintenance Checks and Services (Cont'd)

Item No.	Interval	Location Item to Check/ Service	Crewmember Procedure	Not Fully Mission Capable If:
27	After	Left Front, Side Exterior (Cont'd)	**b.** Visually check halfshaft cv boots and ball joint boots for presence, rips, tears, or cuts.	
			c. Inspect frame crossmembers and underbody support for missing hardware, cracks, bends, and breaks. Notify unit maintenance if rust is present, but the base metal is sound.	**c.** Crossmembers or underbody support are missing any hardware, broken, cracked, or if a bent or rusted-through condition is present that would affect vehicle operation.
			d. Visually check for body damage that would impair operation of vehicle.	**d.** Any damage that will prevent operation.
28	After	Rear Exterior	DRIVER **NOTE** If leakage is detected, further investigation is needed to determine the location and cause of the leak.	
			a. Visually check underneath vehicle for evidence of fluid leakage.	**a.** Any brake fluid leak; class III leak of oil, fuel, or coolant.
			b. Visually check halfshaft cv boots and ball joint boots for presence, rips, tears, or cuts.	
			c. Inspect frame crossmembers and underbody support for missing hardware, cracks, bends, and breaks. Notify unit maintenance if rust is present, but the base metal is sound.	**c.** Crossmembers or underbody support are missing any hardware, broken, cracked, or if a bent or rusted-through condition is present that would affect vehicle operation.
			d. Inspect bumper or crossmember and inner braces in area around towing pintle for cracks or breaks.	**d.** Bumper, crossmember or an inner brace is cracked or broken.

Table 2-2. Preventive Maintenance Checks and Services (Cont'd)

Item No.	Interval	Location Item to Check/ Service	Crewmember Procedure	Not Fully Mission Capable if:
			DRIVER (M996, M996A1, M997, M997A1, and M997A2 only)	
29	After	Patient Compart-ment	a. Check presence and operation of ceiling white lights, blackout lights, and spotlights.	a. One or more lights inoperative or unserviceable.
			b. Check operation of blackout switches at rear step, rear doors, and bulk-head door.	b. Any blackout switch inoperable.
			c. Inspect condition and security of litter racks and components.	
			d. Inspect upper litter rack hinges and latches for proper operation, damage, or missing components.	d. Hinges or latches inoperative, dam-aged, or missing.
			e. Inspect tension straps, sup-port straps, litter straps, and footman loops for security of mounting, damage, and missing components.	
			f. Inspect oxygen bottles and mounting components for security of stowage when oxygen bottles are in stowed position.	
			g. Inspect IV straps and hangers for security of mounting, damage, and missing components.	

Table 2-2. Preventive Maintenance Checks and Services (Cont'd)

Item No.	Interval	Location Item to Check/ Service	Crewmember Procedure	Not Fully Mission Capable if:
29	After	Patient Compart-ment (Cont'd)	h. Check operation of rear doors, handles, and latching mechanisms. Check for loose or missing compo-nents. Door should not bind and should close securely when latched shut.	h. Rear door han-dles and latching mechanisms do not operate properly. Missing or damaged components. Rear doors do not operate properly.
			i. Inspect rear door seals, step seals, bulkhead door and rear door vent seals (M996 and M996A1 only) for proper installation and condition. Door seals must not allow emission of light signature under blackout conditions.	i. Door seals allow emission of light signature under blackout conditions (detectable from 50 ft [15 ml of vehicle).
			DRIVER	
30	After	Right Side Tires	**WARNING** Operating a vehicle with a tire in an underinflated condition or with questionable defect may lead to premature tire failure and may cause equipment damage and injury or death to personnel.	
			Visually check tires for under-inflation, cuts, gouges, cracks, or bulges. Remove all penetrating objects.	Tire deflated, or otherwise unserviceable.
			DRIVER	
31	After	Mirror (Right Side)	**NOTE** Vehicle operation with damaged or missing outside rearview mirrors may violate AR 385-55. Check mirror for presence, cracks, and serviceability.	

Table 2-2. Preventive Maintenance Checks and Services (Cont'd)

Item No.	Interval	Location: Item to Check/ Service	Crewmember Procedure	Not Fully Mission Capable If:
32	After	Right Front, Side Exterior	DRIVER **NOTE** If leakage is detected, further investigation is needed to determine the location and cause of the leak.	
			a. Visually check underneath vehicle for evidence of fluid leakage.	**a.** Any brake fluid leak; class III leak of oil, fuel, or coolant.
			b. Visually check halfshaft cv boots and ball joint boots for presence of rips, tears, cuts.	
			c. Inspect frame crossmembers and underbody support for missing hardware, cracks, bends, and breaks. Notify unit maintenance if rust is present but the base metal is sound.	**c.** Crossmembers or underbody support are missing any hardware, broken, cracked, or if a bent or rusted-through condition is present that would affect vehicle operation.
			d. Visually check front and right side of vehicle for obvious damage that would impair operation.	**d.** Any damage that will prevent operation.
33	After	Engine Oil	DRIVER **CAUTION** • Do not permit dirt, dust, or grit to enter engine oil dipstick tube. Internal engine damage will result if engine oil becomes contaminated. • Do not overfill engine crankcase. Damage to engine will result.	

Table 2-2. Preventive Maintenance Checks and Services (Cont'd)

Item No.	Interval	Location Item to Check/ Service	Crewmember Procedure	Not Fully Mission Capable If:
33	After 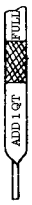	Engine Oil (Cont'd)	Check engine oil level. Level should be between "ADD" and "FULL." If level is below "ADD," add oil to bring level between the "ADD" and "FULL" marks.	Oil appears milky.
34	After	Power Steering Lines and Fittings	DRIVER **WARNING** Notify unit maintenance if power steering system has class III leak. Loss of power assist could occur if this condition exists. Check power steering lines and fittings for leaks.	Class III leakage evident.
35	Deleted			

Table 2-2. Preventive Maintenance Checks and Services (Cont'd)

Item No.	Interval	Location: Item to Check/ Service	Crewmember Procedure	Not Fully Mission Capable If:
36	After	Cooling System	DRIVER Inspect radiator hoses for leakage.	Class III leakage evident.
37	After	Master Cylinder	DRIVER Visually check master cylinder lines for leaks and security of cover.	Any leak or cover missing.
37.1	After	Windshield Washer Jar	DRIVER **a.** Visually check windshield washer jar for damage. **b.** Check windshield washer fluid level.	
38	After	Lights	DRIVER **CAUTION** Never set the rotary switch to "RUN" to check the lights. This drains the batteries and can burn out the glow plugs and control box. **NOTE** Vehicle operation with damaged or inoperable headlights may violate AR 385-55. **a.** Check for presence and operation of service drive, turn signal, blackout marker, marker, blackout drive, and side marker lights. **b.** Check operation of tail/stop-lights. Push down brake pedal approximately 1/4 in. Tail/stop-lights should come on.	

Table 2-2. Preventive Maintenance Checks and Services (Cont'd)

Item No.	Interval	Location Item to Check/ Service	Crewmember Procedure	Not Fully Mission Capable If:
39	After	Horn	DRIVER **NOTE** Vehicle operation with inoperative horn may violate AR 385-55. Check operation of horn if tactical situation permits.	
40	After	Wind-shield and Wipers	DRIVER **NOTE** Vehicle operation with damaged windshield may violate AR 385-55. **a.** Check windshield for damage that would impair operator's vision. **NOTE** Vehicle operation with inoperative wipers may violate AR 385-55. **b.** Check windshield wiper and blade for presence and damage. **c.** Check windshield wipers and washer for proper operation.	**a.** Windshield is cracked, broken, or discolored (cloudy) sufficiently to impair operator's vision.
41	After	Light Switches	DRIVER **NOTE** Ensure all switches are in the "OFF" position. Failure to turn switches to the "OFF" position when not in use will drain the batteries. Check and ensure all switches are in the "OFF" position.	

Table 2-2. Preventive Maintenance Checks and Services (Cont'd)

Item No.	Interval	Location Item to Check/ Service	Crewmember Procedure	Not Fully Mission Capable If:
41.1	Weekly	Hand Throttle	DRIVER **a.** Check hand throttle and mounting bracket for security. Check throttle release button to ensure hand throttle cable operates properly. **b.** Check hand throttle cable for corrosion, nicks, breaks, or burns.	
42	Weekly	Tires	DRIVER **WARNING** • Do not exceed 30 psi (207 kPa) cold bias tire inflation pressure. Overinflation of tire may result in premature tire failure, damage to equipment, and injury or death to personnel. • Do not exceed 50 psi (345 kPa) cold radial tire inflation pressure. Overinflation of tire may result in damage to equipment and injury or death to personnel. Perform steps a, b, c, and d for bias tires and steps a, b, c, and e for radial tires. **NOTE** Check tire size designator on sidewall for tire construction identification: 36x12.50-16.5 LT-Bias ply, 37x12.50R 16.5 LT-Radial.	

Table 2-2. Preventive Maintenance Checks and Services (Cont'd)

Item No.	Interval	Location Item to Check/ Service	Crewmember Procedure	Not Fully Mission Capable if:
42	Weekly	Tires (Cont'd)	a. Check tire tread depth. Tread should not be worn beyond level of wear bar. Wear bars are molded across the tread pattern in the valley between the center rib and lugs. The tread wear indicator letters (TWI) are molded on the sidewall to aid in locating the wear bar. **NOTE** The wear bars are not evident on new or very low mileage tires. The wear bars will appear after usual use. 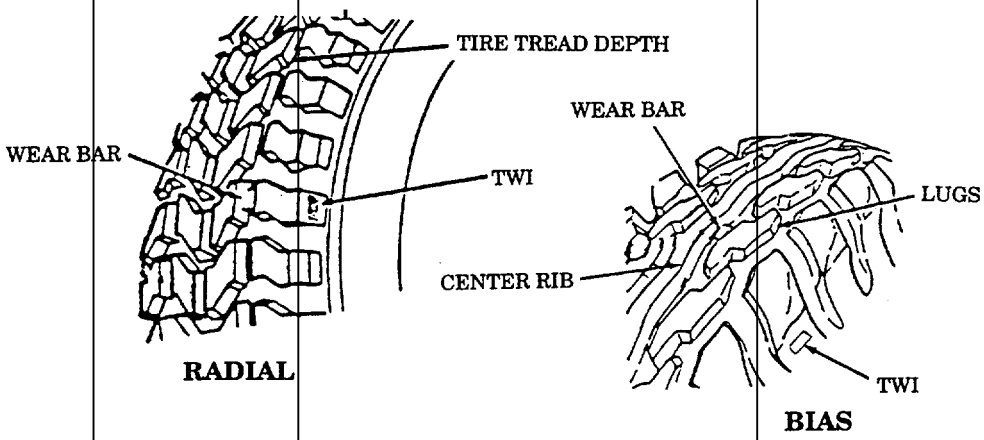 	a. Tread is worn even to height of tread wear indicator. Any cut, gouge, or crack that extends to the cord body or any bulges.

Table 2-2. Preventive Maintenance Checks and Services (Cont'd)

Item No.	Interval	Location Item to Check/ Service	Crewmember Procedure	Not Fully Mission Capable if:
42	Weekly	Tires (Cont'd)	b. Measure tread thickness. Tread depth should not be less than 1/16-inch (1.59-mm) thick. (1.59-mm). c. Check for missing or loose wheel stud nuts and lug nuts. Tighten loose lug nuts and have unit maintenance tighten stud nuts and lug nuts to proper torque. 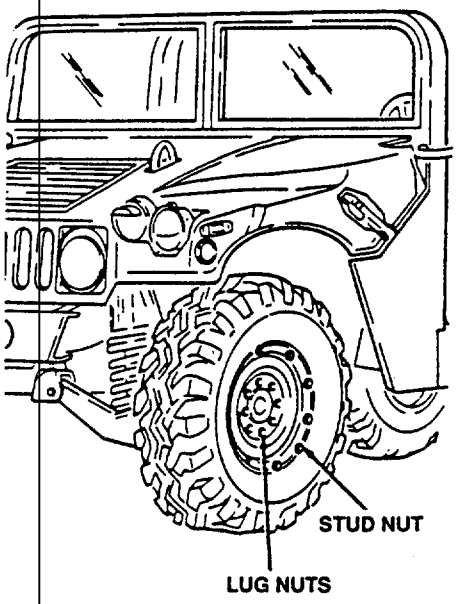 	b. Tread depth less than 1/16-inch c. Any wheel stud nut or lug nut is broken or missing.

Table 2-2. Preventive Maintenance Checks and Services (Cont'd)

Item No.	Interval	Location: Item to Check/ Service	Crewmember Procedure	Not Fully Mission Capable If:
42	Weekly	Tires (Cont'd)	(BIAS TIRES ONLY) **WARNING** Do not exceed 30 psi (207 kPa) cold bias tire inflation pressure. Over-inflation of tire may result in premature tire failure, damage to equipment, and injury or death to personnel. Check tire size designator on sidewall for tire construction identification: 36x12.50-16.5 LT-Bias ply. **d.** Gauge tires for correct air pressure using tire inflation gauge. Adjust as necessary.	

VEHICLE	FRONT		REAR	
	Standard	Metric	Standard	Metric
AT GVW	(psi)	(kPa)	(psi)	(kPa)
M966, M998, M1025, M1026, M1035, M1036, M1038, M1043, M1044, M1045, M1046, M1121	20	138	22	152
M996, M997, M1037, M1042	20	138	30	207
UNLOADED* M998, M1038 (only)	16	110	18	124
MUD, SAND, AND SNOW (30 mph [48 kph] max. speed) All models	12	83	16	110
CROSS COUNTRY M998 series (except M1097)	15	103	20	138

*Driver plus one passenger

Table 2-2. Preventive Maintenance Checks and Services (Cont'd)

Item No.	Interval	Location: Item to Check/ Service	Crewmember Procedure	Not Fully Mission Capable If:
42	Weekly	Tires (Cont'd)	(RADIAL TIRES ONLY) **WARNING** Do not exceed 50 psi (345 kPa) cold radial tire inflation pressure. Over-inflation of tire may result in premature tire failure, damage to equipment, and injury or death to personnel. Check tire size designator on sidewall for tire construction identification: 37x12.50R-16.5 LT-Radial. **e.** Gauge tires for correct air pressure using tire inflation gauge. Adjust as necessary.	

VEHICLE	FRONT		REAR	
	Standard	Metric	Standard	Metric
AT GVW	(psi)	(kPa)	(psi)	(kPa)
M966, M966A1, M998, M998A1, M1025, M1025A1, M1026, M1026A1, M1035, M1035A1, M1036, M1038, M1038A1, M1043, M1043A1, M1043A2, M1044, M1044A1, M1045, M1045A1, M1046, M1046A1, M1121	20	138	25	172
M996, M996A1, M997, M997A1, M997A2, M1037, M1042	20	138	30	207
M1025A2, M1035A2, M1045A2,	25	172	40	276
M997A2, M1043A2, M1097A1, M1097A2, M1123	35	241	40	276
M1097	36	248	42	290
UNLOADED* All models	15	103	18	124
MUD, SAND, AND SNOW (15 mph [48 kph] max. speed) All models	12	83	20	138

*Driver plus one passenger

Table 2-2. Preventive Maintenance Checks and Services (Cont'd)

Item No.	Interval	Location / Item to Check/ Service	Crewmember Procedure	Not Fully Mission Capable If:
42	Weekly	Tires (Contd)		

VEHICLE	FRONT		REAR	
	Standard	Metric	Standard	Metric
AT GVW	(psi)	(kPa)	(psi)	(kPa)
CROSS COUNTRY M998 and M998A1 series (except M1097 and M1097A1)	15	103	20	138
M998A2 series, M1097, and M1097A1	20	138	30	207

43	Weekly	Exhaust System	DRIVER Check exhaust system for security of all mounts, tightness of clamps and bolts, rusted conditions, damaged pipes, and any indication of an exhaust leak.	Any mounts are broken, pipes are rusted through or broken, and any indication of an exhaust leak.
44	Weekly	Shock Absorbers	DRIVER Visually inspect shock absorbers for leaks, damage, and security of mounting.	Class III leakage or damage is evident; mounting damaged or loose.
45	Weekly	Doors and Windows	DRIVER Check operation of doors and windows.	
46	Weekly	Tailgate	DRIVER Check operation of tailgate. Check that tailgate latches securely and operates properly.	

Table 2-2. Preventive Maintenance Checks and Services (Cont'd)

Item No.	Interval	Location Item to Check/ Service	Crewmember Procedure	Not Fully Mission Capable If:
47	Weekly	Armament Carriers	DRIVER (TOW and armament carriers M966, M966A1, M1036, M1045, M1045A1, M1045A2, M1046, M1046A1, M1025, M1025A1, M1025A2, M1026, M1026A1, M1043, M1043A1, M1043A2, M1044, M1044A1, and M1121 only) **a.** Inspect cargo shell door for bends, warping, binding, and ease of operation. Inspect latching mechanisms for proper operation. Inspect lift cylinders for bends and security of mounting. **b.** Inspect strap assembly for frays and security of mounting. **c.** Check cargo shell door for alignment as follows: (1) Insert a piece of paper between the door seal and door opening. (2) With door closed, seal should offer resistance to pulling out paper. If door seal does not offer resistance, adjustment is required.	**a.** Lift cylinders or latches bent, warped, binding, or inoperative.

Table 2-2. Preventive Maintenance Checks and Services (Cont'd)

Item No.	Interval	Location Item to Check/ Service	Crewmember Procedure	Not Fully Mission Capable If:
48	Weekly	Patient Compart-ment	DRIVER (M996, M996A1, M997, M997A1, and M997A2 only) **WARNING** Be sure cables are securely connected to the steps before using. Failure to do so may cause injury to personnel. **a.** Inspect step assembly. **b.** Check operation of step latch. Latch should securely engage step striker to secure step assembly in the stowed position. **c.** Check operation of attend-ant seat and rail. Inspect seat and rail for damage, missing components, and binding during operation. Ensure proper adjustment and operation of seatbelt. **d.** Check operation of am-bulatory patient seat (M996 and M996A1 only). Check for damage or missing components. **e.** Inspect handhold straps and footman loops for secur-ity, damage, or missing compo-nents (M996 and M996A1 only).	**c.** Seatbelt, atten-dant seat, or rail is broken or missing.

Table 2-2. Preventive Maintenance Checks and Services (Cont'd)

Item No.	Interval	Location Item to Check/ Service	Crewmember Procedure	Not Fully Mission Capable If:
49	Weekly	Front Arctic Heater and/or Rear Troop/ Cargo Heater	DRIVER (Vehicle w/Arctic Winterization Kit and/or Troop/Cargo Winterization Kit) **a.** Check heater and heater controls for proper operation. **b.** Check fuel lines and fittings for leaks, cracks, or breaks. **c.** Check electrical cables and connections for security, or frayed or broken wires. **d.** Check heater exhaust pipe for damage, security of mounting, and missing components. **e.** Check fuel filter for leaks or damage.	**a.** Heater inoperable and mission requires heater. **b.** Class III fuel leakage is evident and mission requires heater. **c.** Frayed or broken wires. **d.** Heater exhaust damaged or components missing. **e.** Class III leak evident.
50	Weekly	Crew Door	DRIVER (M966, M966A1, M996, M996A1, M997, M997A1, M997A2, M1025, M1025A1, M1025A2, M1026, M1026A1, M1036, and M1121 only) **a.** Check crew door assembly for visible cracks that would make door unserviceable or unable to secure properly. **b.** Check crew door assembly latch, hinges, and door handle for damage, looseness, or missing parts.	**a.** Visible cracks, or door does not secure properly. **b.** Loose, missing, or unserviceable parts.

Table 2-2. Preventive Maintenance Checks and Services (Cont'd)

Item No.	Interval	Location Item to Check/ Service	Crewmember Procedure	Not Fully Mission Capable If:
51	Weekly	Air Cleaner	DRIVER **WARNING** If NBC exposure is suspected, all air filter media should be handled by personnel wearing protective equipment. Consult your unit NBC Officer or NBC NCO for appropriate handling or disposal instructions. Check air cleaner weathercap, air cleaner assembly, air intake hose, and air horn for security of mounting and damage.	Evidence of damage to air cleaner weathercap, body, air intake hose, or mounting that will allow unfiltered air to enter the engine.
52	Weekly	Alternator Brackets	DRIVER Visually check power steering and alternator brackets for cracks, damage, or loose bolts.	Damaged or cracked bracket, or loose bolts.
53	Weekly	Cooling System	DRIVER **a.** Check fan and fan pulley for damage. **b.** Check radiator for leaks, clogged or damaged fins, and loose or damaged hoses to and from the engine.	**a.** Fan blade or pulley is bent, broken, cracked, or loose. **b.** Class III leakage evident.

Table 2-2. Preventive Maintenance Checks and Services (Cont'd)

Item No.	Interval	Location Item to Check/ Service	Crewmember Procedure	Not Fully Mission Capable If:
53	Weekly	Cooling System (Cont'd)	**c.** Check support mounts, side brackets, and side bracket weldments on radiator for missing hardware, damage, or broken welds. 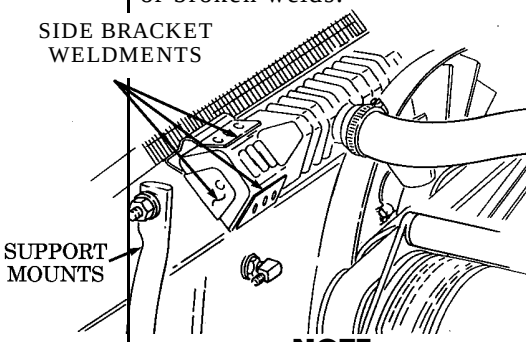 **NOTE** Belt flutter at idle is normal in the HMMWV belt drive system. It does not necessarily indicate that the belts are loose. Belt flutter should disappear as the engine is accelerated.	**c.** Support mounts broken, damaged, or missing hardware. Side brackets damaged or weldments broken.
			d. Check for loose, missing, broken, cracked, or frayed drivebelts (all models except "A2" and M1123 vehicles). Notify supervisor if loose drivebelts are suspected.	**d.** Any drivebelt is missing, broken, frayed or dry rotted. Belt fiber has more than one crack 1/8-in. (3.18 mm) in depth or 50% or frays more than 2 in. (5.1 cm) long.
			e. For A2 and M1123 models, check for looseness, misalignment, breaks, splits, or frayed serpentine belt.	**e.** Serpentine drivebelt is loose, misaligned (off one or more grooves on any pulley), breaks or splits in outer surface, frays on either edge if cord is broken.
			f. Check fan shroud for damage.	**f.** Fan shroud broken, cracked, or loose.
			g. Check engine oil cooler and hoses for damage and leaks.	**g.** Class III leak evident.

Table 2-2. Preventive Maintenance Checks and Services (Cont'd)

Item No.	Interval	Location / Item to Check/ Service	Crewmember Procedure	Not Fully Mission Capable If:
54	Weekly	Batteries	DRIVER **WARNING** • Don't smoke, have open flames, or make sparks around batteries, especially if the caps are off. Batteries can explode and cause injury or death. • Remove all jewelry such as rings, dog tags, bracelets, etc. If jewelry contacts battery terminal, a direct short will result, causing instant heating of tools, severe injury to personnel, or damage to equipment. **a.** Remove companion seat and check batteries for damaged casing, terminal posts, and security of mounting. Notify unit maintenance if any defects are found. **b.** Electrolyte should be filled to the level/split ring in the battery filler opening (vent). If fluid is low, fill with distilled water to split ring (refer to appendix D, item 27). If fluid is gassing (boiling), notify unit maintenance. **NOTE** Water in battery box can be caused by debris plugging battery box drain holes. If water is present, clean debris from battery box drain holes. **c.** Check battery box for corrosion or water on bottom of battery tray.	**a.** One or more batteries missing, unserviceable, leaking, terminal or cables are loose, corroded, or holddowns are not secure.

Table 2-2. Preventive Maintenance Checks and Services (Cont'd)

Item No.	Interval	Location Item to Check/ Service	Crewmember Procedure	Not Fully Mission Capable If:
55	Weekly	Weapon Station	DRIVER (M966, M966A1, M1036, M1045, M1045A1, M1045A2, M1046, M1046A1, M1025, M1025A1, M1025A2, M1026, M1026A1, M1043, M1043A1, M1043A2, M1044, M1044A1, and M1121 only) **a.** Inspect weapon station hatch and hinge for bends, cracks, warped, or damaged areas. **b.** Inspect brake handle for ease of operation. **c.** Inspect gunner's sling for tears or frays.	
56	Weekly	TOW Missile Rack	DRIVER (M966, M966A1, M1036, M1045, M1045A1, M1045A2, M1046, M1046A1, and M1121 only) **a.** Inspect TOW missile rack latch assembly and support braces for presence and ease of operation. **b.** Inspect straps for tears and frays. **c.** Check for presence of TOW adapter.	**a.** Rack will not support or stow six TOW missiles. **c.** TOW adapter missing or damaged.
57	Weekly	Gunner's Platform	DRIVER Inspect gunner's platform risers for binding, ease of operation, or missing lock-pins.	Gunner's platform cannot be adjusted.

Table 2-2. Preventive Maintenance Checks and Services (Cont'd)

Item No.	Interval	Location: Item to Check/ Service	Crewmember Procedure	Not Fully Mission Capable If:
58	Weekly	Tiedowns	DRIVER **a.** Inspect stored equipment footman loops for presence and security of mounting. Inspect straps for tears or frays. **b.** Inspect stowage brackets, footman loops, and tiedowns for security of mounting, damage, and missing components. **c.** Inspect all tiedown strap assemblies for proper operation, frays, damage, cleanliness, and security of mounting.	
59	Weekly	Bulkhead Doors	DRIVER (M996, M996A1, M997, M997A1, and M997A2 only) Check operation of bulkhead doors. Doors should securely latch when closed or fully opened. Inspect all door components for damage, adjustment, or missing components.	

Table 2-2. Preventive Maintenance Checks and Services (Cont'd)

Item No.	Interval	Location: Item to Check/ Service	Crewmember Procedure	Not Fully Mission Capable If:
60	Weekly	Environ-ment Control System	DRIVER **a.** Check security of A/C heater control box mounting. **b.** Check Heating, Ventilation and Air Conditioning (HVAC) filter (para. 3-27) for dirt or debris. Clean filters of dirt and debris that would restrict air flow. **NOTE** Insufficient cooling could be a result of loss of R12. This is a gas, therefore leaks cannot be detected. If lines or fittings are suspect, the vehicle is to be considered non-mission capable and sent to Direct Support for further inspection(s). **c.** Inspect exposed HVAC system ducts, hoses, fitting lines, vents, and mounting hardware for damage, leaks, missing components, and security of mounting. **d.** Inspect exposed wiring harnesses for breaks, frayed insulation, loose or damaged connectors, and loose, damaged, or missing mounting hardware.	**d.** Wiring harness broken, frayed, or damaged. Mounting hardware missing.

Table 2-2. Preventive Maintenance Checks and Services (Cont'd)

Item No.	Interval	Location Item to Check/ Service	Crewmember Procedure	Not Fully Mission Capable If:
61	Weekly	NBC System	DRIVER (M996, M996A1, M997, M997A1, and M997A2 only) **a.** Inspect exposed NBC equipment for security of mounting, damage, and missing components. **b.** Inspect NBC stowage compartment door seals, hinges, latches, and straps for proper operation, damage, and missing components. **c.** Inspect M13 patient protective mask, hoses, and end connectors for damage, leaks, or missing components. Inspect adapter for stripped threads or other damage.	

Table 2-2. Preventive Maintenance Checks and Services (Cont'd)

Item No.	Interval	Location Item to Check/ Service	Crewmember Procedure	Not Fully Mission Capable If:
62	Weekly	Canvas and Bows	DRIVER (M998, M998A1, M1038, and M1038A1 w/Soft Top Enclosure) **a.** Inspect cargo cover for tears, punctures, and ripped seams. **b.** Inspect windows for cracks and scratches. **c.** Inspect bows and mounting brackets for damage and security of mounting. **d.** Inspect footman loops and straps for tears, frays, and security of mounting.	
63	Weekly	Tow Pintle	DRIVER Check pintle hook for looseness, damaged locking mechanism, and presence of cotter pin.	
64	Weekly	Tow Hooks	DRIVER Check presence and condition of tow hooks (front and rear).	
65	Weekly	Trailer Electrical Connector	DRIVER Check trailer electrical connector for damage.	
66	Weekly	Parking Brake	DRIVER Check combination service/ parking brake assemblies; inspect parking brake for obstruction of the actuating lever or broken or missing spring.	Actuating lever or spring is missing or broken.
67	Deleted			

Table 2-2. Preventive Maintenance Checks and Services (Cont'd)

Item No.	Interval	Location: Item to Check/ Service	Crewmember Procedure	Not Fully Mission Capable If:
68	Monthly	Corrosion	DRIVER Visually inspect vehicle for indication of corrosion or cracks and/or breaks.	Any corroded-through condition or cracks or breaks that would affect vehicle operation.
69	Monthly	Tailgate	DRIVER Check tailgate for corroded-through condition and/or damage. If tailgate does not latch securely or is damaged, notify unit maintenance.	Any corroded-through condition or damage that would affect vehicle operation.
70	Monthly	Red Cross Plate	DRIVER (M996, M996A1, M997, M997A1, and M997A2 only) **a.** Check cross marking latches and hinges for proper operation, security of mounting, damage, or missing components. **b.** Inspect stowage component door hinge, seal, and latch for proper operation, damage, or missing components.	
71	Monthly	Shelter Mount Kit	DRIVER (M1037, M1042, M1097, M1097A1, M1097A2, and M1123 only) Inspect shelter mounting bracket for security of mounting and loose or missing bolts.	Any mounting bolt missing.

Table 2-2. Preventive Maintenance Checks and Services (Cont'd)

Item No.	Interval	Location Item to Check/ Service	Crewmember Procedure	Not Fully Mission Capable If:
72	Monthly	Winch	DRIVER (Vehicles with winch) **a.** Check winch controls for proper operation. **b.** Check winch cable for kinks, frays, or breaks.	
73	Monthly	Troop Seats	DRIVER (M998, M998A1, M1038, and M1038A1 w/Troop Seats Kit) **a.** Inspect troop seats for missing or damaged lock-pins. **b.** Inspect troop seats and backrest for security of mounting.	**b.** Mission requires troop seats and troop seats are inoperative or damaged.

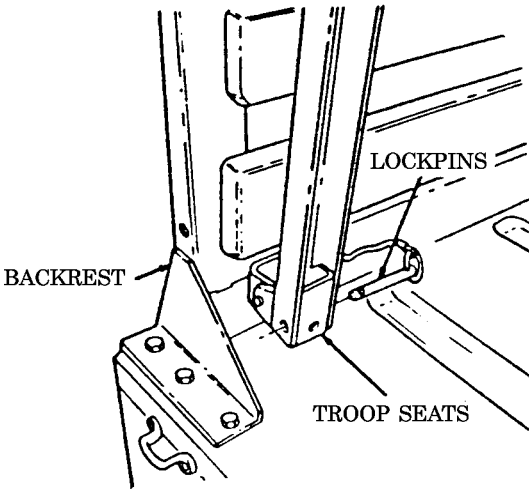

Table 2-2. Preventive Maintenance Checks and Services (Cont'd)

Item No.	Interval	Location: Item to Check/ Service	Crewmember Procedure	Not Fully Mission Capable If:
74	Monthly	TOW Power Cable	DRIVER (M966, M1036, M1045, M1046 - serial numbers 1 through 19,410) Inspect TOW power cable at the point where it exits the battery box. Chafing of the nylon braid that covers the cable is acceptable. If there is evidence that the wire inside is exposed, notify unit maintenance. the cable is acceptable. If there is evidence that the wire inside is exposed, notify unit maintenance.	

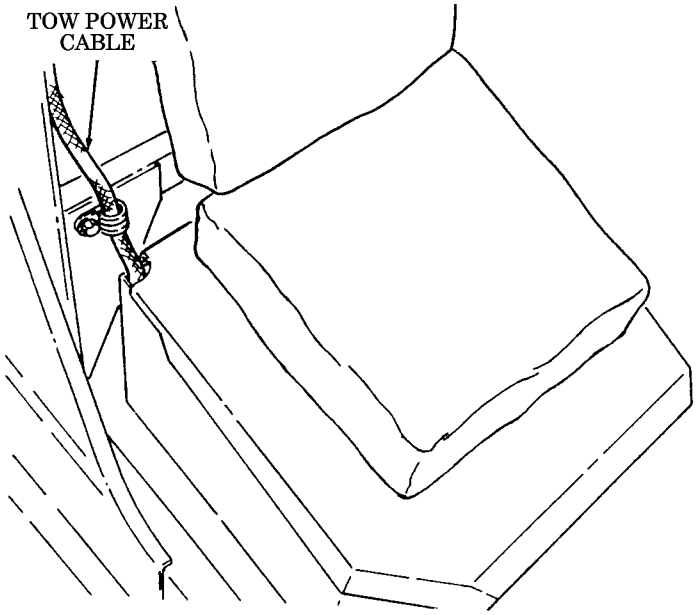

Table 2-2. Preventive Maintenance Checks and Services (Cont'd)

Item No.	Interval	Location: Item to Check/ Service	Crewmember Procedure	Not Fully Mission Capable If:
			DRIVER	
75	Monthly	Zippers	**a.** Check canvas top and door zippers for corrosion and/or damage. **b.** Apply interlock lubricant (zipperease) (refer to appendix D, item 29) to canvas top and door zippers.	
76	Monthly	Skid Plates	(Vehicles equipped with skid plate) **a.** Inspect skid plate and shield for bends, breaks, or cracks. **b.** Inspect shields for loose fasteners, or damaged or missing components. Tighten loose fasteners, or replace damaged or missing components.	

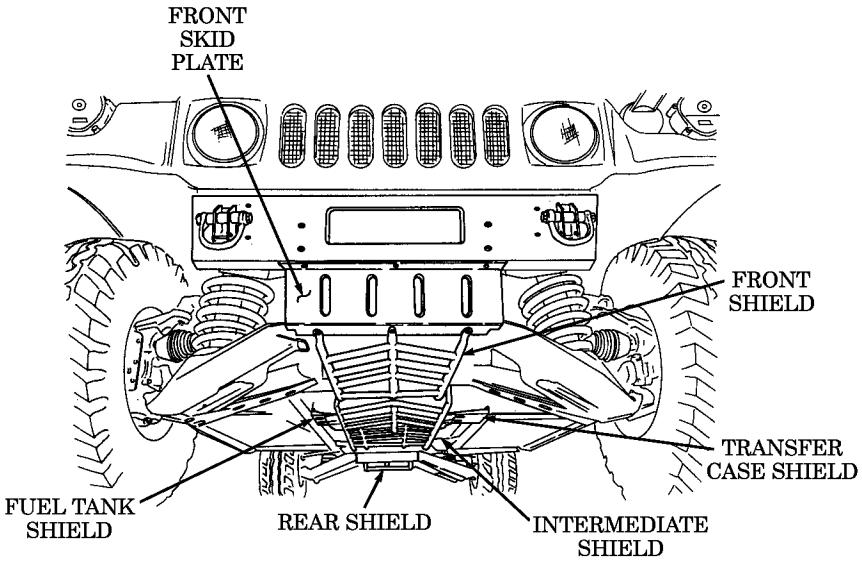

Section III. OPERATION UNDER USUAL CONDITIONS

2-8. GENERAL

This section provides instructions for vehicle operations under moderate temperature, humidity, and terrain conditions. For vehicle operation under unusual conditions, refer to section IV of this chapter.

NOTE

Before you operate your vehicle, be sure to perform the preventive maintenance checks and services shown in table 2-2.

2-9. BREAK-IN SERVICE

a. Perform all before operation checks and services as indicated in table 2-2.

b. Upon receipt of vehicle, or after engine replacement, the following break-in speeds and precautions should be observed during the first 500 miles (805 km) of operation:

- Do not exceed a speed of 55 miles per hour (89 kilometers per hour).
- Do not drive for long periods of time at constant speed.
- Avoid rapid acceleration or deceleration.
- Drive at a moderate speed until the engine is fully warmed up.
- No trailer towing.

2-10. STARTING THE ENGINE

WARNING

- The automatic transmissions on M998 and “A1” vehicles do not have a “PARK” position. Whenever the vehicle is parked, or the transmission in in “NEUTRAL”, the parking brake MUST BE APPLIED. Damage to equipment and injury to personnel may occur if these instructions are not followed.
- The automatic transmissions on the M1123 and“A2” vehicles have a “PARK” position. Never use the transmission shift lever in place of the parking brake. Set the parking brake. Make sure the transmission shift lever is in the “P” (park) position and transfer case shift lever is NOT in the “N” (neutral) position. Damage to equipment and injury to personnel may occur if these instructions are not followed.
- Chock blocks will be used when parking a vehicle with inoperative parking brakes, when operating in extreme cold conditions, when parking on inclines, or whenever and wherever maintenance is being performed. Failure to do so may result in injury to personnel or damage to equipment.
- For M1097, M1123, and all A1 and A2 model vehicles only, hearing protection is required for driver and passengers when engine is running. Noise levels produced by these vehicles exceed 85 dBA, which may cause injury to personnel.

NOTE

To apply parking brake, grasp handle firmly and pull upward until handle is locked in a straight-up position.

a. Ensure parking brake is applied.

b. Adjust driver's seat (para. 2-14).

WARNING

Visibility may be restricted with right rearview mirror.

c. Adjust left and right rearview mirrors. Ensure both mirrors provide a clear view (para. 3-24 or 3-25).

d. Ensure all windows are clean. If not, clean windows before attempting to move vehicle (refer to table 2-1).

WARNING

Ensure all slack from two-point seatbelt adjusting strap or three-point seatbelt is removed. Two-point seatbelt retracts but does not lock in any position. Three-point seatbelt retracts and will lock only during sudden stops or impact. Injury to personnel will result if an accident occurs and seatbelt is not used or adjusted properly.

NOTE

Fasten unused seatbelts to protect the belt ends from damage or dirt contamination.

e. Fasten and adjust seatbelt (para. 2-16).

f. Place transmission shift lever (8) in "N" (neutral) and transfer case shift lever (7) in desired range. See table 1-9 for transfer case range selection.

CAUTION

- Do not leave rotary switch in "RUN" position for extended periods of time. Glow plugs will continue to cycle and batteries will discharge leading to a no-start condition.
- Glare from the sun may make it difficult to tell if the wait-to-start lamp assembly is illuminated. If this occurs, shade the light with your hands to ensure that the wait-to-start lamp assembly goes out before attempting to start the vehicle.
- Starting the engine before the wait-to-start lamp goes out can result in starting problems.

g. Place rotary switch (1) to "RUN" and wait until WAIT-TO-START lamp assembly (2) goes out.

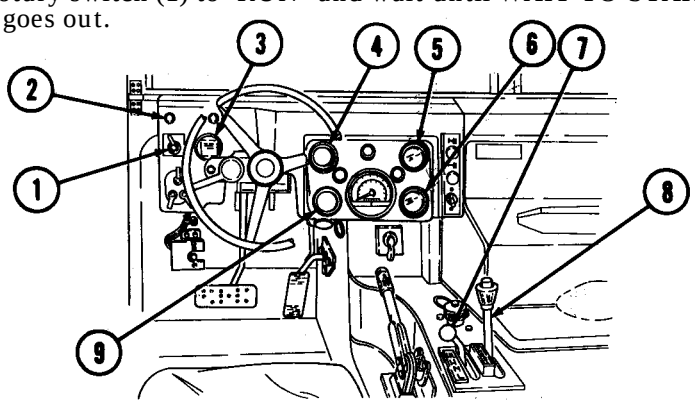

CAUTION

- If ambient temperature is above 0°F (-18°C), do not operate starter continuously for more than 20 seconds; wait 10 to 15

  seconds between periods of starter operation. Failure to do this will result in damage to the starter.
- If any instrument reading is not normal, stop engine. Failure to do this will result in damage to the engine. Refer to

  troubleshooting, table 3-1.
- If engine does not start, leave rotary switch in "RUN" position and wait 10 to 15 seconds before trying to restart. Failure to do

  this will result in damage to glow plugs or starter.
- If you accidentally turn the rotary switch to "ENG STOP" position after an unsuccessful attempt to start, wait 90 seconds before trying to restart. Failure to do this will result in damage to glow plugs.

h. Place rotary switch (1) to 'START." Release lever after engine starts. Lever will return automatically to “RUN".

NOTE

Before the engine reaches operating temperature, the WAIT-TO-START lamp may flicker and a clicking noise may be heard. This is due to glow plug relay cycling and is a normal condition.

i. Allow engine to warm up for approximately one minute and ensure instruments indicate the following:

(1) Oil pressure gauge (4) should register above approximately 6 psi (41 kPa) with engine at idle.

(2) Voltmeter (6) should register in green area.

(3) Fuel gauge (9) should indicate fuel level in fuel tank.

(4) Air restriction gauge (3) should not register within the red zone.

j. Stop engine if any of the following conditions occur:

(1) Excessive engine vibration.

(2) Oil pressure does not register or suddenly drops to or less than approximately 6 psi (41 kPa) with engine at idle.

(3) Air restriction gauge (3) is within the red zone.

k. If engine overheating occurs:

(1) Park vehicle, allow engine to idle.

(2) Observe coolant temperature gauge (5) for steady cooling.

CAUTION

Stop engine if coolant temperature gauge suddenly increases beyond approximately 230°F (110°C), or damage to engine will result.

(3) If engine coolant temperature continues to increase, or does not decrease, as indicated by engine temperature gauge (5), stop engine. Perform troubleshooting procedures in table 3-1.

2-11. PLACING VEHICLE IN MOTION

WARNING

- This vehicle has been designed to operate safely and efficiently within the limits specified in this TM. Operation beyond these limits are prohibited IAW AR 750-1 without written approval from the Commander, U.S. Army Tank-automotive and Armaments Command, ATTN: AMSTA-CM-S, Warren, MI 48397-5000.
- Communications shelters AN/GRC-122 and AN/GRC-142 RATT may overload truck by up to 500 lbs (227 kg). Use caution when driving to avoid damage to equipment or injury to personnel.

NOTE

The following procedures apply to a vehicle being driven in good weather on high traction surfaces where little or no wheel slippage is evident. For operating the vehicle under unusual conditions; i.e., unusual terrain, cold weather, ice, snow, dusty or sandy areas, mud or rain, refer to section IV.

a. Be sure all auxiliary equipment and tools are stored for travel.

CAUTION

- Vehicle must be stopped, engine off, and transmission shift lever placed in “N” (Neutral), before transfer case can be shifted. Failure to do this will result in damage to drivetrain.
- Do not place transfer case shift lever in “H/L” (high lock range) or “L” (low range) on high traction surfaces where little or no wheel slippage is evident, particularly when encountering sharp, continuous turns. Failure to operate the vehicle with transfer case in “H” (high range) on high traction surfaces, particularly when encountering sharp, continuous turns, can damage drivetrain.

b. With transmission shift lever (2) in “N” (neutral), select “H” (high range) transfer case driving gear range using transfer case shift lever (3). This range is for normal driving in good weather, or on high traction surfaces.

c. Start engine (para. 2-10).

d. Set vehicle light switch (7) (para. 2-13).

CAUTION

Ensure parking brake is released completely before operating the vehicle. Failure to do so may cause damage to equipment.

NOTE

- To release parking brake, grasp handle firmly and push forward until handle is seated in its most forward position.
- Starting with A1 vehicles, parking brake handles have a safety release button which must be depressed to release the parking brake.
- If covering warning lamp with tape, put a pinhole in the tape in order to recognize when the light is on.

e. Depress service brake pedal (6). Depress parking brake release button and release parking brake lever (4). The brake warning lamp assembly (1) should go out.

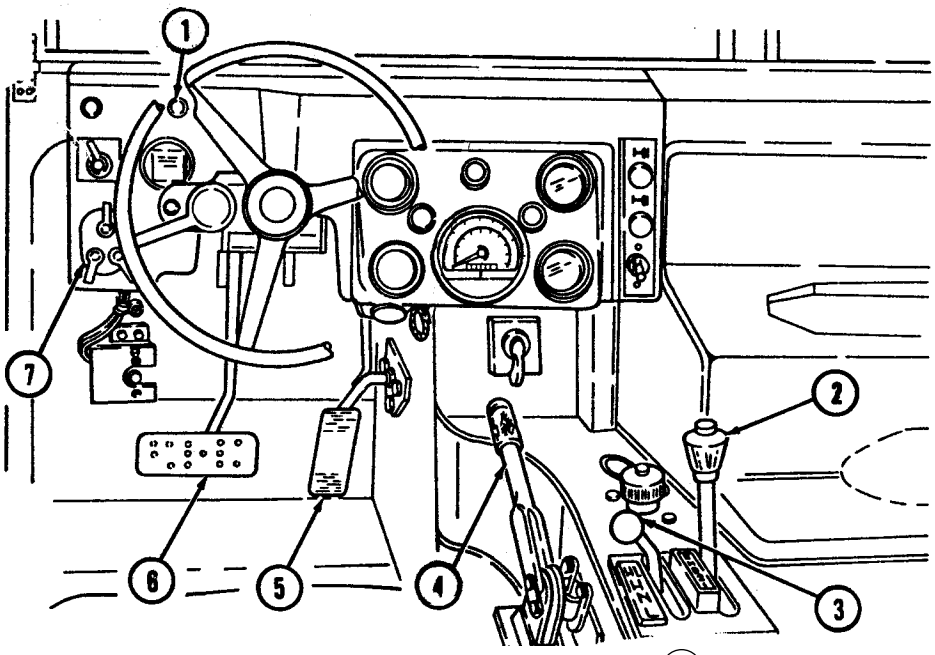

f. Place transmission shift lever (2) in "D" (drive) or "(D)" (overdrive) for M1123 and "A2" series vehicles), for normal driving.

g. Release service brake pedal (6), and depress accelerator pedal (5). Accelerate at a safe, steady speed.

h. Upshift or downshift transmission shift lever (2) when road and/or traffic conditions change.

WARNING

Extreme caution shall be taken when transporting personnel. Rollover protection and seatbelts are available for the crew area only and are not provided in the troop/cargo area. Failure to use basic safe driving skills may result in injury or death to personnel and damage to equipment.

NOTE

To help judge clearance more accurately, guide rods can be used at the discretion of the unit commander.

i. Exercise extreme caution when transporting personnel. Rollover protection is available for the crew area only and is not provided in the troop/cargo area. Although certain design characteristics of the vehicle, such as vehicle width, ground clearance, independent suspension, etc., provide improved capabilities, accidents can still happen.

WARNING

Vehicle speed must be reduced consistent with weather and road/terrain conditions. Obstacles such as stumps and boulders must be avoided. Failure to use basic safe driving techniques/skills may result in injury or death to personnel and damage to equipment.

j. Operators are reminded to observe basic safe driving techniques/skills when operating the vehicle, especially when transporting personnel.

2-12. STOPPING THE VEHICLE AND ENGINE

a. Release accelerator pedal (5).

b. Depress service brake pedal (6) to bring vehicle to a gradual stop.

NOTE

The automatic transmission of the M1123 and"A2" series vehicles has a "PARK" position. Proceed to steps f and g for the M1123 and "A2" series vehicles.

c. Move transmission shift lever (3) to "N" (neutral).

d. If vehicle must be backed into parking position, have another person act as a ground guide to direct reverse operation.

WARNING

- The automatic transmission of the M998 series vehicle does not have a "PARK" position. Whenever the vehicle is parked, or the transmission is in "NEUTRAL," the parking brake MUST BE APPLIED. Damage to equipment and injury to personnel may occur if these instructions are not followed.
- Chock blocks shall be used when parking a vehicle with inoperative parking brakes, when operating in extreme cold conditions, when parking on inclines, or whenever and wherever maintenance is being performed. Failure to do this may result in injury to personnel or damage to equipment.

NOTE

To apply parking brake, grasp handle firmly, and pull upward until handle is locked in a straight-up position.

e. Once vehicle is completely stopped, apply parking brake lever (4).

WARNING

- The automatic transmission of the M1123 and "A2" vehicles have a "PARK" position. Never use the transmission shift lever in place of the parking brake. Set the parking brake. Make sure the transmission shift lever is in the "P" (park) position and transfer case shift lever is NOT in the "N" (neutral) position. Damage to equipment and injury to personnel may occur if these instructions are not followed.

NOTE

- Some vehicles have parking brake levers that do not lock. If equipped with a chain lock, secure parking brake lever with the chain lock to prevent accidental release of the parking brake. If not equipped, refer to unit maintenance for installation procedures.
- Steps f and g apply to the M1123 and "A2" series vehicles only.

f. Once vehicle is completely stopped, apply parking brake lever (4).

g. Move transmission shift lever (3) to "P" (park).

h. Turn light switch (7) to "OFF."

i. Place rotary switch (1) to "ENG STOP."

NOTE

If there is engine run-on, pinch the fuel return line with your fingers or a pair of pliers to stop the engine. Notify unit maintenance.

j. Lock steering wheel with cable (2) and chock wheels if tactical situation permits.

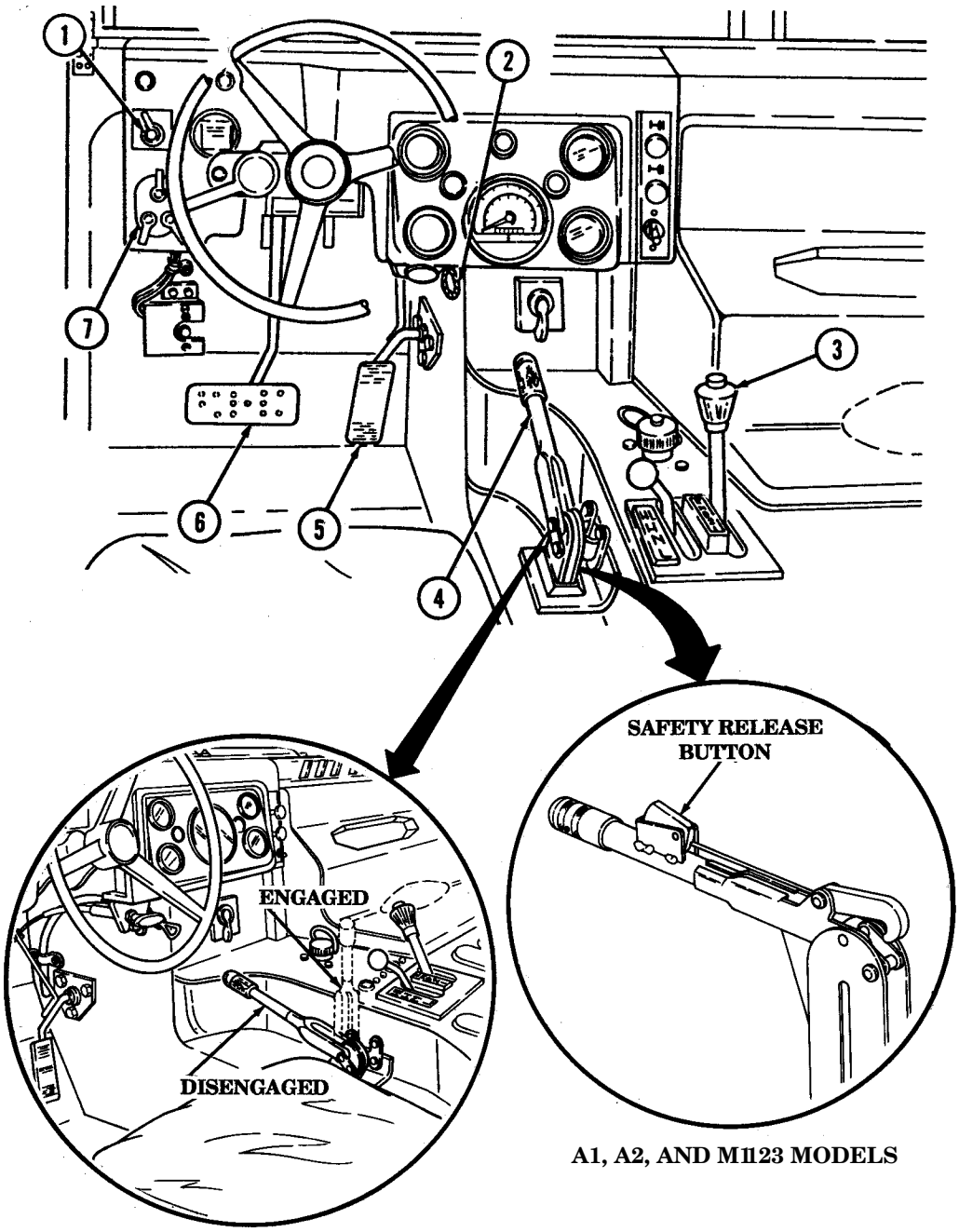

A1, A2, AND M1123 MODELS

A1, A2, AND M1123 MODELS

2-13. OPERATION OF VEHICLE LIGHT SWITCH

a. To illuminate instrument panel:

(1) Lift unlock lever (2) to "UNLOCK" and hold in position.

(2) Turn selector switch lever (1) to any "ON" position except "B.O. MARKER."

(3) Turn auxiliary lever (3) to "DIM" or "PANEL BRT" (bright).

b. For normal daylight driving, turn selector lever (1) to "STOPLIGHT."

c. For night driving, turn selector lever (1) to "SERVICE DRIVE." The headlight dimmer foot switch is depressed to provide high beam service light operation. The indicator light (4) on the instrument panel should illuminate when high beams are operating.

d. In blackout operations:

(1) When driving vehicle, turn selector lever (1) to "B.O. DRIVE."

(2) When vehicle is parked, turn selector lever (1) to "B.O. MARKER."

e. To illuminate parked vehicle at night (if tactical situation permits):

(1) Keep selector lever (1) in "SERVICE DRIVE."

(2) Turn auxiliary lever (3) to "PARK."

f. Move turn signal lever up for right turns, down for left turns.

g. For hazard warning lights (blinking lights):

NOTE

- For vehicles built prior to 1990, the warning flashers override operation of the brake lights. For vehicles built in 1990 and after, a brake light override feature is installed.
- The headlights cannot be turned on when auxiliary lever (3) is in the "PARK" position.

(1) Turn selector lever (1) to "SERVICE DRIVE" or "STOPLIGHT."

(2) Pull warning hazard tab out and move turn signal lever up to lock lever in place.

(3) To deactivate, move turn signal lever back to neutral.

h. For horn operation, turn selector lever (1) to either "STOPLIGHT" or "SERVICE DRIVE."

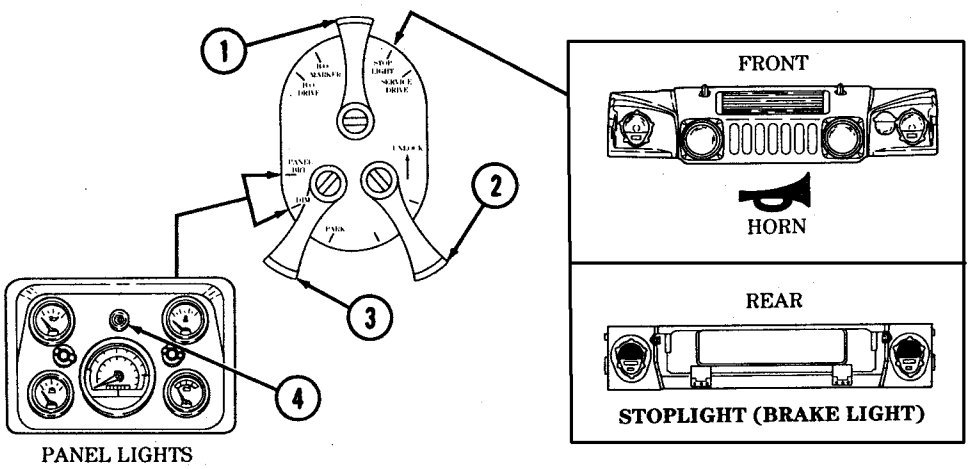

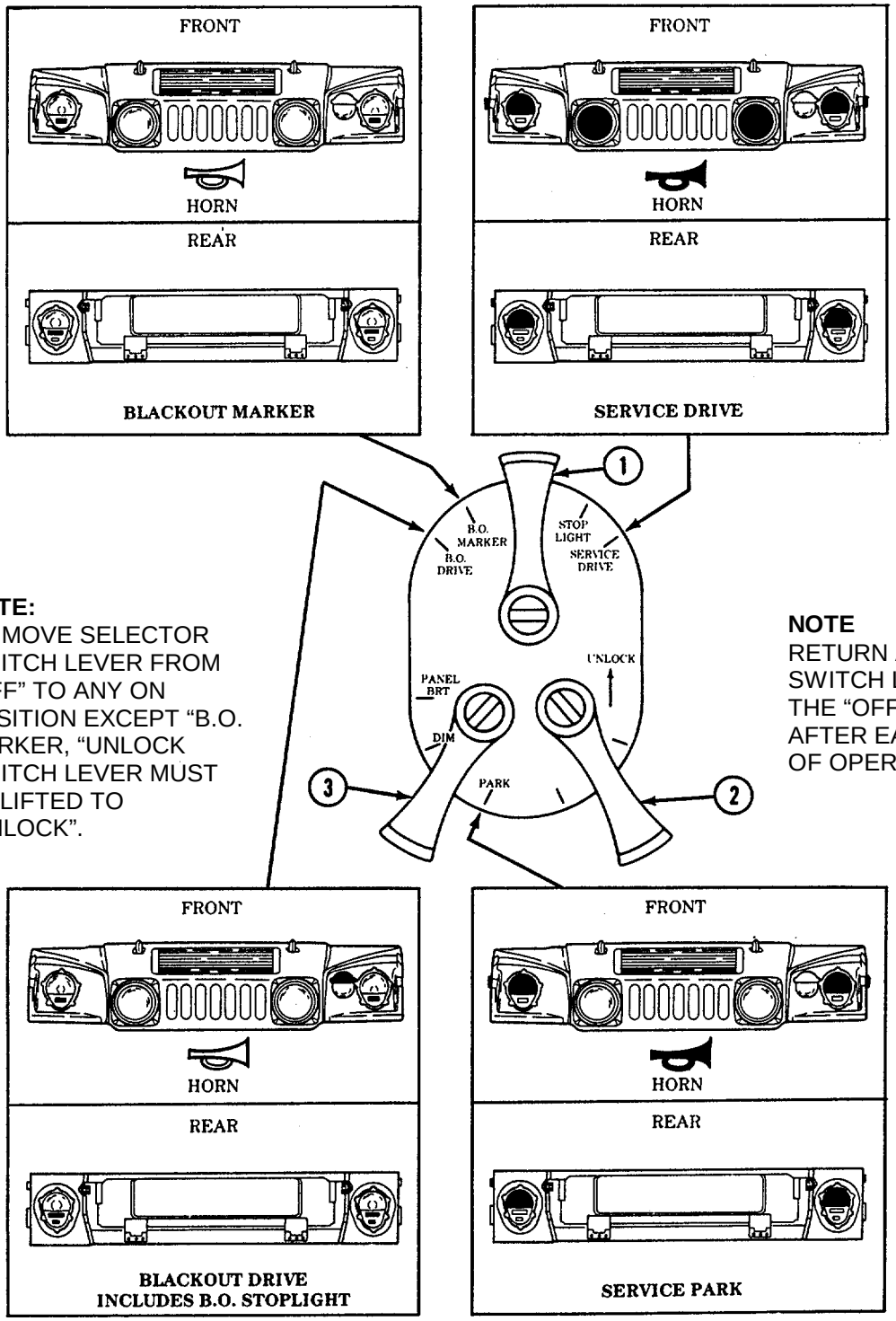

NOTE:
TO MOVE SELECTOR SWITCH LEVER FROM "OFF" TO ANY ON POSITION EXCEPT "B.O. MARKER, "UNLOCK SWITCH LEVER MUST BE LIFTED TO "UNLOCK".

NOTE
RETURN ALL LIGHT SWITCH LEVERS TO THE "OFF" POSITION AFTER EACH PERIOD OF OPERATION.

2-14. ADJUSTING DRIVER'S SEAT

NOTE

- Perform steps a and b for vehicles with old configuration driver's seat.
- Perform steps c and d for vehicles with new configuration driver's seat.

a. To adjust seat (1), exit vehicle and lift seat (1) up and slide seat (1) forward or rearward so that seat mount pins (3) are positioned in desired slots (2).

b. Adjust seat (1) for most comfortable and effective position.

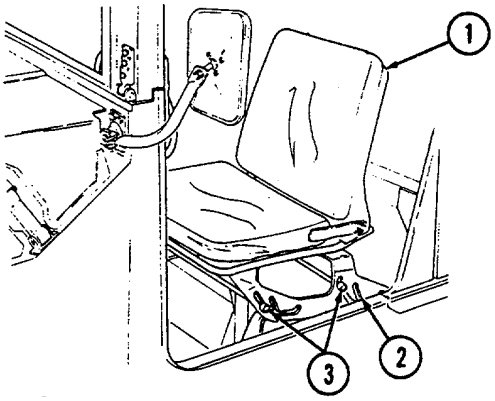

c. To adjust horizontal position of seat:
   (1) Pull seat adjustment lever (4) upward and slide seat (5) to desired position.
   (2) Release seat adjustment lever (4) to lock seat (5) into position.

d. To adjust vertical position of seat:
   (1) Pull seat adjustment lever (4) upward and allow body weight to lower seat (5).
   (2) To raise seat (5), pull seat adjustment lever (4) upward and remove body weight from seat (5).
   (3) Release seat adjustment lever (4) to lock seat (5) in desired position.

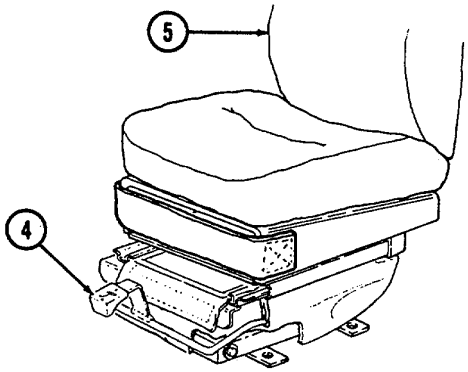

2-15. COMPANION SEAT ASSEMBLY AND BATTERY BOX COVER REPLACEMENT

a. Removal of companion seat assembly and battery box cover.

(1) Pull seat adjustment lever (10) upward and slide companion seat assembly (6) forward.

(2) Release two latches (9) securing companion seat assembly (6) and battery box lever (7) to battery box (8)

(3) Lift and pull companion seat assembly (6) and battery box cover (7) forward and remove from battery box (8).

b. Installation of companion seat assembly and battery box cover.

(1) Install companion seat assembly (6) and battery box cover (7) on battery box (8) and secure with two latches (9).

(2) Pull seat adjustment lever (10) upward and slide companion seat assembly (6) to desired position.

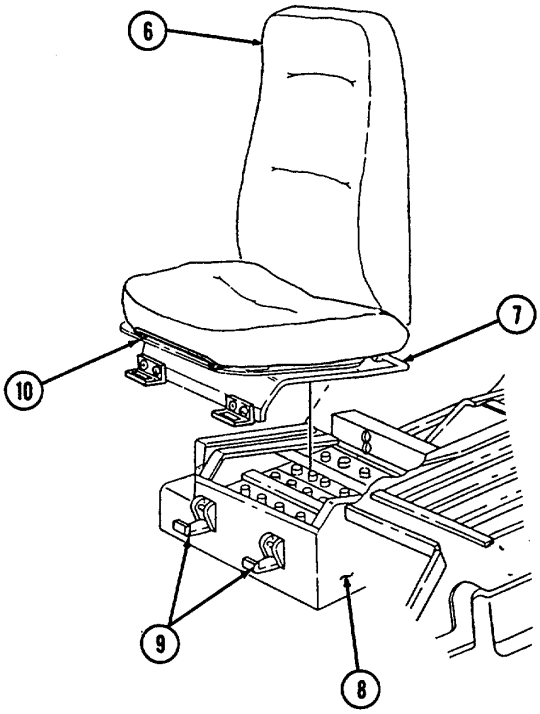

2-16. SEATBELT OPERATION

a. Two-Point Seatbelt.

WARNING

Ensure all slack from two-point seatbelt adjusting strap is removed. Two-point seatbelt retracts but does not lock in any position. Injury to personnel will result if an accident occurs and two-point seatbelt is not in use or adjusted properly.

(1) **Seatbelt Fastening**. Pull seatbelt (1) across body and fasten strap in belt buckle (3).

(2) **Seatbelt Adjustment**. Pull adjustable strap (4) to remove slack from seatbelt (1). Seatbelt (1) must fit snugly across operator's hips.

(3) **Seatbelt Unfastening**. Push release button (2) on belt buckle (3) to release seatbelt (1).

b. Three-Point Seatbelt.

WARNING

Ensure all slack from three-point seatbelt is removed. Three-point seatbelt retracts and will lock only during sudden stops or impact. Injury to personnel will result if an accident occurs and three-point seatbelt is not in use or adjusted properly.

(1) **Seatbelt Fastening.** Pull shoulder harness and seatbelt (6) across body and fasten latch plate (5) to belt buckle (3).

(2) **Seatbelt Adjustment**. Pull shoulder harness strap (6) through latch plate (5) and remove slack from seatbelt (6). Seatbelt (6) must fit snugly across operator's hips, shoulder, and chest.

(3) **Seatbelt Unfastening**. Push release button (2) on belt buckle (3) to release seatbelt (6).

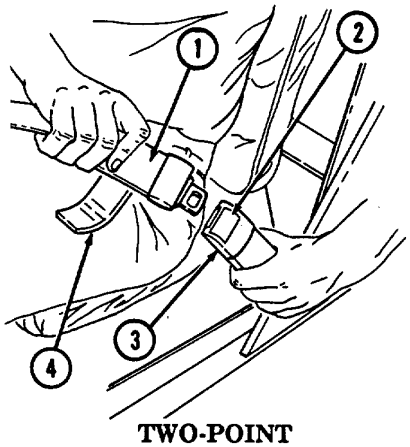

TWO-POINT SEATBELT

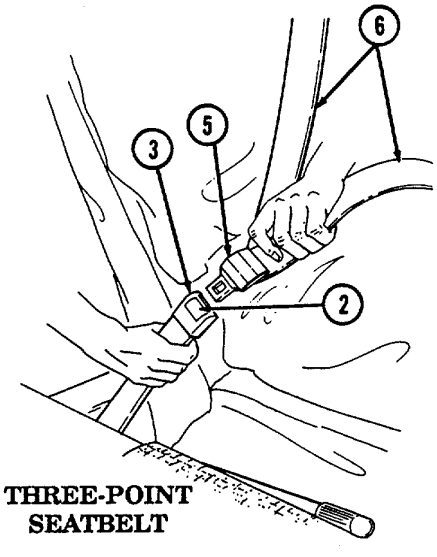

THREE-POINT SEATBELT

2-17. DEFROSTER OPERATION (ALL EXCEPT A2 VEHICLES)

a. To defrost windshield:

(1) Start engine (para. 2-10).
(2) Push fresh air intake lever (4) forward to close grille.
(3) Slide baffles (2) to the right to close air vents.
(4) Loosen thumbscrew (3) and position deflector to close air flow to the floor of vehicle. Tighten thumbscrew (3).
(5) Turn heater fan switch (6) "ON" to desired setting, "HIGH" OR “LOW."
(6) Position heater control knob (5) to desired setting.

NOTE

- To obtain maximum air flow to driver’s side windshield only, pull defroster control knob halfway out.
- To obtain even air flow to both sides of the windshield, pull defroster control knob all the way out.
- To allow warm air into crew area while defrosting windshield, slide baffles to open air vents.

(7) Position defroster control knob (1) to desired setting.

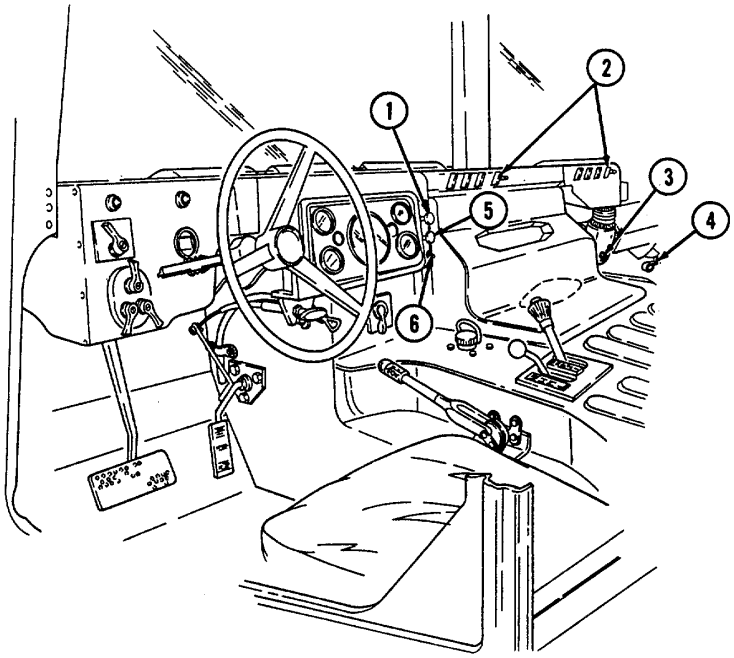

2-18. DEFROSTER OPERATION (A2 VEHICLES)

To defrost windshield:

(1) Start engine (para. 2-10).
(2) Push fresh air intake lever (3) forward to close grille.
(3) Turn heater fan switch (4) "ON" to desired setting, “HIGH" or "LOW."
(4) Position heater control knob (2) to desired setting.
(5) Push defroster control knob (1) in.

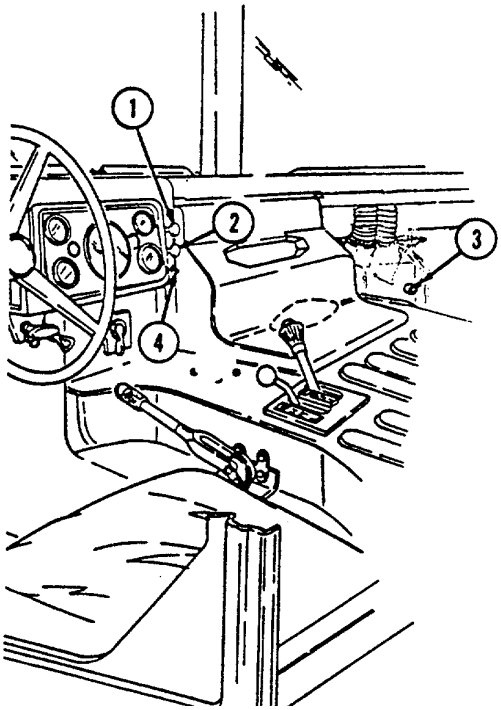

2-19. HEATER OPERATION (ALL EXCEPT A2 VEHICLES)

To operate heater:

(1) Start engine (para. 2-10).
(2) Push fresh air intake lever (4) forward to close grille.

NOTE

Perform step 3 if air flow to floor of vehicle is closed.

(3) Loosen thumbscrew (3) and position deflector to allow air flow to floor of vehicle. Tighten thumbscrew (3).
(4) Slide baffles (2) to the left to open air vents.
(5) Turn heater fan switch (6) "ON" to desired setting, “HIGH" OR "LOW."

NOTE

For maximum heat, pull heater control knob all the way out.

(6) Position heater control knob (5) to desired setting.
(7) Push defroster control knob (1) in.

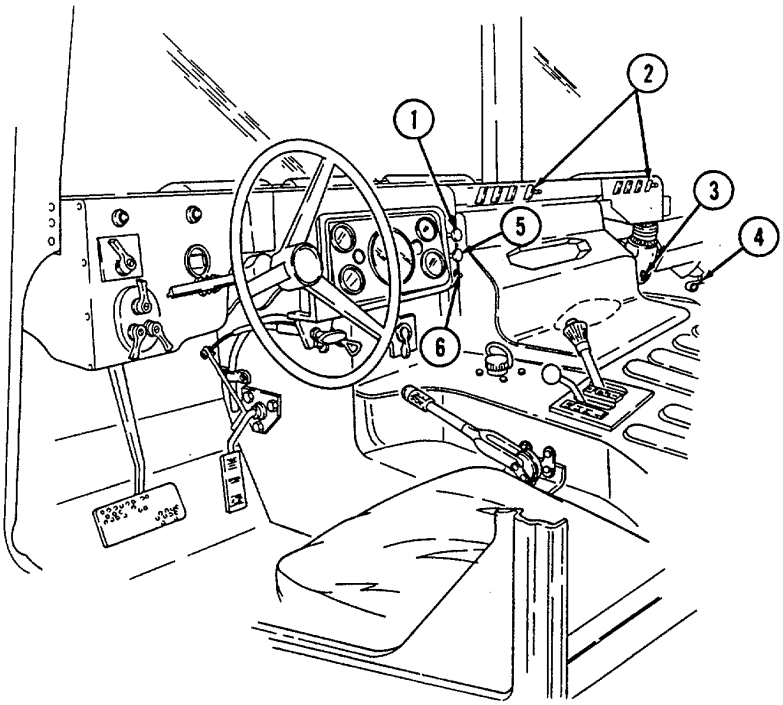

2-20. HEATER OPERATION (A2 VEHICLES)

To operate heater.

(1) Start engine (para. 2-10).
(2) Push fresh air intake lever (3) forward to close grille.
(3) Turn heater fan switch (4) “ON" to desired setting, “HIGH” or “LOW."

NOTE

For maximum heat, pull heater control knob all the way out.

(4) Position heater control knob (2) to desired setting.
(5) Push defroster control knob (1) out.

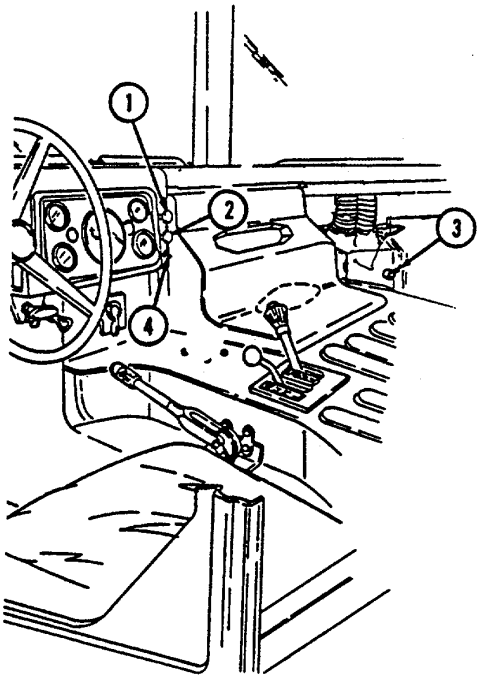

2-21. TAILGATE OPERATION

a. Lowering Tailgate.

WARNING

Do not use tow pintle as a step when entering or exiting vehicle cargo area. Failure to do so may result in injury to personnel or damage to equipment.

CAUTION

The tailgate should not be lowered further than the length of tailgate chains. Tailgate chains should always be used to support tailgate when open. Do not allow tailgate to slam against lifting shackles. Damage to equipment may occur.

(1) Remove two tailgate chain hooks (6) securing tailgate (7) to rear of vehicle body.

(2) Lower tailgate (7) and secure with two tailgate chain hooks (6).

b. Raising Tailgate.

(1) Raise tailgate (7).

(2) Secure tailgate (7) to rear of vehicle body with two tailgate chain hooks (6).

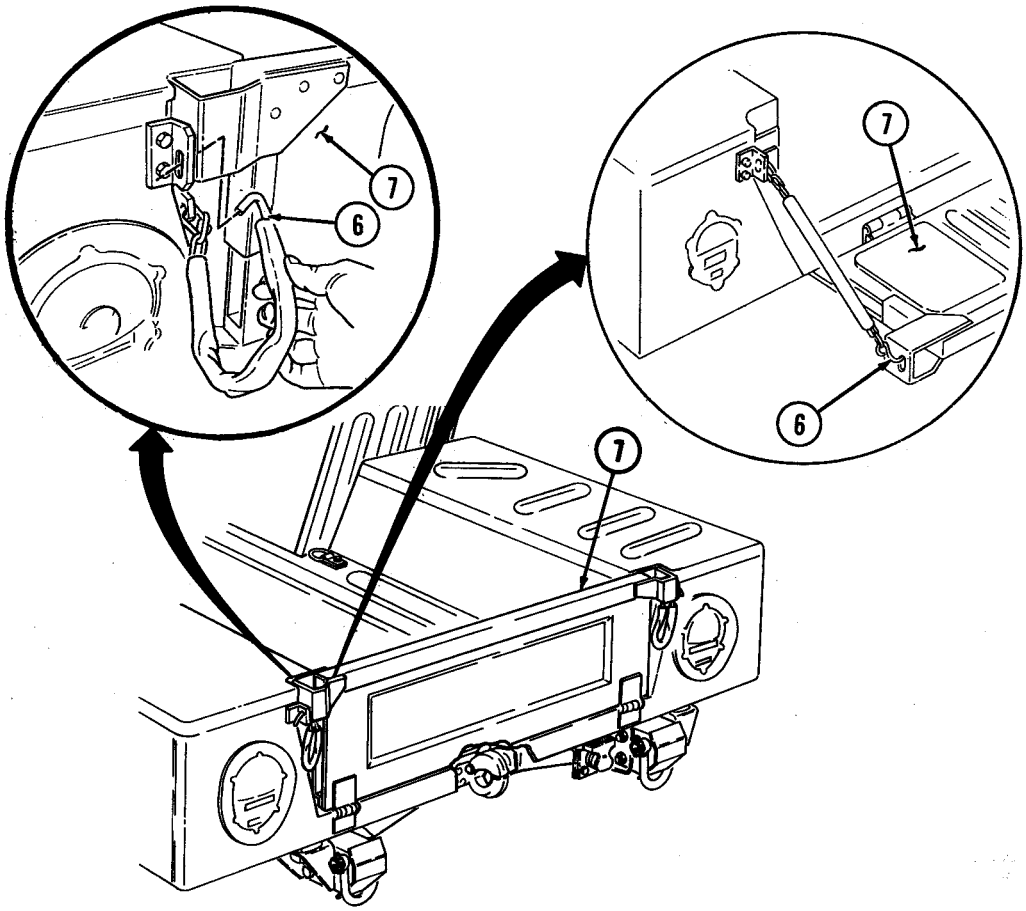

2-22. PIONEER TOOL STOWAGE RACK OPERATION

a. Tool Stowage Rack Removal.

(1) Release two tension latches (3) from latch strikes (2) and lower tool rack (4)
(2) Lift tool rack (4) out of support bracket (1) to remove tool rack (4).

b. Tool Removal.

NOTE

Note location of straps for installation.

(1) Loosen and disconnect two strap assemblies (8) securing tools.
(2) Remove mattock head (6) from tool rack (4).
(3) Remove shovel (7) from retainer (12) by turning 90° from stowage position and sliding through tool rod support (9).
(4) Remove mattock handle (5) from tool rack (4).
(5) Unlatch ax head retainer (11) and slide head out of ax head support (1(and remove ax (13).

NOTE

For improved pioneer tool accessibility, tools can be stored inside the vehicle cargo area at the discretion of the unit commander. Tools must be secured in place.

c. Tool Installation.

(1) Install ax (13) by sliding ax head into ax head support (10); secure with retainer (11).
(2) Install mattock handle (5) in tool rack (4).
(3) Position shovel (7) through tool rod support (9) and secure handle of shovel into retainer (12).
(4) Install mattock head (6) in tool rack (4).
(5) Connect and tighten two strap assemblies (8) to secure tools to tool rack (4).

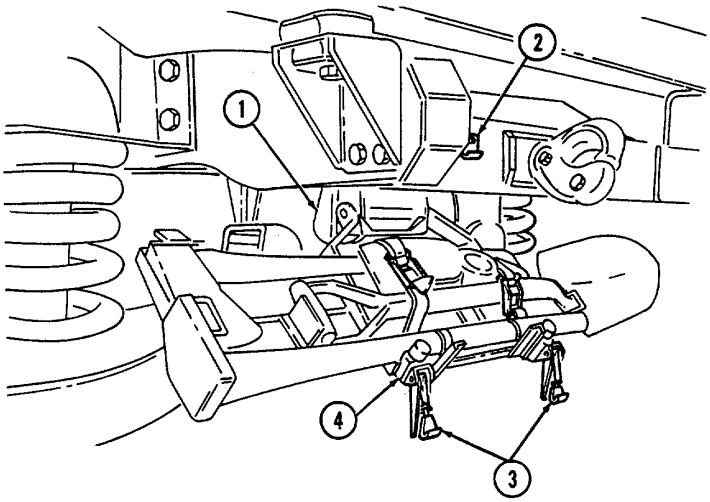

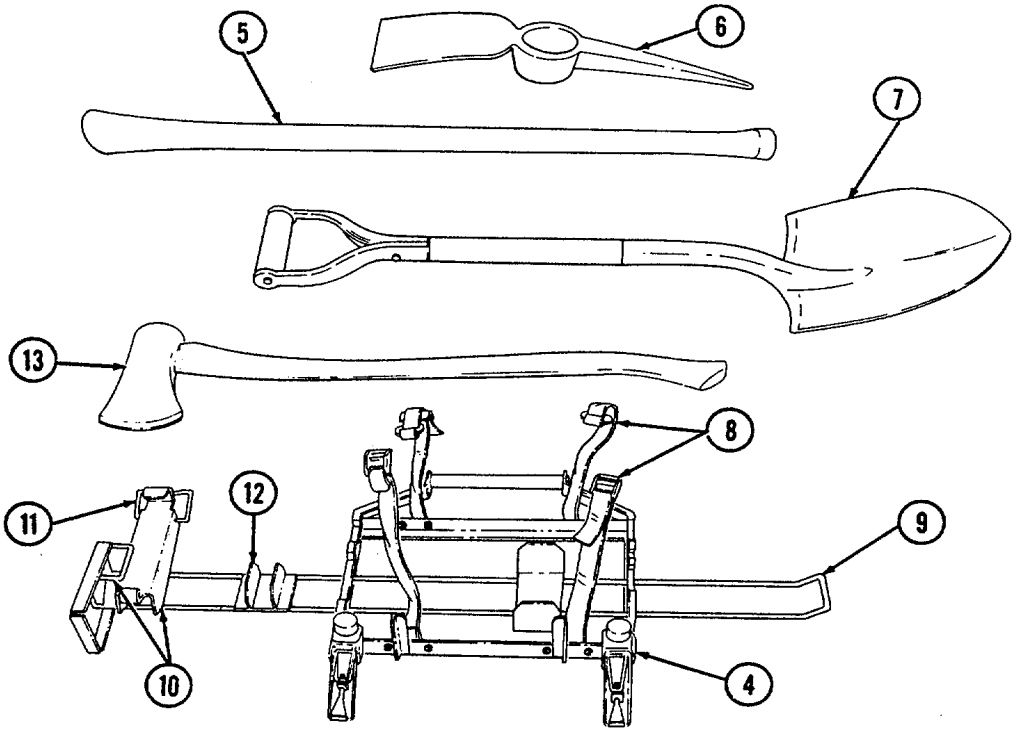
5
6
7
13
8
12
11
9
10
4

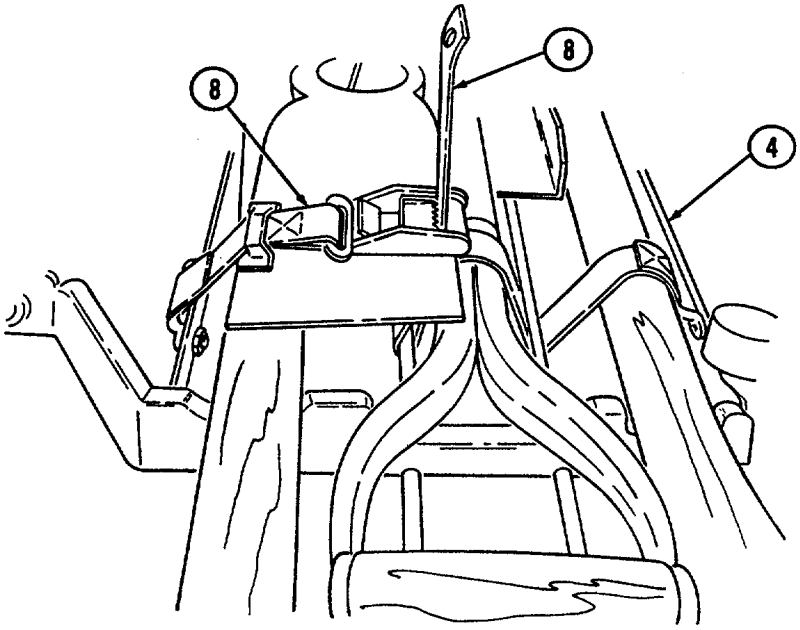
8
8
4

(6) Connect and tighten strap assembly (1) and secure tools.

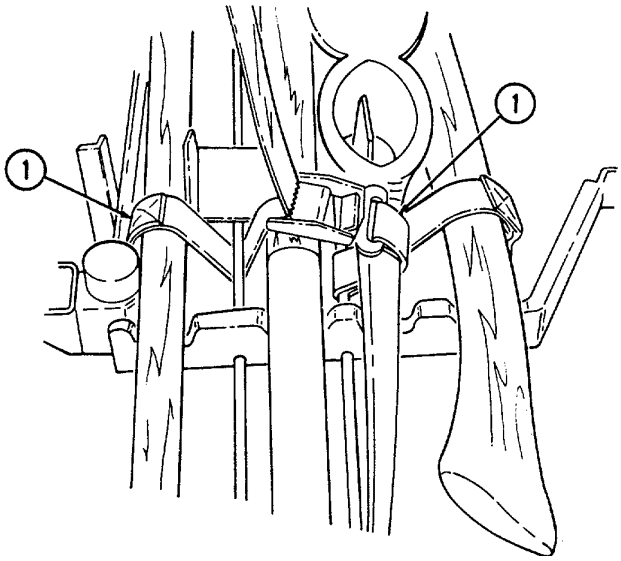

d. Tool Stowage Rack Installation.

(1) Place tool rack (5) in support bracket (2).
(2) Raise tool rack (5) and secure tension latches (4) to latch strikes (3).

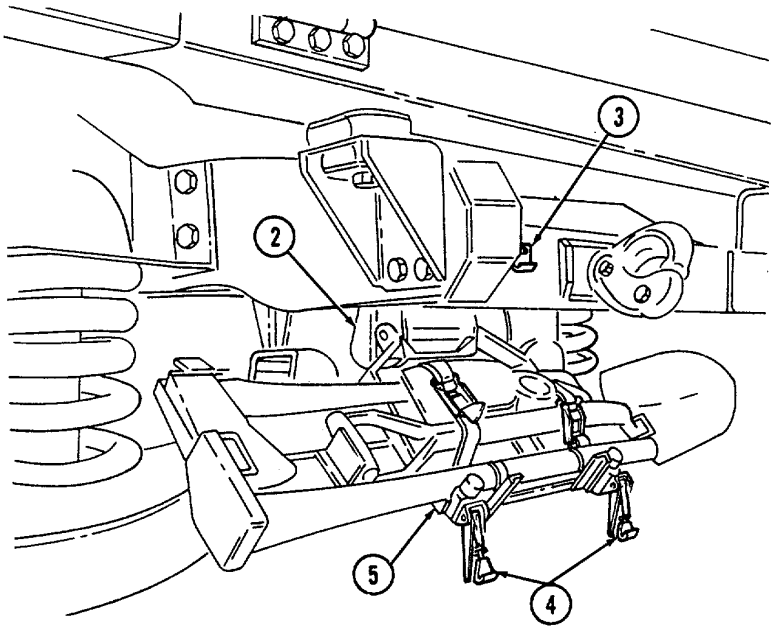

2-22.1. MAX TOOL KIT STOWAGE OPERATION

NOTE

Stowage location on M1025A2, M1043A2, and M1045A2 vehicles is behind left rear seat. Stowage location on M1035A2, M1097A2, and M1123 vehicles is on tunnel. The following procedure is for M997A2 vehicles.

a. Tool Removal.

(1) Disconnect two strap assemblies (4) in right footwell (3) and remove ax (1) and max tool kit case (2).

(2) Remove the following attachments from max tool kit case (2):

- Reversible rake/hoe attachment (11)
- Rake/hoe thumbscrew attachment (10)
- Shovel attachment (5)
- Six safety locking pins (7)
- Broad pick attachment (9)
- Pick attachment (8)
- Mattock attachment (6)

NOTE

- Using the ax and attachments, the max tool kit can be incorporated into seven basic hand tools.
- Ax blade must be covered with sheath before using kit.
- Read all safety and assembly instructions enclosed with max tool kit before using kit.

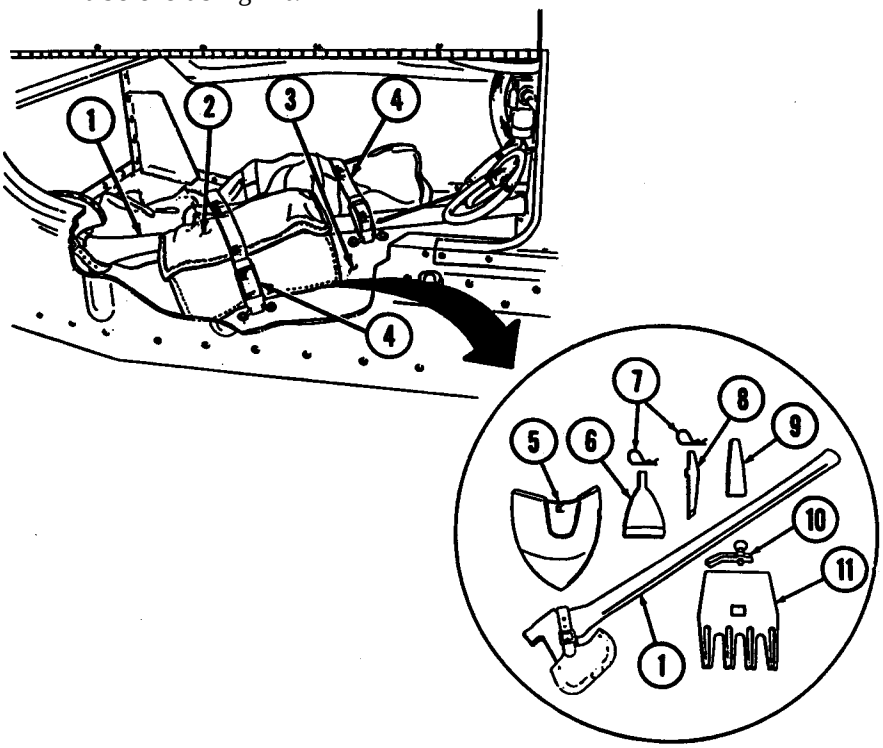

b. Reversible Rake/Hoe Attachment.

(1) Connect rake/hoe attachment (2) (with either rake or hoe in the working position) into socket (4) on end of ax (1).

NOTE

Thumbscrew must be seated tightly in rake/hoe attachment and socket of ax. Check thumbscrew often to be sure it does not work loose.

(2) Install thumbscrew (3) on rake/hoe attachment (2) and in socket (4) of ax (1). Tighten thumbscrew (3).

(3) To remove rake/hoe attachment (2), remove thumbscrew (3) from rake/hoe attachment (2) and ax (1).

c. Shovel Attachment.

NOTE

Shovel attachment is shown. Broad pick, pick, and mattock attachments are attached basically the same.

(1) Connect shovel attachment (5) into socket (4) on end of ax (1).

(2) Insert safety locking pin (6) into hole in end of taper on shovel attachment (5).

(3) To remove shovel attachment (5), remove safety locking pin (8) from shovel attachment (5) and ax (1).

d. Tool Installation.

(1) Replace attachments in the max tool kit case (7).

(2) Install max tool kit case (7) and ax (1) with two strap assemblies (9) in right footwell (8) of vehicle.

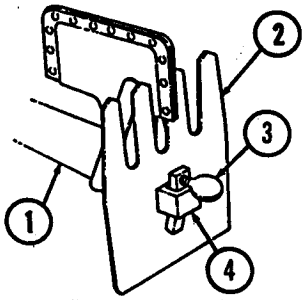

REVERSIBLE RAKE/HOE ATTACHMENT

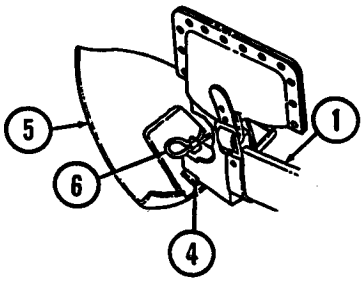

SHOVEL ATTACHMENT

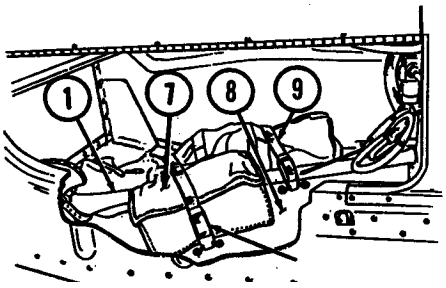

2-23. SLAVE STARTING OPERATION

a. Position slaving vehicle and disabled vehicle close enough for cable hookup.

b. Stop slaving vehicle engine.

NOTE

Vehicles with kits 5705623 and 5705624 and serial numbers 100,000 and above are equipped with screw-on covers.

c. Remove cover from slave receptacle of disabled vehicle and slaving vehicle.

WARNING

Ensure all battery cables in disabled vehicle are properly connected before connecting slave cable. Damage to batteries, cables, or serious injury to personnel may result from improperly connected batteries.

CAUTION

Use a twisting motion when installing slave cable to the receptacle. Forcefully pushing the cable onto the receptacle may cause damage to the receptacle mount.

NOTE

Ensure all electrical switches in both vehicles are turned off.

d. Connect slave cable to the slave receptacle of both vehicles.

e. Start slaving vehicle engine.

f. Start disabled vehicle engine.

CAUTION

Use a twisting motion when disconnecting slave cable from the receptacle. Forcefully pulling the cable from the receptacle may cause damage to the receptacle mount.

g. After engine starts, disconnect slave cable from both vehicles.

NOTE

- Screw-on type covers must be fully tightened to ensure a proper seal.
- For ease of removal, apply hand cleaner (Appendix D, Item 11) on the inside of the cover before installing receptacle covers.

h. Install receptacle covers on both vehicles.

i. Clean and stow slave cable.

2-24. TOWING OPERATION

CAUTION

- Do not exceed a towing speed of 30 mph (48 kph) or a towing distance of 30 mi (48 km) without first removing the front propeller shaft and/or rear propeller shaft with the parking brake rotor as specified in table 2-3. Failure to remove the necessary propeller shafts may result in damage to the transmission and/or transfer case.
- Before initiating vehicle recovery, operator should be familiar with basic vehicle recovery techniques and precautions. Refer to FM 20-22, Vehicle Recovery Operations.

NOTE

- If propeller shafts are to be removed, notify unit maintenance personnel.
- Towing pintle (front bumper) provides improved driver control when moving trailers in hard-to-maneuver areas and during aircraft loading operations.

Table 2-3. Towing Operations

Vehicle Towing Mode	Prop Shafts
Rear wheels up	Front off
Front wheels up	Rear off (Parking brake rotor removed)
Four wheels on ground	Front and rear off (Parking brake rotor removed)

a. Towing Vehicle from Front (Four Wheels on Ground).

CAUTION

Always use a tow bar when towing vehicle. Failure to do so may cause damage to equipment.

(1) Attach towbar (2) to the towing shackle brackets (4) of the vehicle to be towed and to the pintle hook (1) of the towing vehicle.

(2) Attach safety chain (5) to vehicle frames directly behind bumper (3) or bumperette (6). Let safety chain (5) dip to about 1 ft (30.5 cm) from the ground.

(3) If towing operation is over a distance of 30 mi (48 km), or towing speed is expected to be over 30 mph (48 kph), remove propeller shafts specified in table 2-3.

(4) Place transmission and transfer case shift levers in “N” (neutral).

(5) Depress parking brake release button and release parking brake lever.

(6) Proceed with towing operation. The vehicle is capable of towing a vehicle of similar weight, fully loaded, for a distance of 50 mi (80 km).

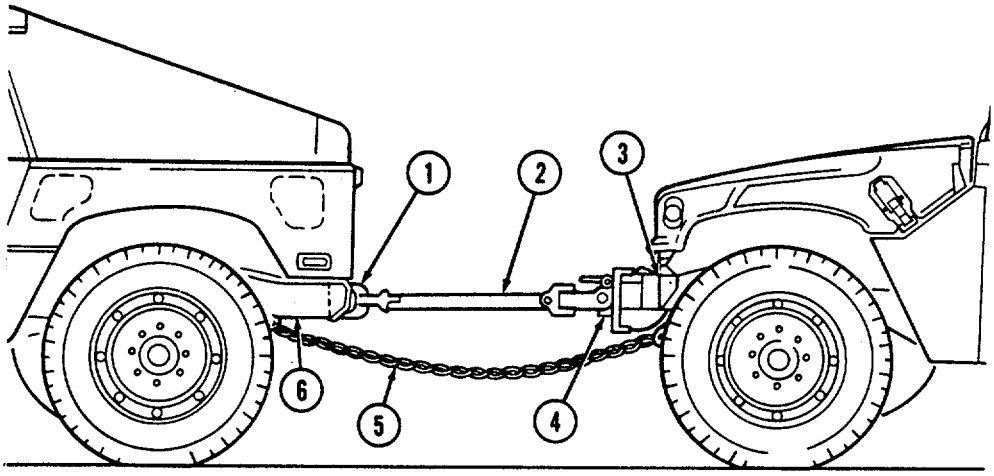
1
2
3
4
5
6

b. Towing Vehicle from Front (Front Wheels Up).

NOTE

Ensure that towbar is connected to towing brackets as shown in illustration.

(1) Attach towbar (5) to brackets (1) and to wrecker towing pintle.

CAUTION

Ensure that wrecker hoisting boom and hook are centered over the lifting shackles. Failure to do this may result in difficult turning during towing operations.

(2) Install chain assembly (3) through lifting shackles (2) and attach chain assembly (3) to the wrecker's hoisting hook (4).

(3) Secure safety chain (6) to towed vehicle's frame and to wrecker directly behind the bumpers and let safety chain (6) dip to about 1 ft (30.5 cm) from the ground.

(4) Hoist vehicle to be towed.

(5) If towing operation is more than a distance of 30 mi (48 km), or towing speed is expected to be over 30 mph (48 kph), remove rear propeller shaft and rotor.

(6) Place transmission and transfer case shift levers in "N" (neutral).

(7) Depress parking brake release button and release parking brake lever.

(8) Proceed with towing operation.

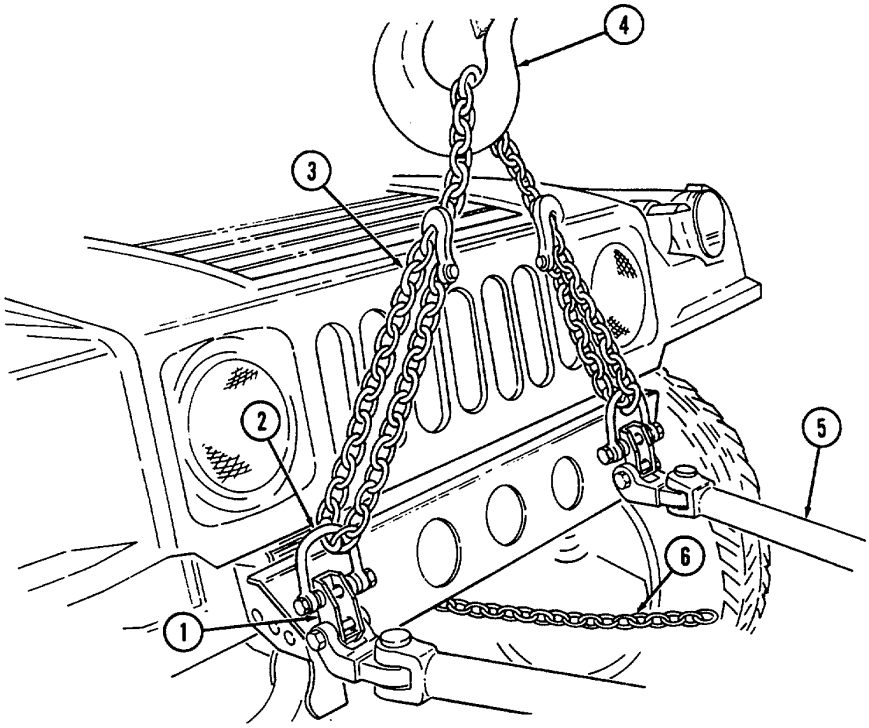

c. Towing Vehicle from Rear (Rear Wheels Up).

NOTE

It will be necessary to remove the wrecker lifting eyes (shackle) prior to attaching the towbar arms.

(1) Attach the eye of the towbar (5) to the pintle (7) of the vehicle requiring towing and the towbar arms to the wrecker rear lifting eye attaching bracket.

CAUTION

Ensure that wrecker hoisting boom and hook are centered over the lifting shackles. Failure to do this may result in difficult turning during towing operations.

(2) Install chain assembly (3) through the rear lifting shackles (8) and attach the chain assembly (3) to the wrecker's hoisting hook (4).

(3) Secure safety chain (6) to towed vehicle's frame and to wrecker directly behind bumper or bumperette and let safety chain (6) dip to about 1 ft (30.5 cm) from the ground.

WARNING

Prior to towing vehicle with rear wheels up, secure steering wheel to prevent front wheels from turning. Failure to do this may cause damage to vehicle and injury or death to personnel. (4) Secure steering wheel.

(5) If towing operation is more than a distance of 30 mi (48 km), or towing speed is expected to be over 30 mph (48 kph), remove front propeller shaft.

(6) Place transmission and transfer case shift levers in "N" (neutral).

(7) Depress parking brake release button and release parking brake lever.

(8) Lift rear wheels from ground.

(9) Proceed with towing operations.

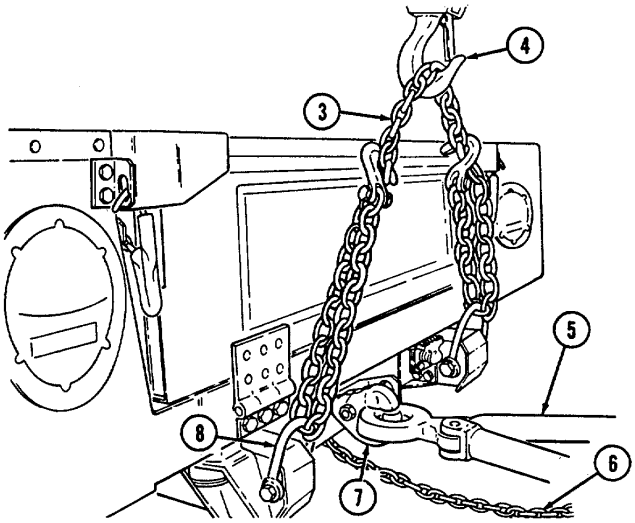

d. Towing S250 Shelter Vehicle from Rear (Rear Wheels Up).

NOTE

It will be necessary to remove the wrecker lifting eyes (shackle) prior to attaching the towbar arms.

(1) Attach the eye of the towbar (3) to the pintle (4) of the vehicle requiring towing and the towbar arms to the wrecker rear lifting eye attaching bracket.

CAUTION

Ensure that wrecker hoisting boom and hook are centered over the lifting shackles. Failure to do this may result in difficult turning during towing operations.

NOTE

If necessary, relocate the rear lifting shackles from the ends of the bumper to the location indicated.

(2) Install the two hooks of chain assembly (1) through the rear lifting shackles (6) and attach the chain assembly (1) to the wrecker's hoisting hook (2).

(3) Secure safety chain (5) to towed vehicle's frame and to wrecker directly behind bumpers and let safety chain (5) dip to about 1 ft (30.5 cm) from the ground.

WARNING

Prior to towing vehicle with rear wheels up, secure steering wheel to prevent front wheels from turning. Failure to do this may cause damage to vehicle and injury or death to personnel.

(4) Secure steering wheel.
(5) If towing operation is over a distance of 30 mi (48 km), remove front propeller shaft.
(6) Place transmission and transfer case shift levers in "N" (neutral).
(7) Depress parking brake release button and release parking brake lever
(8) Lift rear wheels from ground.

CAUTION

Do not exceed 15 mph (24 kph) towing speed. Avoid sharp turns and U-turns when towing. Failure to comply may cause damage to equipment.

(9) Proceed with towing operations.

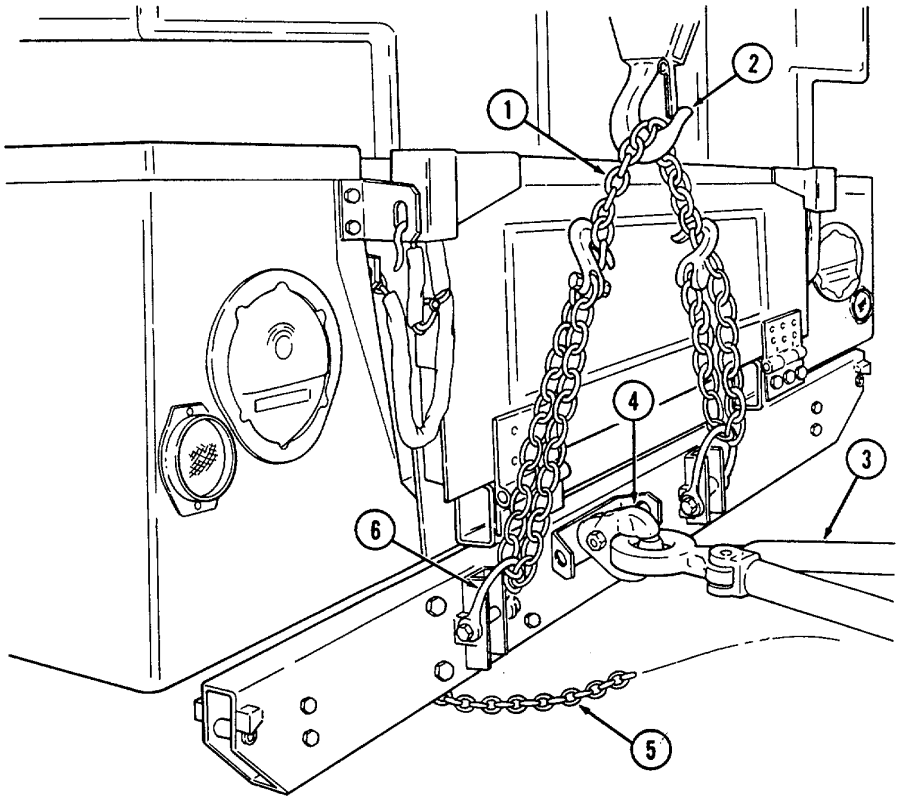
1
2
3
4
5
6

e. Towing M996, M996A1, M997, M997A1, and M997A2 Ambulance Vehicles from Rear (Rear Wheels Up).

(1) Install eye (12) of towbar (9) in pintle hook (11) of towing vehicle and secure pintle hook (11) with cotter pin (10).

(2) Remove two safety pins (16) and connector pins (3) securing two clamps (2) to towbar extension legs (7) and remove clamps (2).

(3) Install two clamps (2) on rear bumper (1) of disabled vehicle with adjusting nuts (17) facing downward and clamp chains (18) over top of bumper (1).

(4) Remove two safety pins (14) and extension pins (13) securing extension legs (7) to towbar (9), and adjust extension legs (7) length to attach to two clamps (3). Secure extension legs (7) to two clamps (2) with two connector pins (3) and safety pins (16).

(5) Secure extension legs (7) to towbar (9) with two extension pins (13) and safety pins (14).

(6) Tighten two adjusting nuts (17) on clamps (2) to secure clamp chains (18) to bumper (1).

CAUTION

Wrecker hoisting boom should be positioned so that chain from wrecker boom hook to towing pintle makes minimal contact with rear of ambulance body. It may be necessary to extend towbar legs to provide sufficient hoisting chain clearance to prevent damage to rear of ambulance body.

(7) Attach hoisting chain (5) to wrecker boom hook (6) and towing pintle (4) of towed vehicle, ensuring towing pintle latch (15) is facing downward.

(8) Attach and secure safety chain (8) to frame of disabled vehicle and to wrecker, directly behind bumper (1). Allow chain (8) to dip to approximately 1 ft (30.5 cm) above ground.

WARNING

Prior to towing vehicle with rear wheels up, secure steering wheel to prevent front wheels from turning. Failure to do this may cause damage to vehicle, injury, or death.

(9) Secure steering wheel.

(10) If towing distance is more than 30 mi (48 km), remove front propeller shaft.

(11) Place transmission and transfer case shift levers in “N” (neutral) position.

(12) Lift rear end of disabled vehicle off ground.

CAUTION

Do not exceed 15 mph (24 kph) towing speed. Avoid sharp turns and U-turns when towing. Failure to comply may cause damage to equipment.

(13) Proceed with towing operations.

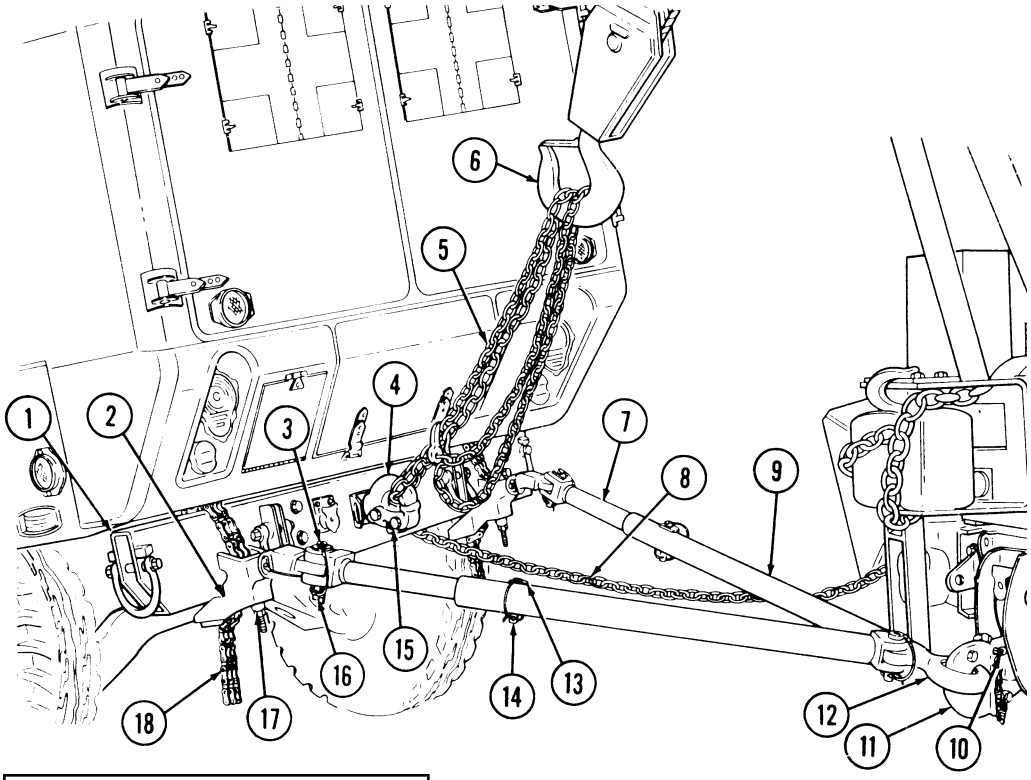

2-25. TRAILER TOWING

WARNING

Towing trailers too large or too small for the vehicle capacity is dangerous. These trailers do not track vehicle properly, cargo shifting occurs, and the likelihood of trailer capsizing during movement is increased. This could result in damage to equipment, and injury or death to personnel.

CAUTION

Be sure to close tailgate before towing trailer. Failure to do so may cause damage to the master cylinder.

NOTE

- Towing any trailer with a HMMWV other than the authorized M116 series, M101 series, M1101, and M1102 trailers or a M102 howitzer is not authorized.
- When towing a trailer, the maximum safe slope is reduced from 40% to 30%.

All vehicles are capable of towing M116 Series and M101 Series trailers and the M102 Howitzer. The M998 Series and A1 Series have a maximum towed load capacity of 3,400 lb. The Heavy Variant (M1097, M1097A1, M1097A2 and M1123) and A2 Series have a maximum towed load capacity of 4,200 lb.

Only vehicles that have been retrofitted with MWO 9-2320-280-20-6 Airlift Bumper Reinforcement, or MWO 9-2320-280-20-7 Crossmember Reinforcement, are authorized to tow M1101 and M1102 trailers. Due to the numerous model differences, you must refer to Table 2-3.1 to determine towing authorization for the M1101 and M1102.

The ambulances are authorized to tow trailers only during administrative or tactical moves, when not transporting patients.

Trailer payloads should be evenly distributed to prevent excessive tongue loads.

Table 2-3.1. Vehicle Trailer Towing Requirements

HMMWV Model Number	Description	MWO Requirements				Remarks
		M1101	M1102	<3400 lb (1544 kg)	<4200 lb (1905 kg)	
M998/M998A1	Cargo/Troop	A		A		
M1038/M1038A1	Cargo/Troop	A		A		
M1097/M1097A1/M1097A2	Heavy Variant	B	B	B	B	
M1123	Heavy Variant	C	C	C	C	
M966/M966A1	Tow Carrier	A		A		
M1121	Tow Carrier	A		A		
M1036	Tow Carrier	A		A		
M1045/M1045A1	Tow Carrier	A		A		
M1045A2	Tow Carrier	C	C	C	C	
M1046/M1046A1	Tow Carrier	A		A		
M1025/M1025A1	Armament Carrier	A		A		
M1025A2	Armament Carrier	B	B	B	B	
M1026/M1026A1	Armament Carrier	A		A		
M1043/1043A1	Armament Carrier	A		A		
M1043A2	Armament Carrier	C	C	C	C	
M1044/M1044A1	Armament Carrier	A		A		
M1037	Shelter Carrier	B1		B1		See Note
M1042	Shelter Carrier	B1		B1		
M996/M996A1	Ambulance	B1		B1		
M997/M997A1	Ambulance	B1		B1		
M997A2	Ambulance	B	B	B	B	
M1035/M1035A1	Ambulance	A			A	
M1035A2	Ambulance	B	B	B	B	

Key:

A = MWO 9-2320-280-20-7

B = MWO 9-2320-280-20-6

B1 = Need MWO 9-2320-280-20-6 but must change stencil to read 3400 lb (1544 kg) instead of 4200 lb (1907 kg).

C = Comes equipped. No MWO required.

<3400 lb (1544 kg) = Any system mounted on HMT Chassis with GVW of 3400 lb (1544 kg) or less.

<4200 lb (1907 kg) = Any system mounted on HMT Chassis with GVW of 4200 lb (1907 kg) or less.

Note: Pintle extensions are required on vehicles with Shelter Standardized Integrated Command Post System (SICPS) type II. If vehicle is equipped with SICPS (M788) mounted, MWO 9-2320-280-20-6 is not required.

2-26. ELECTRIC WINCH OPERATION

a. General. The vehicle electrical system is used to power the winch. It is recommended to have engine running while operating the winch so the alternator recharges the battery. Increased engine rpms can be maintained by use of the hand throttle. When engaging or disengaging the clutch, it may be necessary to rotate the drum by hand to align gears.

b. Preparation for Use.

NOTE

The eye of the winch cable needs a thimble to keep wires from shearing or breaking. Refer to unit maintenance for installation.

(1) Park vehicle directly facing object to be winched. Place transmission shift lever in "N" (neutral), or "P" (Park) for M1123 and A2 vehicles.

(2) Apply parking brake.

(3) Start engine (para. 2-10).

(4) Chock wheels.

c. Unwinding Winch Cable.

CAUTION

Do not power out winch cable for more than 10 ft (3 m). Use free spool for paying out long lengths of winch cable. Failure to free spool long lengths of winch cable will cause damage to winch.

(1) Turn clutch lever (1) counterclockwise to "FREE SPOOL."

WARNING

- Wear leather gloves when handling winch cable. Do not handle cable with bare hands.
- When fully extending winch cable, ensure that four wraps of winch cable remain on drum at all times. Failure to do this may cause injury or death to personnel.

NOTE

Allow 1 ft (30.5 cm) of slack in winch cable prior to start of winching operations. This allows time for winch motor start-up for maximum pulling power.

(2) Pull out cable (5) by hand to desired length. Connect to load leaving 1 ft (30.5 cm) of slack in cable (5).

d. Pulling Load.

NOTE

Refer to table 1-16 (6,000 lb), or table 1-17 (Optional 9,000 lb), Winch Data, for pulling load capacity.

(1) Remove remote control switch (3) from stowage box (4).

(2) Turn clutch lever (1) clockwise to "ENGAGED."

WARNING

Direct all personnel to stand clear of winch cable during winch operation. A snapped winch cable will cause injury or death.

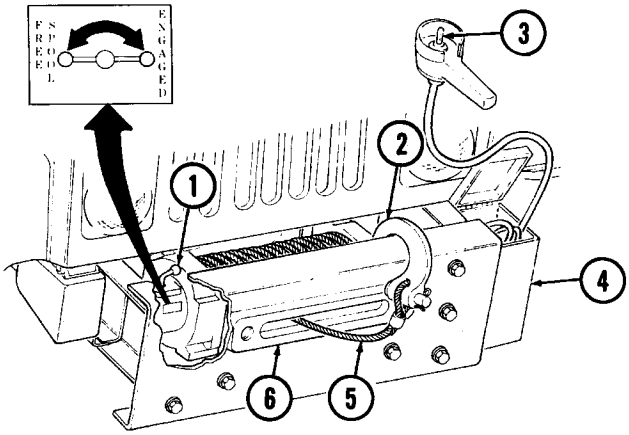

NOTE

- The electric winch is equipped with an electronic current limiter switch to prevent winch overload. If winch stops repeatedly during operation and restarts in approximately five seconds, the electronic current limiter is being activated, indicating an overload condition.
- The electric winch is equipped with a thermal cutoff switch to prevent winch from overheating. If winch stops during operation, and does not restart within five seconds, wait approximately two minutes to let winch cool off and allow thermal switch to reset. If after five minutes winch is still inoperative, notify unit maintenance.

CAUTION

Do not fully apply hand throttle during engine "NO LOAD" condition. Damage to engine may result.

(3) Pull out hand throttle until desired engine speed is obtained.

(4) Operate remote control switch (3) to "IN" or "OUT" until load has been retrieved.

e. Securing Winch After Operation.

CAUTION

Winch cable must be wound onto the drum under a load of at least 500 lbs (227 kg) or outer wraps will draw into the inner wraps and damage winch cable.

(1) Wind winch cable (5) until hook (2) is 4 ft (1.2 m) from cable guide (6).

(2) Turn clutch lever (1) counterclockwise to "FREE SPOOL" and rotate drum by hand to retrieve the remaining cable.

(3) Place remote control switch (3) in stowage box (4).

(4) Turn clutch lever (1) clockwise to "ENGAGED."

(5) Release hand throttle.

2-26.1. HYDRAULIC WINCH OPERATION

a. General. The vehicle power steering pump is used to power the winch. The engine must be running while operating the winch. However if the engine will not run, the winch cable may be payed out by moving the levers to FREE SPOOL wheel position, then paying out cable down to the fifth layer. Then move levers to LOCK position, keeping no less than five full wraps of cable on the winch drum. When engaging or disengaging HIGH and LOW range, it will be necessary to rotate the drum by hand to align gears. This may also be done by powering the winch in and out with no load on cable 1/2 second at a time until full engagement is achieved.

b. Preparation for Use.

NOTE

The eye of the winch cable needs a thimble to keep wires from shearing or breaking. Refer to unit maintenance for installation.

(1) Park vehicle directly facing object to be winched. Place transmission shift lever in “N” (neutral), or “P” (Park) for M1123 and A2 vehicles.

(2) Apply parking brake.

(3) Chock wheels.

(4) Start engine (para. 2-10).

c. Unwinding Winch Cable.

CAUTION

Do not power out winch cable for more than 10 ft (3 m). Use free spool for paying out long lengths of winch cable. Failure to free spool long lengths of winch cable will cause damage to winch.

(1) Move clutch levers (1) and (2) to “FREE.”

WARNING

- Wear leather gloves when handling winch cable. Do not handle cable with bare hands.
- When fully extending winch cable, ensure that five wraps of winch cable remain on drum at all times. Failure to do this may cause injury or death to personnel.

NOTE

Allow 1 ft (30.5 cm) of slack in winch cable prior to start of winching operations. This allows time for winch motor start up for maximum pulling power.

(2) Pull cable (3) by hand to desired length. Connect to load, leaving 1 ft (30.5 cm) of slack in cable (3).

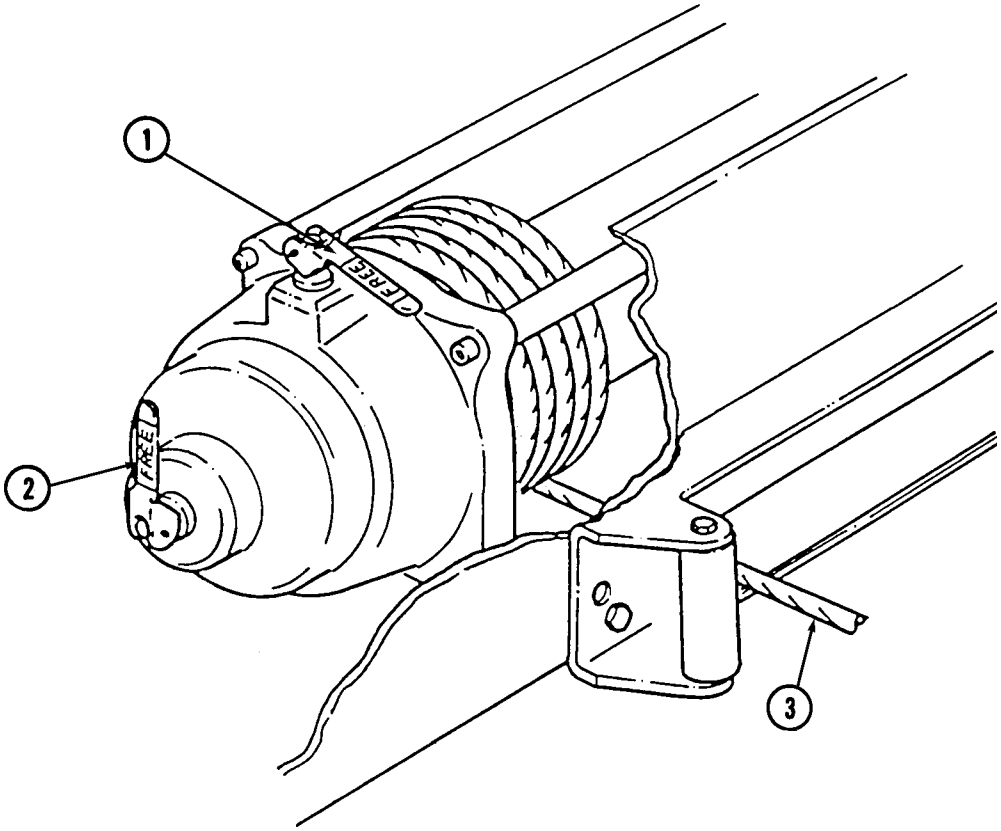
1
2
3
FREE
FREE

d. Pulling Load.

NOTE

Refer to table 1-17.1. (Optional 10,500 lb), Winch Data, for pulling capacity.

(1) Remove remote control switch (5) from stowage box (6) and cap (9) from controller plug (7) and connect hand controller connector (8) to controller plug (7).

(2) Move clutch lever 1 (1) to "LOW" position and leave clutch lever 2 (4) at "FREE" position to place winch (2) in "LOW" range.

WARNING

Direct all personnel to stand clear of winch cable during winch operation. A snapped winch cable may cause injury or death.

CAUTION

Do not move winch levers with load on winch or when powering winch in or out.

(3) Press "OUT" remote control button (10) or "IN" remote control button (11) until load has been retrieved.

e. Securing Winch After Operation.

CAUTION

Winch cable must be wound onto the drum under a load of at least 500 lbs (227 kg), or outer wraps will draw into the inner wraps and damage winch cable.

(1) Wind winch cable (2) until hook is 4 ft (1.2 m) from cable guide (12).

(2) Move clutch levers 1 (1) and 2 (4) to "FREE" positions and rotate drum by hand to retrieve the remaining cable.

(3) Remove hand controller connector (8) from controller plug (7) and place remote control switch (5) in stowage box (6).

(4) Move clutch lever 1 (1) to "LOW" position and clutch lever 2 (4) to "HIGH" position to lockup winch (3).

(5) Install cap (9) on controller plug (7).

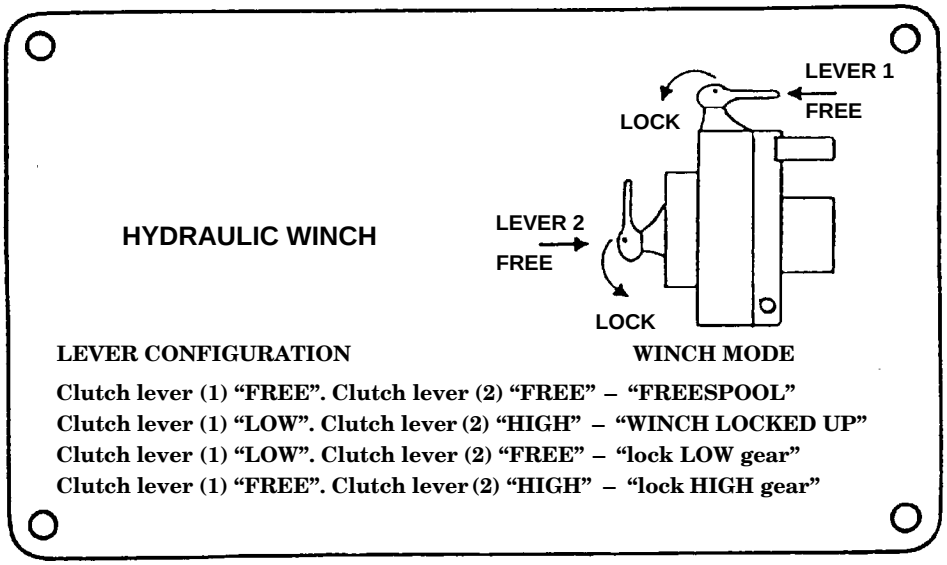

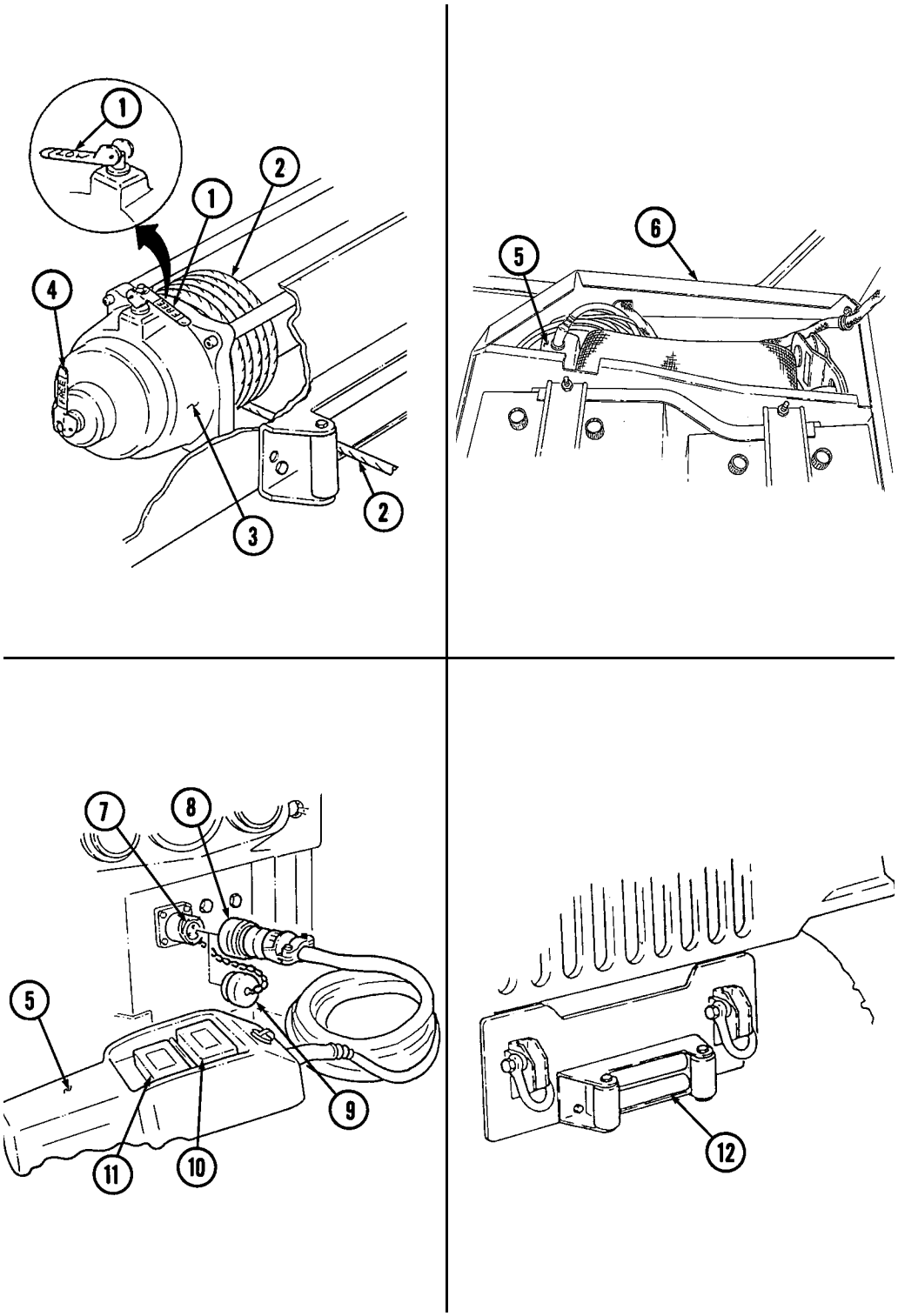
1
1
2
4
3
2
5
6
7
8
5
9
11
10
12

2-27. MALFUNCTION

a. Before Operation.

(1) Ensure operator PMCS have been accomplished and needle of indicator gauge (1) is in the green zone. Refer to table 2-2.

(2) Refer to para. 2-2 for fire extinguisher stowage location.

WARNING

- Avoid using fire extinguisher in unventilated areas. Prolonged inhalation exposure to extinguishing agent or fumes from burning materials may cause injury to personnel.
- Using fire extinguisher in windy areas will cause rapid dispersal of extinguishing agent and reduce effectiveness in fire control.

b. During Operation.

(1) To operate fire extinguisher (4), remove from stowage bracket (5). Remove locking pin (2) and direct nozzle (6) to source of flames.

(2) Squeeze handles (3) together and direct extinguishing agent to base of flames. To extinguish burning liquid in a container, direct extinguishing agent against inside of container, just above burning liquid.

c. After Operation.

(1) Stow fire extinguisher (4) in stowage bracket (5).

(2) Notify unit maintenance to replace or recharge fire extinguisher (4) after use.

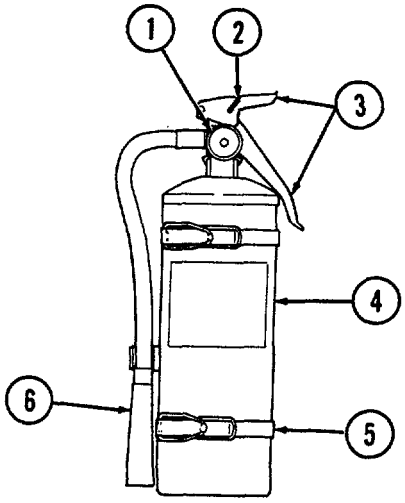

Section IV. OPERATION UNDER UNUSUAL CONDITIONS

2-28. SPECIAL INSTRUCTIONS

a. General. Special instructions for operating and maintaining vehicles under unusual conditions are included in this section. Unusual conditions are extreme temperatures, humidity, and/or terrain. Special care in cleaning and lubrication must be taken in order to keep vehicles operational when operating under unusual conditions.

WARNING

This vehicle has been designed to operate safely and efficiently within the limits specified in this TM. Operation beyond these limits is prohibited IAW AR 750-1 without written approval from the Commander, U.S. Army Tank-automotive and Armaments Command, ATTN: AMSTA-CM-S, Warren, MI 48397-5000.

NOTE

Except where noted, all normal operating procedures will apply in addition to special instructions for unusual operating conditions.

b. Cleaning. Refer to para. 2-4 for cleaning instructions and precautions.

c. Lubrication. Refer to appendix G for proper lubricating instructions.

d. Driving Instructions.

(1) FM 21-305, Manual for the Wheeled Vehicle Driver, contains special driving instructions for operating wheeled vehicles.

(2) FM 55-30, Army Motor Transport Unit Operations, contains instructions on driver selection, training, and supervision.

(3) FM 9-207, Operation and Maintenance of Ordnance Materiel in Cold Weather, contains instructions on vehicle operation in extreme cold of 0°F to -65°F (-18°C to -54°C).

(4) Other documents with information on vehicle operation under unusual conditions are:

(a) FM 31-70 Basic Cold Weather Manual
(b) FM 31-71 Northern Operations
(c) FM 90-3 Desert Operations
(d) FM 90-5 Jungle Operations
(e) FM 90-6 Mountain Operations

e. Special Purpose Kits. Paragraphs describing special purpose kits for operation under unusual conditions are:

(1) Deep water fording operation, para. 2-37.

(2) Arctic operation, para. 2-39 or 2-40.

f. Transmission Range Selection. For proper transmission range selection, refer to table 1-7 or table 1-8. If transmission range selection is peculiar to an unusual operating condition, it will be specified in the applicable paragraph.

g. Transfer Case Range Selection.

CAUTION

- Vehicle must be stopped, engine off, and transmission shift lever in “N” (neutral) before transfer case can be shifted. Failure to do this will result in damage to drivetrain.
- Damage to drivetrain will result if transfer case is operated in “L” (low range) or “H/L” (high lock range) on high traction surfaces with no wheel slippage.

CAUTION

- When necessary to temporarily operate transfer case in “H/L" (high lock range) or “L" (low range) when additional traction is needed to prevent wheel slippage, avoid sharp continuous turns. Failure to avoid sharp continuous turns while operating transfer case in locked ranges may cause damage to drivetrain.
- Immediately after operation in “H/L" (high lock range) or “L" (low range), ensure transfer case is shifted to “H” (high range) to avoid damage to drivetrain. If any noises from drivetrain components are heard, ensure that transfer case range is properly selected.

For proper transfer case range selection, refer to table 1-9. If transfer case range selection is peculiar to an unusual operating condition, it will be specified in the applicable paragraph.

2-29. OPERATING ON UNUSUAL TERRAIN

a. General Rules. Driving off-road over rough or unusual terrain basically requires using good driving sense. Experience is the best teacher, but there are a few good rules to keep in mind when you are in that kind of driving situation.

WARNING

- Use extreme caution when transporting personnel. Rollover protection is available for the crew area only and is not provided in the troop/cargo area. Although certain design characteristics of the vehicle, such as vehicle width, ground clearance, independent suspension, etc., provide improved capabilities, accidents can still happen.
- Operators are reminded to observe basic safe driving techniques/skills when operating the vehicle, especially when transporting personnel. Vehicle speed must be reduced consistent with weather and road/terrain conditions. Obstacles such as stumps and boulders must be avoided. Failure to use basic safe driving techniques/skills may result in injury or death to personnel and damage to equipment.

(1) Use “H/L” (high lock range) or “L” (low range) only when absolutely required by the conditions identified in table 1-9. After operations on unusual terrain, be sure to shift the transfer case from “H/L" (high lock range) or "L" (low range) to “H” (high range) to avoid damaging drivetrain components.

(2) Select proper transmission and transfer case driving ranges. Refer to table 1-7 or table 1-8 for transmission range selections. For transfer case range selections, refer to table 1-9.

(3) Keep engine at a moderate speed. The engine works at its best pace in the mid-range revolutions per minute (rpms). You can slow down or speed up quickly without changing gears if you get into a tight spot. Use the transmission shift lever and transfer case shift lever to control the engine speed.

(4) Attempt to keep wheels from spinning. If the wheels start to spin, ease off the accelerator pedal until the wheels regain traction.

(5) The instructions for placing vehicle in motion (para. 2-11) also apply to operating on unusual terrain.

b. Unusual Terrain Driving Techniques

CAUTION

- Do not shift into any lower gear than is necessary to maintain headway. Attempt to maintain a constant engine speed. Over-revving engine will cause the wheels to slip, and traction will be lost.
- Before ascending or descending steep hills, stop vehicle, place transmission to "N" (neutral), and shift transfer case to "L" (low range). Failure to shift transfer case to "L" (low range) before ascending or descending steep hills may result in damage to drivetrain.

(1) Before climbing a steep hill, shift the transfer case into "L" (low range) and the automatic transmission into "1" (first). If wheels start to slip, "walk" the vehicle the last few remaining feet of a hill by swinging the front wheels sharply left and right if situation permits. This action will provide fresh "bite" into the surface and will usually result in enough traction to complete the climb.

CAUTION

When "L" (low range) is used for "engine braking" while descending steep grades, avoid sharp continuous turns. Failure to avoid sharp continuous turns while operating transfer case in range may cause damage to drivetrain.

(2) You can proceed safely down a steep grade by shifting the transfer case into "L" (low range) and the transmission into "2" (second) or "1" (first). Let the vehicle go slowly down the hill with all four wheels turning against engine compression.

WARNING

Do not travel diagonally across a hill unless it is absolutely necessary, or injury to personnel or damage to equipment may result.

(3) When moving across a slope, choose the least angle possible, keep moving, and avoid turning quickly.

(4) If it is difficult to shift out of a locked range, drivetrain torque buildup may have occured. If necessary to relieve drivetrain torque buildup when leaving a low traction surface for a high traction surface, the vehicle should be backed up for a distance of approximately 5 ft (1.5 m) before proceeding.

2-30. COLD WEATHER STARTING BELOW +32°F (0°C)

WARNING

Starting aids will not be used on the engine. Use of starting aids will cause damage to vehicle, injury, or death.

(1) Start engine (para. 2-10).

WARNING

- Do not use the hand throttle as an automatic speed or cruise control. The hand throttle does not automatically disengage when brake is applied, resulting in increased stopping distances and possible hazardous and unsafe operation.
- Do not fully apply hand throttle when engine is not under load.

NOTE

If engine cranks slowly and voltmeter indicates low battery charge level, attempt to slave start vehicle (para. 2-23). If vehicle still will not start, perform troubleshooting procedures in table 3-1.

(2) After engine starts, pull out hand throttle until desired engine speed is obtained. Twist handle to lock hand throttle.

(3) Allow engine to warm up at an increased speed for approximately three minutes.

(4) After warm-up period, unlock hand throttle and push hand throttle in and allow engine speed to decrease.

2-31. OPERATING IN EXTREME COLD, ON ICE, OR SNOW

a. Before Operation.

(1) Operate arctic winterization equipment (para. 2-39 or 2-40).

(2) Scrape off any ice accumulated on vehicle.

(3) Remove ice and snow from area around air cleaner intake cap.

(4) Refer to para. 2-30 for cold weather starting instructions.

(5) Refer to para. 2-29 for techniques that can be used when operating on unusual terrain.

(6) Refer to para. 3-22 for tire chain installation and operation.

(7) Operate troop/cargo winterization heater, if applicable (para. 2-41).

b. During Operation.

WARNING

- Vehicle operation in snow is a hazardous condition. Operator must travel at reduced speeds and be prepared to meet sudden changes in road conditions. Failure to maintain safe stopping distances will cause damage to vehicle and injury or death to personnel.
- Pump brakes gradually when stopping vehicle on ice or snow. Sudden braking will cause wheels to lock and vehicle to slide out of control, causing damage to vehicle and injury or death to personnel.
- Chock blocks shall be used when parking a vehicle in extreme cold conditions. Failure to do so may result in injury to personnel or damage to equipment.

NOTE

Keep area around air cleaner intake cap clear of snow and ice. Snow and ice may melt, refreeze, and cause restriction in air intake system. If necessary, remove intake cap and clear ice and snow without damaging intake cap screen. Hold the cap near the vehicle exhaust to quickly melt ice without damaging screen.

(1) Place transmission shift lever in “D” (drive) (or “Ⓓ” overdrive for M1123 and A2 vehicles), and transfer case shift lever in “H/L” (high lock range). Place vehicle in motion slowly to prevent wheels from spinning.

NOTE

If additional power is needed to extract vehicle when mired in snow, place transmission in “1” (first) and transfer case in “L” (low range). After vehicle is extracted from mired condition, immediately return transfer case to “H/L” (high lock range) position.

(2) If rear skidding occurs:

(a) Let up on accelerator pedal.

(b) Turn steering wheel in direction of skid until control has been regained.

(c) Apply brake pedal in a gradual pumping manner.

c. After Operation.

(1) Remove all ice and snow from underside of vehicle and fuel tank filler cap.

(2) Drain fuel filter (para. 3-10).

2-32. OPERATING IN DUSTY, SANDY AREAS

a. General. Vehicles operating in dusty or sandy areas require frequent servicing of the air filter and cooling system.

NOTE

For dusty conditions, a precleaner, NSN 2940-01-302-8028, can be inserted in the air intake shield assembly, at the discretion of the unit commander.

b. Before Operation.

(1) Reduce tire inflation to 12 psi (83 kPa) front and 16 psi (110 kPa) rear to increase traction when operating in sand.

(2) When operating in loose sand or soft ground, place transfer case shift lever in "H/L" (high lock range) position and transmission shift lever in "D" (drive) (or " Ⓓ " (overdrive) for M1123 and A2 vehicles).

(3) Refer to paragraph 2-29 for techniques that can be used when operating on unusual terrain.

c. During Operation.

NOTE

If additional power is needed to extract vehicle when mired in sand, place transmission in "1" (first) and transfer case in "L" (low range). After vehicle is extracted from mired condition, immediately return transfer case to "H/L" (high lock range) position.

(1) Frequently check air restriction gauge. If indicator shows red, park vehicle, stop engine, and refer to para. 3-15 for emergency air cleaner servicing.

(2) If engine overheating occurs:

(a) Park vehicle, allow engine to idle.

(b) Observe coolant temperature gauge for steady cooling.

CAUTION

Stop engine if coolant temperature gauge suddenly increases beyond approximately 230°F (110°C). Failure to comply will result in damage to engine.

(c) If coolant temperature continues to increase or does not lower, stop engine. Perform applicable troubleshooting procedures in table 3-1.

(3) Accelerate slowly so wheels will not spin and dig into sand.

CAUTION

Use a wrecker or second vehicle equipped with winch to recover vehicles mired in deep sand. Do not attempt to "rock" vehicles out of deep sand with quick transmission shift changes. Damage to transmission will occur.

d. After Operation.

(1) At end of daily operation, remove all sand from accelerator linkage and brake components.

(2) Park vehicle in shade whenever possible to protect tires, soft tops, paint, wood, and seals from sun, dust, and sand.

(3) If shade is not available, cover vehicle with tarpaulin. When entire vehicle cannot be covered, protect windows and hood with tarpaulin to prevent entry of sand or dust.

(4) Vehicles completing operation in dusty, sandy areas must be lubricated and serviced by unit maintenance as soon as possible.

2-33. OPERATING IN MUD

a. Before Operation.

(1) Before operating in mud, place transfer case shift lever in "H/L" (high lock range) and transmission shift lever in "D" (drive) (or "(D)" (overdrive) for M1123 and A2 vehicles).

(2) Refer to paragraph 2-29 for techniques that can be used when operating on unusual terrain.

b. During Operation.

CAUTION

- Do not repeatedly shift transmission or overspeed the engine during operation in deep mud. Damage to drivetrain may result.
- Use wrecker or a second vehicle equipped with winch to recover vehicles mired in deep mud. Do not attempt to "rock" vehicles out of deep mud with quick transmission shift changes. Damage to transmission will occur.

NOTE

If additional power is needed to extract vehicle when mired in mud, place transmission in "1" (first) and transfer case in "L" (low range). After vehicle is extracted from mired condition, immediately return transfer case to "H/L" (high lock range) position.

Skidding and sudden loss of steering control are operating problems in mud. When rear end skidding occurs, immediately turn wheel in direction of skid.

c. After Operation.

(1) Wash the following as soon as possible with low pressure water:

CAUTION

Do not allow water to enter air intake cap or air cleaner assembly. Damage to engine will occur.

(a) Radiator and oil cooler
(b) Propeller shaft U-joint and halfshafts
(c) Steering linkage and ball joints

WARNING

Do not rely on service brakes until they dry out. Keep applying brakes until uneven braking ceases. Failure to do this may cause damage to vehicle and injury or death to personnel.

(d) Brake rotors and pads (service)
(e) Brake rotors and pads (park)
(f) Parking brake linkage
(g) Service lights
(h) Transmission control linkage
(i) Accelerator control linkage
(j) Sway bar bushings
(k) Towing pintle
(l) Fuel filler cap
(m) Vehicle exterior
(n) Geared hubs
(o) Advance solenoid rocker arm and fuel injection pump

(2) Remove mud from air cleaner dump valve (para. 3-16).

(3) Remove mud from drain hole (1) on converter housing cover (2).

(4) Remove mud from battery box drain holes.

NOTE

To prevent parking brake linkage from binding, lithium grease should be used after operating in mud. Clean mud, grit, and debris from linkage. Apply lithium grease (Appendix D, Item 10.1) and move linkage back and forth to work into joints.

(5) Vehicles completing operation in deep mud must be lubricated and serviced by unit maintenance as soon as possible.

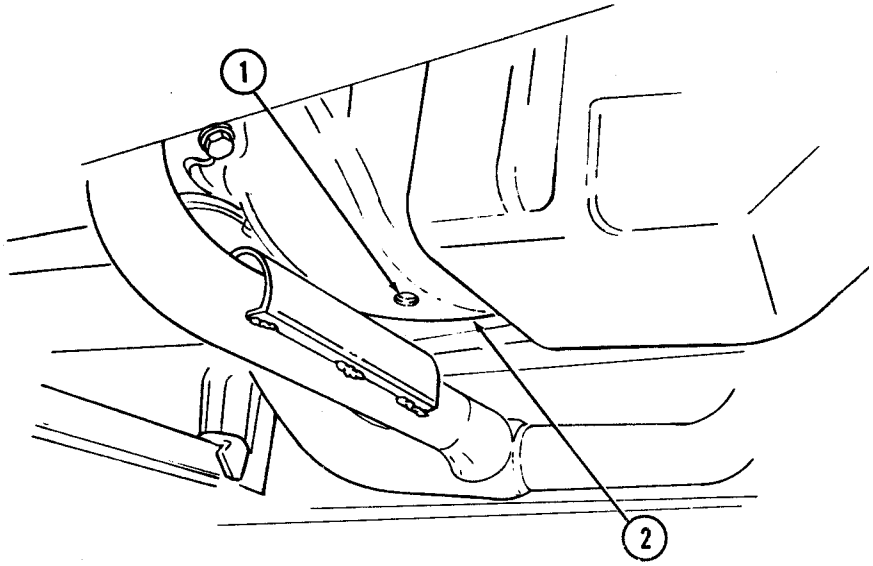

2-34. OPERATING IN EXTREME HEAT

a. General. Extreme heat exists when ambient temperatures reach 95°F (35°C) or more. The effect of extreme heat on vehicle engine is a decrease in engine efficiency.

b. Before Operation.

(1) Perform before operation checks and services in table 2-2.

(2) Check for foreign objects in front of radiator and clean as required.

(3) Check batteries more frequently. If electrolyte is low, add distilled water, refer to Appendix D, Item 27.

c. During Operation.

CAUTION

Avoid continuous vehicle operation at high speeds. Avoid long hard pulls on steep grades with transfer case shift lever in "L" (low range) position. Damage to transfer case will result.

(1) Frequently check coolant temperature gauge (2) and oil pressure gauge (1). Engine is overheating if one or more of the following conditions exist:

(a) Engine coolant temperature is more than approximately 230°F (110°C) as indicated by temperature gauge (2).

(b) Engine oil pressure drops below approximately 15 psi (103 kPa) with engine under a load.

(c) Engine oil pressure drops below approximately 6 psi (41 kPa) with engine at idle.

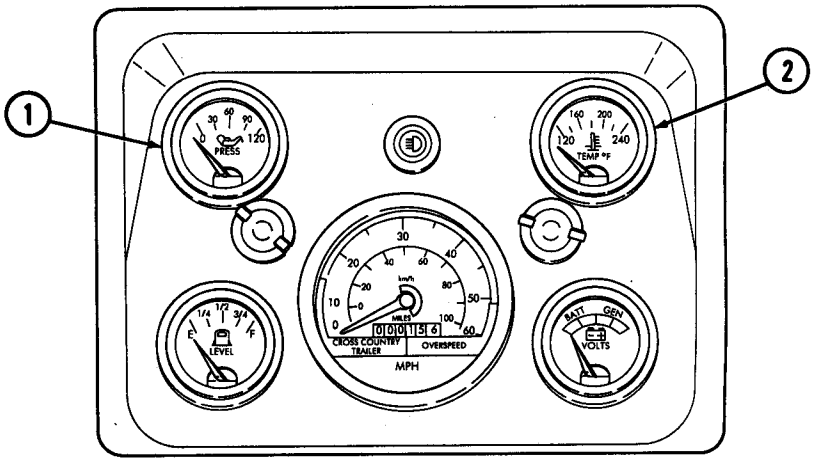

(2) If engine overheating occurs:

(a) Park vehicle, allowing engine to idle.

(b) Observe coolant temperature gauge (2) for steady cooling.

CAUTION

- Stop engine if coolant temperature gauge suddenly increases beyond approximately 230°F (110°C). Failure to comply will result in damage to engine.
- Notify unit maintenance to check differential, T-case, and transmission fluids for "oil breakdown" caused by overheating.

(c) If engine coolant temperature continues to increase or does not lower, stop engine. Perform troubleshooting procedures in table 3-1.

2-35. OPERATING IN RAINY OR HUMID CONDITIONS

a. General. Material inactive for long periods during rainy or humid conditions can rust rapidly. Fungus may develop in the fuel tanks as well as on soft tops, seats, and other components. Frequent inspections, cleaning, and lubrication are necessary to maintain the operational readiness of vehicles.

b. Before Operation. Fuel filter must be drained frequently because of high condensation in fuel system. To drain fuel filter, refer to paragraph 3-10.

c. During Operation.

(1) If necessary, place transfer case shift lever in “H/L” (high lock range) to obtain a start without spinning wheels.

(2) Do not spin wheels when placing vehicle in motion in heavy rain conditions.

(3) Refer to para. 2-29 for techniques that can be used when operating on unusual terrain.

2-36. SHALLOW WATER FORDING OPERATION

a. General. M998 series vehicles have a 30 in. (76 cm) shallow water fording capability without the use of a deep water fording kit.

CAUTION

Never attempt shallow water fording unless water depth is known to be 30 in. (76 cm) or less, and bottom is known to be hard. Do not exceed 5 mph (8 kph) during fording operation. Damage to vehicle will result.

b. Before Operation.

(1) Make sure oil dipstick, transmission dipstick, oil filler cap, and fuel tank cap are secure.

(2) Secure all loose objects on vehicle.

(3) Make sure battery caps are all present and tight.

WARNING

Do not allow tools to come in contact with vehicle when disconnecting or connecting slave receptacle cable. Tool contact with vehicle will result in a direct short, causing instant heating of tool, tool damage, and injury to personnel.

NOTE

Perform steps 4 through 6 only if fording in salt water.

(4) Disconnect battery ground cable (1).

NOTE

Battery positive cable must remain on power stud.

(5) Disconnect slave receptacle positive lead 49A (2) at power stud (3).

(6) Connect battery ground cable (1).

(7) Place transfer case shift lever in “H” (high range).

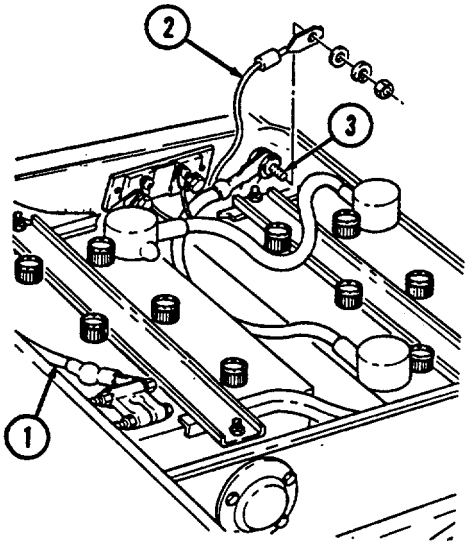

c. During Operation.

CAUTION

Entering water too fast will cause water to splash up over hood and into air intake. The engine may stop abruptly and will not crank. Do not continue starting efforts; damage to engine will result.

(1) Enter water slowly and maintain even vehicle speed while fording.
(2) Exit water in area with gentle slope.

NOTE

- Hydrostatic lock is caused by the entry of substantial amounts of water into the engine through the air intake system and subsequent contamination of the fuel system. Hydrostatic lock most frequently occurs during or just after fording. Water is forced into the air intake system, is drawn into the engine, and effectively "locks-up" the engine.
- Notify unit maintenance if you suspect hydrostatic lock and they will further test the engine.

d. After Operation.

WARNING

Do not rely on service brakes after fording until the brakes dry out. Keep applying brakes until uneven braking ceases. Failure to do this may cause damage to vehicle or injury or death to personnel.

NOTE

If accumulated water drains slowly through floor drain holes, refer to unit maintenance for drilling and improving drain holes

(1) If fording operation was through salt water, wash and wipe off all salt deposits as soon as possible.

NOTE

To prevent parking brake linkage from binding, lithium grease should be used after operating in mud. Clean mud, grit, and debris from linkage. Apply lithium grease (Appendix D, Item 10.1) and move linkage back and forth to work into joints.

(2) Vehicles completing shallow water fording operation must be lubricated and serviced by unit maintenance as soon as possible.

NOTE

Perform steps 3 through 7 only if fording was in salt water.

(3) Slide rubber boot (1) back and inspect slave receptacle (2) for evidence of corrosion, RTV wash out, or salt water penetration of RTV sealant. If any evidence of these conditions is found, report vehicle to unit maintenance for corrective action. Do not connect slave receptacle positive lead (4).

(4) If no evidence of corrosion, RTV wash out, or salt water penetration of the RTV sealant is found, slide rubber boot (1) on slave receptacle (2).

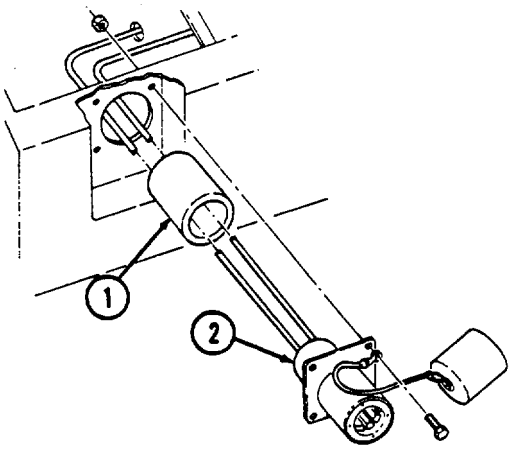

WARNING

Do not allow tools to come in contact with vehicle when disconnecting or connecting slave receptacle cable. Tool contact with vehicle will result in a direct short, causing instant heating of tool, tool damage, and injury to personnel.

(5) Disconnect battery ground cable (5).
(6) Connect slave receptacle positive lead 49A (4) at power stud (3).
(7) Connect battery ground cable (5).

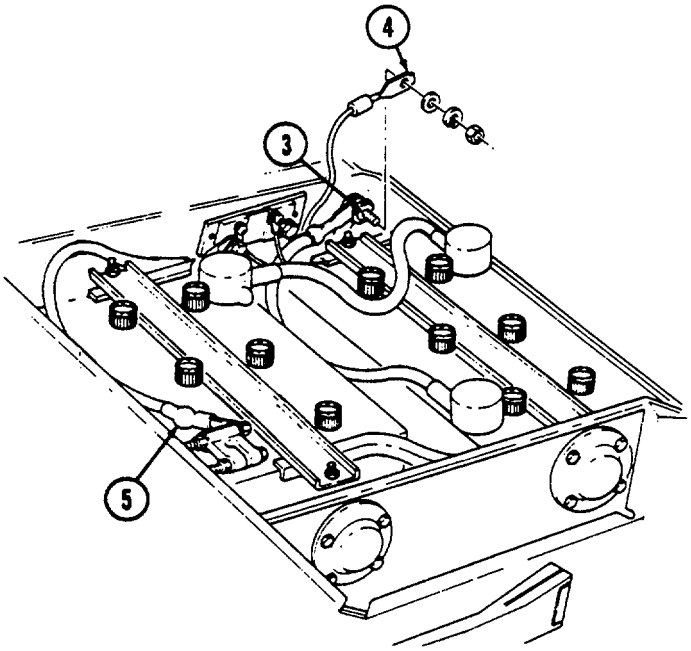

2-37. DEEP WATER FORDING OPERATION

a. General. The deep water fording kit allows M998 series vehicles to ford water up to 60 in. (152 cm) deep.

CAUTION

Never attempt deep water fording unless water depth is known to be 60 in. (152 cm) or less, and bottom is known to be hard. Do not exceed 5 mph (8 kph) during fording operation. Damage to vehicle will result.

b. Before Operation.

NOTE

Retain all parts removed for reuse.

(1) Raise and secure hood (para. 3-8).
(2) Loosen clamp (3) and remove weathercap (2) and clamp (3) from shield (12).
(3) Remove three capscrews (16), washers (15), and shield (12) from cowling (10). Stow shield (12).
(4) Install intake assembly vent tube (8) on air intake assembly (1) with two clips (14) and screws (13).
(5) Install air intake assembly (1) and clamp (9) into cowling (10) and tighten clamp (9).
(6) Connect fuel tank vent line (11) to intake assembly vent tube (8).
(7) Install air intake assembly (1) on windshield mounting bracket (6) with washer (5), capscrew (4), washer (5), and nut (7).
(8) Install clamp (3) and weathercap (2) on air intake assembly (1) and tighten clamp (3).
(9) Ensure that rubber cap (18) on the bottom of air cleaner body (17) is secure.

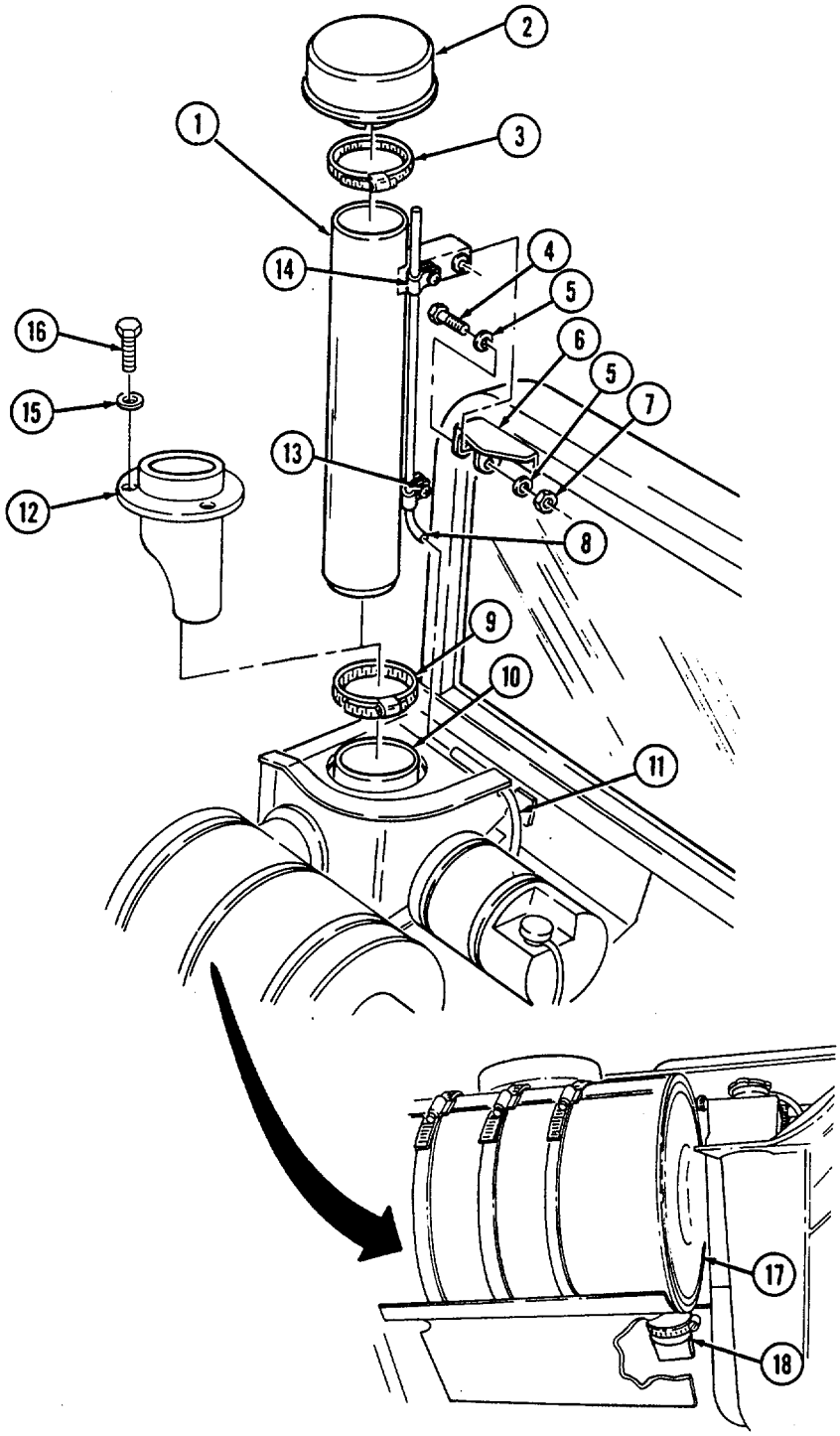
1
2
3
4
5
6
5
7
8
9
10
11
12
13
14
15
16
17
18

WARNING

Exhaust system components are hot after prolonged vehicle use. Ensure exhaust system components are cool before removing/ installing exhaust assembly. Failure to do this will result in injury to personnel.

NOTE

Any items removed for fording must be stowed for reuse.

(10) Remove three locknuts (17), washers (9), capscrews (10), and washers (9) securing tailpipe (11) to muffler (16).

(11) Remove two nuts (15), lockwashers (14), and U-bolt (12) securing tail-pipe (11) to clamp (13).

(12) Remove tailpipe (11) and gasket (8) from muffler (16).

(13) Install two rubber isolators (5) into wheelhouse (6). To ease installation, wet rubber isolators (5) with water.

(14) If isolators (5) cannot be installed easily, check alignment of holes in wheelhouse (6) and reinforcement bracket (3). To align holes, loosen capscrews (4) securing reinforcement bracket (3) to wheelhouse (6). Align holes in wheel-house (6) and reinforcement bracket (3) and tighten capscrews (4). Install
isolators (5).

(15) Install exhaust assembly (7) and gasket (8) on muffler (16) with three washers (9), capscrews (10), washers (9), and locknuts (17).

(16) Install exhaust assembly (7) on wheelhouse (6) with two washers (2) and locknuts (1).

(17) Ensure oil dipstick, transmission dipstick, oil filler cap, and fuel tank cap are secure.

(18) Secure all loose objects on vehicle.

(19) Ensure battery caps are all present and tight.

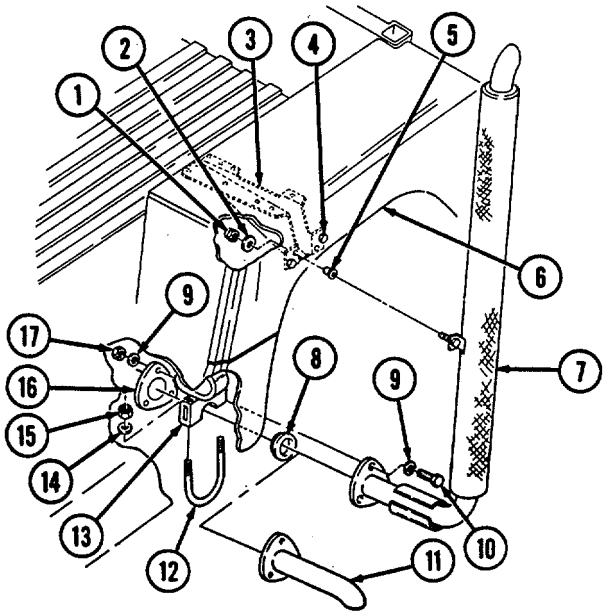

WARNING

Do not allow tools to come in contact with vehicle when disconnecting or connecting slave receptacle cable. Tool contact with vehicle will result in a direct short, causing instant heating of tool, tool damage, and injury to personnel.

NOTE

Perform steps 20 through 22 only if fording in salt water.

(20) Disconnect battery ground cable (20).

NOTE

Battery positive cable must remain on power stud.

(21) Disconnect slave receptacle positive lead 49A (19) at power stud (18).
(22) Connect battery ground cable (20).
(23) Place transfer case shift lever in appropriate range (table 1-9).
(24) Turn off all non-essential electrical loads (lights, fan, heater/defroster).
(25) Place fording selector switch (21) in “DEEP FORD" position prior to entering water.
(26) Pull out hand throttle (22) until desired engine speed is obtained. Twist hand throttle (22) to lock in position.
(27) Open driver and passenger windows.

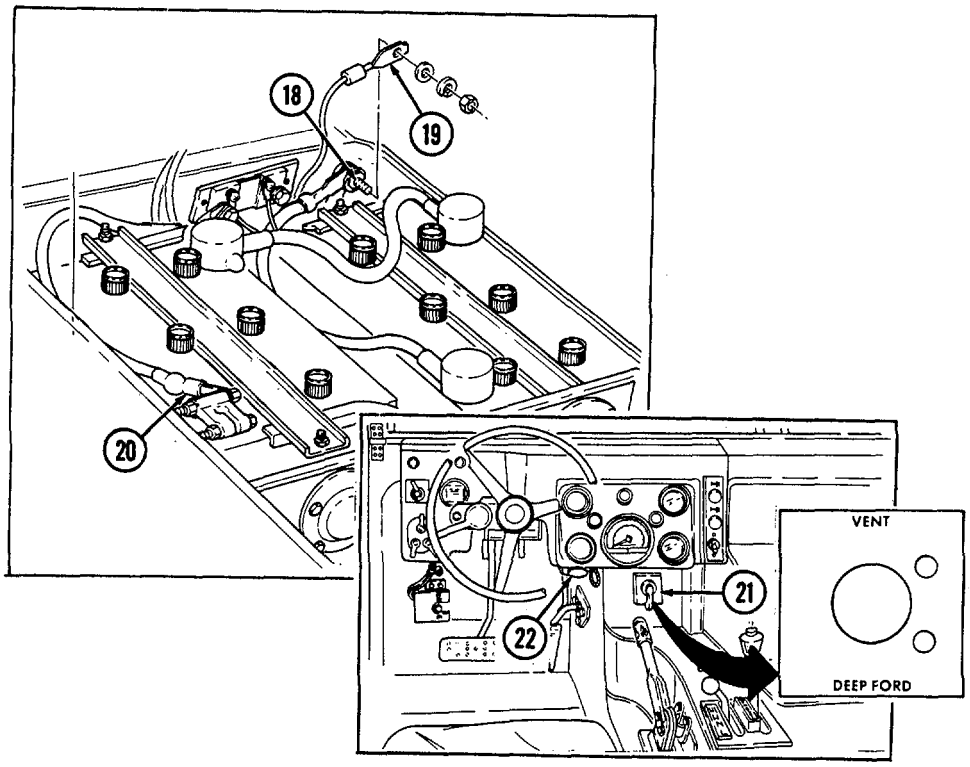

c. During Operation.

WARNING

Entering water too fast will cause water to splash up over hood and into air intake. The engine may stop abruptly and will not crank. Do not continue starting efforts; damage to engine will result.

NOTE

Perform step 1 for M996, M996A1, M997, M997A1, and M997A2 vehicles.

(1) Enter water until water level has reached the bottom of the driver and passenger windows, stop for a two minute waiting period to allow the ambulance body to fill with water, then proceed with operations.

(2) Enter water slowly and maintain even vehicle speed, 5 mph (8 kph) maximum.

(3) Exit water in area with gentle slope.

(4) Place fording selector switch (1) in "VENT" position upon leaving water.

WARNING

After fording do not use the hand throttle as an automatic speed or cruise control. The hand throttle does not automatically disengage when brake is applied, resulting in increased stopping distances and possible hazardous and unsafe operation. Injury to personnel or damage to equipment may result.

(5) Unlock and push in hand throttle (2).

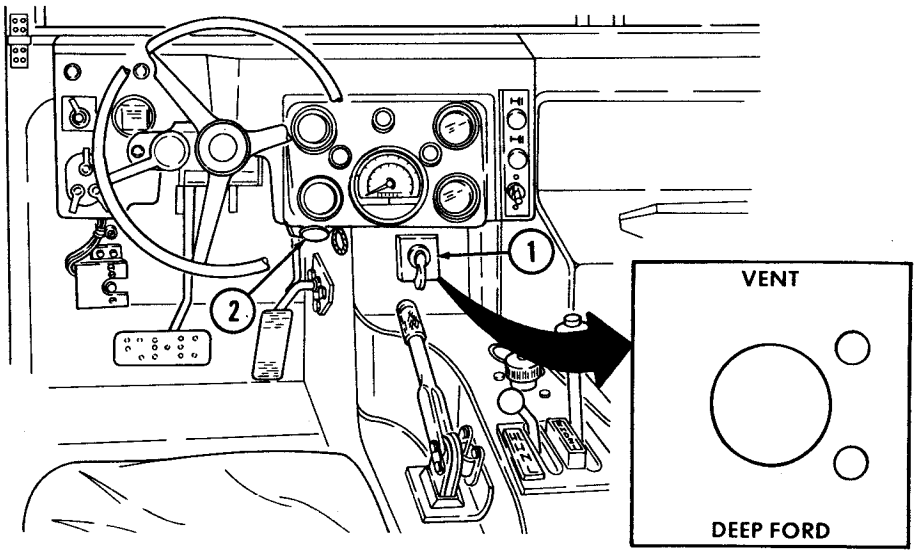

WARNING

Do not rely on service brakes after fording until the brakes dry out. Keep applying brakes until uneven braking ceases. Failure to do this may cause damage to vehicle, and injury or death to personnel.

(6) Place transfer case shift lever in desired range.

NOTE

- Hydrostatic lock is caused by the entry of substantial amounts of water into the engine through the air intake system and subsequent contamination of the fuel system. Hydrostatic lock most frequently occurs during or just after fording. Water is forced into the air intake system, drawn into the engine, and effectively "locks-up" the engine.
- Notify unit maintenance if you suspect hydrostatic lock, and they will further test the engine.

d. After Operation.

WARNING

Exhaust system components are hot after prolonged vehicle use. Ensure exhaust system components are cool before removing/ installing exhaust assembly. Failure to do this will result in injury to personnel.

(1) Stop engine.

NOTE

- Steps 2 through 13 are performed only if required.
- If accumulated water drains slowly through the holes, refer to unit maintenance for drilling and improving drain holes.

(2) Remove three locknuts (16), washers (8), capscrews (9), washers (8), gasket (7), and exhaust assembly (6) from muffler (15).

(3) Remove two locknuts (3), washers (4), and exhaust assembly (6) from wheelhouse (5).

(4) Install gasket (7) and tailpipe (10) on muffler (15) with three washers (8), capscrews (9), washers (8), and locknuts (16).

(5) Install clamp (12) on tailpipe (10) with U-bolt (11), two lockwashers (13), and nuts (14).

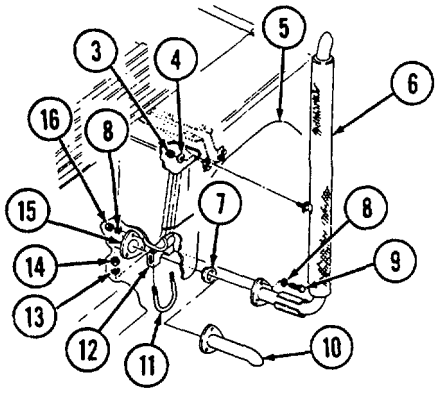

(6) Loosen clamp (2) securing weathercap (1) to air intake assembly (3) and remove weathercap (1).

(7) Remove nut (7), washer (5), capscrew (4), washer (5), and air intake assembly (3) from windshield mounting bracket (6).

(8) Disconnect fuel tank vent line (11) from intake assembly vent tube (8).

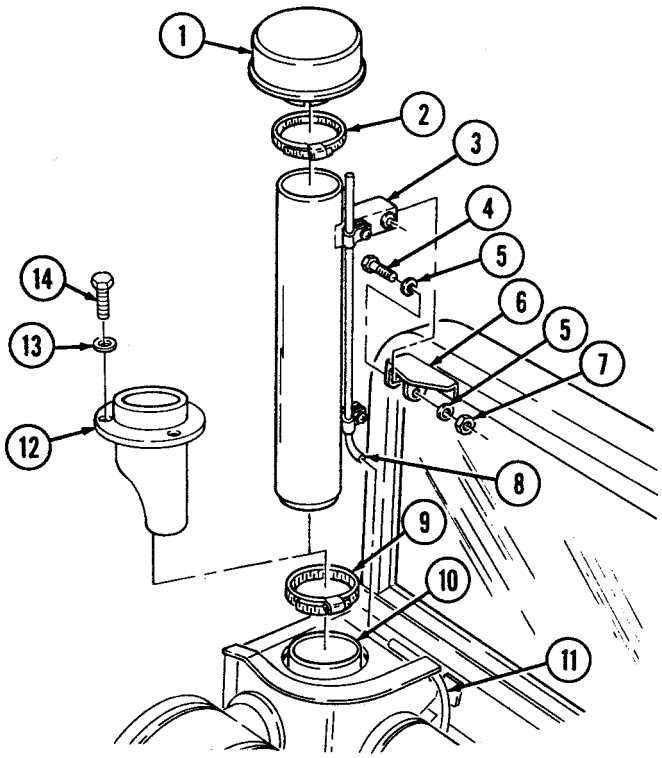

(9) Loosen clamp (9) securing air intake assembly (3) to cowling (10) and remove air intake assembly (3) and clamp (9).

(10) Install shield (12) in cowling (10) with three washers (13) and capscrews (14).

(11) Install weathercap (1) and clamp (2) on shield (12) and tighten clamp (2).

(12) Lower and secure hood (para. 3-8).

(13) Clean and stow intake and exhaust assembly components.

(14) If fording operation was through salt water, wash and wipe off all salt deposits as soon as possible.

NOTE

To prevent parking brake linkage from binding, lithium grease should be used after operating in mud. Clean mud, grit, and debris from linkage. Apply lithium grease (Appendix D, Item 10.1) and move linkage back and forth to work into joints.

(15) Vehicles completing deep water fording operation must be lubricated and serviced by unit maintenance as soon as possible.

NOTE

Perform steps 16 through 20 only if fording was in salt water.

(16) Slide rubber boot (15) back and inspect slave receptacle (16) for evidence of corrosion, RTV wash out, or salt water penetration of RTV sealant. If any evidence of these conditions is found, report vehicle to unit maintenance for corrective action. Do not connect slave receptacle positive lead (17).

(17) If no evidence of corrosion, RTV wash out, or salt water penetration of the RTV sealant is found, slide rubber boot (15) on slave receptacle (16).

WARNING

Do not allow tools to come in contact with vehicle when disconnecting or connecting slave receptacle cable. Tool contact with vehicle will result in a direct short, causing instant heating of tool, tool damage, and injury to personnel.

(18) Disconnect battery ground cable (18).

(19) Connect slave receptacle positive lead 49A (17) at power stud (19).

(20) Connect battery ground cable (18).

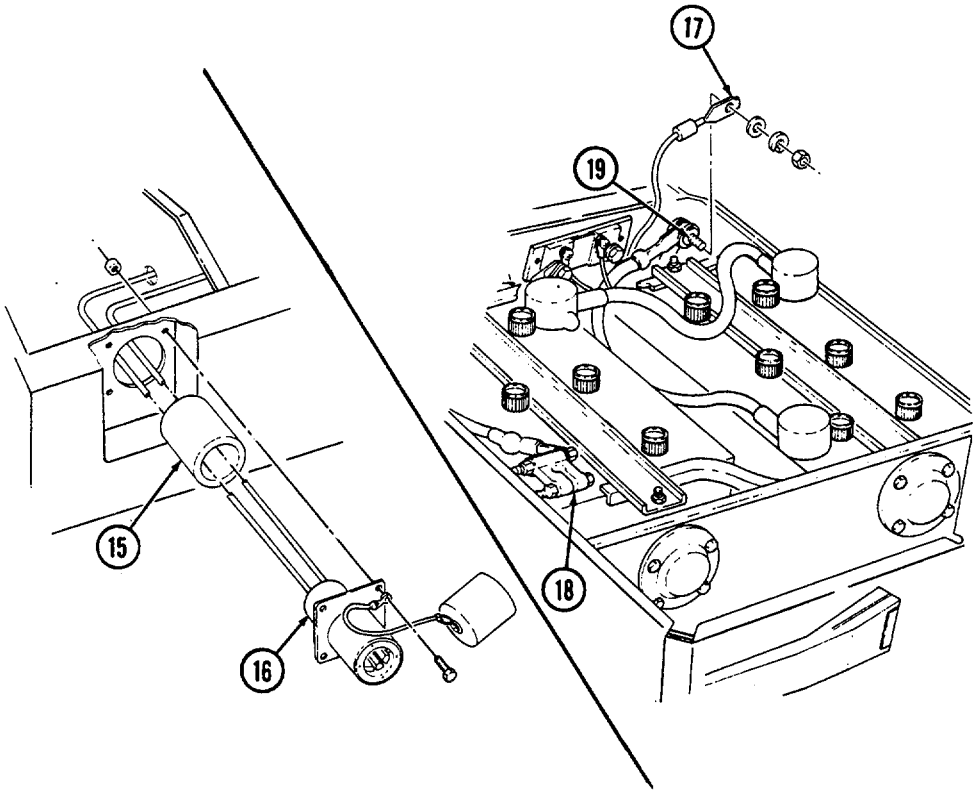

2-38. RUNFLAT OPERATIONS

M998 series vehicles are equipped with runflat devices, allowing the vehicle to be driven with one or more tires flat. For runflat operations, refer to table 2-4.

WARNING

- Do not exceed 30 mph (48 kph) during any runflat operation. Do not exceed 20 mph (32 kph) with both rear tires flat. Loss of vehicle control will occur, causing damage to equipment, injury or death to personnel.
- Speeds indicated in table 2-4 are maximum and must be reduced when traveling on secondary roads, cross-country, or with traffic present. Failure to reduce speeds could cause loss of control of vehicle, resulting in damage to equipment and injury or death to personnel.
- When driving your vehicle, the existing conditions are constantly changing. Never drive at a speed greater than is reasonable and prudent for these conditions. Loss of vehicle control will occur causing damage to equipment and injury or death to personnel.

CAUTION

- A wheel that has been run flat must be replaced and inspected by unit maintenance as soon as possible before reuse, or damage to equipment may result.
- Runflat operation may cause the tread to separate from the tire and/or wheel. If abnormal handling is experienced, or noise such as flapping or pounding around the wheel well occurs, the tread needs to be cut away from the wheel before continuing operation. Failure to do so could result in damage to the vehicle.

Table 2-4. Runflat Operation

NOTE
Runflat travel distance will improve with radial tire and rubber runflat. If additional travel is required, tire tread may be cut away from tire.

Combination of Flat Tires	Recommended Vehicle Speed	Distance
Two tires flat – rear	20 mph maximum (32 kph)	30 mi (48 km)
One tire flat – any location	30 mph (48 kph)	30 mi (48 km)
Two tires flat – same side	30 mph (48 kph)	30 mi (48 km)
Two tires flat – front only	30 mph (48 kph)	30 mi (48 km)

2-39. ARCTIC OPERATION (ALL EXCEPT M1123 AND A2 VEHICLES)

a. General. Arctic winterization kits are for use during extremely cold temperatures from 0°F (-18°C) to -50°F (-46°C).

CAUTION

- Do not operate arctic heater in ambient temperatures above 0°F (-18°C) or with temperature switch in “HI” position when temperature is above -25°F (-32°C). Damage to equipment may result.
- Close battery box door after 30 minutes of arctic heater operation or when engine is running. Failure to do so may result in damage to batteries.

b. Starting Arctic Heater.

(1) Set temperature switch (4) on heater control box (1) to "LO" position.

(2) Move start switch (3) on heater control box (1) to "START" position and hold for approximately 2 minutes or until heater starts and yellow indicator lamp (2) comes on.

NOTE

If the start switch is moved from the "START" to "ON" position too quickly, the heater flame will be extinguished and the heater will need restarting.

(3) When heater starts, move start switch (3) on heater control box (1) to "ON" position. If heater does not start, move start switch (3) to "OFF" position for 10 seconds and then back to "START" for 60 seconds. Repeat procedure if heater doesn't start.

c. Starting Engine With Arctic Heater Assistance.

(1) Push defroster control knob (9) all the way in to ensure hot air is not directed on windshield.

(2) Pull exhaust diverter cable knob (6) out to allow heater exhaust to heat the engine oil pan.

(3) Open battery box door (8), by sliding away from plenum (7), to heat batteries.

(4) Move regulator control lever (5) to "ARCTIC HEATER" position.

CAUTION

Do not operate arctic heater in ambient temperatures above 0°F (-18°C) or with temperature switch in "HI" position, when temperature is above -25°F (-32°C). Damage to equipment will result.

(5) Start arctic heater and set temperature switch (4) on heater control box (1) to "LO" position for temperatures from 0°F (-18°C) to -25°F (-32°C), or to "HI" position for temperatures from -25°F (-32°C) to -50°F (-46°C).

(6) Operate heater for 30 minutes maximum at -50°F (-46°C); less time may be required for higher ambient temperatures.

CAUTION

Close battery box door after 30 minutes of arctic heater operation or when engine is running. Failure to do so may result in damage to batteries.

(7) Close battery box door (8) by sliding toward plenum (7).

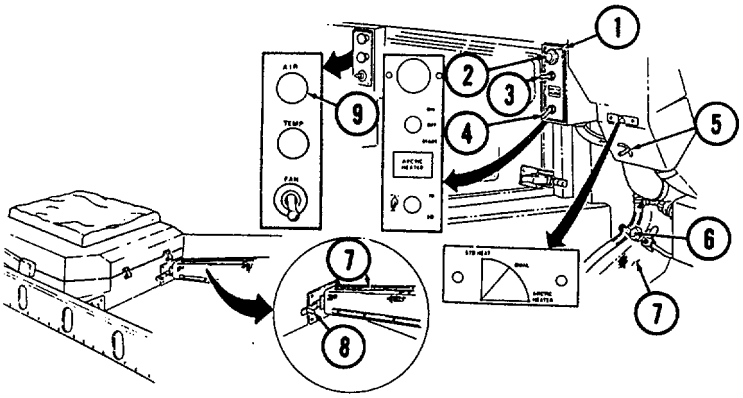

(8) Push exhaust diverter cable knob (5) in to shut off heat to engine oil pan.
(9) Start engine (para. 2-30).
(10) If engine fails to start, notify unit maintenance.

d. Stopping Arctic Heater.

Set start switch (2) on heater control box (1) to "OFF" position.

NOTE

The yellow indicator lamp will remain lit and the fan will continue to run until the heater has purged itself of fuel.

e. Defrosting Windshield in Ambient Temperatures Above -25°F (-32°C).

CAUTION

- Cab must be heated prior to defrosting, or damage to windshield will occur.
- Use of the arctic heater to defrost in temperatures above -25°F (-32°C) will damage the windshield.
- Do not operate arctic heater with regulator control lever in “STANDARD HEAT" position and battery box door closed, or damage to equipment will occur.

(1) Start engine with arctic heater assistance.
(2) Shut off arctic heater.
(3) Pull defrost control knob (8) all the way out to direct air on windshield.
(4) Pull temperature control knob (7) all the way out for maximum heat.
(5) Set regulator control lever (4) to "STANDARD HEAT" position.
(6) Set standard heater fan switch (6) to “HI" position until windshield is defrosted.

f. Defrosting Windshield in Ambient Temperatures from -25°F (-32°C) to 50°F (-46°C).

(1) Start engine with arctic heater assistance.
(2) Set temperature switch (3) on heater control box (1) to "LO” position.
(3) Set regulator control lever (4) to “DUAL” position.
(4) Pull defrost control knob (8) all the way out to direct air on windshield.
(5) Pull temperature control knob (7) all the way out for maximum heat.
(6) Set standard heater fan switch (6) to “LO" position until windshield is defrosted.

g. Heating Cab with Arctic Heater.

(1) Start engine (para. 2-30).

CAUTION

Do not operate arctic heater in ambient temperatures above 0°F (-18°C), or with temperature switch in "HI" position, when temperature is above -25°F (-32°C). Damage to equipment will result.

(2) Start arctic heater and set temperature switch (3) on heater control box (1) to "LO" position for temperatures from 0°F (-18°C) to -25°F (-32°C), or “HI" position for temperatures from -25°F (-32°C) to -50°F (-46°C).

(3) Set regulator control lever (4) to "DUAL" or "ARCTIC HEATER” position to achieve desired mix of air.

(4) Push defrost control knob (8) all the way in to direct airflow to heat ducts.

(5) Pull temperature control knob (7) all the way out for maximum heat.

(6) Set standard heater fan switch (6) to desired position to mix air.

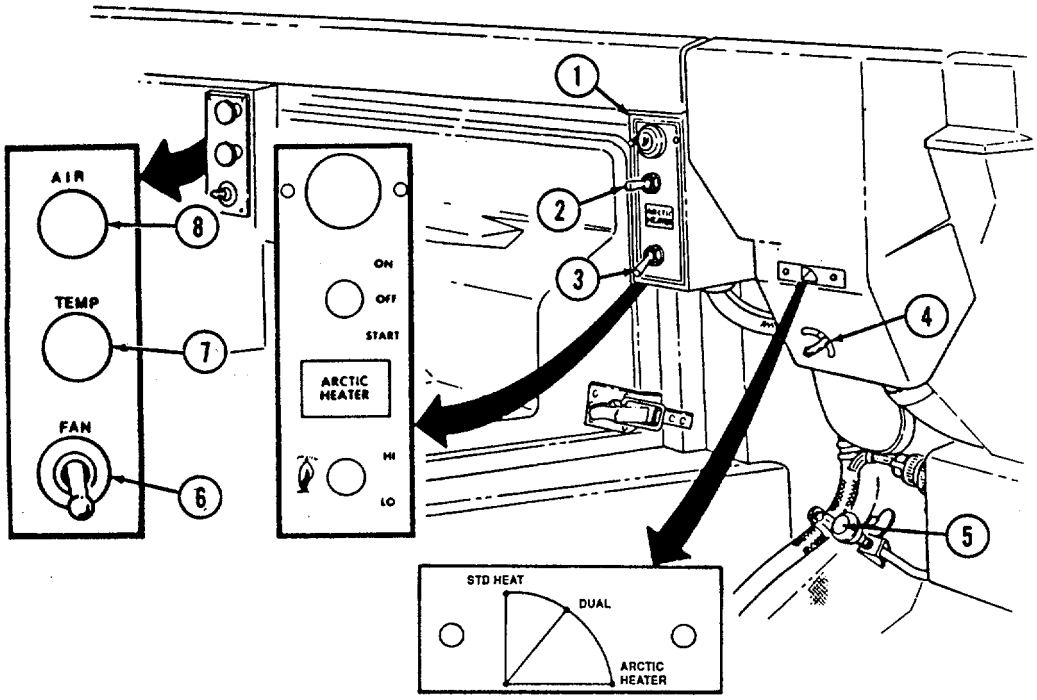

2-40. ARCTIC OPERATION (A2 VEHICLES)

a. General. Arctic winterization kits are for use during extremely cold temperatures from 0°F (-18°C) to -50°F (-46°C).

CAUTION

- Do not operate arctic heater in ambient temperatures above 0°F (-18°C), or with temperature switch in “HI” position, when temperature is above -25°F (-32°C). Damage to equipment may result.
- Close battery box door after 30 minutes of arctic heater operation or when engine is running. Failure to do so may result in damage to batteries.

b. Starting Arctic Heater.

(1) Set temperature switch (4) on heater control box (1) to “LO" position.

(2) Move start switch (3) on heater control box (1) to "START” position and hold for approximately 2 minutes or until heater starts and yellow indicator lamp (2) comes on.

NOTE

If the start switch is moved from the “START” to “ON" position too quickly, the heater flame will be extinguished and the heater will need restarting.

(3) When heater starts, move start switch (3) on heater control box (1) to “ON" position. If heater does not start, move start switch (3) to “OFF" position for 10 seconds and then back to "START” for 60 seconds. Repeat procedure if heater doesn't start.

c. Starting Engine With Arctic Heater Assistance.

(1) Pull defroster control knob (9) all the way out to ensure hot air is not directed on windshield.
(2) Pull exhaust diverter cable knob (6) out to allow heater exhaust to heat the engine oil pan.
(3) Open battery box door (8), by sliding away from plenum (7), to heat batteries.
(4) Move regulator control lever (5) up to "STANDARD HEAT” position.

CAUTION

Do not operate arctic heater in ambient temperatures above 0°F (-18°C), or with temperature switch in “HI” position, when temperature is above -25°F (-32°C). Damage to equipment will result.

(5) Start arctic heater and set temperature switch (4) on heater control box (1) to “LO” position for temperatures from 0°F (-18°C) to -25°F (-32°C), or “HI” position for temperatures from -25°F (-32°C) to -50°F (-46°C).

(6) Operate heater for 30 minutes maximum at -50°F (-46°C); less time may be required for higher ambient temperatures.

CAUTION

Close battery box door after 30 minutes of arctic heater operation or when engine is running. Failure to do so may result in damage to batteries.

(7) Close battery box door (8) by sliding toward plenum (7).

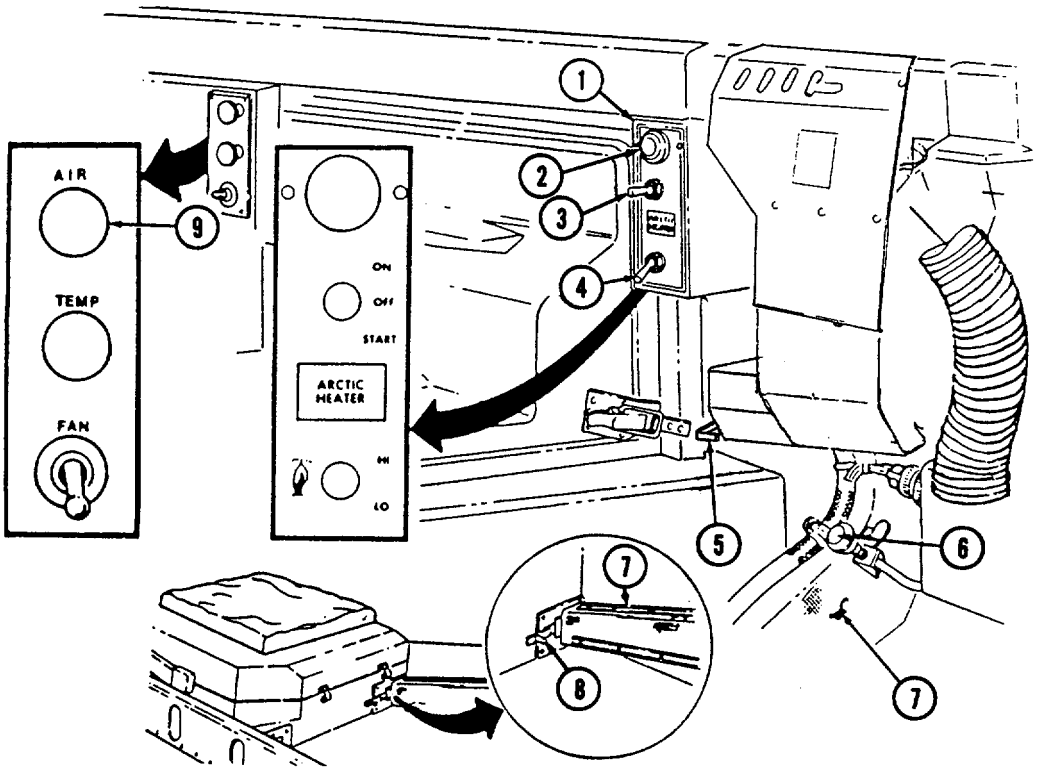

(8) Push exhaust diverter cable knob (5) in to shut off heat to engine oil pan.
(9) Start engine (para. 2-30).
(10) If engine fails to start, notify unit maintenance.

d. Stopping Arctic Heater.

Set start switch (2) on heater control box (1) to “OFF" position.

NOTE

The yellow indicator lamp will remain lit and the fan will continue to run until the heater has purged itself of fuel.

e. Defrosting Windshield in Ambient Temperatures Above -25°F (-32°C).

CAUTION

- Cab must be heated prior to defrosting, or damage to windshield will occur.
- Use of the arctic heater to defrost in temperatures above -25°F (-32°C) will damage the windshield.
- Do not operate arctic heater with regulator control lever in "STANDARD HEAT" position and battery box door closed, or damage will occur.

(1) Start engine with arctic heater assistance.
(2) Shut off arctic heater.
(3) Push defroster control knob (8) all the way in to direct air on windshield.
(4) Pull temperature control knob (7) all the way out for maximum heat.
(5) Set regulator control lever (4) up to “STANDARD HEAT" position.
(6) Set standard heater fan switch (6) to "HI" position until windshield is defrosted.

f. Defrosting Windshield in Ambient Temperatures from -25°F (-32°C) to -50°F (-46°C).

(1) Start engine with arctic heater assistance.
(2) Set temperature switch (3) on heater control box (1) to “LO" position.
(3) Set regulator control lever (4) down to "ARCTIC HEAT" position.
(4) Push defroster control knob (8) all the way in to direct air on windshield.
(5) Pull temperature control knob (7) all the way out for maximum heat.
(6) Set standard heater fan switch (6) to "LO" position until windshield is defrosted.

g. Heating Cab with Arctic Heater.

(1) Start engine (para. 2-30).

CAUTION

Do not operate arctic heater in ambient temperatures above 0°F (-18°C), or with temperature switch in "HI" position, when temperature is above -25°F (-32°C), or without standard heater fan on. Damage to equipment will result.

(2) Start arctic heater and set temperature switch (3) on heater control box (1) to "LO" position for temperatures from 0°F (-18°C) to -25°F (-32°C), or "HI" position for temperatures from -25°F (-32°C) to -50°F (-46°C).

(3) Set regulator control lever (4) to "ARCTIC HEAT" position.

(4) Pull defrost control knob (8) all the way out to direct airflow to heat ducts.

(5) Pull temperature control knob (7) all the way out for maximum heat.

(6) Set standard heater fan switch (6) to desired position to mix air.

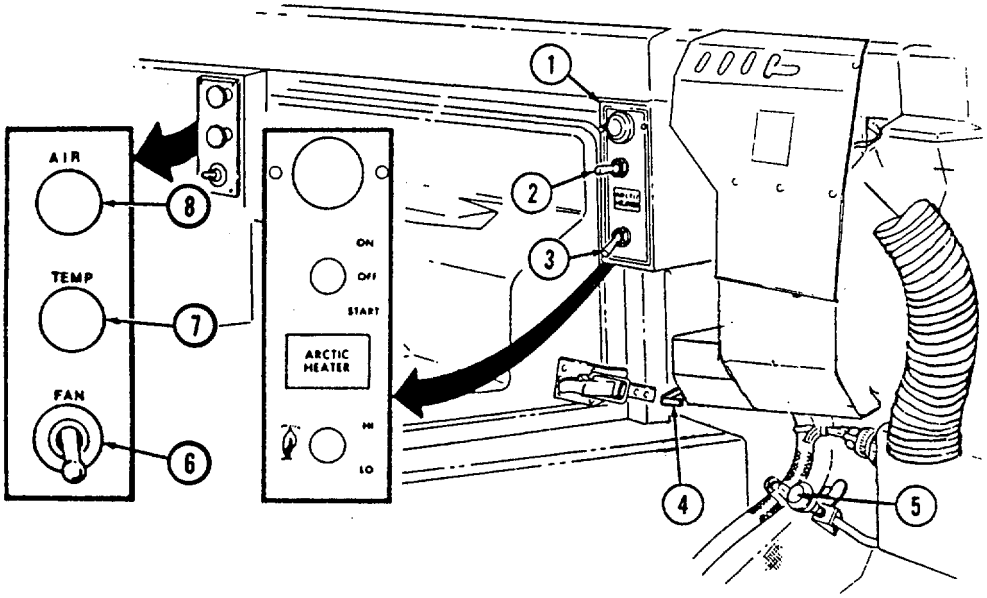

2-41. TROOP/CARGO WINTERIZATION HEATER OPERATING INSTRUCTIONS

a. General.

Troop/cargo winterization heater is for use during extremely cold temperatures from 0°F (-18°C) to -50°F (-46°C).

CAUTION

Do not operate troop/cargo heater in ambient temperatures above 0°F (-18°C), or with fan switch in “HI" position, when temperature is above -25°F (-32°C). Damage to equipment will result.

NOTE

Heater may be operated with engine running or engine off.

b. Starting Heater.

(1) Set heater fan switch (4) to "LO" position.

(2) Move heater control switch (2) to "START position and hold for approximately two minutes or until heater starts and heater indicator light (1) comes on.

(3) When heater starts, move heater control switch (2) to “RUN" position. The heater indicator light (1) will remain illuminated.

(4) Set heater fan switch (4) to desired position ("HI" or “LO").

NOTE

To defrost the interior of the troop/cargo enclosure, the diverter assembly door should be shut or in the closed position.

(5) Adjust diverter assembly (3) to regulate amount of outside and inside air to be circulated through the heater assembly and into the troop/cargo area.

c. If Heater Fails to Start:

NOTE

If the start switch is moved from the “START" to “RUN" position too quickly, the heater flame will be extinguished and the heater will need restarting.

(1) Move heater control switch (2) to ”OFF" position for 10 seconds, and then back to “START" for 60 seconds. Repeat procedure if heater doesn't start.

(2) Press heater indicator light (1) to test electrical circuit.

(3) If heater indicator light (1) works and heater still fails to start in approximately three minutes, service is required.

d. Shutting Heater Off.

Move heater control switch (2) to ”OFF."

NOTE

The heater indicator light will remain on and the fan will continue to run until the heater has purged itself of fuel.

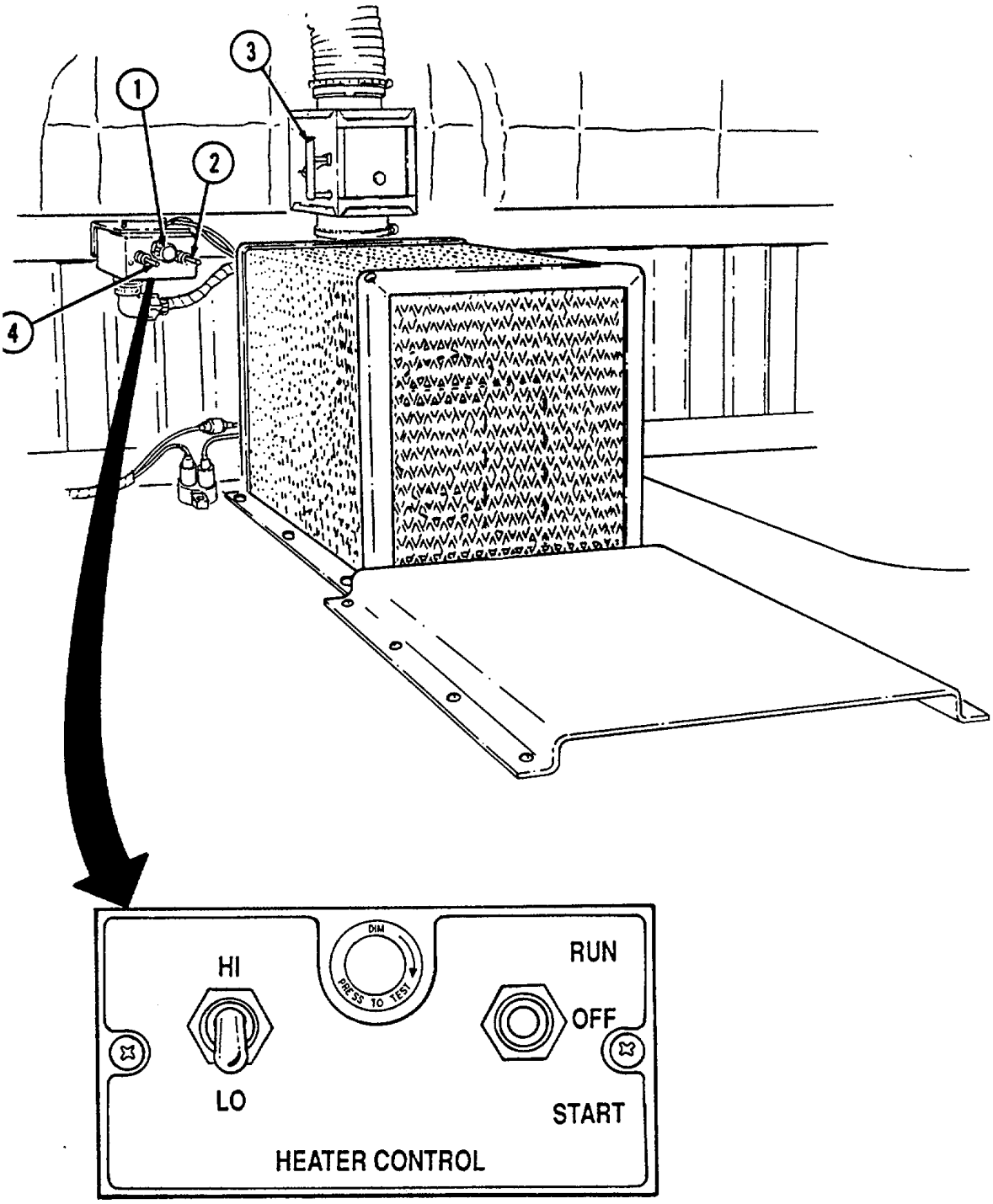
1
2
3
4
DIM
PRESS TO TEST
HI
LO
RUN
OFF
START
HEATER CONTROL

Section V. CARGO/TROOP CARRIER AND S250 SHELTER CARRIER OPERATION

2-42. GENERAL

a. This section provides operating instructions for components found on M998, M998A1, M1038, and M1038A1 cargo/troop carriers and M1037 and M1042 S250 shelter carriers.

b. Refer to para. 2-2a for stowage location of fire extinguisher on cargo/troop carriers and S250 shelter carriers. Refer to para. 2-27 for operation of fire extinguisher.

2-43. WINDSHIELD ASSEMBLY OPERATION

WARNING

Do not operate the vehicle without the windshield assembly positioned upright and the "B" pillar securely attached. Operation of the vehicle without these structures in place may result in injury to personnel and damage to equipment.

NOTE

Before lowering windshield on vehicles equipped with retention bracket, the windshield retention bracket must be removed. Refer to unit maintenance.

a. Lowering Windshield Assembly.

(1) Remove two hitch pins (3) from inside hinge pins (4) and remove hinge pins (4).

(2) Lower windshield assembly (5) to hood and secure to four footman loops (2) with two straps (1).

b. Raising Windshield Assembly.

(1) Remove straps (1) from footman loops (2) securing windshield assembly (5) to hood.

(2) Raise windshield assembly (5).

(3) Secure windshield assembly (5) with two inside hinge pins (4) and hitch pins (3).

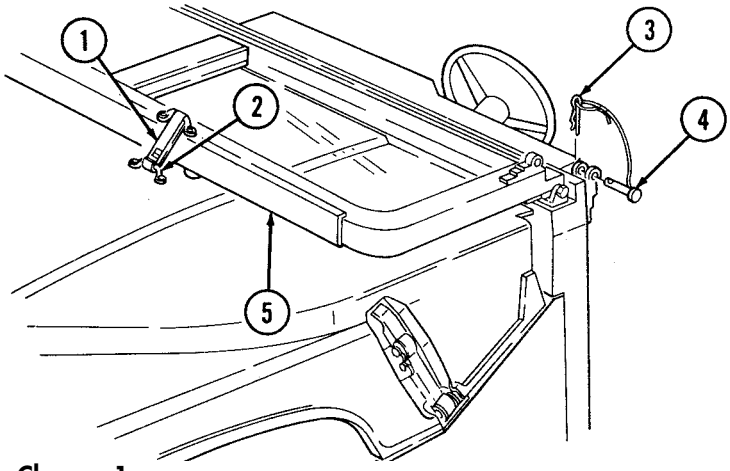

2-44. TROOP SEAT KIT OPERATION

a. General. The troop seat kit is used to convert M998, M998A1, M1097, M1097A1, M1097A2, and M1123 cargo vehicles into troop carriers.

b. Lowering Troop Seat.

(1) Remove two lockpins (7) from troop seat (6).

(2) Lower troop seat (6).

(3) Install two lockpins (7) to secure troop seat (6).

c. Raising Troop Seat.

(1) Remove two lockpins (7) from troop seat (6).

(2) Raise troop seat (6) and secure with two lockpins (7).

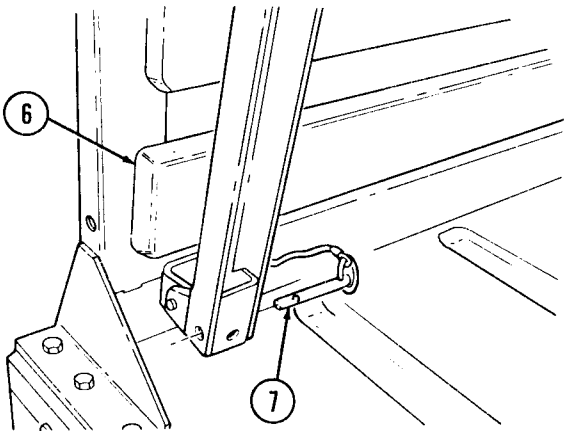

2-45. CARGO TIEDOWN OPERATION

CAUTION

The static rated working load of the tiedown ring assembly is 500 lb (227 kg) applied along the centerline of the assembly. Side-loading the tiedown ring assembly will cause damage to the tiedown and/or cause the tiedown bolt to become loose. Either of these conditions will result in an unrestrained load causing damage to vehicle and/or equipment.

The load must be applied as shown below. If tiedown rings (9) loosen, position tiedown ring (9) in direction of load and tighten bolt (8). Notify unit maintenance to tighten bolt (8) to 65 lb-ft (88 N·m) when practical.

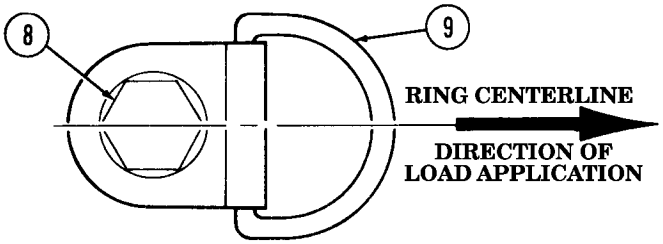

2-46. REMOVAL AND INSTALLATION OF TWO-MAN CREW AREA SOFT TOP ENCLOSURE

NOTE

- Ensure P/N 12340736-7 is used for replacement of soft top on vehicles equipped with three-point seatbelt.
- For ease of installation, soft top components should be installed when temperatures are above 72°F (22°C).
- To keep hinge screws tight, lockwasher NSN 5310-00-527-3634 and locknut NSN 5310-00-241-6658 can be used for installation of soft top doors.
- To prevent seams from leaking, coat with adhesive as needed (refer to appendix D, item 1).

a. General. The two-man soft top enclosure consists of two soft doors, rear curtain, cab roof cover, two rails and bow assembly.

b. Removal of Soft Top Doors.

(1) Open door (1) and detach door holding check strap (3) from mounting plate (2).
(2) Raise door (1) to remove hinge pins (5) from hinge brackets (4).
(3) Remove door (1).

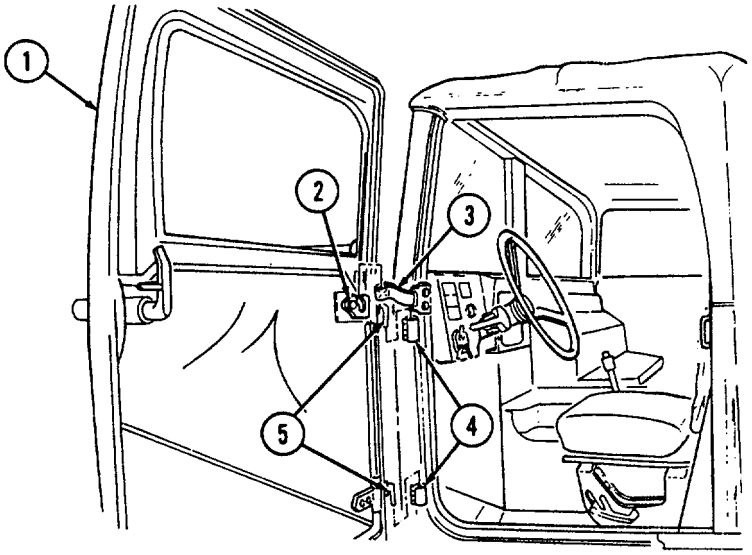

c. Removal of Cab Roof Cover, Rails, and Bow Assembly.

(1) Unfasten eyelets (7) from turnbuttons (15) on horizontal rails (14), and unfasten hook and loop attachments (9) securing cab roof cover (10) to bow assembly (8).
(2) Remove cab roof cover (10) from horizontal rails (14).
(3) Unfasten eyelets (11) from turnbuttons (12) on “B" pillar (13) and “A" pillar (18).

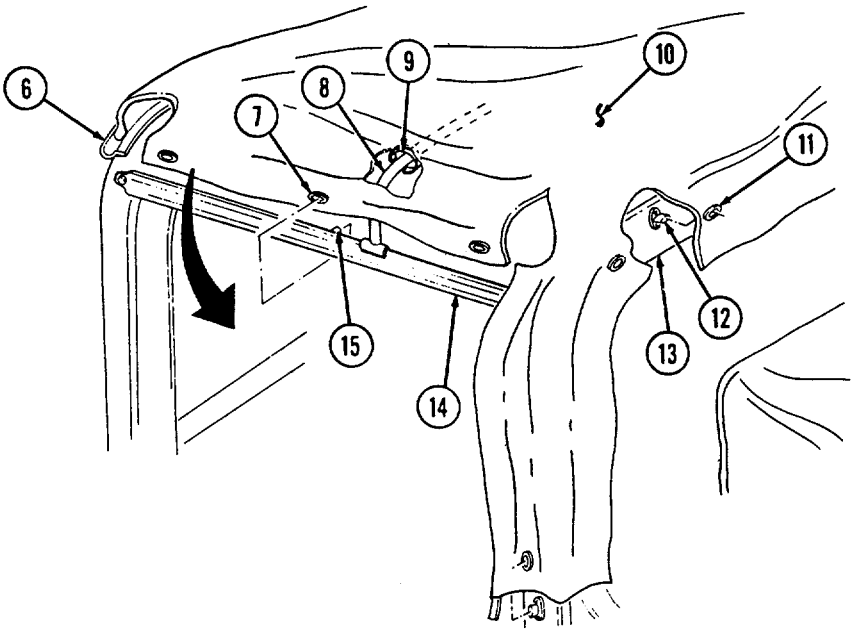

(4) Roll cab roof cover (10) over windshield and slide cab roof cover (10) from channel (6).

(5) Remove four screws (17) and bow assembly (8) from horizontal rails (14).

(6) Remove four screws (16) securing two horizontal rails (14) to “A” pillar (18) and “B” pillar (13). Remove horizontal rails (14).

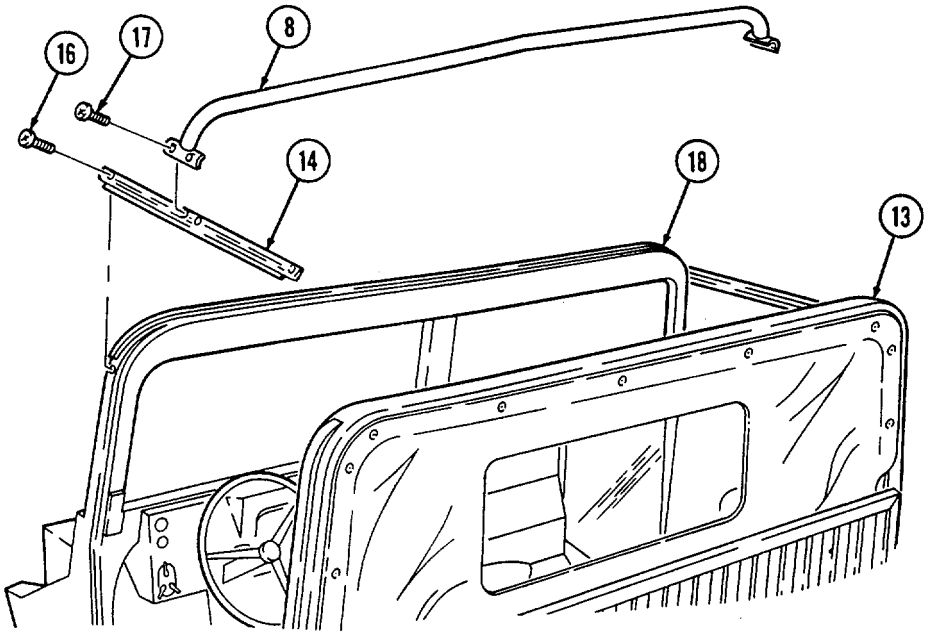

d. Removal of Rear Curtain.

(1) Detach curtain straps (5) from footman loops (7) behind seats by depressing locking taps (6).

NOTE

Perform step 2 if vehicle is equipped with two-man arctic cab.

(2) Peel curtain (4) back from fastener tape (8).
(3) Unfasten eyelets (3) from turnbuttons (2) on "B" pillar (1).
(4) Remove rear curtain (4).

e. Installation of Rear Curtain.

(1) Install rear curtain (4) to "B" pillar (1) by fastening eyelets (3) to turn buttons (2).

NOTE

Perform step 2 if vehicle is equipped with two-man arctic cab.

(2) Attach curtain (4) to fastener tape (8).
(3) Attach curtain straps (5) to footman loops (7) located behind seats. Tighten straps (5) equally, but do not overtighten.

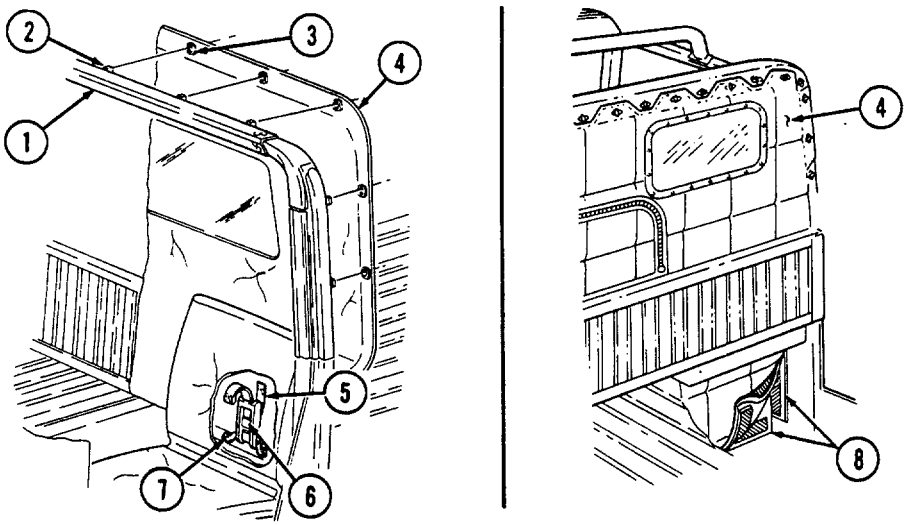

f. Installation of Cab Roof Cover, Rails, and Bow Assembly.

(1) Install two horizontal rails (12) on “A" pillar (13) and "B" pillar (1), and secure with four screws (9). The short end of horizontal rails (12) go toward front of vehicle.
(2) Loosen end bracket screws (14) and install bow assembly (11) on horizontal rails (12) and secure with four screws (10). Retighten bracket screws (14).
(3) Slide cab roof cover (18) into channel (15) on “A" pillar (13) and roll cab roof cover (18) over cab.
(4) Install cab roof cover (18) over rear curtain (4) at “B" pillar (1) and fasten eyelets (3) to turnbuttons (2) on "B" pillar (1) and "A" pillar (13).
(5) Position cab roof cover (18) around horizontal rails (12) and fasten eyelets (16) to turnbuttons (19). Secure cab roof cover (18) to bow assembly (11) with hook and loop attachments (17).

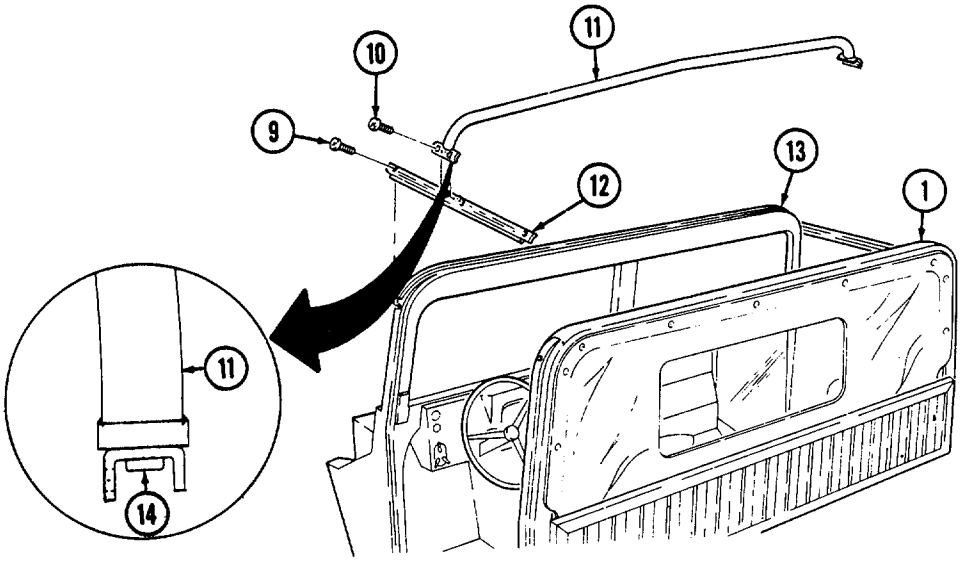
11
10
9
13
12
1
11
14

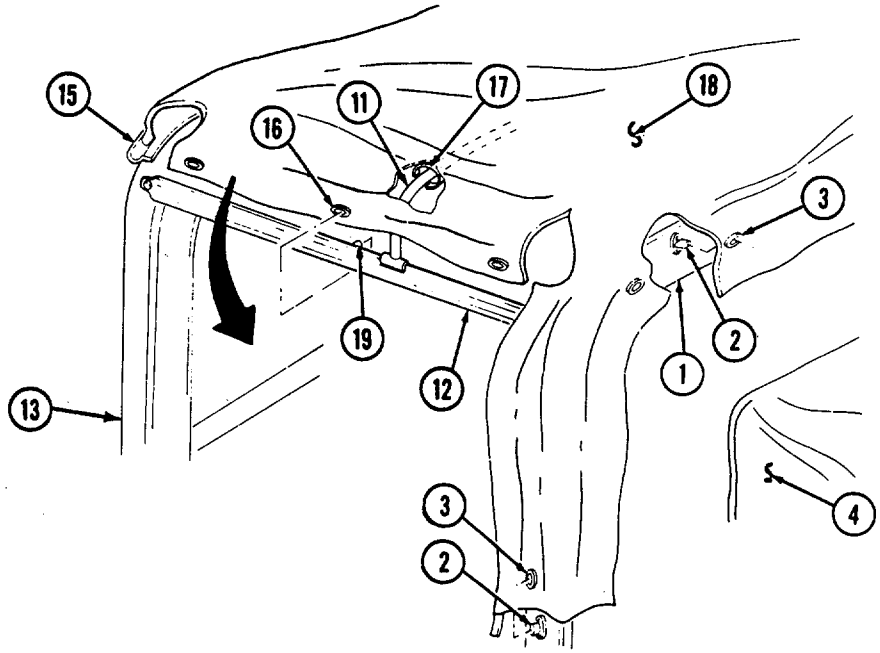
15
11
17
18
16
3
19
2
1
12
13
4
3
2

g. Installation of Soft Top Doors.

(1) Apply a small amount of seasonal grade OE oil to hinge pins (6), and install door (1) by inserting hinge pins (6) into hinge brackets (5).

(2) Install door holding check strap (3) on mounting plate (2).

CAUTION

If door is jammed, do not force open. Excessive force may damage door.

(3) Close door (1). It may be necessary to adjust door hinges (5) or door latch striker (4) to achieve a tight seal. If adjustment is necessary, notify unit maintenance.

NOTE

When lowering the soft top door window, always fold the window to the inside of the vehicle and secure between the door and the door frame crossmember.

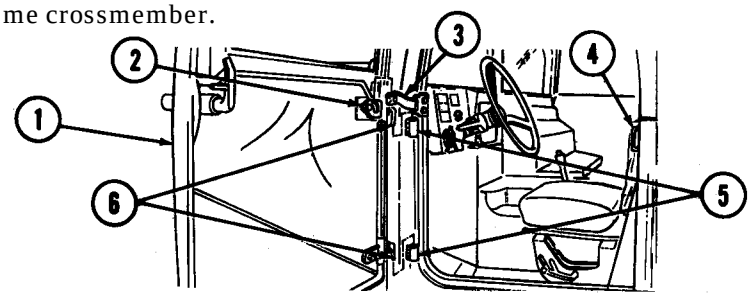

2-47. REMOVAL AND INSTALLATION OF TROOP AREA SOFT TOP ENCLOSURES

CAUTION

Remove any accumulation of rain, snow, and ice from the cargo cover as soon as possible. Failure to do so could result in damage to the cargo cover assembly. If the vehicle is to be parked for a long period of time, the cargo cover can be removed. The decision whether or not to remove the cover should be based on the length of time the vehicle is to be parked and the expected weather conditions.

NOTE

- For ease of installation, soft top components should be installed when temperatures are above 72°F (22°C).
- To prevent seams from leaking, coat with adhesive as needed (refer to appendix D, item 1)

a. Removal of Troop Area Enclosure.

(1) Unfasten eyelets (9) from turnbuttons (8) on “B” pillar (16), front bow (10), and rear bow (13).

(2) Press locking tab (20) and unhook straps (14) from footman loops (19).

(3) Detach hook and loop attachment securing front flap (7) of troop area soft top (12) from two-man crew area soft top (17). Remove grommets (18) from footman loops (19).

(4) Remove troop area cover (12).

b. Removal of Bows. Remove bows (10), (11), and (13) from bow retainer (15).

c. Installation of Bows. The front bow assembly (10) and rear bow assembly (13) contain turnbuttons (8); the front bow assembly (10) has shorter legs. Install bows (10), (11), and (13) into bow retainers (15).

d. Installation of Troop Area Enclosure.

NOTE

- Troop seats and two-man crew area soft top must be installed prior to installation of bows and troop area enclosure.
- To prevent canvas noise and damage, tiedowns can be added to the canvas at the commander's discretion, refer to unit maintenance.

(1) Install troop area cover (12) over "B" pillar (16), front bow (10), intermediate bows (11), and rear bow (13).

(2) Fasten eyelets (9) to turnbuttons (8) on "B" pillar (16), front bow (10), and rear bow (13).

(3) Fit troop area cover (12) evenly to ensure tight fit and secure by installing grommets (18) over footman loops (19). Attach straps (14) to footman loops (19) and pull straps (14) tight.

(4) Secure front flap (7) of troop area cover (12) to two-man crew area soft top (17).

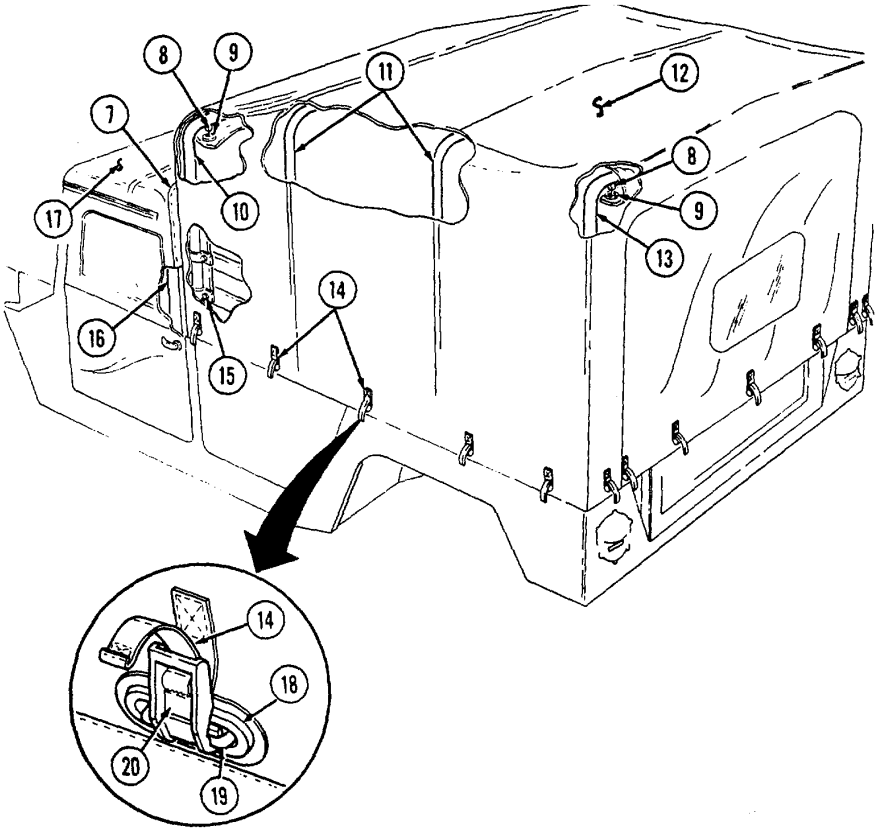

2-48. REMOVAL AND INSTALLATION OF FOUR-MAN CREW AREA SOFT TOP AND ARCTIC SOFT TOP ENCLOSURES

NOTE

- For ease of installation, soft top components should be installed when temperatures are above 72°F (22°C).
- To prevent seams from leaking, coat with adhesive as needed (refer to appendix D, item 1).

a. General. The four-man soft top and arctic soft top enclosures consist of four soft doors, rear curtain, cab roof cover, and bow assemblies. For removal and installation of doors, refer to para. 2-46. Para. 2-48 covers removal and installation of four-man cab roof cover, rails, bow assemblies, and rear curtain.

b. Removal of Cab Roof Cover, Rails, and Bow Assemblies.

(1) Unfasten eyelets (2) from turnbuttons (3) on horizontal rails (12) and “A" pillar (13). Unfasten hook and loop attachments (5) securing cab roof cover (6) to bow assemblies (4) and “”B" pillar (11).
(2) Remove cab roof cover (6) from horizontal rails (12).
(3) Unfasten eyelets (8) from turnbuttons (7) on “C" pillar (9).
(4) Roll cab roof cover (6) over windshield and slide cab roof cover (6) from channel (1).
(5) Remove eight screws (14) and two bow assemblies (4) from horizontal rails (12).
(6) Remove six screws (15) and two horizontal rails (12) from “A" pillar (13), “B” pillar (11), and “C" pillar (9).

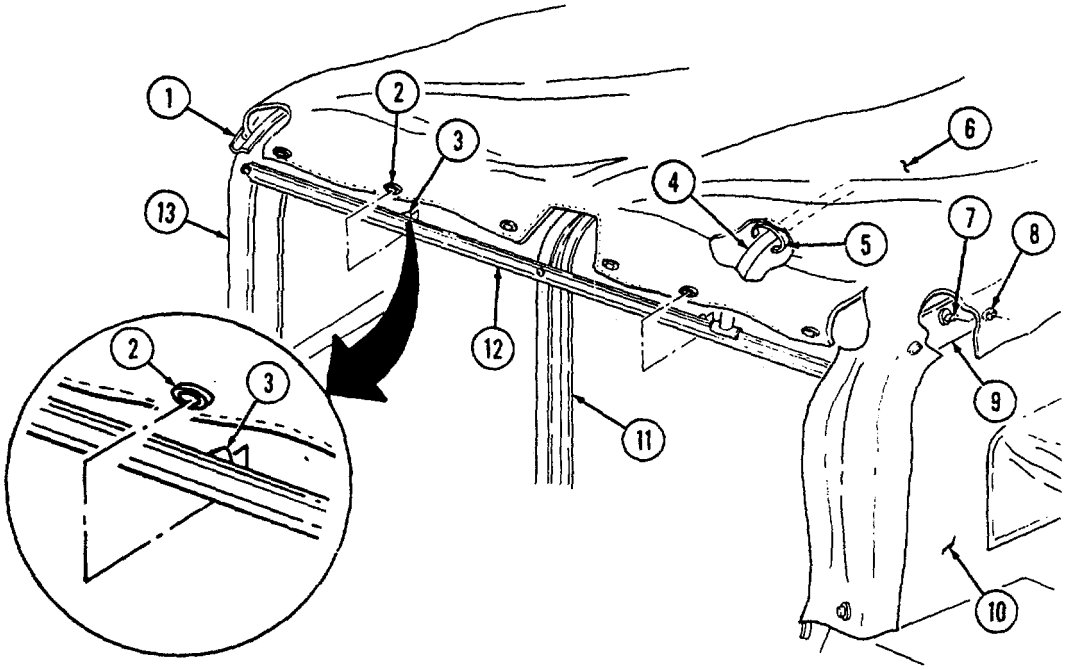

c. Installation of Rails, Bow Assemblies, and Cab Roof Cover.

NOTE

Align horizontal rail holes with holes in "A," "B," and "C" pillars.

(1) Install two horizontal rails (12) on "A" pillar (13), "B" pillar (11), and "C" pillar (9) and secure with six screws (15).

(2) Loosen end bracket screws (16), and install two bow assemblies (4) on horizontal rails (12) with eight screws (14). Tighten bracket screws (16).

(3) Slide cab roof cover (6) into channel (1) on "A" pillar (13), roll cab roof cover (6) over cab, and fasten eyelets (2) to turnbuttons (3) on "A" pillar (13).

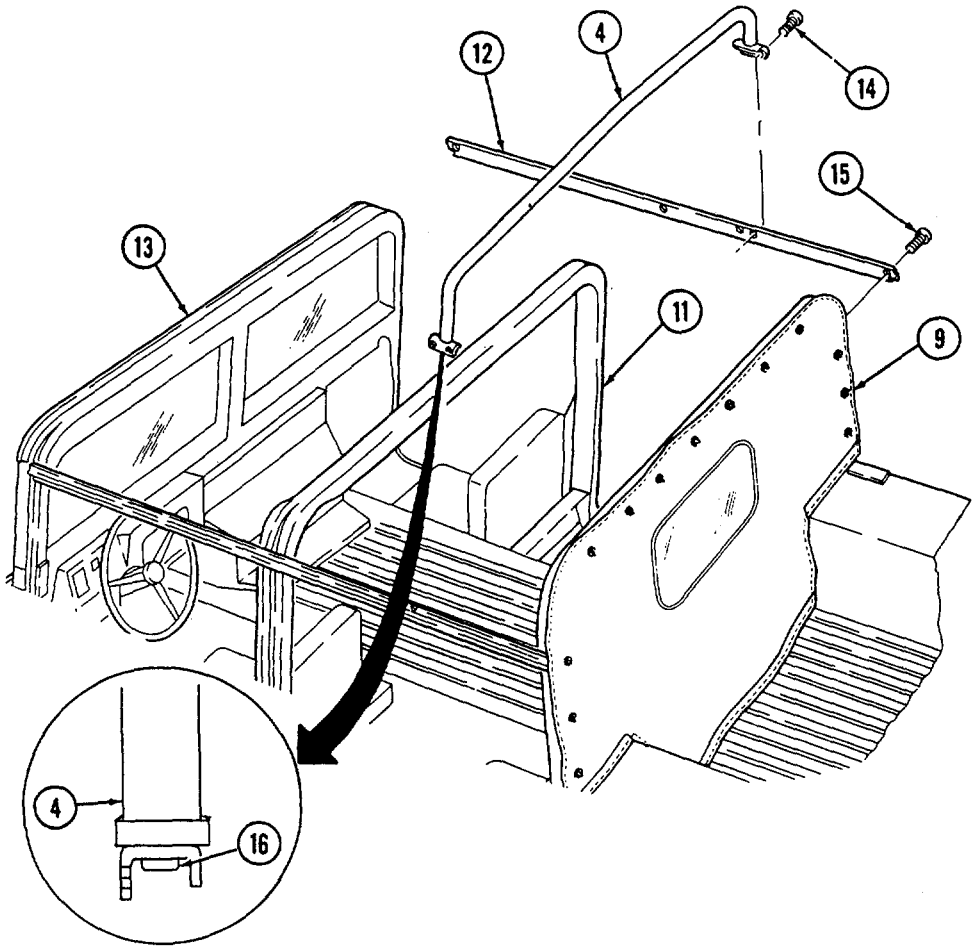

(4) Install cab roof cover (6) over rear curtain (10) at "C" pillar (9) and fasten eyelets (8) to turnbuttons (7) on "C" pillar (9).

(5) Position cab roof cover (6) around horizontal rails (12) and fasten eyelets (2) to turnbuttons (3). Attach cab roof cover (6) to bow assemblies (4) with hook and loop attachments (5).

d. Removal of Rear Curtain.

(1) Detach four curtain straps (11) from footman loops (13) on wheelhousings (15) and cargo floor (14) by depressing locking tabs (12).

NOTE

Perform step 2 if vehicle is equipped with four-man arctic cab.

(2) Peel curtain (2) back from fastener tape (3).
(3) Unfasten eyelets (10) from turnbuttons (16) on "C" pillar (1).

NOTE

Perform step 4 for vehicles equipped with three-point seatbelts.

(4) Unfasten eyelets (7) from turnbuttons (8) on rear seatbelt bracket (9).
(5) Remove curtain (4).

e. Installation of Rear Curtain.

(1) Install curtain (4) on “”C” pillar (1) by fastening eyelets (10) to turnbuttons (16).

NOTE

- Perform steps 2 and 3 when installing new curtain on vehicles with three-point seatbelts.
- Ensure P/N 12342475 is used for replacement of rear curtain on vehicles equipped with three-point seatbelt.

(2) Cut away inside curtain panel (17) and remove curtain panel (17) from curtain (4).
(3) Cut away outside curtain panel (6) and remove curtain panel (6) from curtain (4).
(4) Extend rear seatbelt bracket boot (5) and install over rear seatbelt bracket (9).
(5) Fasten eyelets (7) to turnbuttons (8) on rear seatbelt bracket (9).

NOTE

Perform step 6 if vehicle is equipped with four-man arctic cab.

(6) Attach curtain (2) to fastener tape (3).
(7) Attach four curtain straps (11) to footman loops (13) on wheelhousings (15) and cargo floor (14). Tighten straps (11) equally, but do not overtighten.

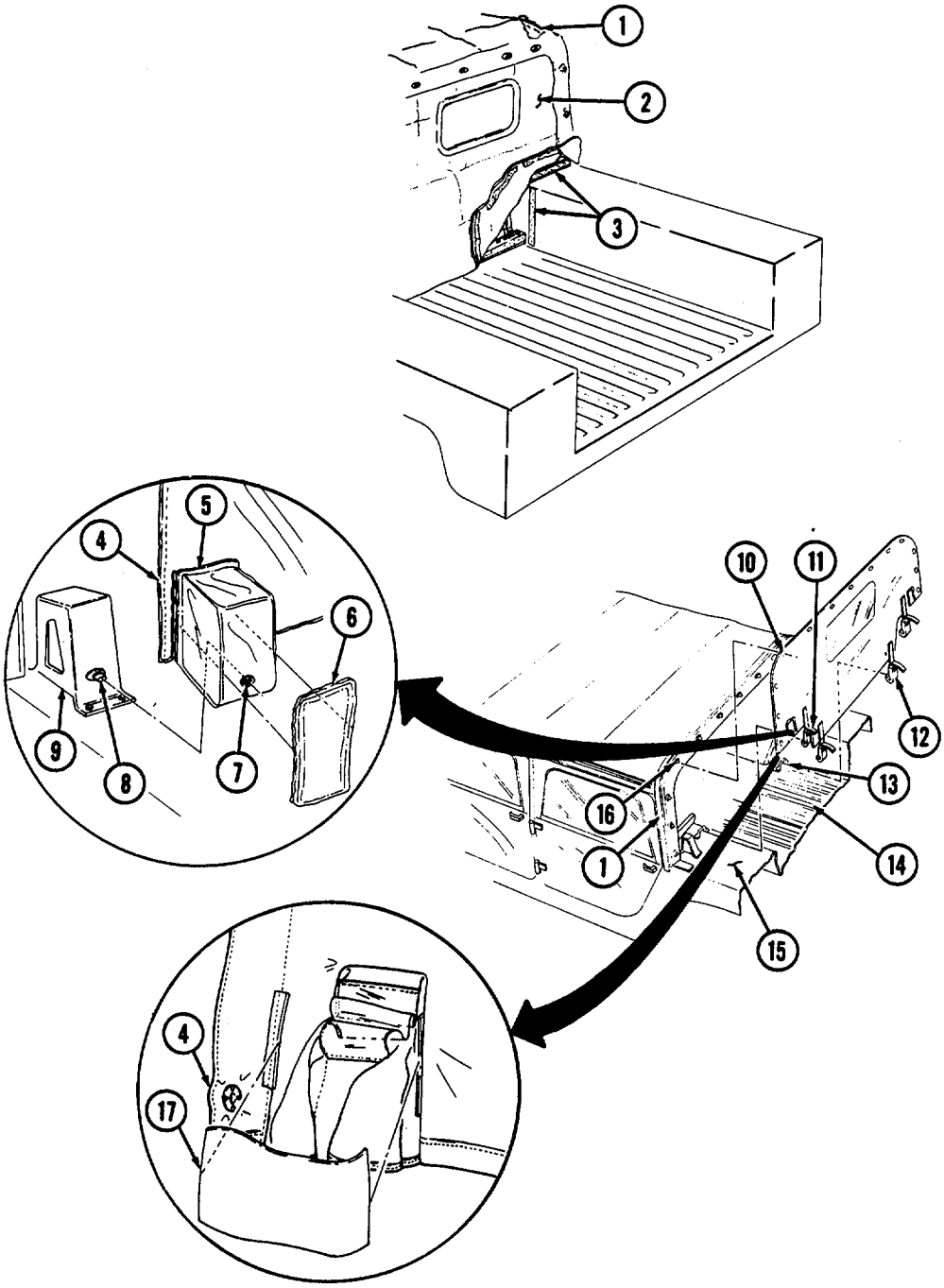
1
2
3
4
5
6
7
8
9
10
11
12
13
14
15
16
1
4
17

2-49. REMOVAL AND INSTALLATION OF FOUR-MAN CARGO AREA SOFT TOP ENCLOSURE

NOTE

- For ease of installation, soft top components should be installed when temperatures are above 72°F (22°C).
- To prevent seams from leaking, coat with adhesive as needed (refer to appendix D, item 1).

CAUTION

Remove any accumulation of rain, snow, and ice from the cargo cover as soon as possible. Failure to do so could result in damage to the cargo cover assembly. If the vehicle is to be parked for a long period of time, the cargo cover can be removed. The decision whether or not to remove the cover should be based on the length of time the vehicle is to be parked and the expected weather conditions.

a. Removal of Cargo Enclosure.

(1) Unfasten hook and loop attachment (3) securing cargo cover (6) to cab roof (2) at "C" pillar (8).
(2) Unfasten eyelets (5) from turnbuttons (4) on "C" pillar (8), front bow (1), and rear bow (7).
(3) Detach straps (9) from footman loops (11) by depressing locking tabs (12) and loosening straps (9). Remove grommets (10) from footman loops (11).
(4) Remove cargo cover (6).

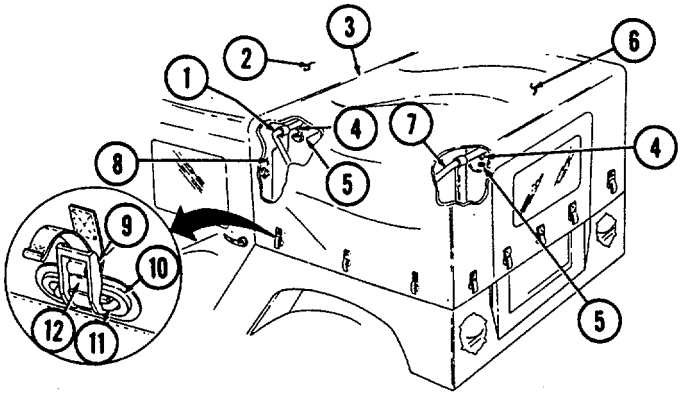

b. Removal of Bows.

NOTE

If bows are broken or bent, reinforce 3/64 in. (1.2 mm) thick bow walls with steel rod NSN 9510-00-596-2063. Reinforce 3/32 in. (2.4 mm) bows with steel rod NSN 9510-00-596-2066.

(1) Depress locking tabs (14) and unhook straps (13) from footman loops (15
(2) Remove capscrews (19) securing longitudinal bow (20) to front bow (1) and rear bow (7). Remove longitudinal bow (20).
(3) Remove four snaprings (17) and pivot pins (16) securing front bow (1) an rear bow (7) to pivot brackets (18). Remove bows (1) and (7).

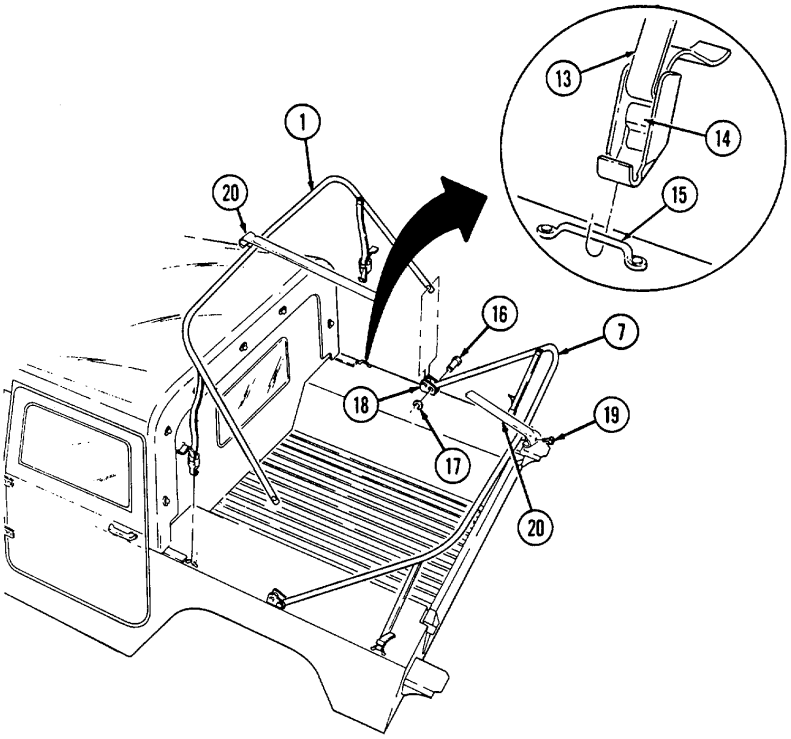

c. Installation of Bows.

NOTE

Four-man crew area soft top must be installed before installation of bows and cargo enclosure.

(1) Install bows (1) and (7) on pivot brackets (18) and secure with four pivot pins (16) and snaprings (17).
(2) Install longitudinal bow (20) on front bow (1) and rear bow (7) and secure with two capscrews (19).
(3) Install straps (13) on footman loops (15) and pull straps (13) tight.

d. Installation of Cargo Enclosure.

(1) Install cargo cover (6) over “C" pillar (8), front bow (1), and rear bow (7).
(2) Fasten eyelets (5) to turnbuttons (4) on "C" pillar (8), front bow (1), and rear bow (7).
(3) Secure cargo (6) to cab roof (2) at "C" pillar (8) with hook and loop attachment (3).
(4) Install grommets (10) on footman loops (11) and attach straps (9) to footman loops (11). Tighten straps (9) equally, but do not overtighten.

2-50. REMOVAL AND INSTALLATION OF S250 SHELTER CARRIER REAR SUSPENSION TIEDOWN KIT

CAUTION

The M1037 and M1042 shelter carriers are specifically designed to be operated with the S250 shelter installed. The vehicles can be driven safely without the shelter installed, or equivalent payload of 1,500 lb (681 kg), for short distances (e.g., to and from maintenance or from the rail head when being delivered), but this should not be done often or for long distances. Driving for long distances without the shelter installed, or equivalent payload of 1500 lb (681 kg) evenly distributed in center of cargo area, will cause damage to equipment.

NOTE

- Rear suspension tiedown kit is to be used only for shipment and should be removed promptly after shipment.
- The following applies to M1037 and M1042 vehicles only.

a. Removal of S250 Rear Suspension Tiedown Kit.

(1) Using wrench provided, turn out turnbuckle assembly (1) and unhook from suspension tiedown bracket (2) and suspension tiedown bar (7).

(2) Remove suspension tiedown bracket (2) from upper spring mount bracket (4).

(3) Remove suspension tiedown bar (7) from lower control arm (5).

b. Installation of S250 Rear Suspension Tiedown Kit.

CAUTION

Ensure suspension tiedown bracket is fully seated to upper spring mount bracket and nut. Suspension tiedown bracket could spring free under tension, causing damage to vehicle.

(1) Install suspension tiedown bracket (2) to upper spring mount bracket (4) with cupped end seated against upper spring mount bracket nut (3).

(2) Install suspension tiedown bar (7) into lower control arm (5) and shock mount bracket (6).

NOTE

Ensure turnbuckle assembly eye and hook have an equal amount of threads inside the turnbuckle.

(3) Grease threads on turnbuckle assembly (1) and hook turnbuckle assembly (1) to suspension tiedown bar (7) and suspension tiedown bracket (2).

(4) With wrench provided, tighten until turnbuckle assembly (1) is completely turned in.

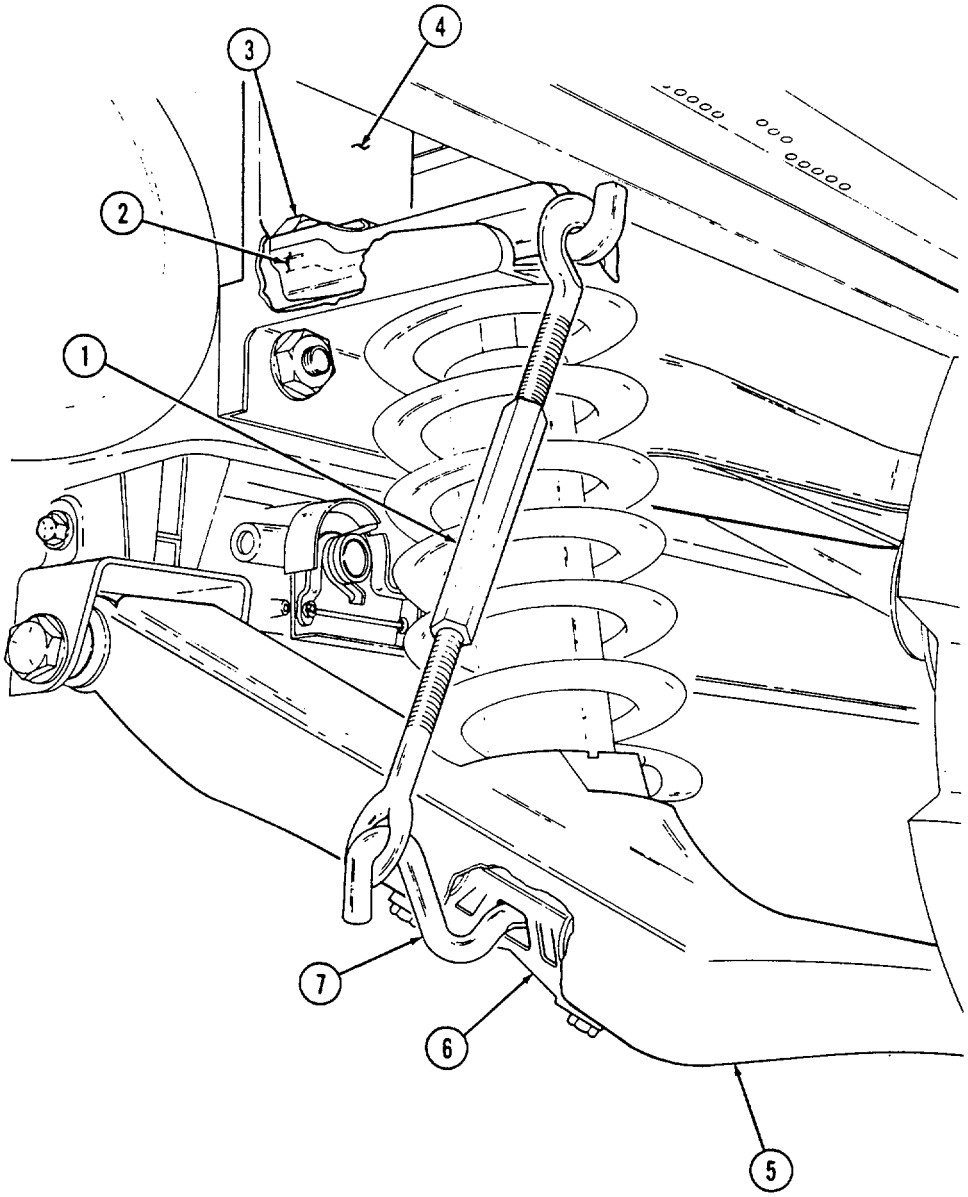
1
2
3
4
5
6
7

2-51. REMOVAL AND INSTALLATION OF CARGO BARRIER EXTENSION

a. Removal of Cargo Barrier Extension.

Remove quick release pin (5) from post assembly (2) and remove cargo barrier extension (1) from cargo bulkhead (3).

b. Installation of Cargo Barrier Extension.

NOTE

When installing cargo barrier extension, ensure side rack pins on post assemblies slide into holes of cargo bulkhead.

Install cargo barrier extension (1) into four mounting brackets (4) on cargo bulkhead (3) and secure with quick release pin (5).

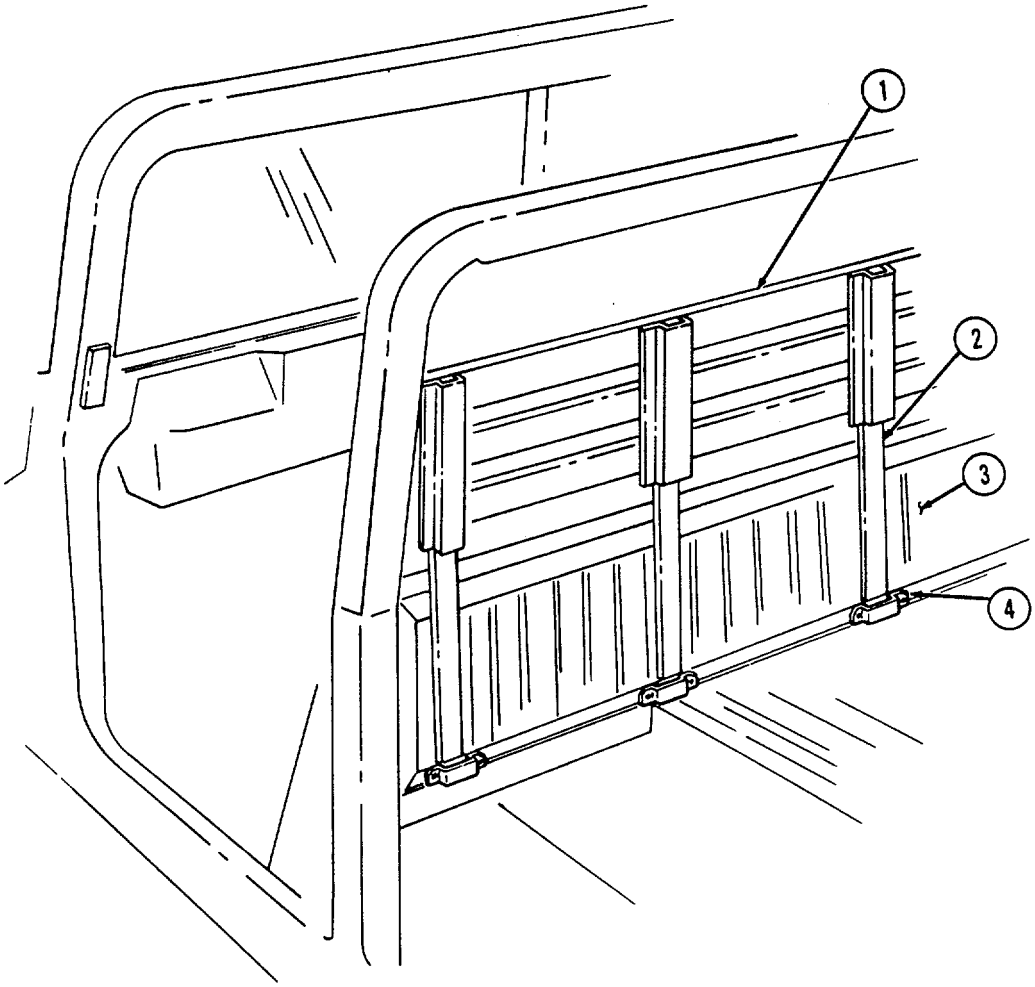

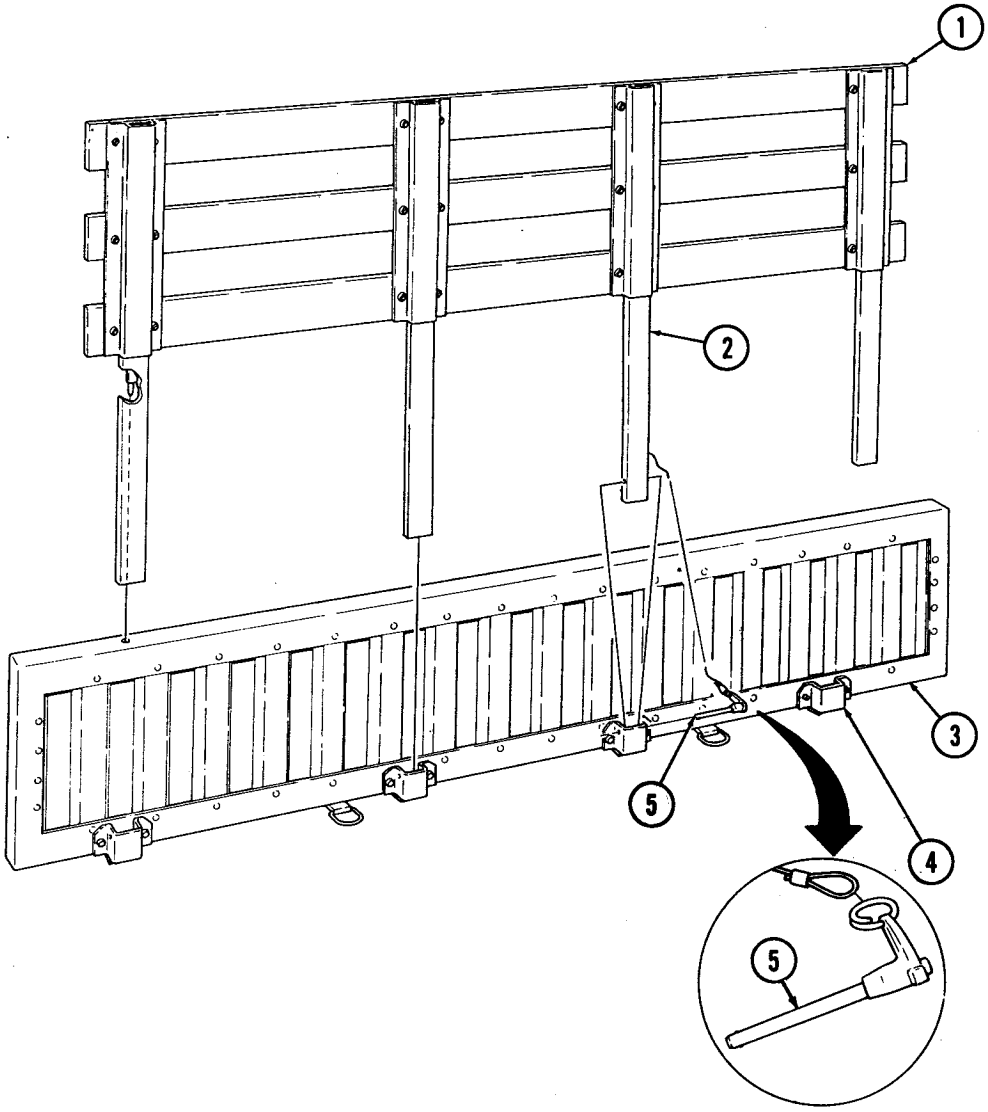
1
2
3
4
5
5

2-51.1. REMOVAL AND INSTALLATION OF CARGO BARRIER AND NET

NOTE

Removal and installation instructions for the cargo barrier and stowage compartment net are applicable only for M1025, M1025A1, M1026, and M1026A1 vehicles equipped with the cargo barrier and net kit.

a. Removal of Cargo Barrier and Net.

(1) Remove net (2) by unhooking two J-hooks (5) from D-rings (4) on cargo floor (3), two J-hooks (1) from D-rings (7) on left and right wheelhouses (6), and three J-hooks (10) from D-rings (11) at D-beam (12) on cargo floor (3).

(2) Slide cargo barrier (8) out of left and right channels (9).

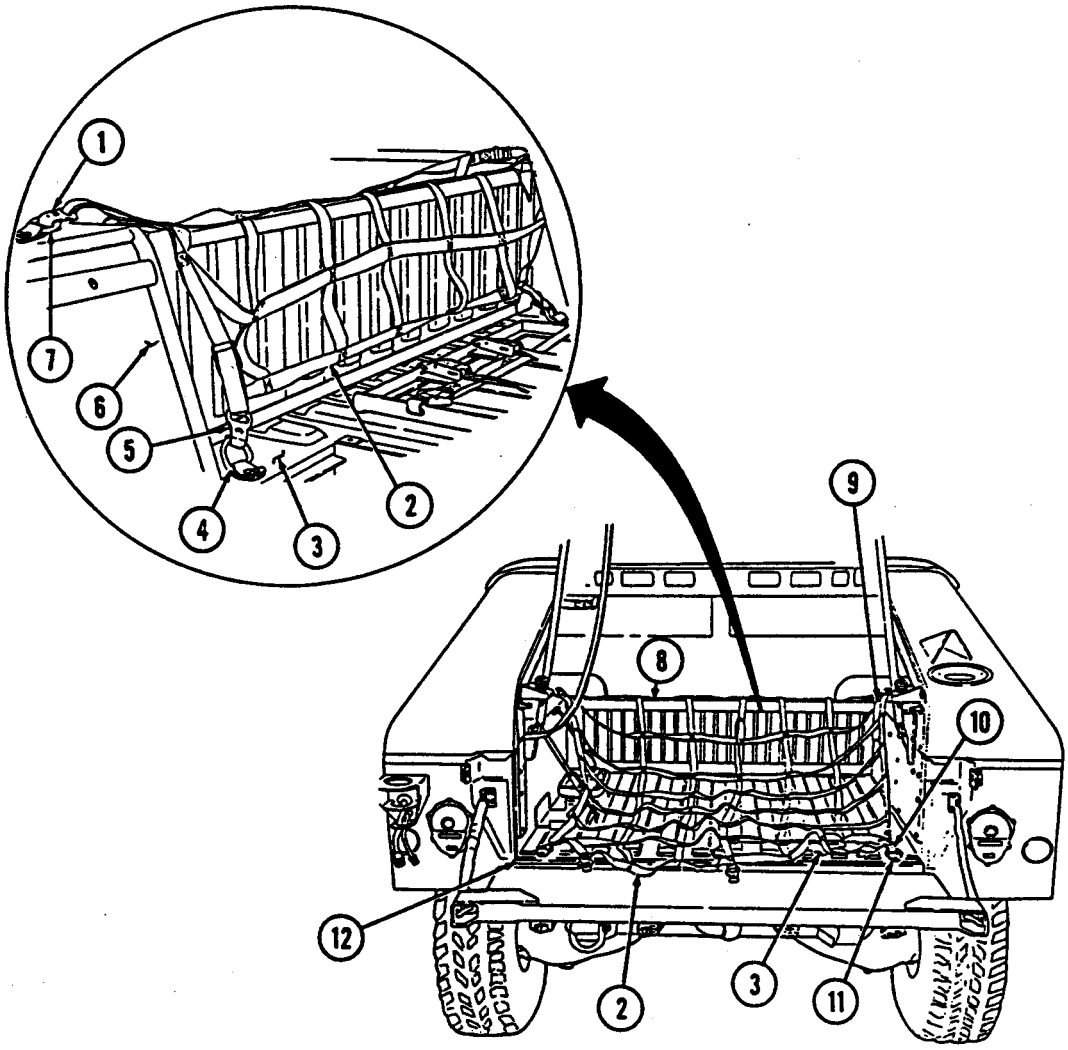

b. Installation of Cargo Barrier and Net.

(1) Position cargo barrier (8) into left and right channels (9) and slide cargo barrier (8) down to cargo floor (3).

CAUTION

If slack exists in stowage compartment net, attach two J-hooks to each D-ring at D-beam on cargo floor to ensure J-hooks are not damaged when closing tailgate.

NOTE

Prior to installing net, ensure four J-hooks are toward front of vehicle and six J-hooks are toward rear of vehicle.

(2) Position net (2) on cargo floor (3) and install two J-hooks (5) to D-rings (4) on cargo floor (3), two J-hooks (1) to D-rings (7) on left and right wheelhouse (6), and three J-hooks (10) to D-rings (11) on D-beam (12) on cargo floor (3).

(3) Pull adjustable strap (13) to remove slack from net (2).

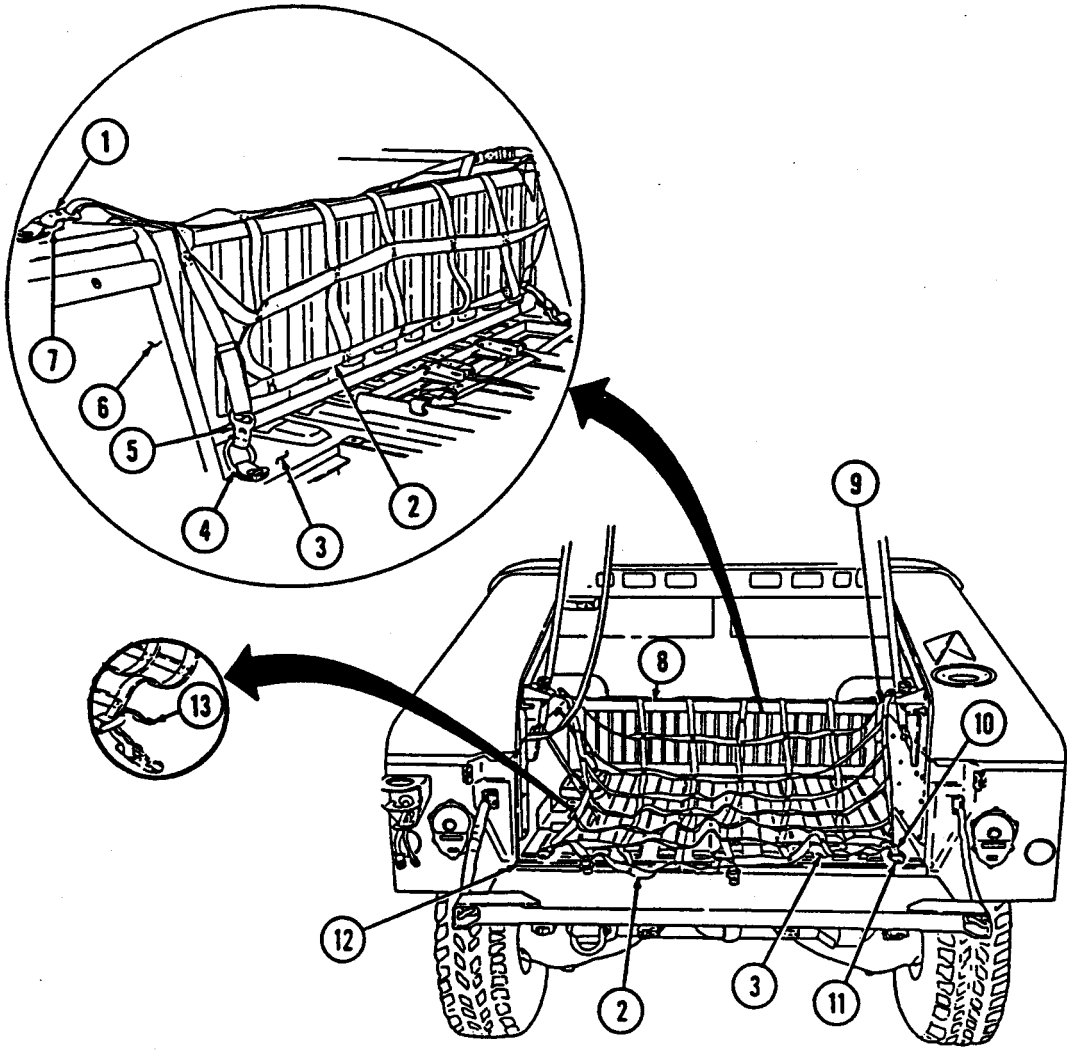

Section VI. TOW/ARMAMENT CARRIER OPERATION

2-52. GENERAL

a. This section provides operating instructions for components found on M966, M966A1, M1036, M1045, M1045A1, M1045A2, M1046, M1046A1, and M1121 TOW carriers and on M1025, M1025A1, M1025A2, M1026, M1026A1, M1043, M1043A1, M1043A2, M1044, and M1044A1 armament carriers.

b. Refer to para. 2-2a for stowage location of fire extinguisher on TOW and armament carriers. Refer to para. 2-27 for operation of fire extinguisher.

2-53. CARGO SHELL DOOR OPERATION

WARNING

Never open one end of the cargo shell door without first ensuring that the opposite end is securely closed. Not doing so may cause both ends to open at the same time, causing damage to equipment, mission abort, or injury to personnel.

a. General. The cargo shell door is a double-actuating door that pivots at either end. When door forward latch is released from inside vehicle, door opens rearward and functions as a TOW loader's door to facilitate mounting of TOW launcher, missile loading, and missile reloading. When door rear latch is released, door opens forward and permits access to cargo area from rear of vehicle for stowing the TOW launcher and equipment or ground mounting TOW launcher.

NOTE

For ease of operation, a grab-hold loop can be attached to the cargo door strap at the discretion of unit commander. Notify unit maintenance for installation of grab-hold loop.

b. Raising and Lowering Rear End of Cargo Shell Door.

(1) Turn locking device (6) to the lock position to ensure that forward end of cargo shell door (2) is locked. Pull door handle (1) upward and release. Push door (2) open, until door (2) will open automatically to FULL OPEN position.

(2) Pull on strap (3) to lower door (2) then slam shut. Ensure door (2) is locked by observing alignment of door surface with cargo shell surface side and bottom edges (4).

c. Raising and Lowering Forward End of Cargo Shell Door.

(1) Turn locking device (6) to unlock position and pull door forward latch (5) downward and release. Push door (2) open with grab handle (7) until door (2) will open automatically to full open position.

(2) Pull down on grab handle (7) to lower door (2), then pull shut. Ensure door (2) is locked by observing position of striker pins (8) and latch (9) engagement while pushing and pulling on grab handle (7).

(3) Turn locking device (6) to lock forward end of cargo shell door (2).

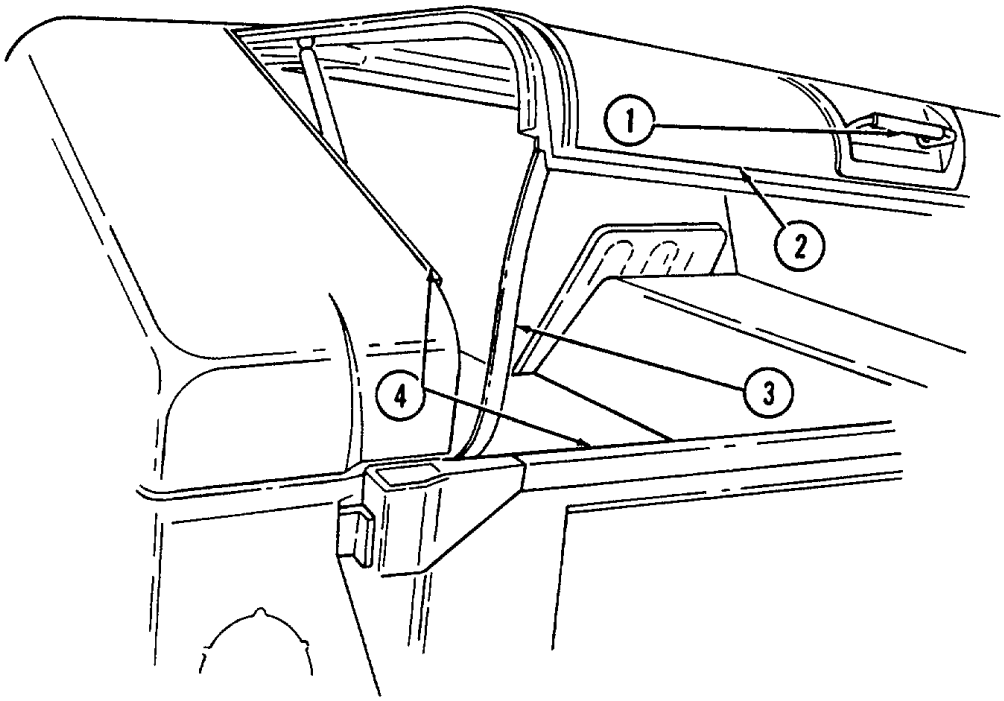
1
2
3
4

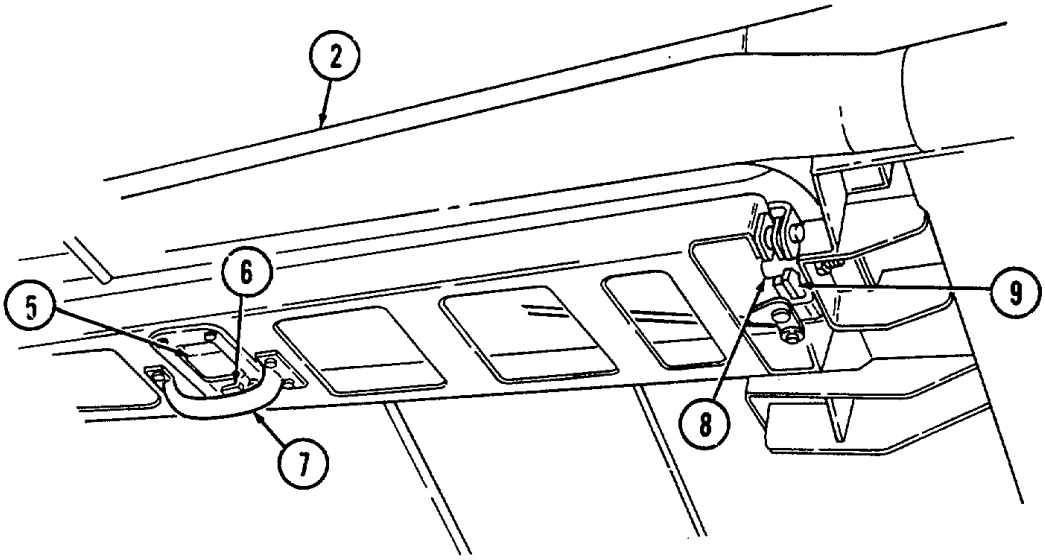
2
5
6
7
8
9

d. Cargo Shell Door Emergency Service.

NOTE

Should both ends of the cargo shell door open at the same time, a safety catch built into the rear latch mechanism will normally engage the rear strikers and prevent the door from slinging forward. Should this occur, procedures to reinstall the door are provided in steps 1 through 8. If door has separated from all four strikers, notify unit maintenance.

(1) Inspect the rear latch mechanism and ensure the rear strikers (2) have engaged the safety catch (3).

(2) Turn locking device (9), pull the cargo shell door forward latch (6) from inside the vehicle, and completely raise door (5).

(3) Release rear door latch locks (1), if locked.

(4) Grasp raised door (5) from rear of vehicle with both hands and pull right side of door (5) straight down. A distinctive latching sound should be heard.

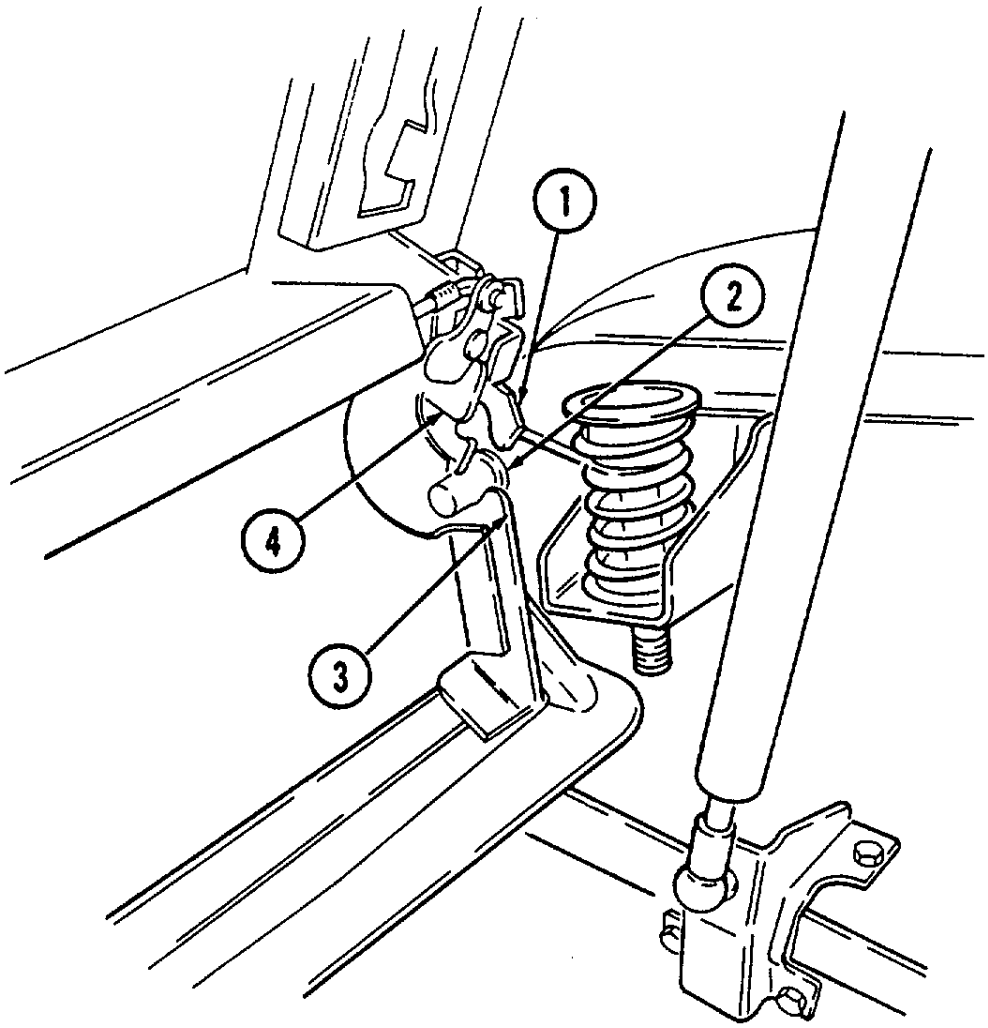

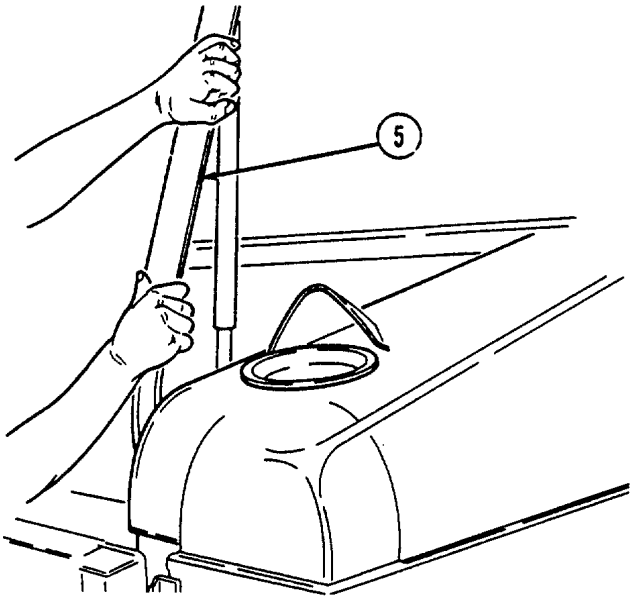

(5) Inspect right rear latch mechanism again to ensure striker (2) engagement with latch (4).
(6) Perform steps 3, 4, and 5 for left side of door.

(7) Enter vehicle, pull forward end of door (5) shut, and turn locking device (9). Inspect forward door latches (7) to ensure proper striker (8) engagement.
(8) Exit vehicle and raise door (5) from the rear. Operation of door (5) should be smooth. If operation is not smooth, or door components appear damaged, notify unit maintenance.

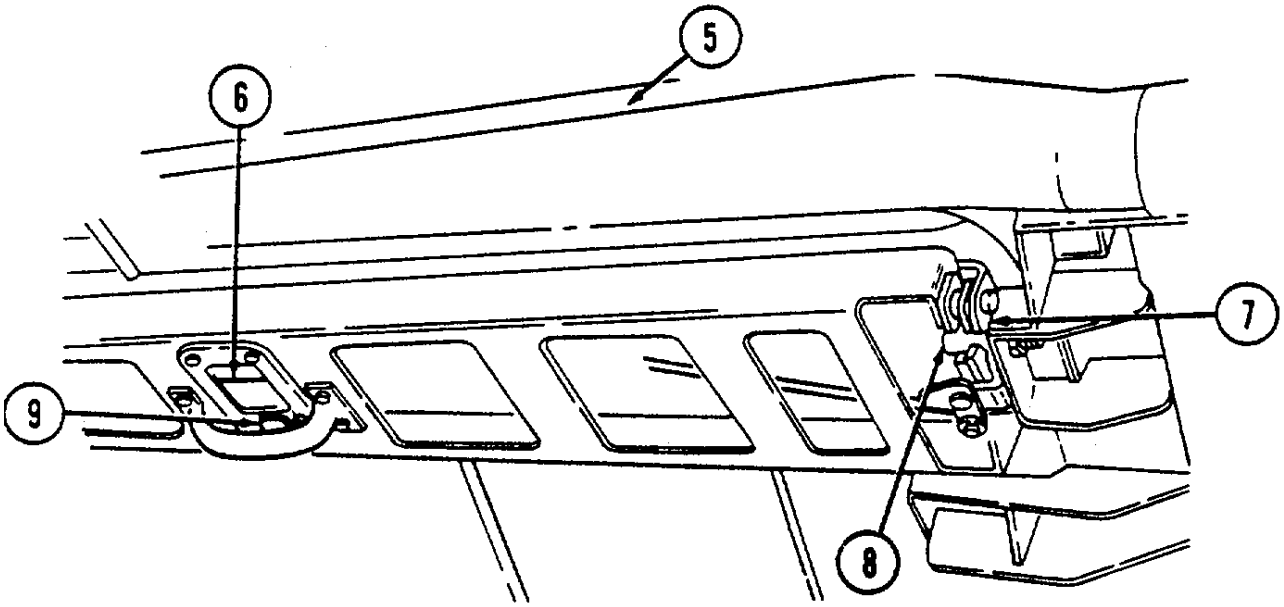

2-54. TOW WEAPON STATION OPERATION

a. Before Operation.

(1) Release three weapon station cover securing latches (2) and push weapon station cover (7) open using weapon station cover handle (8).
(2) Secure weapon station cover (7) in the open position with two retaining latches (5) and catches (6).
(3) Raise weapon station brake handle (4) to unlock weapon station (9).
(4) Use weapon station brake handle (4) and turret positioning handle (1) to rotate weapon station (9) to the desired azimuth.
(5) Lock weapon station (9) with brake handle (4).

CAUTION

Do not sit, stand, or place heavy objects on weapon station, tray, or cover. Components may bend, and damage to equipment will occur.

(6) Use gunner's sling (3) as seat rest or restraint if gunner is positioned in the weapon station during travel or weapon operation.
(7) Detach retaining pin (11) on weapon station pedestal mount cover (12) from hole in turret positioning handle (1) and open pedestal mount cover (12).
(8) Secure pedestal mount cover (12) to pedestal mount cover retainer (10).

b. After Operation.

(1) Detach pedestal mount cover (12) from pedestal mount cover retainer (10).
(2) Close pedestal mount cover (12) and secure retaining pin (11) to turret positioning handle (1).
(3) Remove two retaining latches (5) from catches (6).
(4) Close weapon station cover (7) and secure with three weapon station securing latches (2).

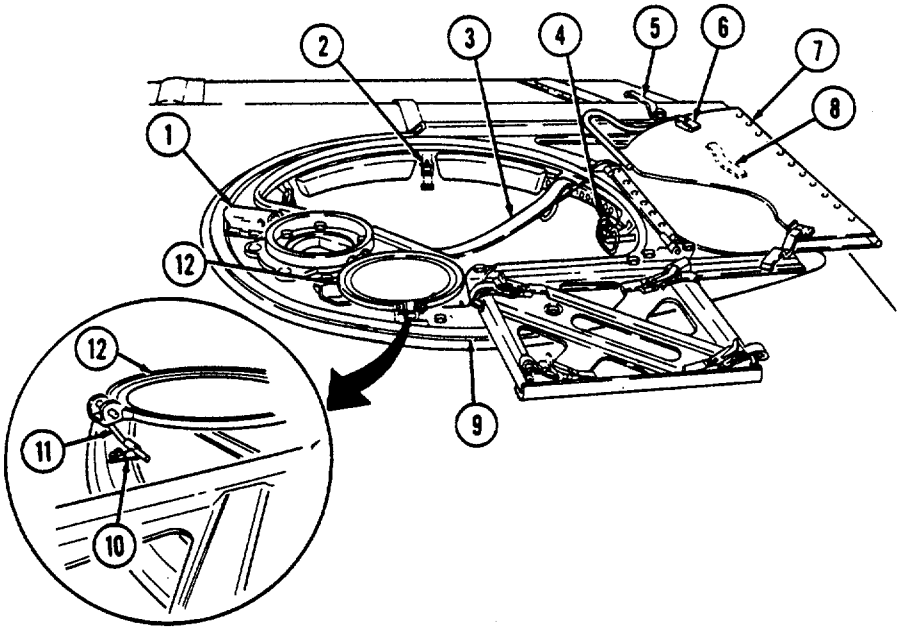

2-55. ARMAMENT WEAPON STATION OPERATION

a. Before Operation.

(1) Release three weapon station cover securing latches (2) and push weapon station cover (7) open using weapon station cover handle (8).

(2) Secure weapon station cover (7) in the open position with two retaining latches (5) and catches (6).

(3) Raise weapon station brake handle (4) to unlock weapon station (9).

(4) Use weapon station brake handle (4) and turret positioning handle (1) to rotate weapon station (9) to the desired azimuth.

(5) Lock weapon station (9) with brake handle (4).

CAUTION

Do not sit, stand, or place heavy objects on weapon station, tray, or cover. Components may bend and damage to equipment will occur.

(6) Use gunner's sling (3) as seat rest or restraint if gunner is positioned in the weapon station during travel or weapon operation.

b. After Operation.

(1) Remove two retaining latches (5) from catches (6).

(2) Close weapon station cover (7) and secure with three weapon station securing latches (2).

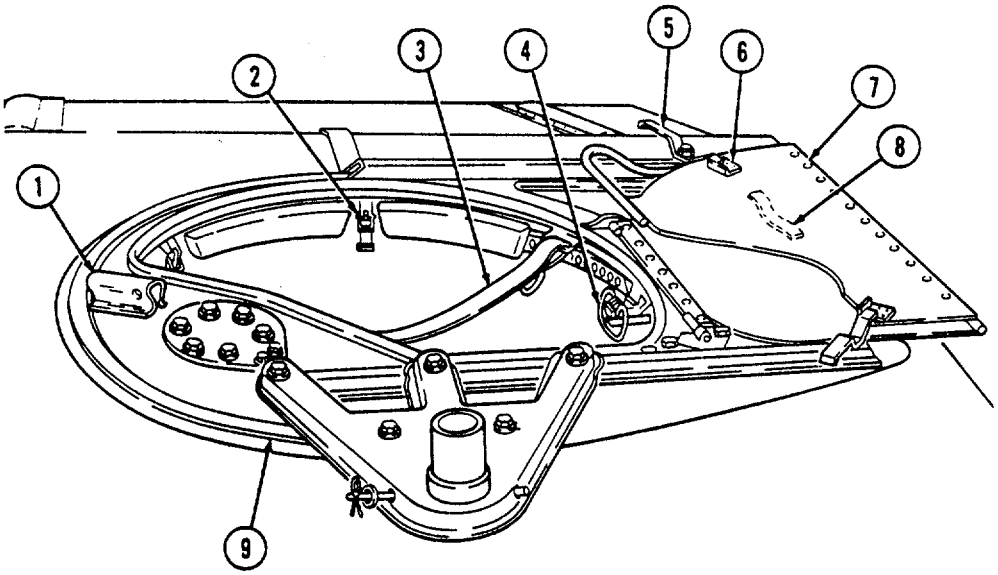

2-56. GUNNER'S PLATFORM OPERATION

a. Before Operation.

(1) Depress two lock buttons (6) on locking pins (5) and remove locking pins (5) from locking lugs (9) and holes (10) securing platform (1) in stowed position (14).

(2) Grasp hand hold (2) on platform (1) to lift platform (1) to either half-height position (13) or full-height position (12).

(a) If half-height position (13) is required, lift platform (1) all the way up, and turn two latches (7) so that ledges of latches (7) are facing up and parallel to bottom edge of platform (1). Lower platform (1) and allow to rest on ledges of latch (7) at half-height position (13). Insert locking pins (5) through forward locking holes (4) in platform (1) and holes (11) in platform risers (8).

(b) If full-height position (12) is required, lift platform (1) to the full-height position (12), and ensure that rear locking holes (3) in left and right sides of platform (1) are aligned with locking holes (11) in platform risers (8). Insert locking pins (5) through rear locking holes (3) in platform (1) and holes (11) in platform risers (8).

b. After Operation.

(1) Remove locking pins (5) securing platform (1) in either half-height position (13) or full-height position (12) by pressing lock buttons (6) and removing locking pins (5). Lift up on platform (1) and turn two latches (7) so that ledges of latch (7) are facing downward, parallel to floor.

(2) Lower platform to stowed position (14), and align locking holes (10) with locking lugs (9). Insert locking pins (5) through locking holes (10) and lugs (9).

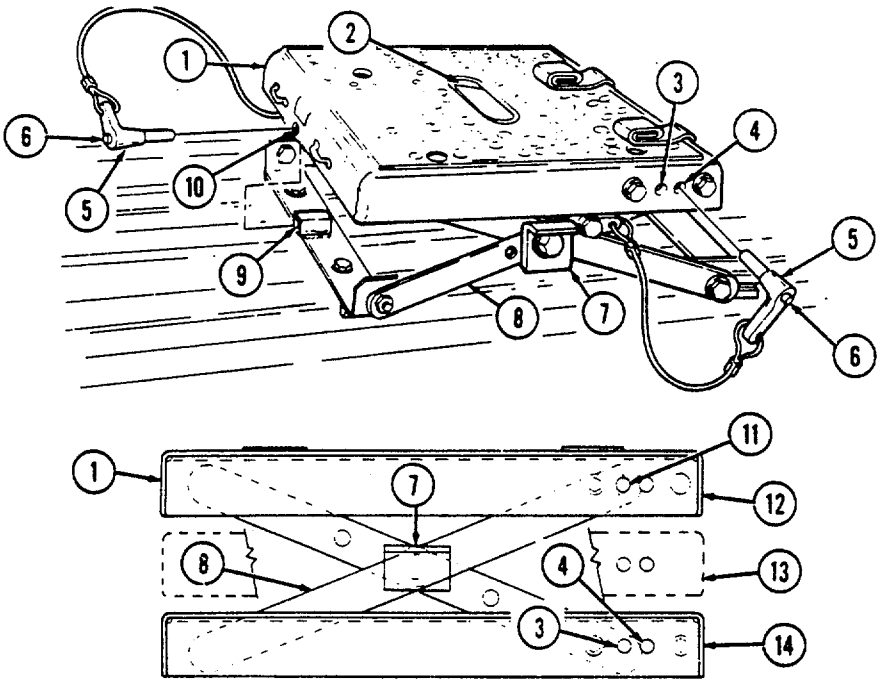

SECTION VII. AMBULANCE OPERATION

2-57. GENERAL

a. This section provides operating instructions for components found on M996, M996A1, M997, M997A1, M997A2, M1035, M1035A1, and M1035A2 ambulances.

b. Refer to para. 2-2a for stowage location of fire extinguisher on ambulance vehicles. Refer to para. 2-27 for operation of fire extinguisher.

WARNING

To prevent possible injury, insulation may be added to the exposed refrigerant lines of the air conditioner behind the companion seat, at the discretion of unit commander. Notify unit maintenance for installation of insulation.

2-58. SOFT TOP AMBULANCE (M1035, M1035A1, AND M1035A2) LITER RACK OPERATION

WARNING

When transporting more than one litter patient, first litter patient must be loaded on upper litter rack. Injury may result if litter patient is loaded in lower litter rack first.

a. Unloading Litters from Litter Rack.

(1) Release five straps (16) securing enclosure rear curtain (15) to tailgate (17).

(2) Roll up enclosure rear curtain (15) and secure with two straps (18).

(3) Lower tailgate (17) (para. 2-21).

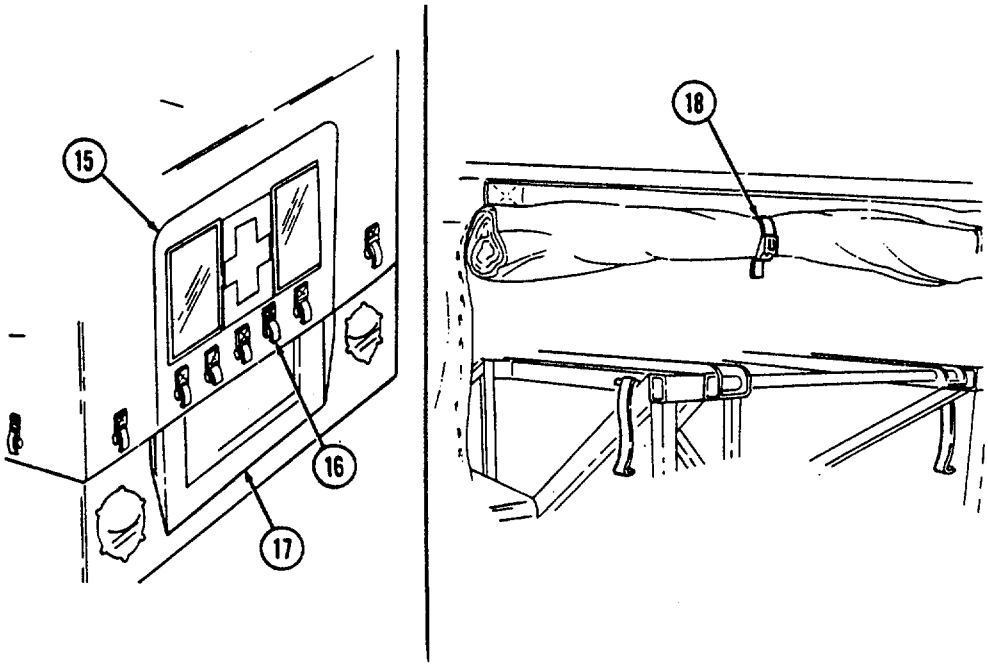

(4) Release four straps (3) securing litter (4) to lower litter rack (5).

(5) Pull out and remove litter (4) from lower litter rack (5).

(6) Release four straps (3) securing litter (10) to upper litter rack (8).

(7) Upper litter tray (7) must be pushed forward and raised slightly to allow stops (6) to clear notches (9) in upper litter rack (8).

(8) Pull upper litter tray (7) out from upper litter rack (8). Lower and rest upper litter tray (7) in lower litter rack (5).

(9) Remove litter (10) from upper litter tray (7).

b. Loading Litters on Litter Racks

NOTE

Ensure litter support legs are positioned behind stops on upper litter tray.

(1) Place litter (10) on upper litter tray (7).

(2) Slide litter (10) up until rear support legs (11) are positioned behind stops (12) on upper litter tray (7).

(3) Pull litter tray (7) up and push forward to lock litter tray (7) to upper litter rack (8).

(4) Secure litter (10) to upper litter rack (8) with four straps (3).

(5) Place litter (4) on lower litter rack (5) and slide forward.

(6) Secure litter (4) to lower litter rack (5) with four straps (3).

(7) Raise tailgate (14) (para. 2-21).

(8) Release two straps (2) and unroll enclosure rear curtain (1).

(9) Secure enclosure rear curtain (1) to tailgate (14) with five straps (13).

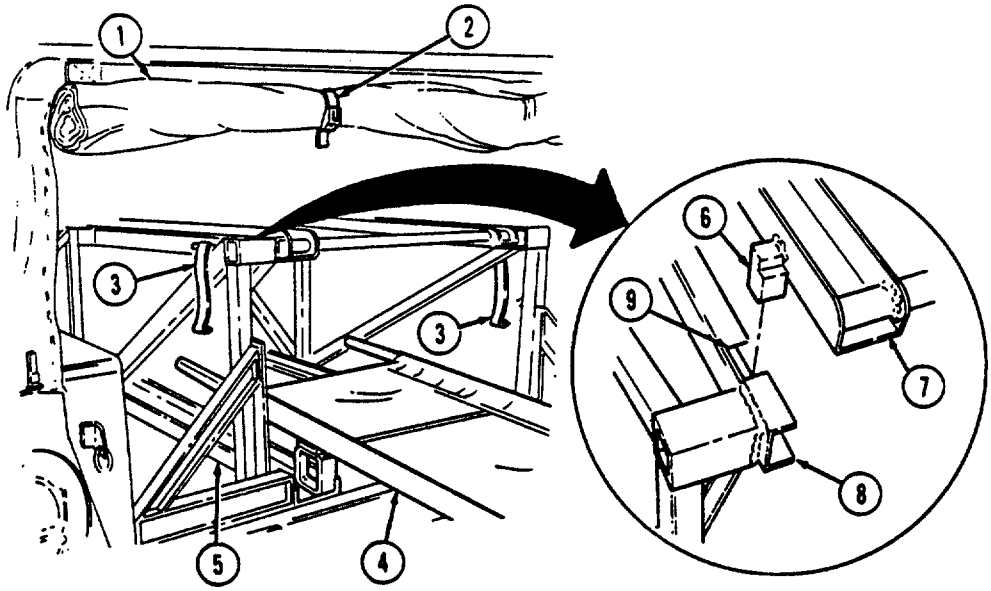

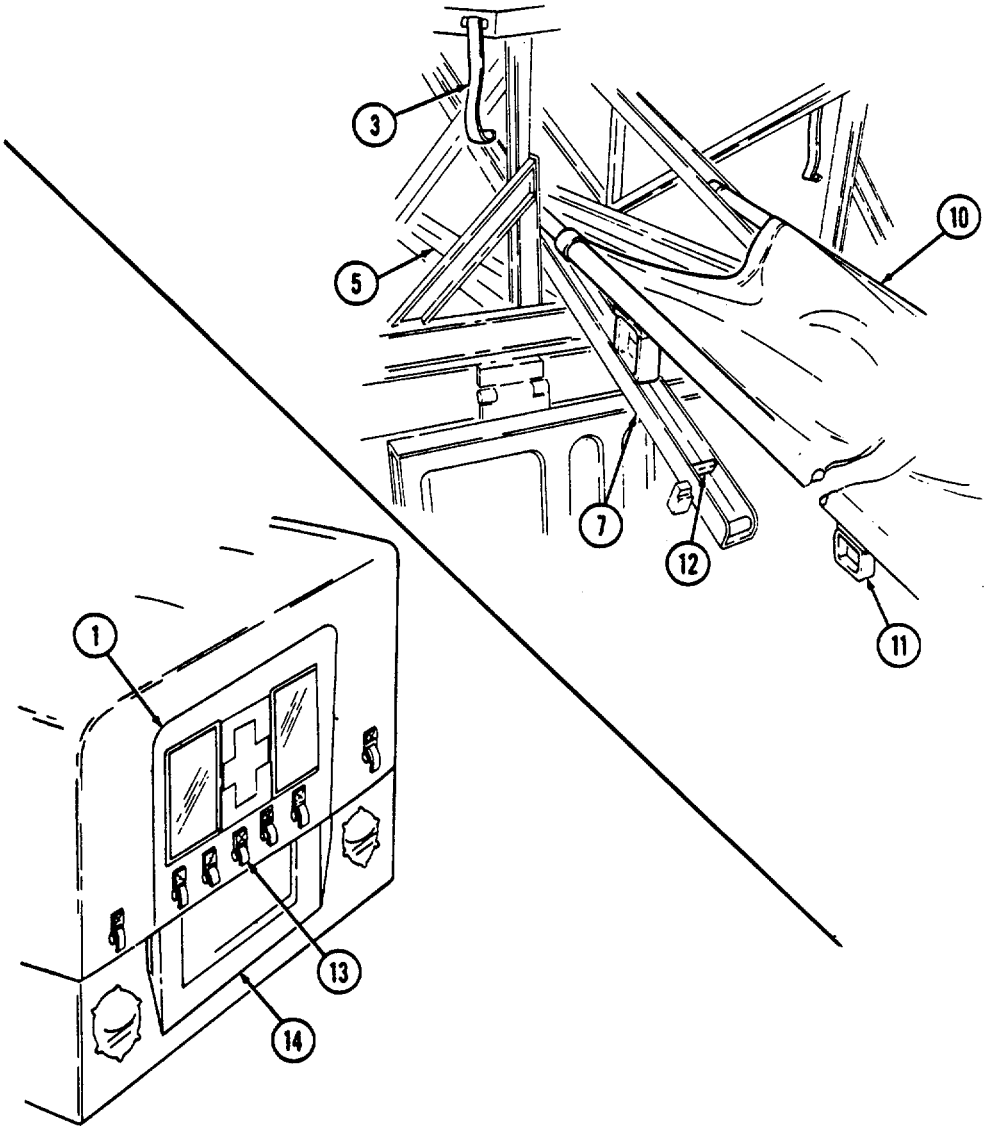

2-59. REMOVAL AND INSTALLATION OF SOFT TOP AMBULANCE (M 1035, M1035A1, AND M1035A2) ENCLOSURE

NOTE

For ease of installation, soft top components should be installed when temperatures are above 72°F (22°C).

a. General. The 2-litter ambulance soft top enclosure consists of four soft doors, roof cover, and bow assemblies. For removal of doors, refer to para. 2-46. Para. 2-59 covers removal and installation of roof cover, rails, bow assemblies, and rear bow.

b. Removal of Roof Cover, Rails, and Bow Assemblies.

(1) Unfasten eyelets (3) from turnbuttons (2) on two horizontal rails (6) and “A" pillar (1).

(2) Remove roof cover (7) from horizontal rails (6).

(3) Unfasten eyelets (3) from turnbuttons (2) on “C" pillar (5) and rear bow (8).

(4) Depress locking tabs (11) and unhook straps (14) from footman loops (13) on wheelhouse (10) and tailgate (9). Remove grommets (12) from foot-man loops (13).

(5) Roll roof cover (7) over rear bow (8) and lower rear bow (8).

(6) Roll roof cover (7) over "C" pillar (5) and "A" pillar (1).

(7) Slide roof cover (71 from channel (4).

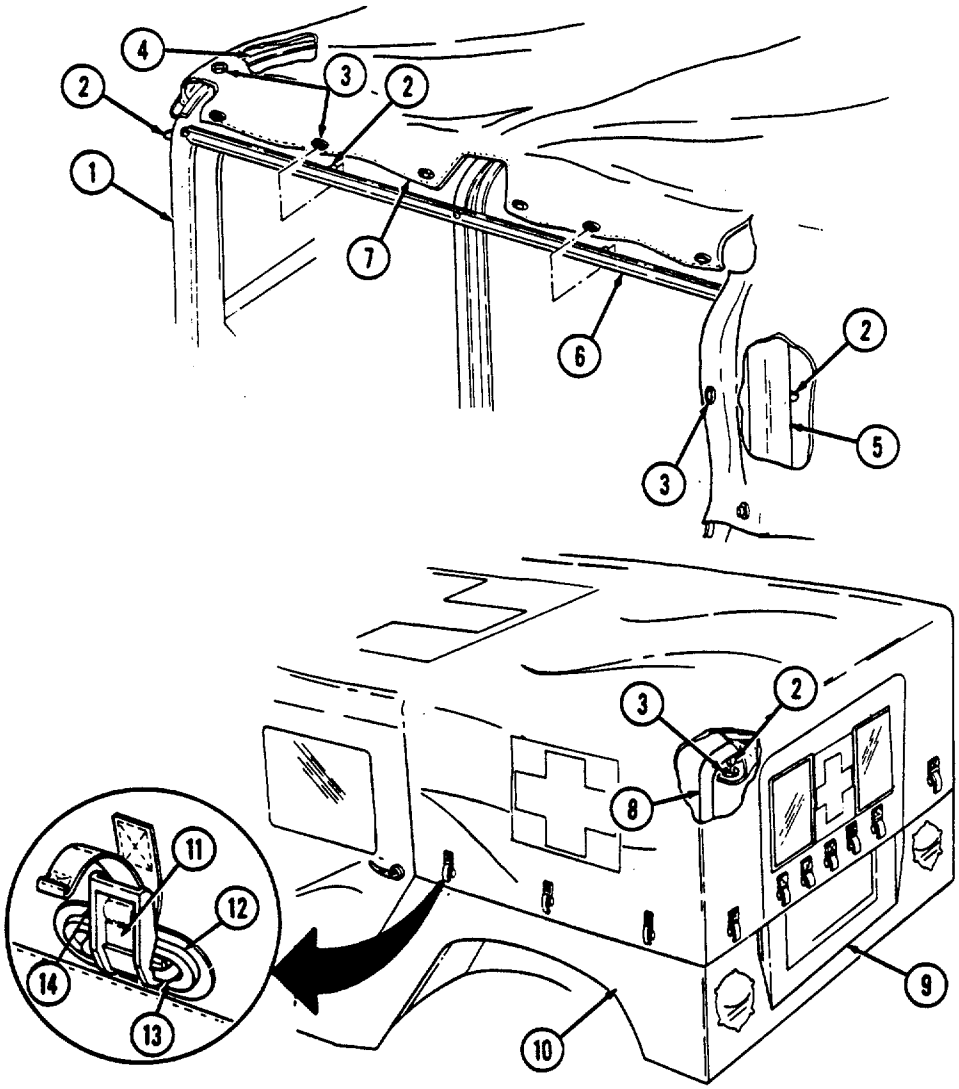

(8) Remove eight screws (17) securing two bow assemblies (15) to horizontal rails (6). Remove bow assemblies (15).

(9) Remove six screws (17) securing two horizontal rails (6) to "A" pillar (1), "B" pillar (16) and "C" pillar (5). Remove horizontal rails (6).

c. Removal of Rear Bow.

(1) Depress locking tabs (11) and unhook straps (14) from footman loops (13).

(2) Remove two snaprings (20) and pivot pins (18) securing rear bow (8) to pivot brackets (19). Remove rear bow (8).

d. Installation of Rear Bow.

(1) Install rear bow (8) to two pivot brackets (19) with two pivot pins (18) and snaprings (20).

(2) Install straps (14) to footman loop (13).

e. Installation of Rails, Bow Assemblies, and Roof Cover.

(1) Install two horizontal rails (6) to "A" pillar (1), "B" pillar (16), and "C" pillar (5) with six screws (17).

(2) Loosen end bracket screws (21) and install two bow assemblies (15) on horizontal rails (6) with eight screws (17). Tighten bracket screws (21).

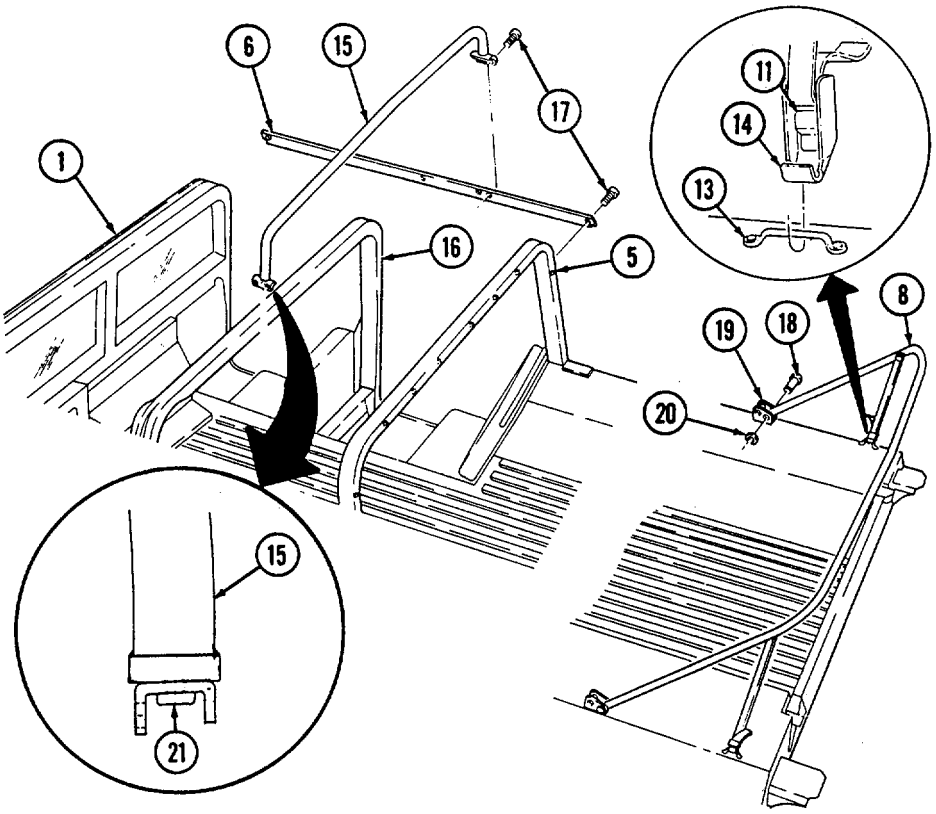

(3) Slide roof cover (4) into channel (3) and roll roof cover (4) over bow assemblies (7) and rear bow (9).

(4) Raise rear bow (9) and roll roof cover (4) over rear bow (9).

(5) Fasten eyelets (5) to turnbuttons (2) on rear bow (9).

(6) Install roof cover (4) around horizontal rails (6) and "C" pillar (8) and fasten eyelets (5) to turnbuttons (2).

(7) Fasten eyelets (5) to turnbuttons (2) on “A" pillar (1).

(8) Install grommets (10) over footman loops (11), attach straps (12) to footman loops (11), and pull straps (12) tight.

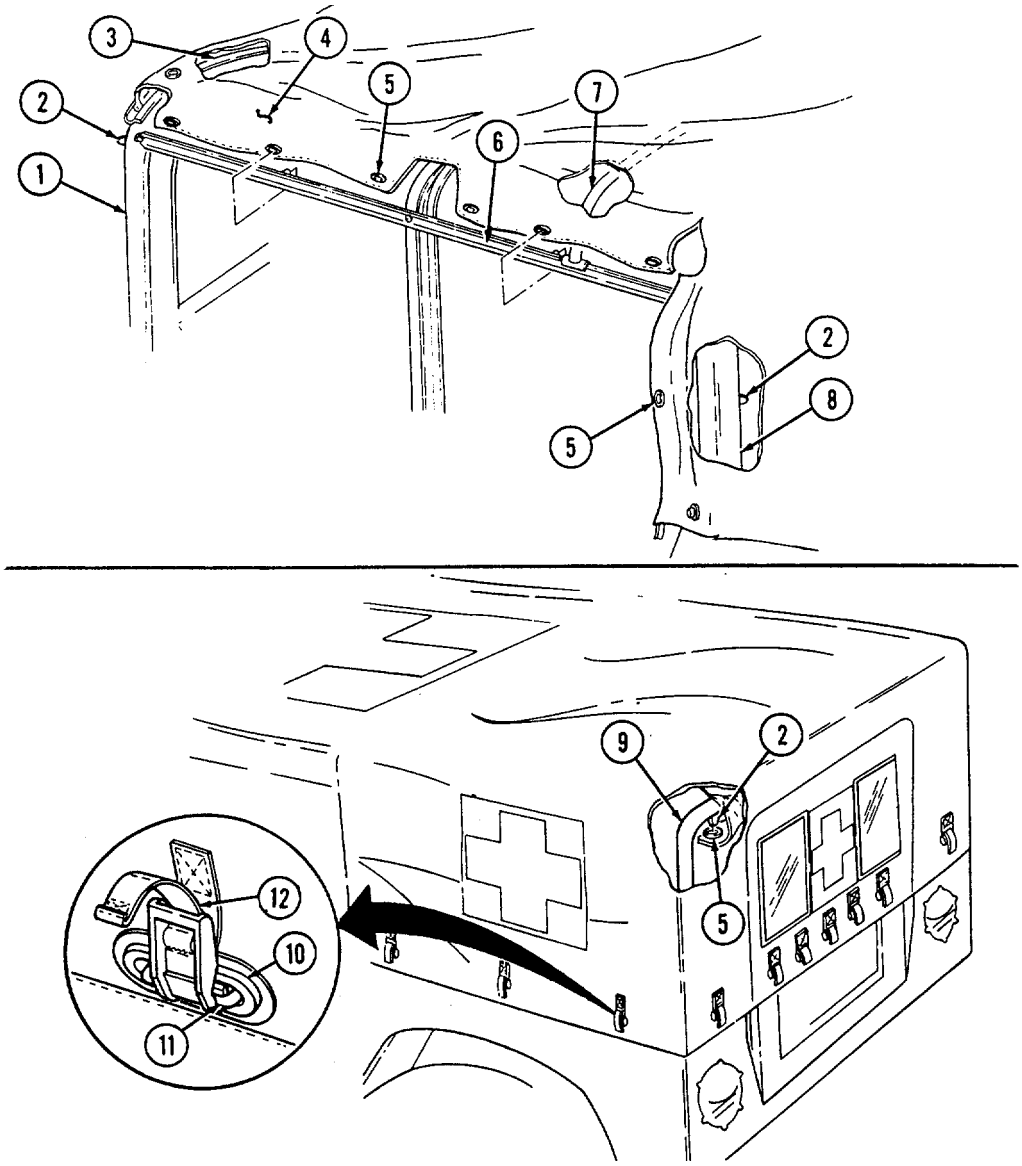

2-60. AMBULANCE REAR STEP ASSEMBLY OPERATION

a. Lowering Rear Steps.

(1) Open and secure rear doors.

(2) Ensure that the rear step safety strap (13) is connected to the rear step assembly (20).

(3) Pull rear step latch cable (16) to release rear step latches (15).

WARNING

Personnel inside vehicle should not lean on rear step assembly while unlatching and disconnecting rear safety strap. Injury to personnel may result from rapidly falling steps.

(4) While grasping bottom step (17) with one hand, disconnect safety strap (13) from hole (18) on rear step assembly (20).

(5) Lower rear step assembly (20) by releasing bottom step (17).

(6) Turn knob (19) clockwise to secure bottom step (17).

b. Raising Rear Steps.

(1) Turn knob (19) counterclockwise and raise bottom step (17).

(2) Lift rear step assembly (20) until rear step latches (15) engage with rear step strikers (14).

(3) Connect step safety strap (13) to hole (18) on rear step assembly (20).

(4) Close and secure rear doors.

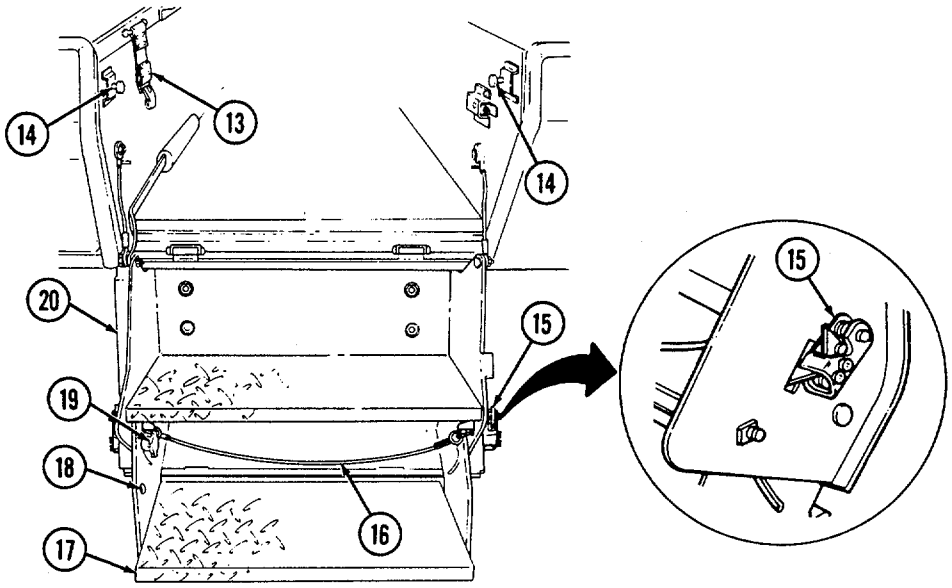

2-61. AMBULANCE INTERIOR ELECTRICAL CONTROLS

a. General. The vehicle electrical system is used to power the NBC air filtration system, interior lights, heater, air-conditioner, and ventilation system. It is recommended to have engine running while operating the heater, vent, and NBC air filtration system so the alternator maintains battery charge. The engine must be running to operate the air-conditioner compressor.

NOTE

- Electrical control panels on M996, M996A1, M997, M997A1, and M997A2 ambulances are basically the same (M997 is shown).
- To facilitate blackout operations, M996, M996A1, M997, M997A1, and M997A2 ambulance interior lighting systems have been designed so that all white light illumination in the patient compartment will be extinguished when bulkhead doors, rear doors, or rear steps are opened unless the vehicle main light switch is in “SERVICE DRIVE" position.

b. White Light Operation.

(1) Place interior light switch (1) on electrical control panel (3) in "NORMAL" position. The blackout lights will illuminate.

(2) Close bulkhead doors, rear doors, and steps. Ceiling white lights will illuminate and blackout lights will extinguish.

(3) To activate spotlights, engage switch on back of spotlight assembly.

(4) If bulkhead doors, rear doors, or rear steps are opened, all white light illumination will be extinguished and blackout lights will be illuminated.

(5) Turn vehicle main light switch to “SERVICE DRIVE" to operate interior white lights when bulkhead doors, rear doors, or rear steps are open and blackout operation is not required.

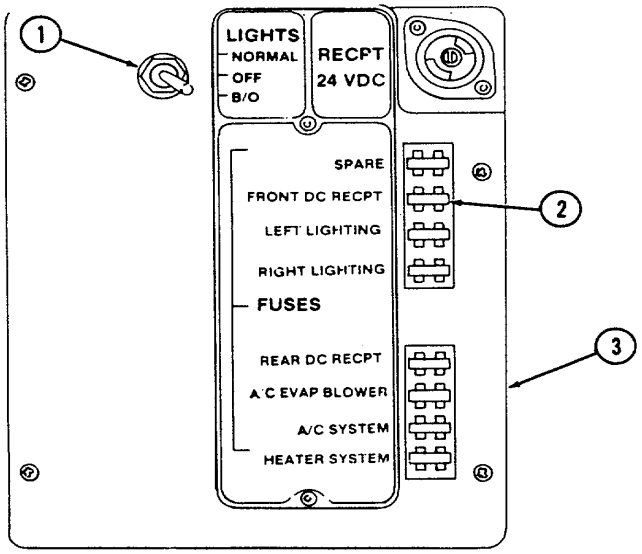

c. Blackout Light Operation. Place interior light switch (1) in "B/O" position. Blackout lights will illuminate.

NOTE

Blackout position on the electrical control panel overrides the automatic blackout switches in the event of automatic blackout switch failure in blackout conditions.

d. Interior Light Operation. Place interior light switch (1) in "OFF" position to extinguish all interior lights.

e. Fuse Replacement. To replace a defective fuse (2) in the electrical control panel (3), pull fuse (2) straight out of panel (3). Inspect fuse (2) for an open fuse element (5). Replace with known good fuse (4). All fuses in the control box are 20 amp.

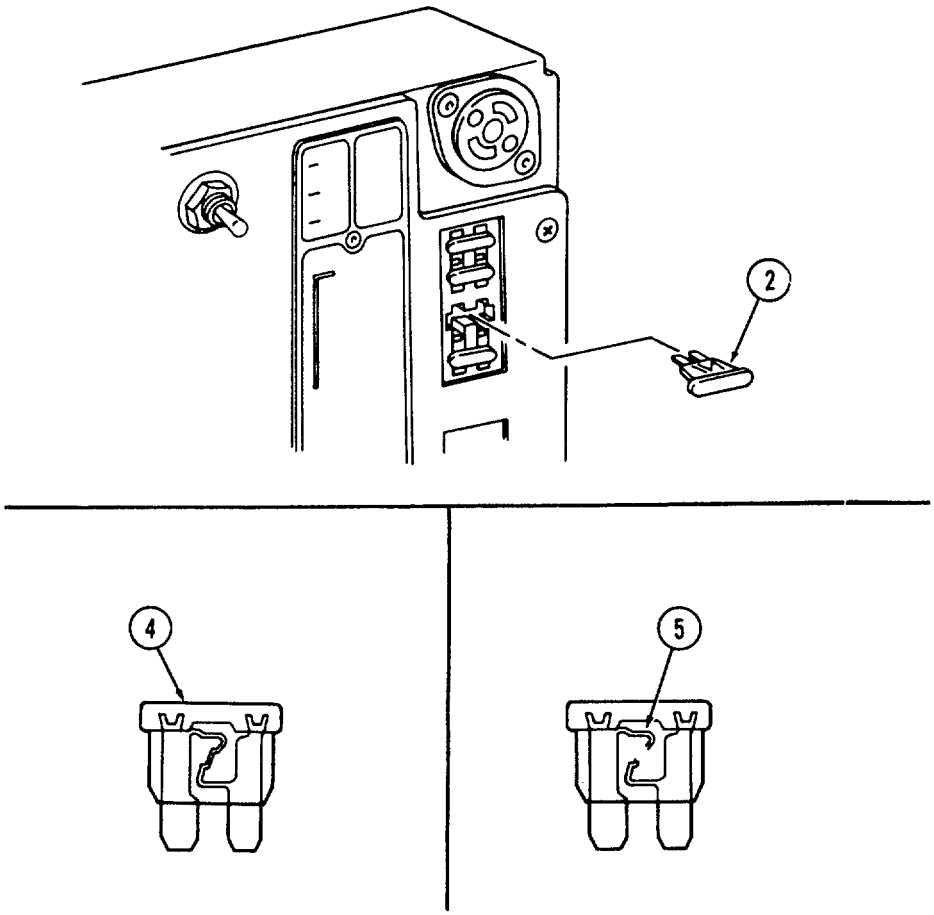

NOTE

- Prior to starting ambulance heater, ensure that vehicle fuel gauge registers above 1/4 full. If heater is operated with fuel level below 1/4, the heater may shut off and not restart. This feature is to ensure that vehicle remains operational. If heater will not restart, notify unit maintenance to refill tank and bleed heater fuel system.
- Normal start-up time for M996, M996A1, M997, M997A1, and M997A2 ambulance heaters is approximately 2-1/2 minutes. Time may vary depending on amount of use.

f. M996 and M996A1 Heater Operation.

WARNING

Do not operate heater when ventilation system is on. Damage to heater, or injury to personnel will result.

(1) To operate heater, ensure fuel cutoff valve (14) is open and place vent off-on-max lever (5) to "OFF." Hold heater run-start switch (2) to "START" until heater light (1) illuminates to show that heater burner is operating.

(2) When heater light (1) illuminates, position heater run-start switch (2) to “RUN."

(3) Outlet air temperature can be adjusted by positioning fuel selection switch (3) to either "HIGH" or “LOW."

(4) To turn heater off, position heater run-start switch (2) to “OFF." It will take several minutes for heater to purge itself of fuel.

g. M996 and M996A1 Vent Operation.

(1) To operate ventilation system, position on-off-max lever (5) to "ON." The proportion of fresh air entering patient compartment can be adjusted by the following:

(a) Position fan control switch (4) to “HIGH”, “MED”, or “LOW."

(b) Adjust off-on-max lever (5) to the right to increase proportion of fresh air entering the system.

(c) Open rear door vent to enable it to function as an exhaust vent.

(2) To turn ventilation system off, place on-off-max lever (5) to "OFF."

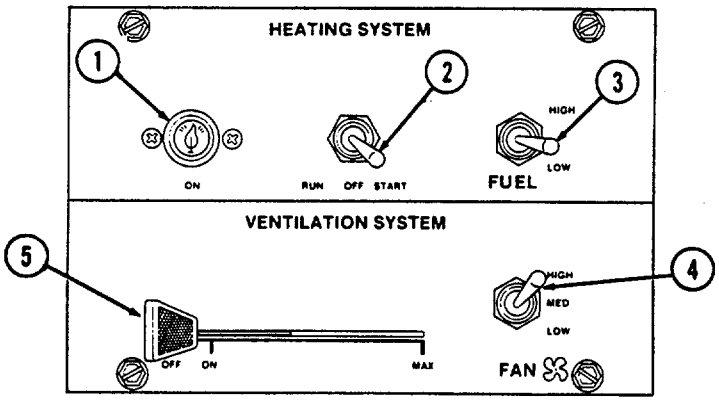

h. M997, M997A1, and M997A2 Heater Operation.

(1) To operate the heater, ensure fuel cutoff valve (14) is open and place A/C vent-heat lever (6) in "HEAT" position.

(2) Adjust the inside-outside air lever (7) to "HEAT MAX" or "HEAT NORMAL."

(3) Position fuel selection switch (9) to "LOW."

(4) Hold heater run-start switch (10) to "START" position until heater light (11) illuminates to show that heater burner is operating. When heater light (11) illuminates, position the heater run-start switch (10) to "RUN."

(5) Outlet air temperature can be adjusted by positioning the fuel selection switch (9) to either "HI" or "LOW," the fan switch (13) to "LO," "MED," or "HI," and the inside-outside air lever (7) to either "HEAT MAX" or "HEAT NORMAL."

(6) To turn the heater off, position the heater run-start switch (10) to "OFF." It will take several minutes for the heater to purge itself of fuel. After heater light (11) goes off, move inside-outside air lever (7) to "UNIT-OFF."

i. M997, M997A1, and M997A2 Air-Conditioner Operation.

(1) Start engine (para. 2-10).

(2) To operate the air-conditioner, position the A/C vent-heat lever (6) to "A/C."

(3) Adjust the inside-outside air lever (7) to "A/C MAX" or "A/C NORMAL."

(4) Set A/C off-on switch (12) to "ON."

(5) Adjust A/C cold control (8) clockwise to "COLD."

(6) Outlet air temperature can be adjusted with A/C cold control (8) by rotating the control (8) between "OFF" and "COLD," the fan switch (13) to "LO", "MED," or "HI," and the inside-outside air lever (7) to "A/C MAX" or "A/C NORMAL."

(7) To turn air-conditioner off, position the A/C switch (12) to "OFF" and move inside-outside air lever (7) to UNIT-OFF".

j. M997, M997A1, and M997A2 Vent Operation.

(1) To operate ventilation system without heating or cooling incoming air, place A/C vent-heat lever (6) and inside-outside air lever (7) in "VENT" position.

(2) Activate fan switch (13) to "LO," "MED," or "HI."

(3) To turn ventilation system off, place inside-outside air lever (7) in "UNIT-OFF" position.

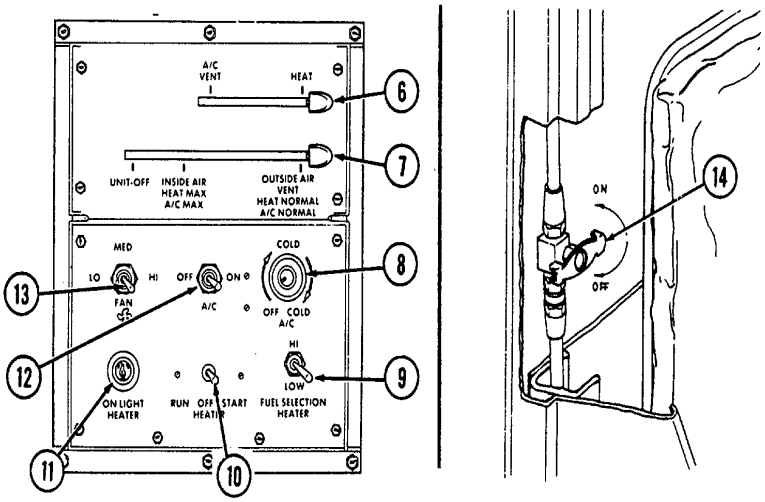

2-62. AMBULANCE LITTER RACK OPERATION

a. Assembling Litter Rail Extension.

(1) Turn latch (1) counterclockwise and open stowage compartment door (2).

(2) Loosen and disconnect securing strap (7) and remove folded litter rail extension (6) from stowage compartment (5).

NOTE

Perform step 3 for M997, M997A1, and M997A2 vehicles. M996 and M996A1 litters are stowed behind right ambulatory patient seat.

(3) Lift tray (3) slightly and push in tray supports (4) to lower tray (3) for access to stowed litters.

(4) Pull left and right rails (8) apart and let legs (13) drop down. Ensure feet (14) are flat on ground.

(5) Lock support braces (15), and adjust straps (16) as necessary.

b. Unloading Litters from Lower Litter Rack.

WARNING

- When unloading more than two litter patients, lower litter rack patients must be unloaded first. Injury may result if upper litter rack patients are unloaded first.
- Make sure straps and equipment do not inhibit unloading operations. Unload litters carefully to prevent patient injury.

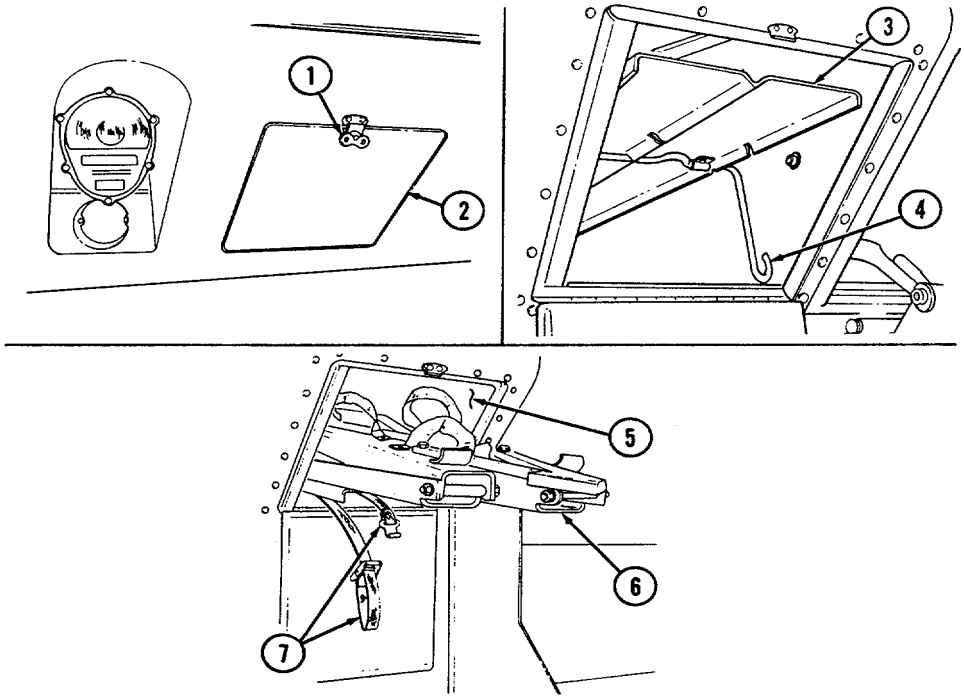

(1) Release front and rear litter handle straps (10) securing litter (9) to lower litter rack (11).

(2) Secure both rails (8) of litter rail extension (6) into slots (12) on lower litter rack (11).

(3) Slide litter (9) from lower litter rack (11) onto litter rail extension (6). Lift up and remove litter (9) from litter rail extension (6).

c. Loading Litters on Lower Litter Rack.

WARNING

When loading more than two litter patients, upper litter rack patients must be loaded first. Injury may result if litter patients are loaded in lower litter rack first.

(1) Place litter (9) on litter rail extension (6).

WARNING

Ensure straps and equipment do not inhibit litter loading operations. Load litters carefully to prevent patient injury.

(2) Slide litter (9) onto lower litter rack (11).

(3) Secure litter (9) to lower litter rack (11) with front and rear litter handle straps (10).

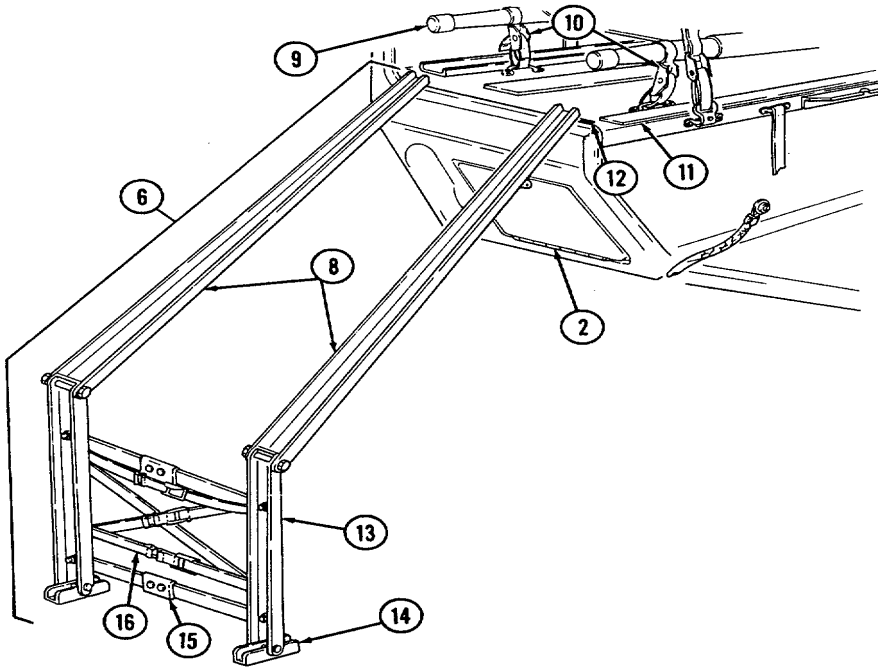

d. Unloading Litters from Upper Litter Racks.

WARNING

When unloading more than two litter patients, lower litter rack patients must be unloaded first. Injury may result if upper litter rack patients are unloaded first.

(1) Release front litter handle straps (5) from litter handles (6).
(2) Unhook tension strap (9) from footman loop (7) on lower litter rack (8).
(3) Pull out upper litter rack handle (11) and support weight of upper litter rack (4).

WARNING

Rear end of upper litter must be supported before releasing suspension strap hook. Injury to personnel may result if rear end of upper litter is not supported.

(4) Unhook rear suspension strap hook (3) from loop (10) on upper litter rack (4). Clip suspension strap hook (3) to eye (2).

(5) Release litter support latch stop (13), push latch (12) in, and lower upper litter rack (4) onto lower litter rack (8).

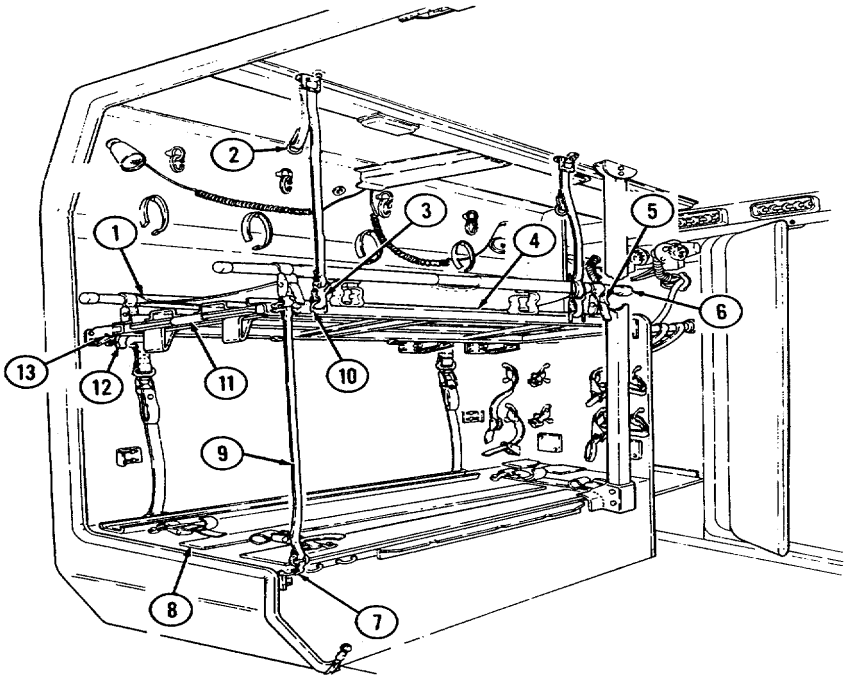

(6) Slide litter rack handle (11) into upper litter rack (4).
(7) Secure rails of litter rail extension (14) into slots in upper litter rack (4).
(8) Release rear litter handle straps (5) from litter handles (6).
(9) Slide litter (1) down rails (14) until litter (1) is clear of upper litter rack (4).
(10) Lift and remove litter (1) from litter rail extension (14).
(11) Remove litter rail extension (14) from upper litter rack (4).

e. Loading Litters on Upper Litter Racks.

WARNING

When loading more than two litter patients, upper litter rack patients must be loaded first. Injury may result if litter patients are loaded in lower litter rack first.

(1) Secure both rails of litter rail extension (14) into slots in upper litter rack (4).
(2) Place litter (1) on litter rail extension (14).
(3) Slide litter (1) up rails (14) until litter (1) is clear of litter rail extension (14).
(4) Secure rear litter handles (6) to upper litter rack (4) with rear litter handle straps (5).
(5) Remove litter rail extension (14) from upper litter rack (4).
(6) Unhook suspension strap hook (3) from eye (2).
(7) Pull out upper litter rack handle (11).
(8) Raise upper litter rack (4), push into litter support latch (12), and secure with latch stop (13).
(9) Attach suspension strap hook (3) to loop (10) on upper litter rack (4).
(10) Secure front litter handles (6) to litter rack (4) with front litter handle straps (5).
(11) Hook tension strap (9) to footman loop (7) on lower litter rack (8).
(12) Slide litter rack handle (11) into upper litter rack (4).

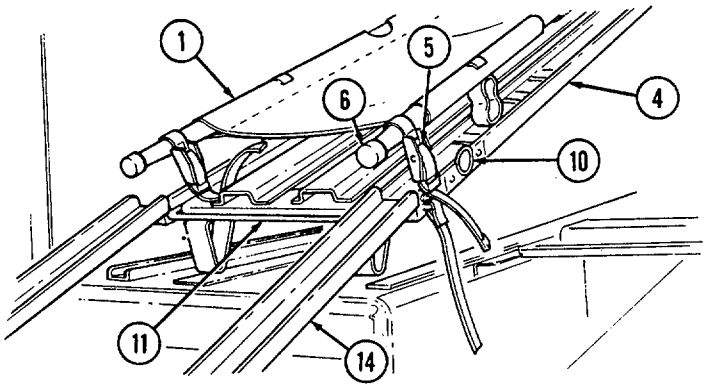

f. Folding Upper Litter Rack to the Backrest Position.

(1) Unhook litter rack tension strap (10) from lower litter rack footman loop (8).

(2) Unhook two upper litter rack suspension straps (4) from loops (2) on upper litter rack (1) and hook strap ends (5) to eyes (3).

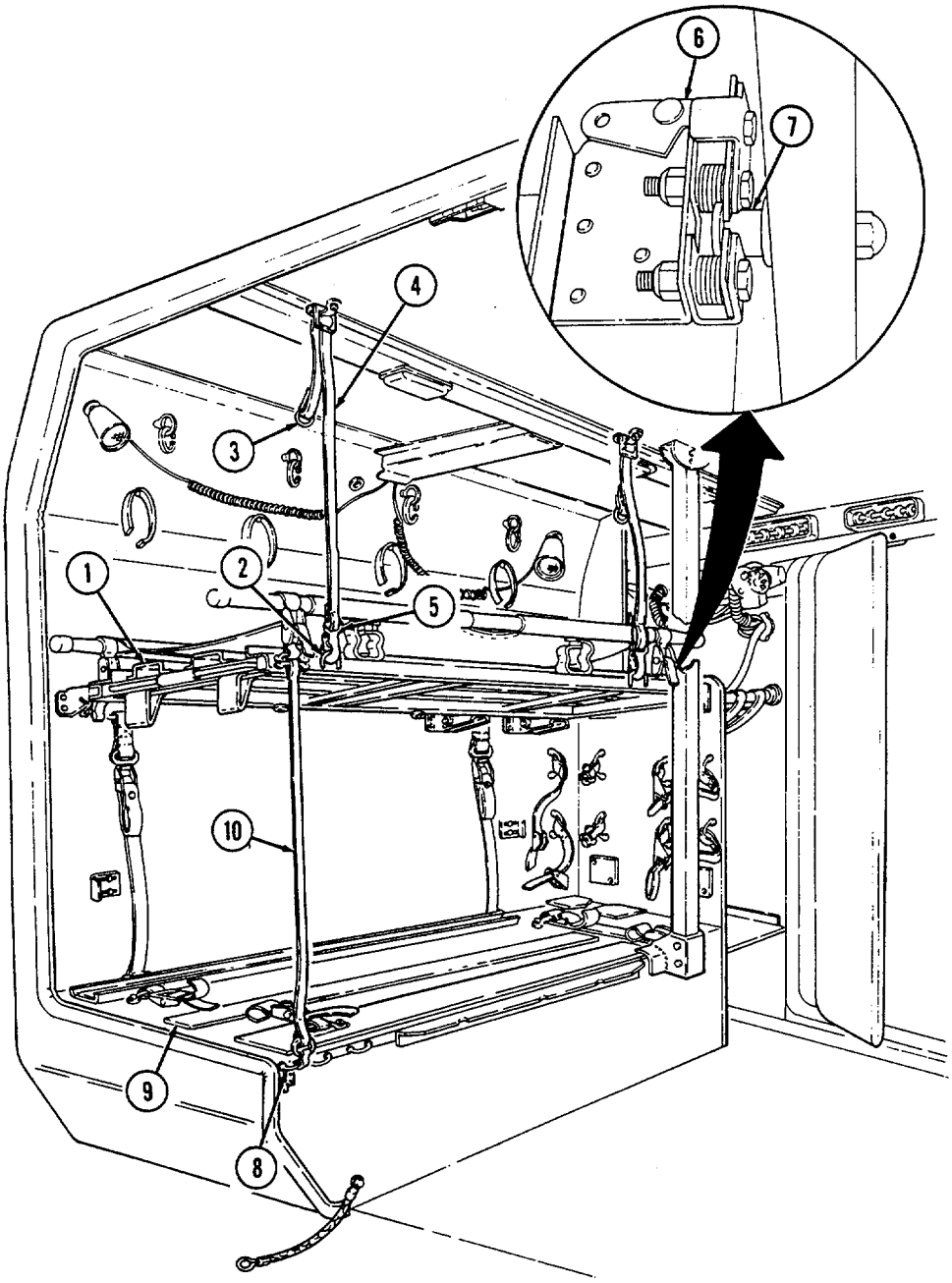

(3) Release upper litter rack latch (6) and disengage rack striker (7) from latch (6).

(4) Lower upper litter rack (1) onto the lower litter rack (9) forming a backrest.

(5) To convert backrest to upper litter rack (1), raise upper litter rack (1) and engage rack striker (7) into upper litter rack latch (6). Ensure striker (7) is locked in latch (6).

(6) Unhook two upper litter rack suspension strap hooks (5) from eyes (3) and hook to loops (2) on upper litter rack (1).

(7) Hook upper litter rack tension strap (10) to footman loop (8) on lower litter rack (9).

(8) Adjust straps (10) and (4) for proper tension.

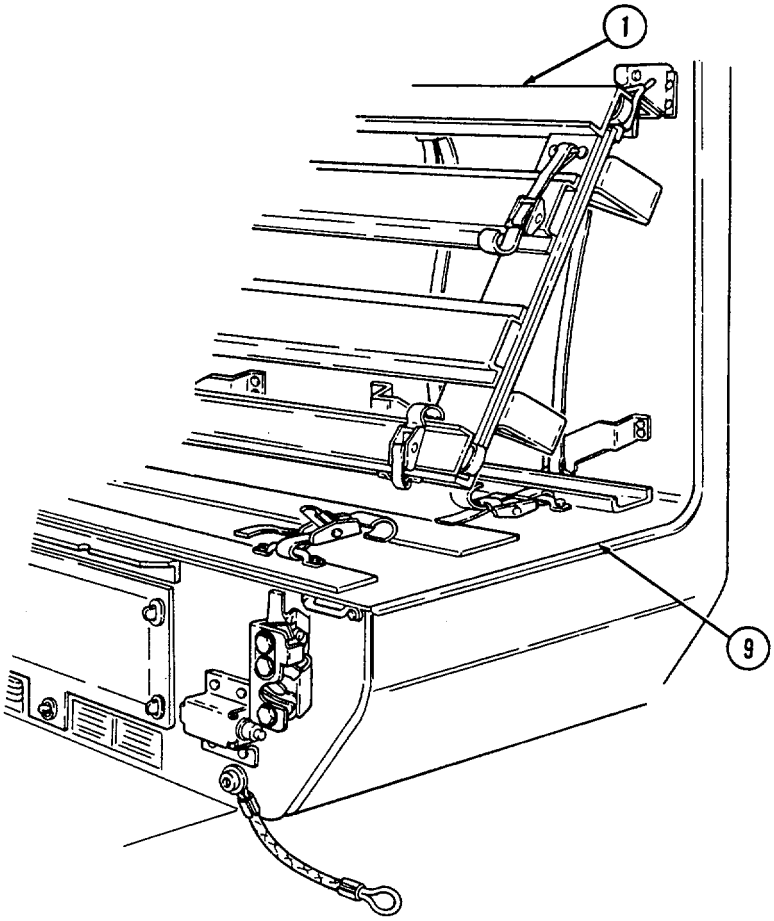

g. Fold and Stow Litter Rail Extension.

(1) Unlock support braces (6).
(2) Fold left and right rails (2) together.
(3) Fold left and right litter rail legs (4) and feet (5) against rail (2).
(4) Lift tray (7), push tray supports (8) in, and lower tray (7).

NOTE

Perform step 5 for M997, M997A1, and M997A2 vehicles only. M996 and M996A1 litters are stowed behind right ambulatory patient seat.

(5) Slide litters into stowage compartment (9) on top of lift tray (7). Pull out supports (8) to place lift tray (7) in raised position.
(6) Place folded litter rail extension (1) into stowage compartment (9) and secure with strap (10).
(7) Close door (3) and turn latch (11) clockwise to secure door (3).

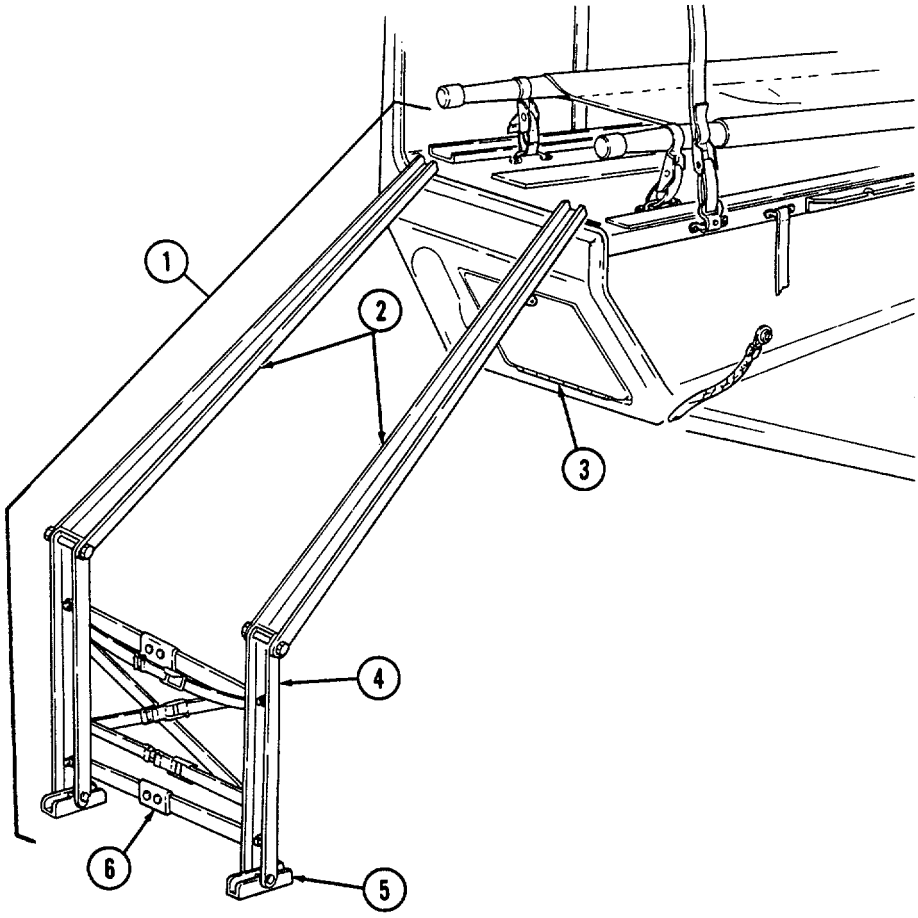

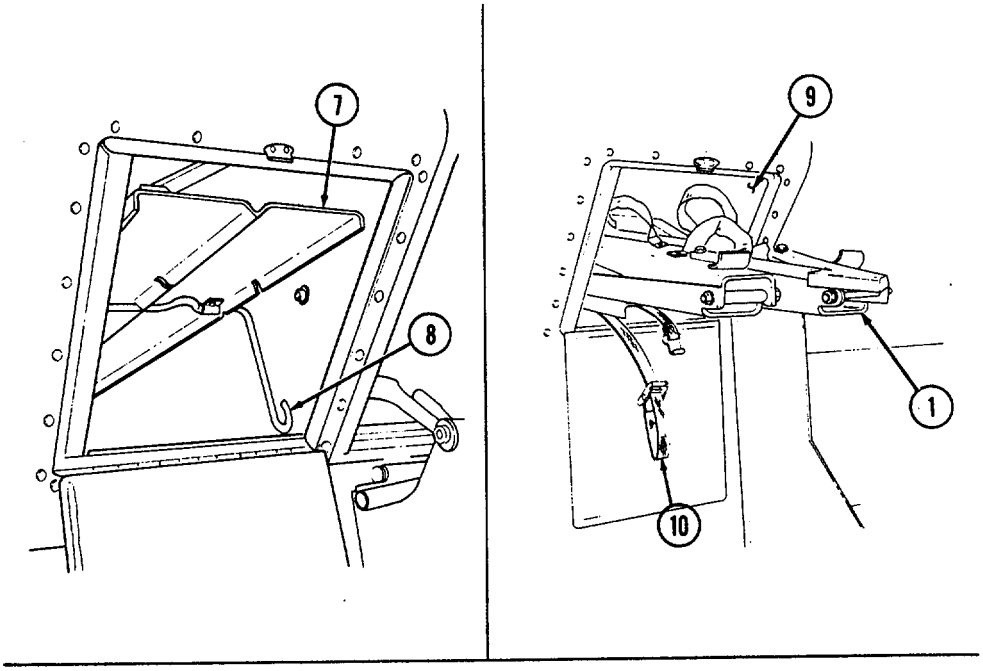
7
8
9
1
10

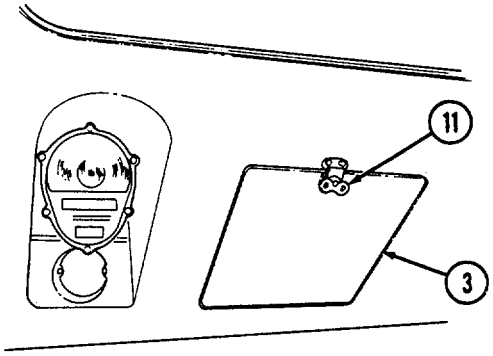
11
3

h. Opening Patient Seat to Accommodate Ambulatory Patients.

(1) Ensure litters (1) are in stowed position.

(2) Pull out and up on seat latch handle (5) and remove latch (7) from catch (6).

(3) Lift seatback (4) to open position and fold seatback support (2) into recesses between seat cushions (9).

(4) Ensure that seat braces (8) are fully extended and locked in position.

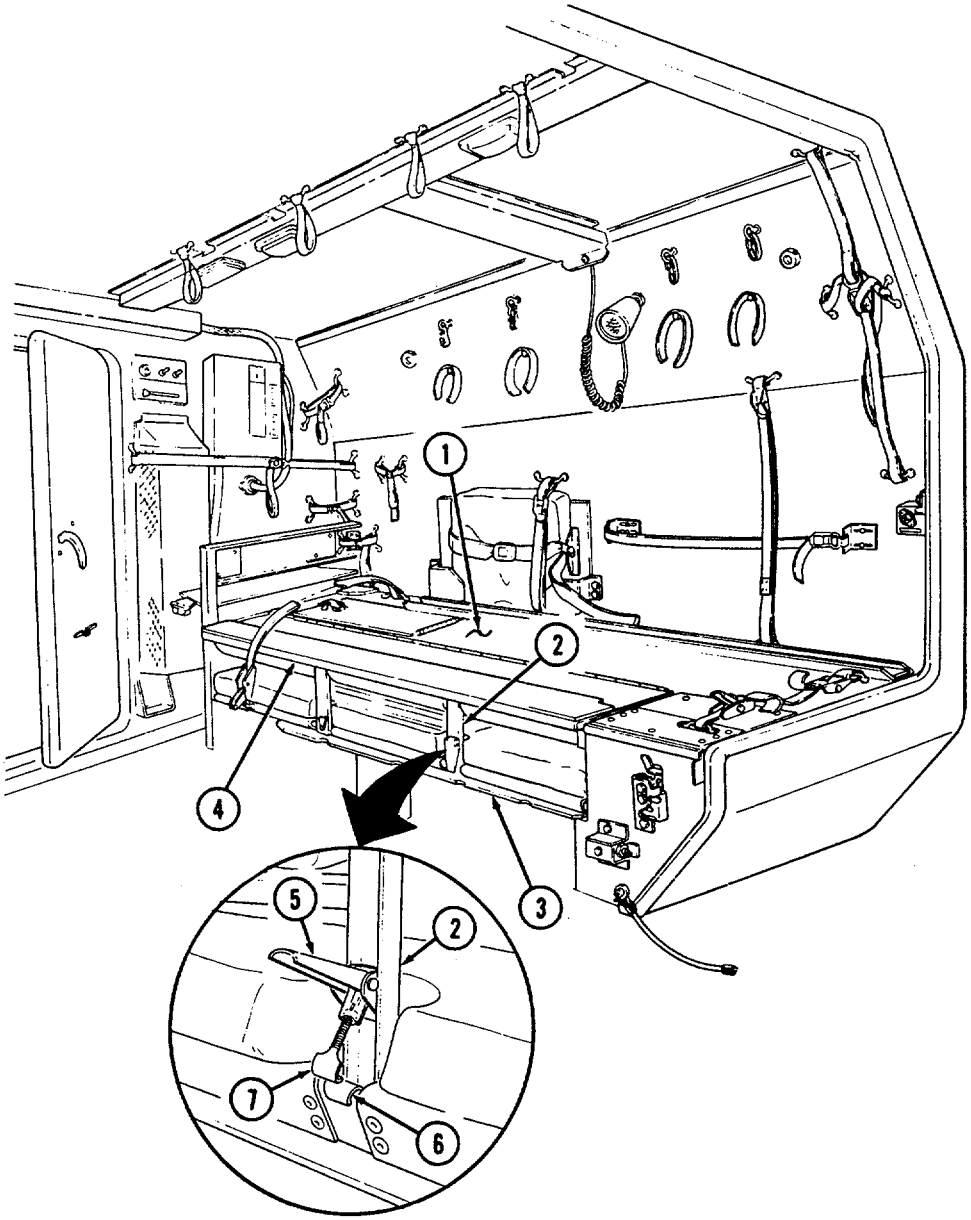

i. Closing Patient Seat to Accommodate Litter Patients.

(1) Press lock buttons (12) on seat braces (8) and fold braces (8) toward seatback (4).

(2) Fold seatback support (2) outward and fold seatback (4) into closed position. Ensure that guide pins (11) on seatback support (2) engage holes (10) in seat base (3).

(3) Install seatback (4) to seat base (3) with seat latch (7) and catch (6). If necessary to ensure security of seatback (4), adjust seat latch (7) to proper length by turning clockwise or counterclockwise.

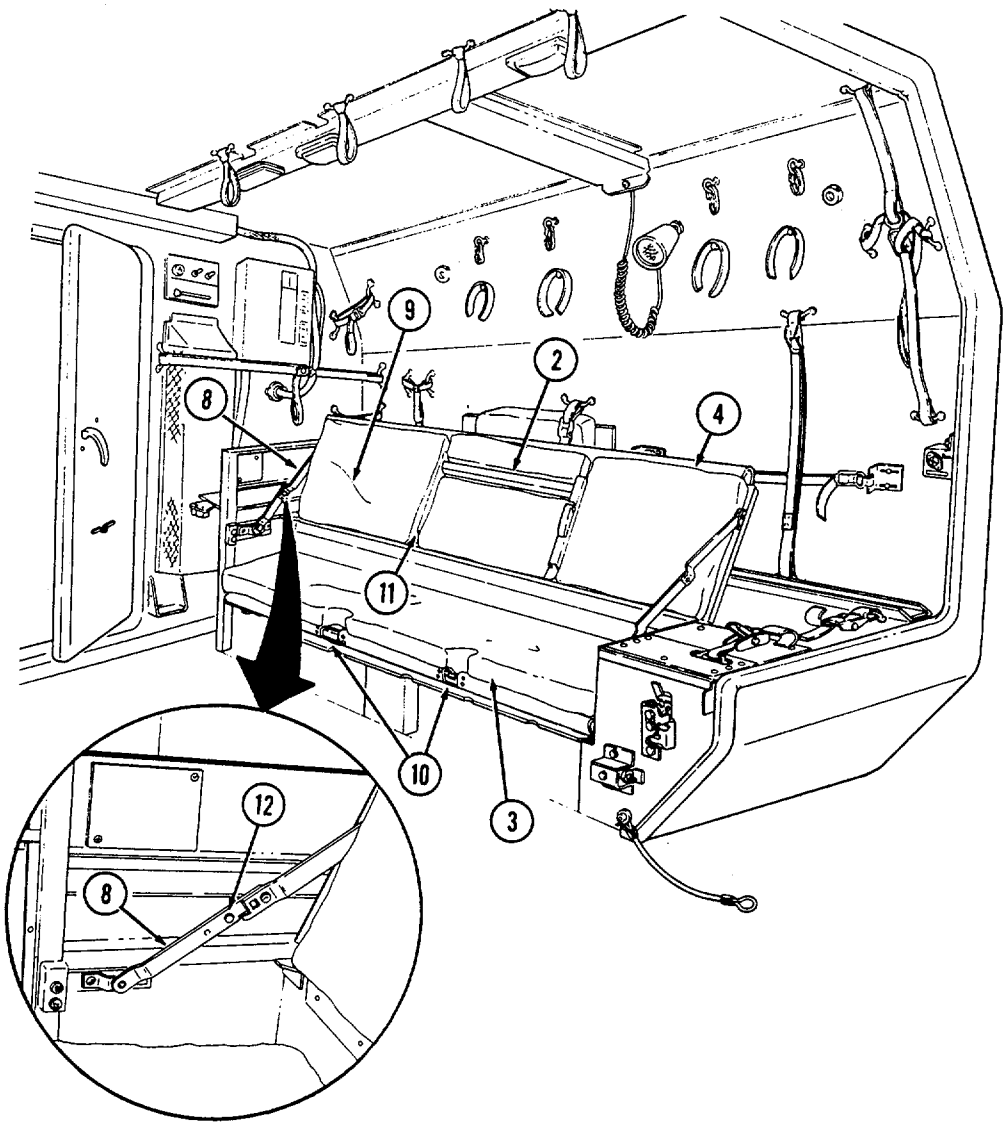

2-63. AMBULANCE NBC SYSTEM OPERATION

WARNING

- NBC filters do not protect against carbon monoxide poisoning.
- NBC filters do not decontaminate or neutralize contamination, they only collect and contain it.
- NBC contaminated filters must be handled using adequate precaution (FM 3-5) and must be disposed of by trained personnel.
- After Nuclear, Biological, or Chemical (NBC) exposure of this vehicle, all air filters shall be handled with extreme caution. Unprotected personnel may experience injury or death if residual toxic agents or radioactive material are present. Servicing personnel will wear protective overgarments, mask, hood, and chemical protective gloves and boots. All contaminated air filters will be placed into double-lined plastic bags and moved immediately to a temporary segregation area away from the work site. If contaminated by radioactive dust, the Company NBC team will measure the radiation before removal. The NBC team will determine the extent of safety procedures required. The temporary segregation area will be marked with the appropriate NBC signs. Final disposal of contaminated air filters will be in accordance with local SOP.
- Failure to observe above warnings may result in injury or death.

a. General

(1) For operation in an NBC environment, M996, M996A1, M997, M997A1, and M997A2 ambulances are equipped with a collective NBC protection system known as a Gas-Particulate Filter Unit (GPFU). The GPFU forces filtered, temperature-controlled air to the facepiece of the M25 series protective mask or the M13 series patient protective mask, increasing NBC protection, easing breathing effort, and reducing stress and heat fatigue during extended periods of NBC operation.

(2) The GPFU system mounted in M996 and M996A1, M997, M997A1, and M997A2 ambulances include the following components:

- M1A1-19 precleaner (blower)/particulate filter unit
- M18 gas filters (two per vehicle)
- NBC control panel and wiring harness
- Five or seven individual NBC heaters
- PVC or flex tubing to connect filter precleaner/particulate filter and heaters.

b. Component Location and Identification.

(1) The precleaner/particulate filter unit (6) and the two gas filters (5) are located in the NBC stowage compartment above the driver's position. In the M997, M997A1, and M997A2 ambulances, entry to this compartment is gained by unlatching the two paddle locks (1) and securing the NBC access door (2) to the ceiling (3) with the door catch (4).

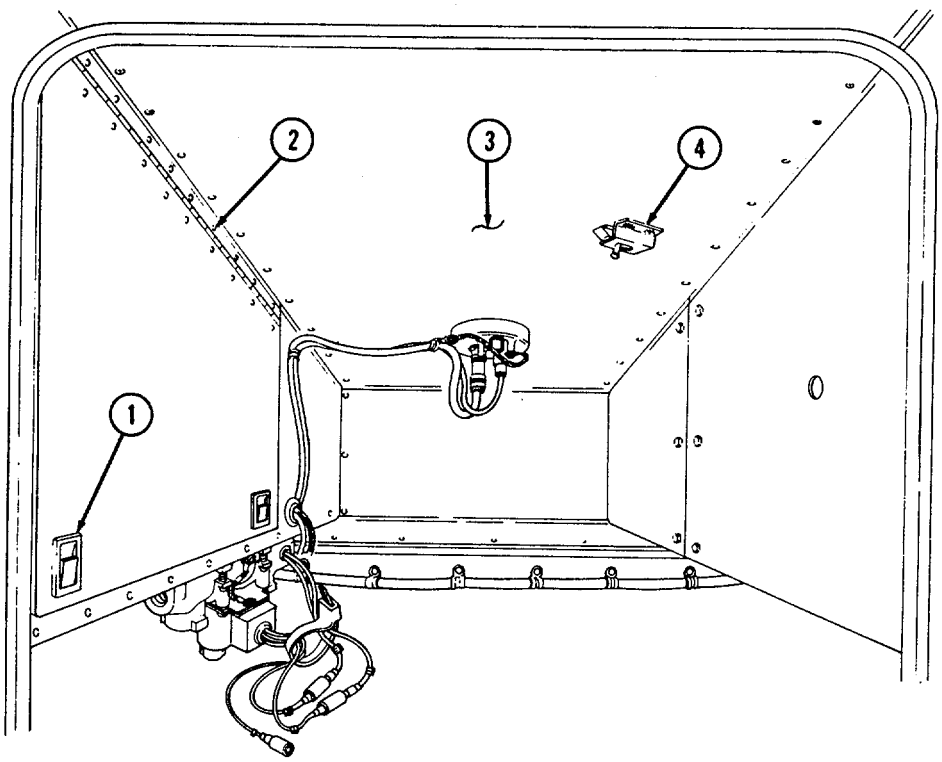
1
2
3
4

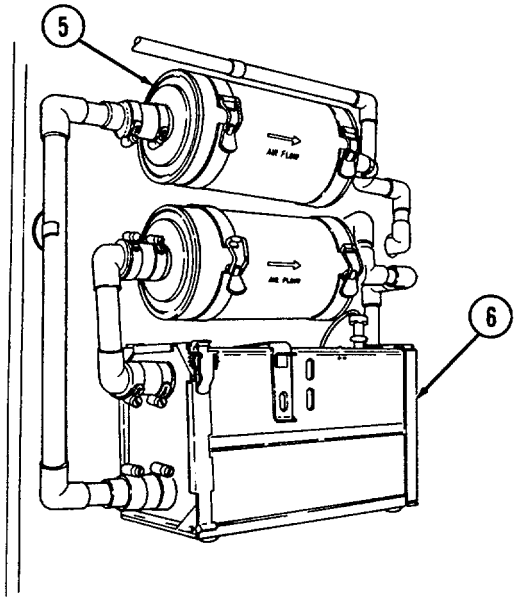
5
6
AIR FLOW
AIR FLOW

(2) In the M996 and M996A1 ambulances, the precleaner/particulate filter unit (4) and two gas filters (5) are mounted in a similar configuration to the M997, M997A1, and M997A2. Entry into the NBC compartment is gained through the NBC access door (1) located directly over the driver's head by removing the safety strap (3) and loosening two captive wing head screws (2) and carefully lowering the NBC access door (1). M18 gas filters in both vehicles are replaced in a similar manner. Contaminated M18 gas filters and the precleaner/particulate filter units should only be replaced by specially-trained NBC personnel.

M996 AND M996A1

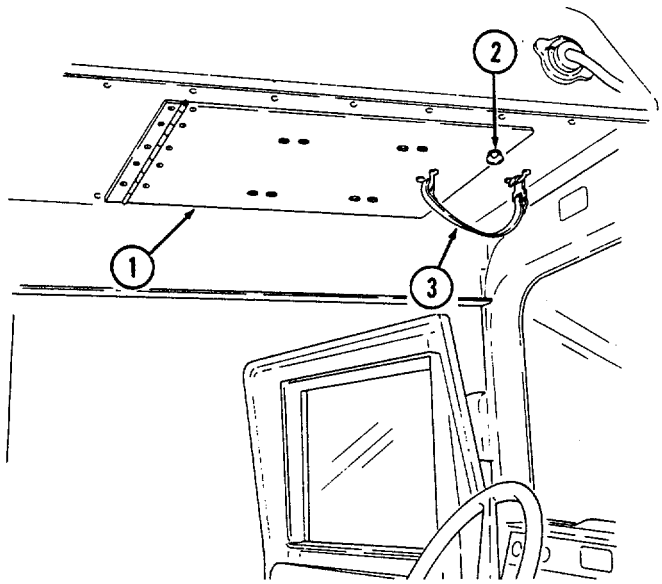

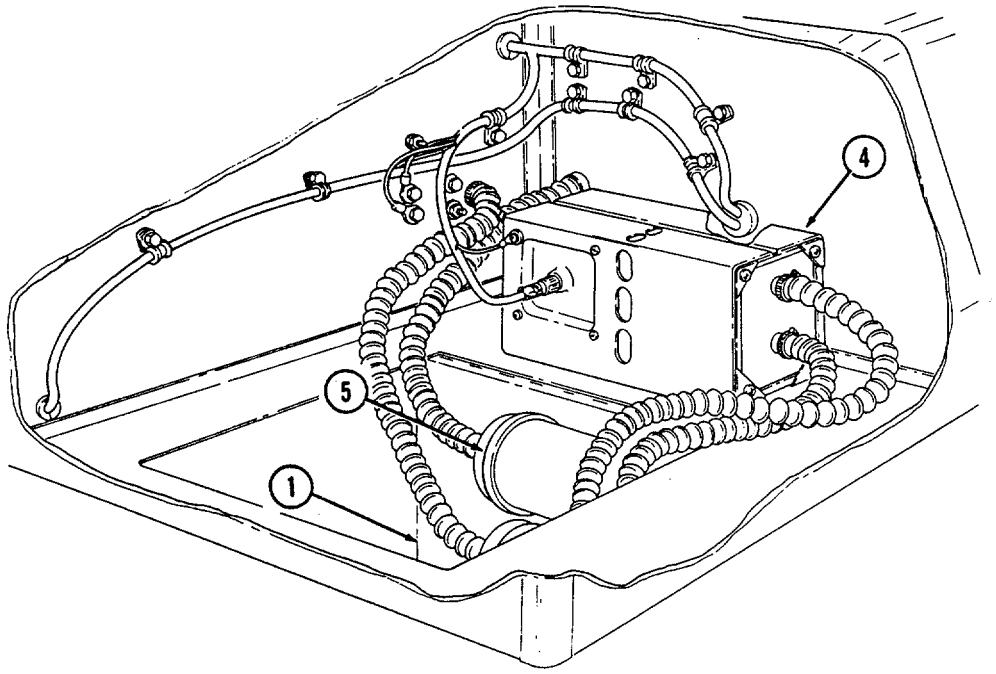

(3) The NBC heaters (6) supply heated air to protective mask facepieces connected to the GPFU system. Five heaters are installed in the M996 and M996A1 ambulances; three in the patient compartment and two in the cab. Seven heaters are installed in the M997, M997A1, and M997A2 ambulances; five in the patient compartment and two in the cab. When the heater (6) is not in use, the protective cap (9) should be installed in the heater (6) outlet. The cap (9) is a one-way check valve allowing air to flow in only one direction, outward from the heater (6). This reduces the potential risk of NBC contamination to the vehicle's NBC system. The heater (6) is activated by turning the temperature control knob (8) clockwise and adjusting to the desired heat level. The indicator light (7) will illuminate when the heater (6) is in operation

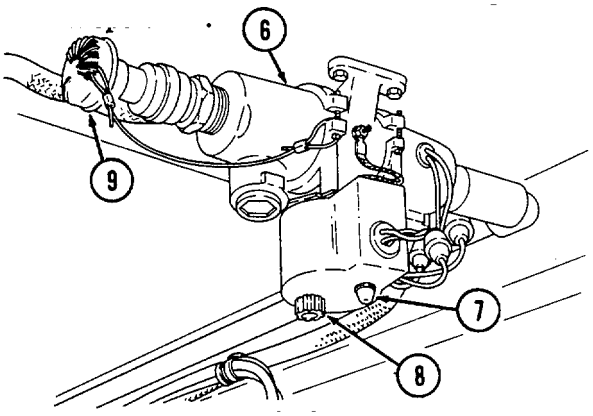

(4) The NBC control box (11) is mounted in the cab above and behind the passenger position. It houses the control switch (13) for the system and a fuse panel (12). A diagram (15) on the control box (11) shows heater location and identifies the fuse responsible for each heater circuit (16). Spare fuses are also present.

(5) To replace a NBC fuse (10), simply pull it straight out of the fuse panel (12). Check fuse (10) for an open fuse element or a melted fuse link (14). If the fuse (10) is damaged, replace with a new fuse (10). All fuses in the NBC control box are 20 amp.

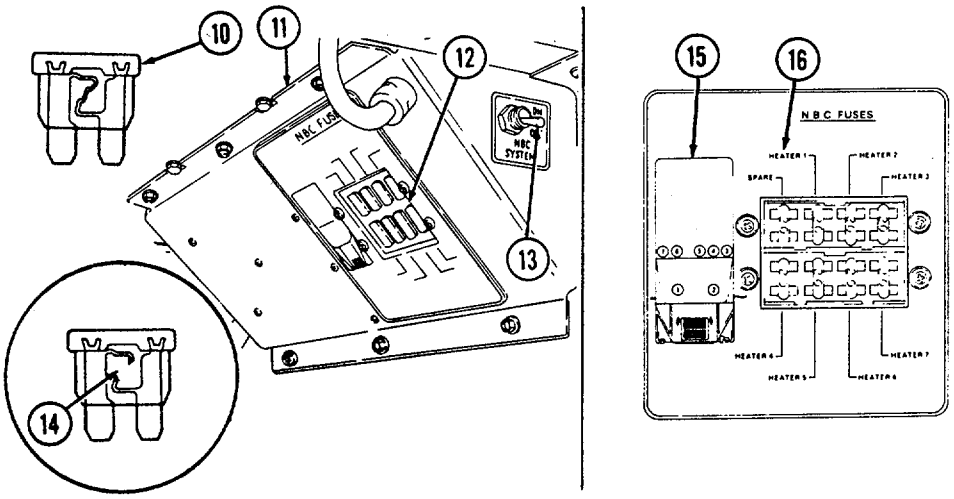

c. NBC System Operation.

(1) Activate the collective NBC protection system by positioning the NBC control switch (2) on the NBC control box (1) to the "ON" position. The M1A1-19 precleaner/particulate unit blower should engage.

(2) M25 series protective mask (10): remove protective cap (3) from heater outlet (4) and connect either the six or nine foot air hose (8) to canister coupling (9). Connect hose coupling (7) to the heater outlet (4).

(3) M13 series patient protective mask (11): mask the patient with the M13 series mask (11). Connect either the six or nine foot air hose (8) to adapter (13) and connect adapter (13) to protective mask facepiece (12). Remove protective cap (14) from the heater outlet (15) and connect hose coupling (7) to heater outlet (15).

(4) Turn heater control (6) to "WARMER" and adjust to desired heat level. Indicator light (5) should illuminate when heater is on.

(5) To shut down the NBC system, use the following procedure:

(a) Unmask crew and patients when all clear is sounded.
(b) Remove mask air lines from heater outlets.
(c) Install protective caps on heater outlets.
(d) Position switch on NBC control box to "OFF" position.
(e) Clean/decontaminate and stow NBC gear.

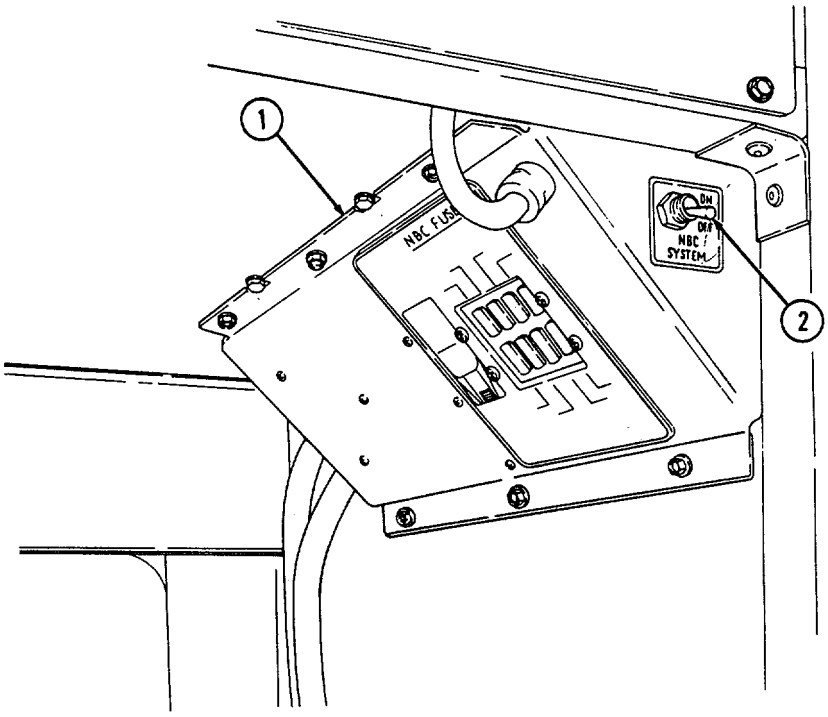

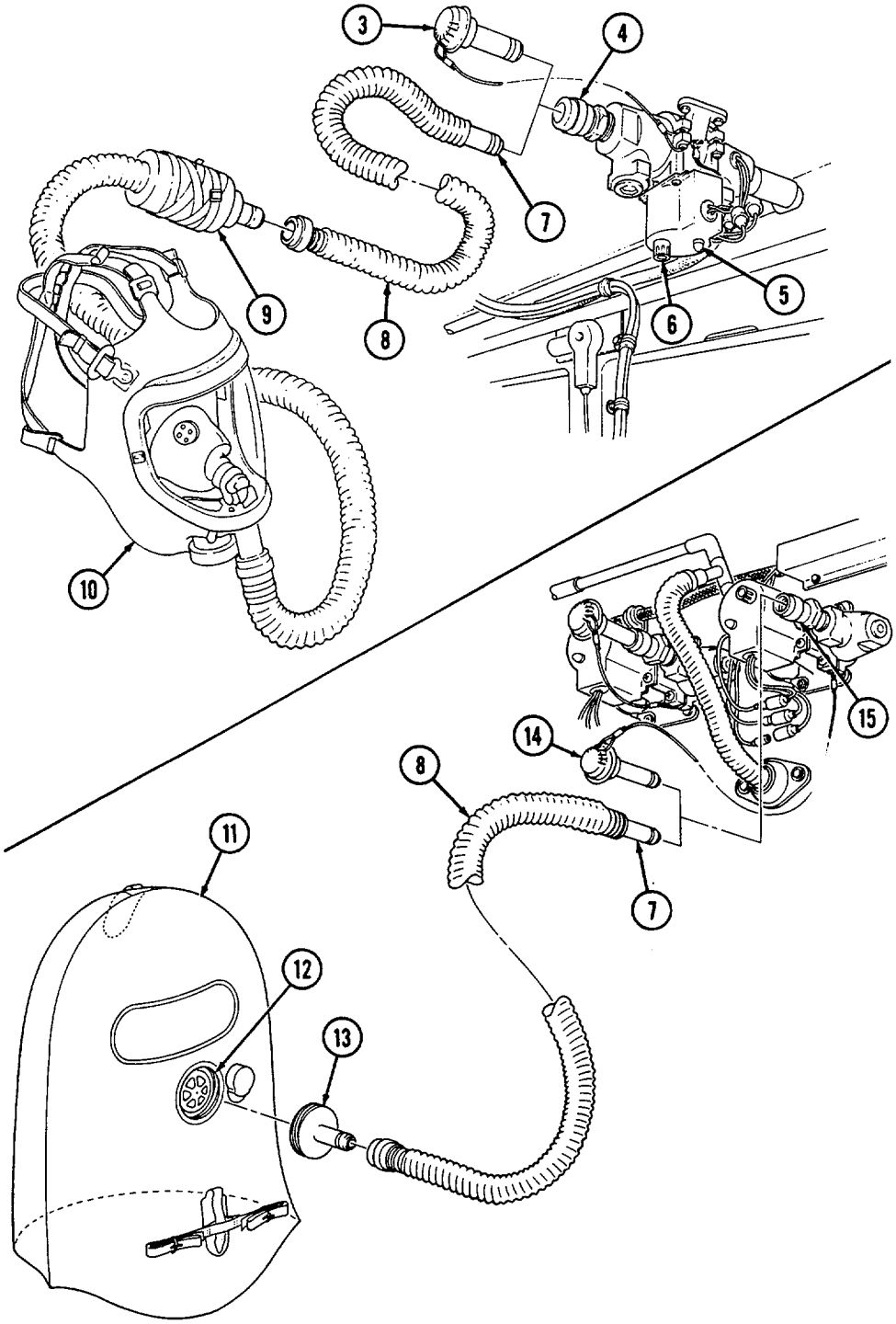
3
4
7
9
8
6
5
10
15
14
8
11
7
12
13

CHAPTER 3
MAINTENANCE INSTRUCTIONS
SECTION I. LUBRICATION

3-1. LUBRICATION INSTRUCTIONS

Lubrication Instructions, Appendix G, designate cleaning and lubricating procedures for M998 series vehicles.

3-2. GENERAL LUBRICATION INSTRUCTIONS

a. Service Intervals. Service intervals on the lubrication instructions are for normal operation in moderate temperatures, humidity, and atmospheric conditions.

b. Application Points. Wipe clean lubricating points and surrounding surfaces before and after applying lubricant.

c. Reports and Records. Report unsatisfactory performance of lubricant or preserving materials on Quality Deficiency Report, SF 368, as stated in paragraph 1-4.

3-3. GENERAL LUBRICATING INSTRUCTIONS UNDER UNUSUAL CONDITIONS

a. Service Intervals. Increase frequency of lubricating service when operating under abnormal conditions such as high or low temperatures, prolonged high-speed driving, or extended cross-country operations. Such operations can destroy lubricant's protective qualities. More frequent lubricating service intervals are necessary to maintain vehicle readiness when operating under abnormal conditions. During inactive periods, with adequate preservation, service intervals can be extended.

b. Changes in Lubricant Grades. Lubricant grades change with weather conditions. Refer to Appendix G for lubricant grade changes.

c. Maintaining Lubricant Levels. Lubricant levels must be checked as specified in Appendix G. Steps must be taken to replenish and maintain lubricant levels.

3-4. LUBRICATION FOR CONTINUED OPERATION BELOW 0°F (-18°C)

Refer to FM 9-207, Operation and Maintenance of Ordnance Materiel in Cold Weather (0°F to -65°F) (-18°C to -54°C), or Appendix G.

SECTION II. TROUBLESHOOTING

3-5. GENERAL

Troubleshooting, table 3-1, contains instructions that will help the operator identify and correct simple vehicle malfunctions. The table also helps the operator identify major mechanical difficulties that must be referred to unit maintenance. The listing of possible malfunctions come under major vehicle headings. They are:

- Engine
- Heating system
- Transmission
- Transfer case
- Brakes
- Wheels and tires
- Steering
- Winch
- Special purpose bodies

3-6. TROUBLESHOOTING PROCEDURES

a. Table 3-1 lists the common malfunctions which you may find during the operation or maintenance of M998 series of vehicles or its components. You should perform the tests/inspections and corrective actions in the order listed.

b. This manual cannot list all malfunctions that may occur, nor all tests or inspections and corrective actions. If a malfunction is not listed or is not corrected by listed actions, notify your supervisor.

CAUTION

Entering water too fast will cause water to splash up over hood and into air intake. The engine may stop abruptly and will not crank. Do not continue starting efforts; damage to engine will result.

NOTE

- Hydrostatic lock is caused by the entry of substantial amounts of water into the engine through the air intake system and subsequent contamination of the fuel system. Hydrostatic lock most frequently occurs during or just after fording. Water is forced into the air intake system, is drawn into the engine, and effectively "locks-up" the engine.

- Notify unit maintenance for further engine tests if you suspect hydrostatic lock.

Table 3-1. Troubleshooting

MALFUNCTION TEST OR INSPECTION CORRECTIVE ACTION

ENGINE

1. ENGINE FAILS TO CRANK

Step 1. Check to see if transmission shift lever is in “N” (neutral) or “P” (park) for M1123 and A2 vehicles.

If not, place lever in “N” (neutral) or “P” (park).

Step 2. Check battery fluid level and check battery connections for looseness, damage, or corrosion.

If any of these conditions exist, notify unit maintenance.

Step 3. Attempt to slave-start vehicle (para. 2-23).

Step 4. Other causes.

Notify unit maintenance.

2. ENGINE CRANKS SLOWLY

Step 1. Check battery fluid level and check battery cable connections for looseness, damage, or corrosion.

If any of these conditions exist, notify unit maintenance.

Step 2. Attempt to slave-start vehicle (para. 2-23).

Step 3. Other causes.

Notify unit maintenance.

3. ENGINE CRANKS BUT DOES NOT START

Step 1. Check to see if fuel gauge indicates “E” (empty).

Fill fuel tank, and start engine.

Step 2. Purge fuel system of air (para. 3-10).

Step 3. Check to see if WAIT-TO-START lamp assembly fails to light or does not go out.

Notify unit maintenance if wait-to-start lamp assembly fails to light or does not go out.

Step 4. Other causes.

Notify unit maintenance.

4. VEHICLE NOT CHARGING ACCORDING TO VOLTMETER

Step 1. Check battery cable connections for looseness, damage, or corrosion.

Notify unit maintenance of any damage to battery cables.

Step 2. Check for broken or missing alternator belts.

Notify unit maintenance if alternator belts are broken or missing.

Step 3. Other causes.

Notify unit maintenance.

Table 3-1. Troubleshooting (Cont'd)

MALFUNCTION TEST OR INSPECTION CORRECTIVE ACTION

5. EXCESSIVE EXHAUST SMOKE AFTER ENGINE REACHES NORMAL OPERATING TEMPERATURE 190°-230°F (88°-110°C)

Step 1. Check oil level for overfilling (Appendix G).
Notify unit maintenance if fluid level is high.

Step 2. Check for restricted air cleaner.
If emergency situation exists, clean air cleaner element (para. 3-15).
If emergency situation does not exist, notify unit maintenance.

Step 3. Other causes.
Notify unit maintenance.

6. ENGINE STARTS BUT MISFIRES, RUNS ROUGH, OR LACKS POWER

Step 1. Check for water in fuel filter by draining.
Drain fuel filter (para. 3-10).

Step 2. Check for restricted air cleaner.
If emergency situation exists, clean air cleaner element (para. 3-15).
If emergency situation does not exist, notify unit maintenance.

Step 3. Other causes.
Notify unit maintenance.

7. ENGINE OVERHEATS ACCORDING TO ENGINE COOLANT TEMPERATURE GAUGE

Step 1. Check to see if fan is running.
If fan is not running, perform emergency fan clutch override procedure (para. 3-23).

Step 2. Allow engine to cool and check for low coolant level.
Add coolant as necessary (para. 3-9).

Step 3. Check for debris blocking radiator fins.
Remove debris.

Step 4. Check for broken or missing fan belts.
Notify unit maintenance if belts are broken or missing.

Step 5. Other causes.
Notify unit maintenance.

8. LOW ENGINE OIL PRESSURE ACCORDING TO OIL PRESSURE GAUGE

Step 1. Check for low oil level (para. 3-17).
Add oil (Appendix G).

Step 2. Other causes.
Notify unit maintenance.

Table 3-1. Troubleshooting (Cont'd)

MALFUNCTION TEST OR INSPECTION CORRECTIVE ACTION

HEATING SYSTEM

9. HOT WATER PERSONNEL HEATER FAILS TO PRODUCE HEAT AFTER ENGINE REACHES OPERATING TEMPERATURE

Step 1. Check operating controls for correct settings.

Step 2. Other causes.

Notify unit maintenance.

TRANSMISSION

10. NO RESPONSE TO SHIFT LEVER MOVEMENT

Step 1. Check to see if transfer case lever is in "N" (neutral) or "P" (Park) for M1123 and A2 vehicles.

Place transmission shift lever in "N" (neutral) or "P" (Park) and select transfer gear range.

Step 2. Other causes.

Notify unit maintenance.

11. ROUGH SHIFTING

All causes.

Notify unit maintenance.

12. FLUID THROWN FROM TRANSMISSION FILL TUBE

Step 1. Check to see if transmission dipstick is loose.

Secure dipstick.

Step 2. Check fluid level for overfilling (para. 3-19).

Notify unit maintenance if fluid level is high.

Step 3. Other causes.

Notify unit maintenance.

13. SLIPPAGE IN ALL RANGES

Step 1. Check for low fluid level (para. 3-19).

Add fluid (Appendix G).

Step 2. Other causes.

Notify unit maintenance.

TRANSFER CASE

14. TRANSFER CASE SHIFT LEVER WILL NOT SHIFT

Step 1. Check for proper shifting sequence. Ensure proper shifting sequence is used (para. 2-11).

Step 2. Other causes.

Notify unit maintenance.

Table 3-1. Troubleshooting (Cont'd)

MALFUNCTION TEST OR INSPECTION CORRECTIVE ACTION

BRAKES

15. POOR SERVICE BRAKING ACTION

All causes.

Notify unit maintenance.

16. SERVICE BRAKES DRAGGING

All causes.

Notify unit maintenance.

17. BRAKE WARNING LAMP ASSEMBLY ON

Step 1. Check to see if parking brake is partially applied.

Disengage parking brake.

Step 2. Check for low brake fluid level (TM 9-2320-280-20).

Add brake fluid (Appendix G).

Step 3. Other causes.

Notify unit maintenance.

18. PARKING BRAKE FAILS TO HOLD VEHICLE

Clean and adjust parking brake (para. 3-13)

If parking brake still fails to hold vehicle, notify unit maintenance.

WHEELS AND TIRES

19. WHEELS WOBBLE OR SHIMMY

Step 1. Check to see if wheel lug nuts are loose.

Tighten loose lug nuts (para. 3-26) and notify unit maintenance to properly torque lug nuts.

Step 2. Inspect for mud or dirt build up inside the rim.

Remove any mud or dirt build up.

Step 3. Other causes.

Notify unit maintenance.

20. EXCESSIVE OR UNEVEN TIRE WEAR

Step 1. Check tire air pressure.

Inflate or deflate tires to correct air pressure.

Step 2. Other causes.

Notify unit maintenance.

21. VEHICLE WANDERS TO ONE SIDE ON LEVEL PAVEMENT

Step 1. Check tire air pressure.

Inflate or deflate tires to correct air pressure.

Step 2. Other causes.

Notify unit maintenance.

Table 3-1.Troubleshooting (Cont'd)

MALFUNCTION TEST OR INSPECTION CORRECTIVE ACTION

STEERING

22. HARD STEERING

Step 1. Check tire air pressure.
Inflate or deflate tires to correct air pressure.

Step 2. Check power steering reservoir for low fluid level (para. 3-20).
Add steering fluid (Appendix G).

Step 3. Check for broken or missing power steering belts.
Notify unit maintenance if belts are broken or missing.

Step 4. Check power steering cooler for bent fins or any other air flow obstructions.
Remove obstructions if fins are not damaged.
Notify unit maintenance if power steering cooler is damaged.

Step 5. Other causes.
Notify unit maintenance.

WINCH

23. WINCH STOPS DURING NORMAL OPERATION

Step 1. Wait 2 minutes and attempt winch operation again.
Refer to para. 2-26 for winch operation.

Step 2. Check to see if clutch lever is engaged (para. 2-26).
If not, engage clutch lever.

Step 3. Check to see if voltmeter is in red or yellow (engine not running).
Start engine and charge batteries.

Step 4. Other causes.
Notify unit maintenance.

SPECIAL PURPOSE BODIES
TOW/ARMAMENT CARRIER

24. WEAPON STATION WILL NOT ROTATE OR LOCK

Step 1. Check to see if brake handle is in proper position (para. 2-54).
Place brake handle in proper position.

Step 2. Check for obstructions that may be restricting weapon station movement.
Remove obstructions.

Step 3. Other causes.
Notify unit maintenance.

25. CARGO SHELL DOOR WILL NOT SEAL PROPERLY

All causes.
Notify unit maintenance.

Table 3-1. Troubleshooting (Cont'd)

MALFUNCTION TEST OR INSPECTION CORRECTIVE ACTION

AMBULANCE

26. ALL CEILING WHITE UGHTS, BLACKOUT UGHTS, AND SPOTLIGHTS FAIL TO ILLUMINATE

Step 1. Check that interior light switch on control box is in proper position.
Place interior light switch in proper position (para. 2-61).

Step 2. If white light illumination is required under blackout conditions, make sure front door, rear doors, and rear steps are closed.

Step 3. For white illumination with front door, rear doors, and rear steps opened, set the vehicle light switch to “service drive" (para. 2-13).

Step 4. Check that left and right lighting fuses are serviceable.
Replace fuses if blown (para. 2-61).

Step 5. Other causes.
Notify unit maintenance.

27. LEFT OR RIGHT CEILING WHITE LIGHTS AND BLACKOUT LIGHT FAIL TO ILLUMINATE

Step 1. Check that left lighting or right lighting fuse is serviceable.
Replace fuse if blown (para. 2-61).

Step 2. Other causes.
Notify unit maintenance.

28. CEIUNG WHITE UGHT OR BLACKOUT UGHT FAILS TO ILLUMINATE

Step 1. Inspect bulb for serviceability.
Replace bulb with known serviceable bulb (para. 3-28).

Step 2. Other causes.
Notify unit maintenance.

29. SPOTUGHT FAILS TO ILLUMINATE

Step 1. Perform malfunction 26, steps 1 through 3.

Step 2. Check if ceiling lights illuminate. If dome lamps illuminate, check to ensure spotlight switch is in proper position.
Place spotlight switch in proper position (para. 2-61).

Step 3. Inspect bulb for serviceability.
Replace bulb with known serviceable bulb (para. 3-28).

Step 4. Other causes.
Notify unit maintenance.

Table 3-1. Troubleshooting (Cont'd)

MALFUNCTION TEST OR INSPECTION CORRECTIVE ACTION

30. POOR HEATING, VENTILATING, OR AIR-CONDITIONING PERFORMANCE

Step 1. Ensure that operating controls are properly set.
Set operating controls (para. 2-61).
Step 2. Inspect HVAC filters for excessive dust, dirt, or debris.
Service HVAC filters (para. 3-28).
Step 3. Inspect HVAC fuses for a blown or missing fuse.
Notify unit maintenance.
Replace fuse (para. 2-61).
Step 4. Other causes.
Notify unit maintenance.

Section III. MAINTENANCE PROCEDURES

3-7. GENERAL

The operator/crew is responsible for daily, weekly, and monthly preventive maintenance checks and services listed in table 2-2. Certain other maintenance services, also the responsibility of the operator/crew, are explained in this section.

3-8. RAISING AND SECURING HOOD

a. Raising Hood.

(1) Apply parking brake.

(2) Release left and right hood latches (1).

WARNING

To ensure opening of the hood assembly is accomplished safely and effectively, always maintain the proper lifting posture with legs bent and back straight. Failure to do so may cause damage to equipment or injury to personnel.

(3) Facing the driver's side of the hood, position one hand at the rear area of the hood and the other at the rear area of the wheel well.

NOTE

Due to the inherent weight of the assembly, the hood may flex when opening, possibly causing interference between the right side of the hood assembly and the body. This interference can be eliminated by pushing the hood assembly laterally, away from the individual, prior to lifting.

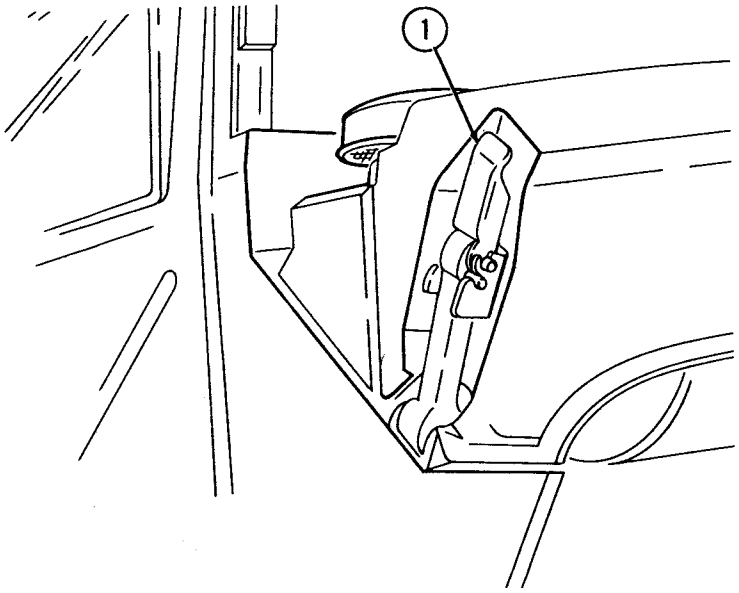

WARNING

When raising and securing hood, ensure the hood prop rod is secured to hood support bracket. Damage to equipment or injury to personnel will occur if hood is not properly secured in raised position.

(4) Push the hood toward the passenger side and lift at the same time, moving your hands toward the front of the hood as it opens. The prop rod (2) should automatically engage the support bracket (3) when hood is raised.

b. Lowering hood.

WARNING

When releasing hood prop rod, do not pull rod at hook end. Injury to fingers will result.

CAUTION

Lower hood slowly. Damage to hood and/or headlights can occur if hood is dropped.

(1) While supporting and slightly raising the hood, grasp prop rod (2) above retaining ring (5), pull out, and release hood prop rod (2).

(2) Once the prop rod hook (4) is clear of the support bracket (3), slowly lower hood and secure left and right hood latches (1).

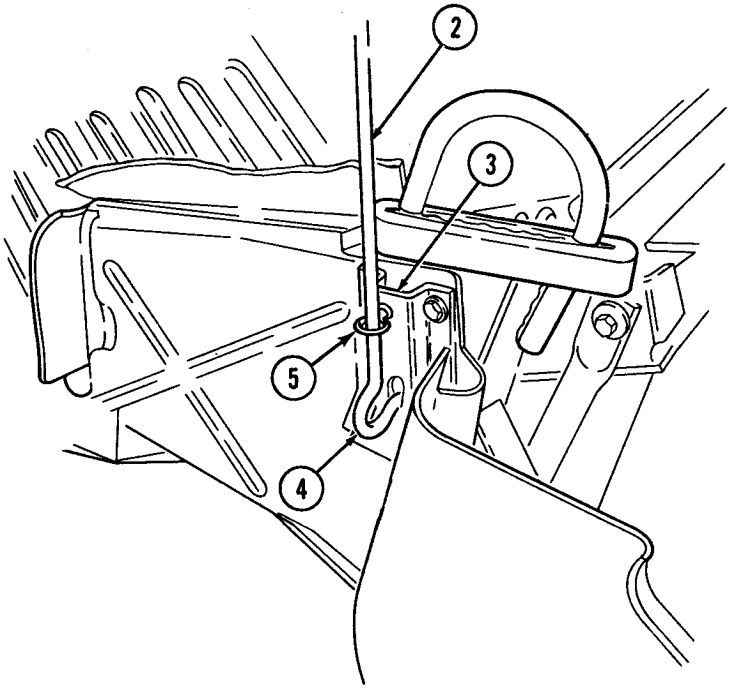

3-9. SERVICING COOLANT SURGE TANK

WARNING

Extreme care should be taken when removing surge tank filler cap if temperature gauge reads above 165°F (74°C). Do not add coolant to cooling system when engine is hot unless engine is running. Add coolant slowly. Steam or hot coolant under pressure will cause injury.

a. Raise and secure hood (para. 3-8).

b. Visually check coolant level. Surge tank level should be at “COLD FILL LINE" before operation and slightly above "COLD FILL LINE” after operation. If coolant is low, perform steps c through h.

c. Place a thick cloth over surge tank filler cap (1). Carefully turn cap (1) counterclockwise to its first stop to allow cooling system pressure to escape.

d. After cooling system pressure is vented, push down and turn cap (1) counter-clockwise to remove. Add coolant until surge tank level is at "COLD FILL LINE."

e. Start engine (para. 2-10) and run for one minute.

f. Stop engine (para. 2-12) and recheck coolant level. If coolant level is low, add coolant until surge tank level is at "COLD FILL LINE."

g. Repeat steps e and f until surge tank level remains at “COLD FILL LINE."

h. Install cap (1). Lower and secure hood (para. 3-8).

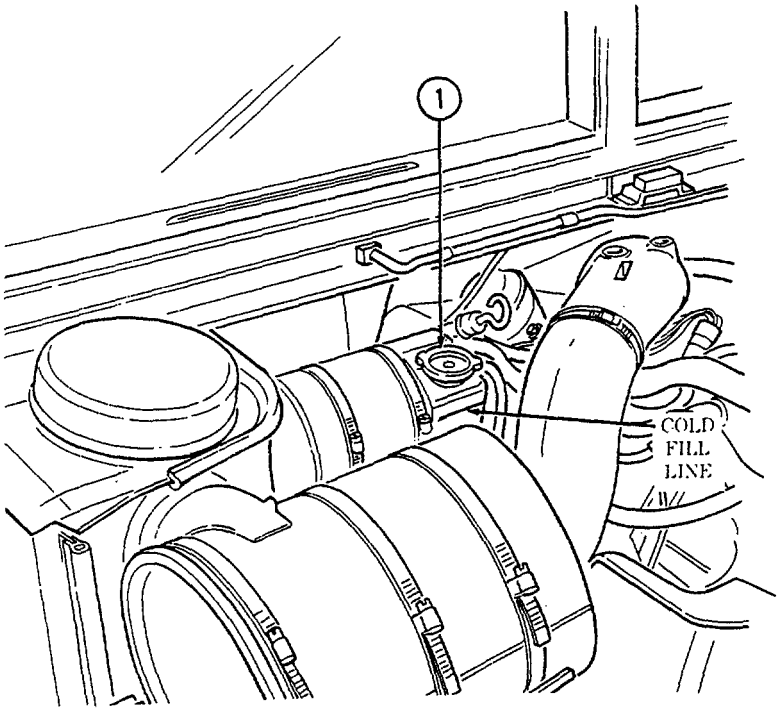

3-10. FUEL FILTER MAINTENANCE

WARNING

Do not perform fuel system checks, inspection, or maintenance while smoking or near fire, flames, or sparks. Fuel may ignite, causing damage to vehicle and injury or death to personnel.

a. Draining Fuel Filter.

(1) Raise and secure hood (para. 3-8).
(2) Start engine (para. 2-10).
(3) Open fuel draincock (4) and allow approximately 1 pint (0.47 L) of fuel to drain into a suitable container.
(4) Close draincock (4) when draining is complete.
(5) Shut off engine (para. 2-12).
(6) Lower and secure hood (para. 3-8).

b. Purging Fuel System of Air.

NOTE

This procedure is used to purge fuel system of air if vehicle has run out of fuel.

(1) Raise and secure hood (para. 3-8).
(2) Disconnect fuel line (2) from fuel filter outlet (3).
(3) Place a rag over fuel filter outlet (3).
(4) Crank engine until rag is wet with fuel.
(5) Connect fuel line (2) to fuel filter outlet (3).
(6) Start engine (para. 2-10) and ensure fuel system has been purged of air.

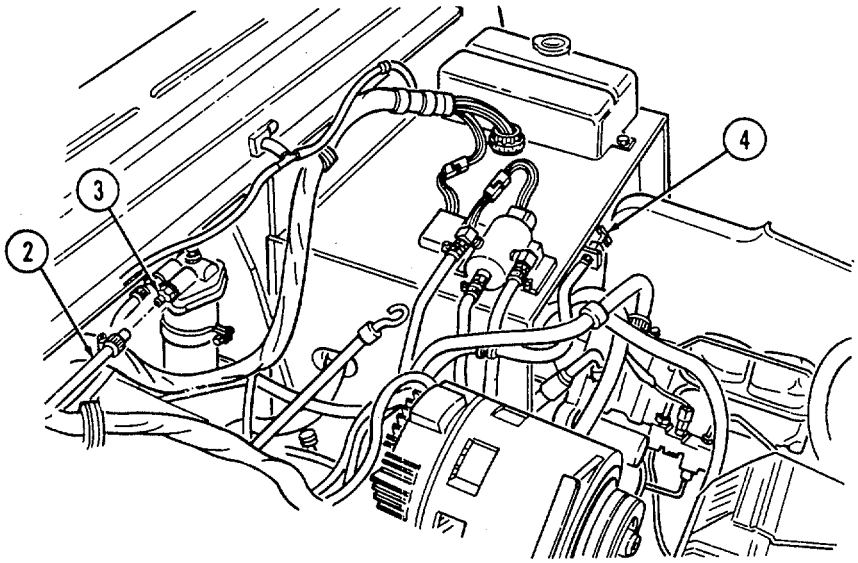

3-11. SERVICING BATTERIES

a. Unhook latches (6) securing companion seat (1) to battery box and remove companion seat (1).

WARNING

Do not perform battery system checks or inspections while smoking or near fire, flames, or sparks, especially if the caps are off. Batteries may explode causing damage to vehicle and injury or death to personnel.

b. Check electrolyte level.

(1) Unscrew and remove all battery filler caps (2) and check electrolyte level. If electrolyte level is below the ledge in the battery filler opening, add distilled water (appendix D, item 27).

(2) A battery that is continually in need of electrolyte may indicate an improperly adjusted charging system. Notify unit maintenance if the problem continues.

(3) Inspect the vented battery filler caps (2) to ensure that vents are clear, unobstructed, and permit escape of battery gases. Clean vents if obstructed; replace caps (2) if damaged.

(4) Install filler caps (2).

c. Inspect all battery compartment components, including terminal clamps (5), battery cables (3), battery holddowns (8), and shunt (4) for corrosion, damage, or looseness. Inspect terminal boots (7), if installed. Notify unit maintenance if any of these problems exist.

d. Ensure that battery terminal clamps (5) have a light coat of lubricating oil for corrosion protection. Refer to appendix D, item 19.

e. Install companion seat (1) and secure to battery box with latches (6).

f. Refer to TM 9-6140-200-14 for additional information.

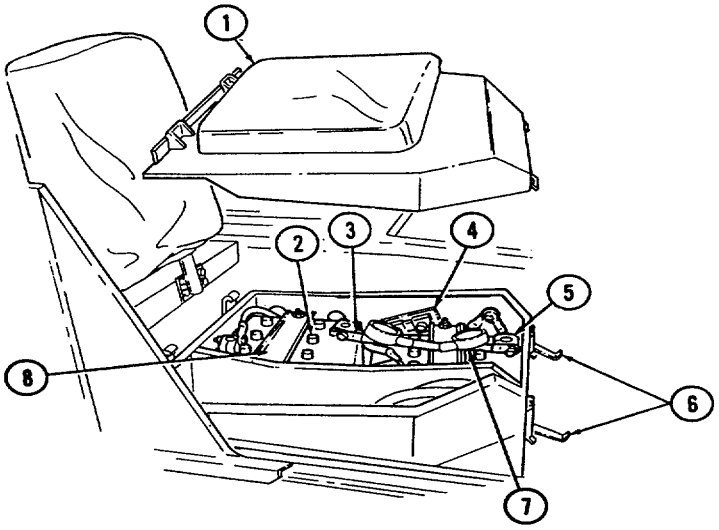

3-12. FIRST-AID KIT RELOCATION

NOTE

Reports from the field indicate that first-aid kit, stored under the companion seat and in the battery box compartment, can be contaminated by battery acid residues. At the discretion of the unit commander, the first-aid kit can be removed, cleaned, and relocated under the driver's seat.

a. First-aid Kit Removal.

(1) Remove companion seat (para. 2-15).

(2) Remove first-aid kit (9) from bracket and strap assembly (10) located inside battery box compartment (14).

(3) Remove two screws (13), nuts (11), four washers (12), and bracket and strap assembly (10) from battery box compartment (14).

(4) Install companion seat (para. 2-15).

b. First-aid Kit Cleaning.

(1) Using a solution of sodium bicarbonate and water, wash the outside of first-aid kit (9), rinse, and dry completely.

(2) Inspect inside of first-aid kit (9) for evidence of contamination. If contaminated, replace first-aid kit (9).

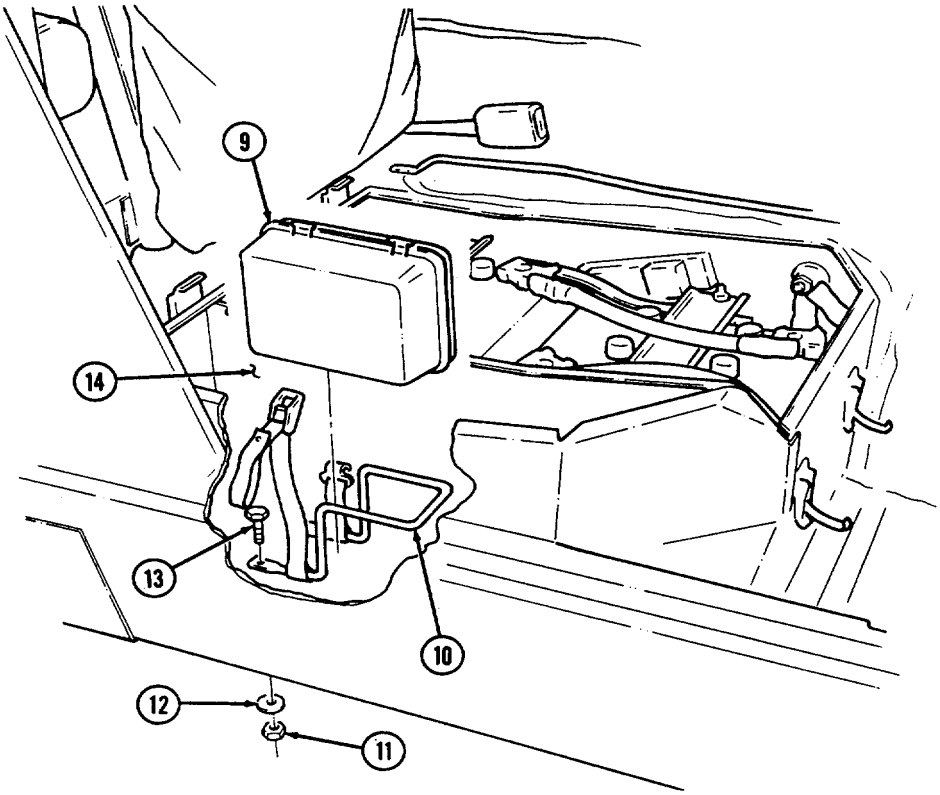

c. First-aid Kit Installation.

NOTE

An optional cotton duck pamphlet bag (Appendix C, Item 2) can be used to protect first-aid kit.

(1) Remove front access plate (3) from driver's seat (2).

(2) Position first-aid kit (1) under driver's seat (2).

(3) Install front access plate (3) on driver's seat (2).

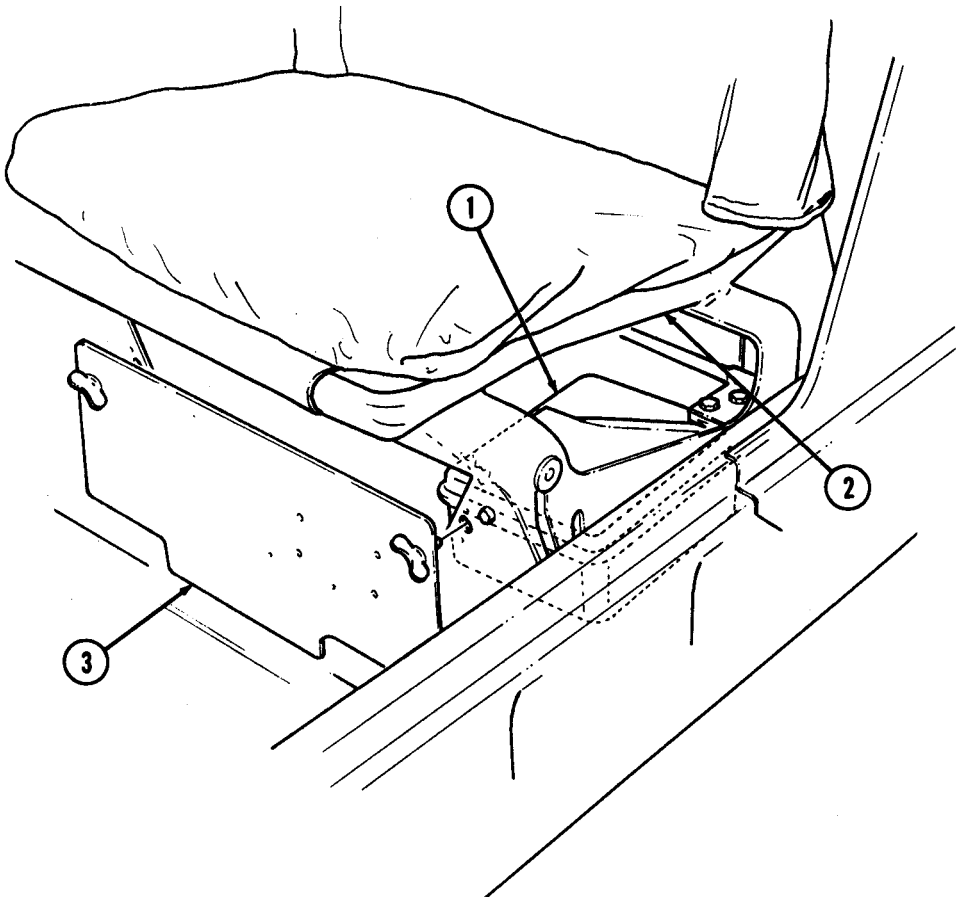

3-13. PARKING BRAKE ADJUSTMENT AND CLEANING

a. Chock wheels and release parking brake handle (5).
b. Turn adjusting knob (4) clockwise as tightly as possible by hand.
c. Apply parking brake handle (5).
d. If parking brake cannot be applied, turn adjusting knob (4) counterclockwise until parking brake can be applied.
e. Test parking brake:
(1) Remove chocks.
(2) Depress service brake pedal and start engine (para. 2-10).
(3) Place transfer case shift lever (6) in "H" (high) and transmission shift lever (7) in "D" (drive).
(4) Slowly let up on service brake pedal. Parking brake should hold vehicle stationary.
f. Vehicles are equipped with one of two types of parking brake assemblies. Check to see if vehicle is equipped with parking brake assembly (A) or parking brake assembly (B). Perform step (1) for parking brake assembly (A) or step (2) for brake assembly (B).

(1) After operating in mud or sand, use a low pressure water source to ensure that the parking brake pads (10), rotor (12), pad-rotor contact areas (11), guide pins (9), and push pins (8) are thoroughly cleaned of mud, sand, or other debris. Lubricate items 8 and 9 in accordance with Appendix G as soon as possible.

(2) After operating in mud or sand, use a low pressure water source to ensure that actuating lever (14) and spring (13) are thoroughly cleaned of mud, sand, or other debris. Lubricate item 14 in accordance with Appendix G as soon as possible.

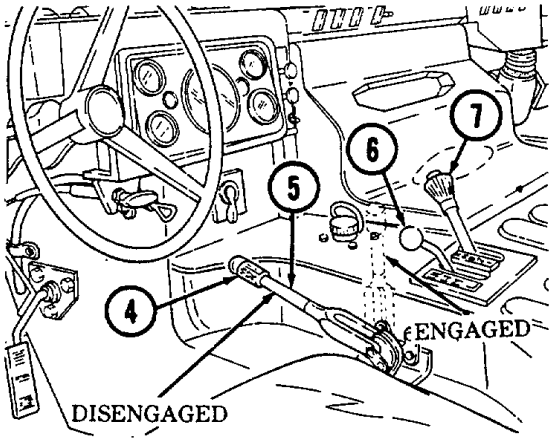

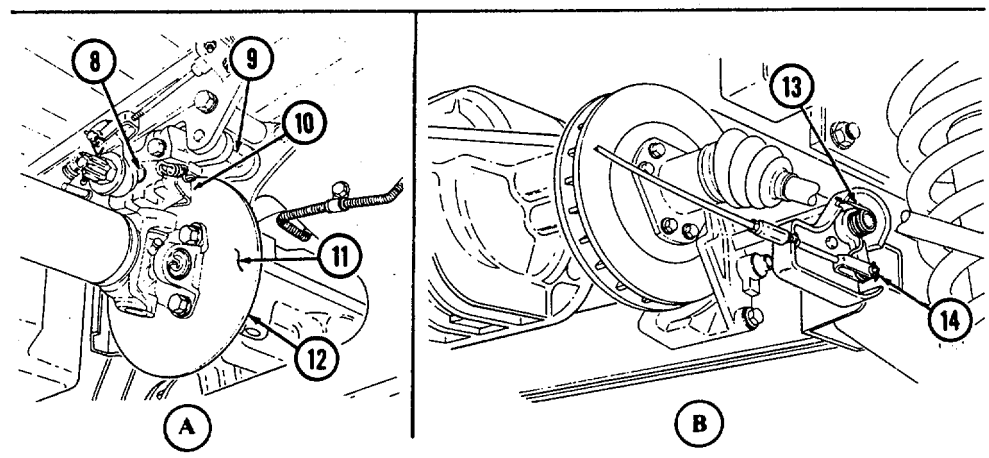

3-14. SERVICING WINDSHIELD WASHER RESERVOIR

a. Check fluid level in washer reservoir (2). Check frequently under adverse weather conditions.

b. If fluid is required, refer to table 3-2.

Table 3-2. Cleaning Compound-to-Water Ratio

Temperature Range	Cleaning Compound	to	Water
+15°F (-9°C)	1	to	2
+40° to -15°F (+4° to -26°C)	1	to	1
+40° to -65°F (+4° to -54°C)	2	to	1

c. If washer system does not work, check washer nozzles (1) to see if they are blocked with dirt and/or debris. Remove dirt and/or debris with fine wire.

d. Check hoses (3) for leaks or poor conditions.

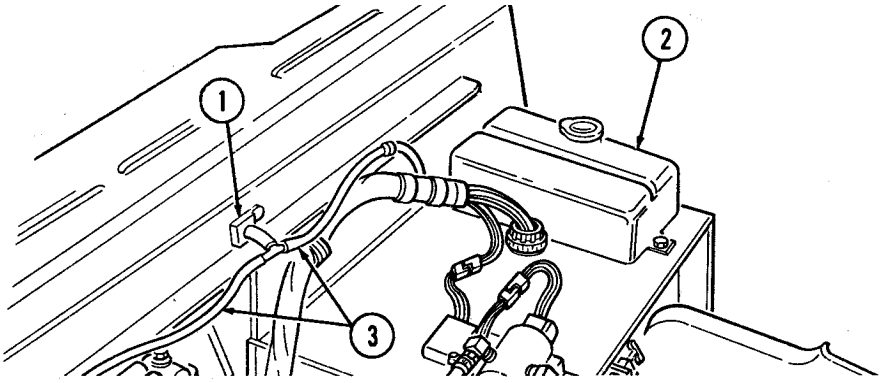

3-15. AIR CLEANER SERVICING (EMERGENCY PROCEDURE)

a. General. Air cleaner service is required when the yellow air restriction indicator (6) reaches the red zone (5) of the gauge (4).

CAUTION

Do not operate engine without air cleaner element. Damage to engine will result.

b. Filter Element Removal.

(1) Raise and secure hood (para. 3-8).

NOTE

Perform step 3 for vehicles with new over-center clamp configuration only.

(2) Loosen clamp bolt (13) and remove clamp (7) and cover (8) from air cleaner assembly (11).

(3) Release over center-clamp (7) and remove clamp (7) and cover (8) from air cleaner assembly (11).

WARNING

- NBC contaminated filters must be handled using adequate precautions (FM 3-5) and must be disposed of by trained personnel.
- After Nuclear, Biological, or Chemical (NBC) exposure of this vehicle, all air filters shall be handled with extreme caution. Unprotected personnel may experience injury or death if residual toxic agents or radioactive material are present. Servicing personnel will wear protective overgarments, mask, hood, and chemical protective gloves and boots. All contaminated air filters will be placed into double-lined plastic bags and moved immediately to a temporary segregation area away from the work site. If contaminated by radioactive dust, the Company NBC team will measure the radiation before removal. The NBC team will determine the extent of safety procedures required. The temporary segregation area will be marked with the appropriate NBC signs. Final disposal of contaminated air filters will be in accordance with local Standard Operating Procedures (SOP).
- Failure to observe above warnings may result in injury or death.

(3) Remove nut and washer assembly (9) securing filter element (10) to stud (12) and pull filter element (10) from air cleaner assembly (11).

(4) Place cover (8) and clamp (7) back on air cleaner assembly (11) to prevent dirt and dust from entering air induction system while cleaning filter element (10).

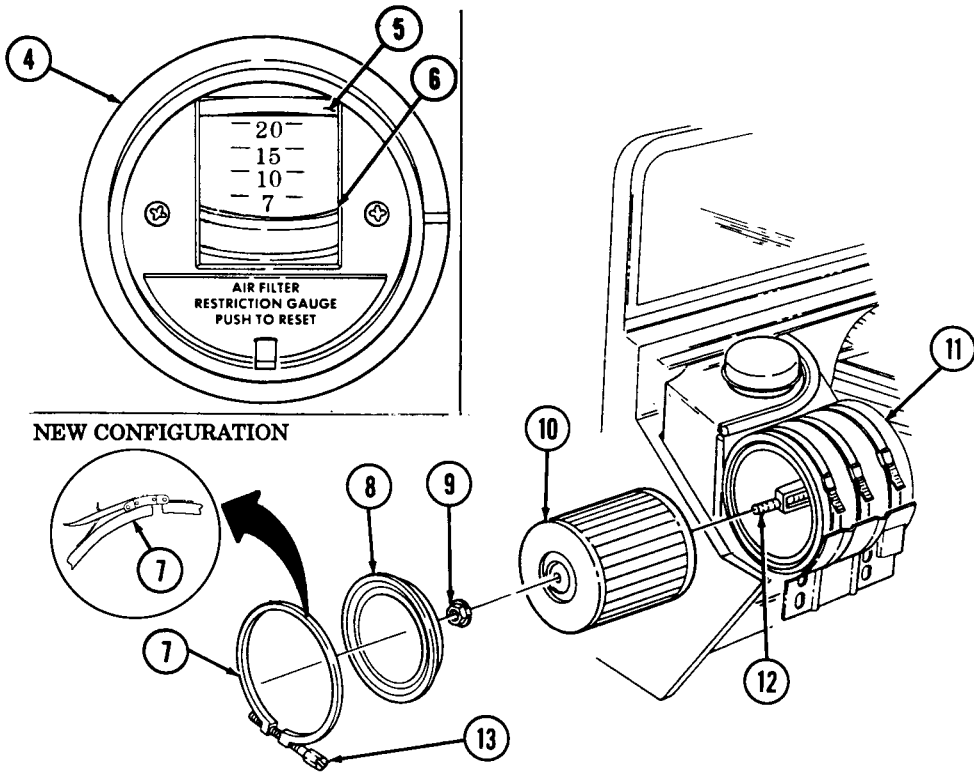

c. Air Filter Element Cleaning.

CAUTION

Do not strike ends of filter element on hard surface, or damage to filter element may result.

(1) Hold filter element (1) so open end faces ground.

(2) Gently tap completely around filter element (1) with hand to free trapped dirt.

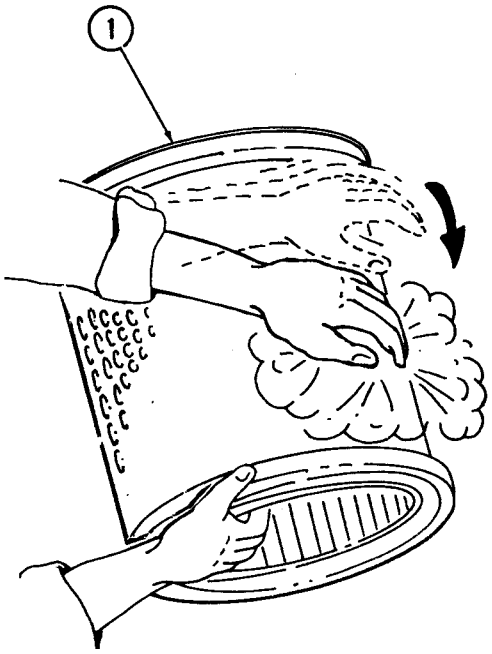

d. Filter Element Installation.

(1) Remove clamp (2) and cover (3) from air cleaner assembly (5).

(2) Position filter element (1) into air cleaner assembly (5) and secure element (1) to stud (6) with nut and washer assembly (4).

CAUTION

When clamp is secured to end of air cleaner ensure the clamp bolt is between the three and six o'clock positions to prevent damaging hood when hood is closed.

NOTE

Perform step 4 for vehicles with new over-center clamp configuration only.

(3) Install cover (3) on end of air cleaner assembly (5) and position clamp (2) as shown. Tighten clamp bolt (7).

(4) Install cover (3) on air cleaner assembly (5) and secure with over-center clamp (2).

(5) Lower and secure hood (para. 3-8).

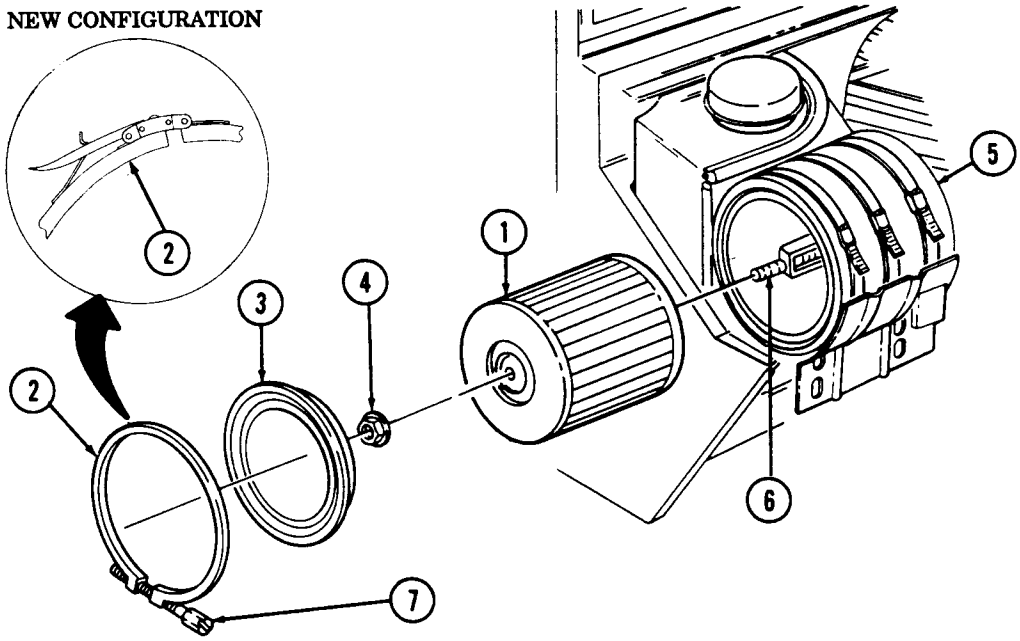

3-16. AIR CLEANER DUMP VALVE SERVICING

NOTE

Air cleaner dump valve should be serviced after any operation through sand, mud, or water.

a. Raise and secure hood (para. 3-8).

b. Squeeze dump valve (8) to clear any sand, mud, or water from air cleaner assembly (5).

c. For vehicles equipped with a deep water fording kit, loosen clamp (9) and remove cap (10). Clean and install cap (10) and secure with clamp (9).

d. Lower and secure hood (para. 3-8).

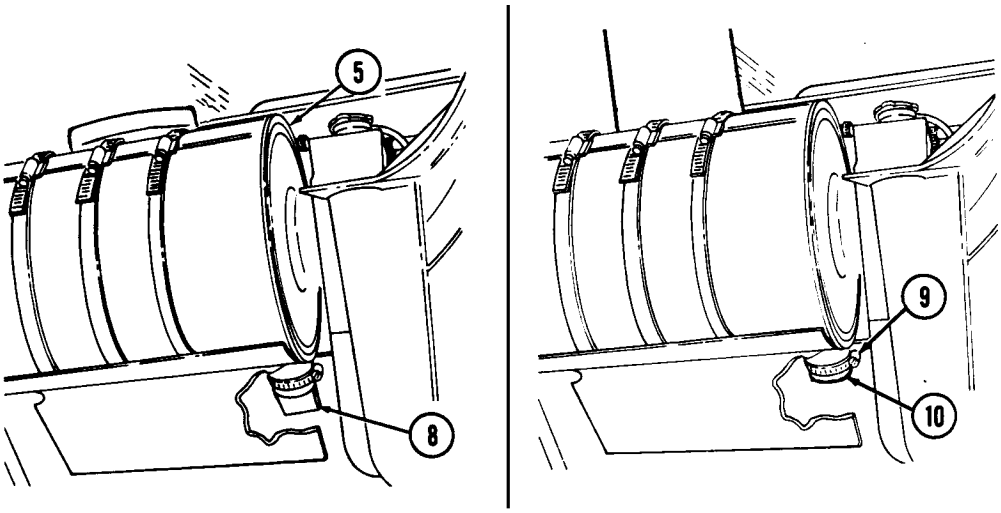

3-17. ENGINE OIL SERVICING

a. Raise and secure hood (para. 3-8).

CAUTION

Do not permit dirt, dust, or grit to enter engine oil dipstick tube. Internal engine damage will result if engine oil becomes contaminated.

NOTE

- Engine oil level is checked with engine off.
- If oil level checks above 'FULL," it may be due to oil cooler drain back. Operate the engine for one minute, shut down, wait one minute, and recheck oil level.
- Vehicles equipped with deep fording kit will have a sealed dipstick.

b. Pull out dipstick (1) and check for proper oil level. Level should be at crosshatch marks (2) between “FULL" and “ADD 1 QT.”

CAUTION

Do not overfill engine crankcase. Damage to engine will result.

c. If engine oil is low, remove oil filler cap (3) and add engine oil (Appendix G).

CAUTION

Install a non-vented filler cap only. An incorrect filler cap will not seal properly, causing water to enter and damage engine.

d. Replace oil filler cap (3), tighten securely, and wipe away any spilled oil.
e. Lower and secure hood (para. 3-8).

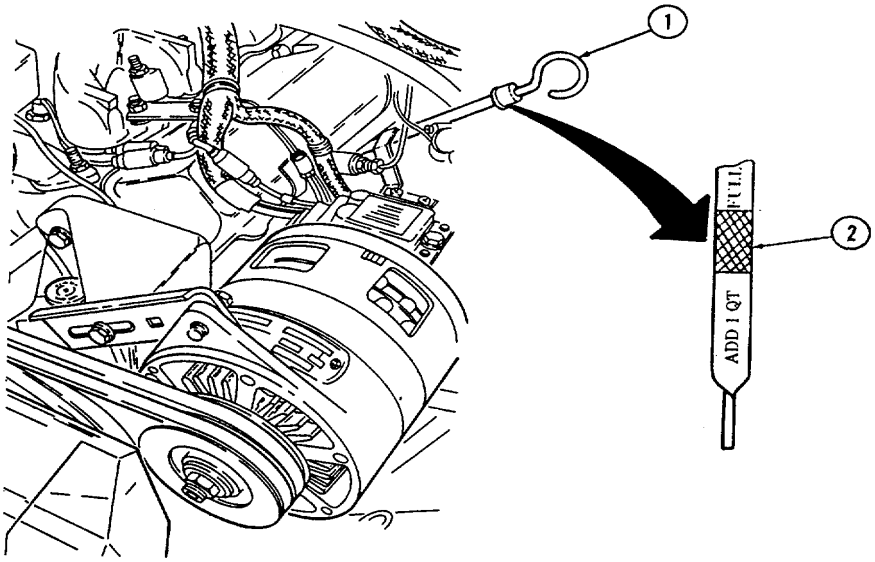

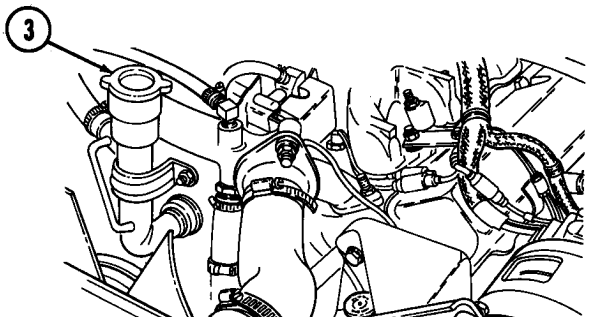

3-18. PLASTIC WINDOW CLEANING

CAUTION

Never clean plastic windows with abrasives. Repeated use of abrasives or failure to follow the instructions below will eventually cause damage to windows.

NOTE

This paragraph provides instructions for cleaning soft top plastic windows and ballistic windshield and windows. This procedure is to be used on the inner plastic laminate surfaces of ballistic glass. Clean the outer surface of ballistic glass as you would plain glass.

a. Plastic Window Cleaning.

(1) Wash windows using soap and water and a soft, clean cloth.

(2) Rinse with clean water.

(3) Apply cream cleaner (appendix D, item 26) to plastic windows.

(4) Wipe cream cleaner off with dry cloth. Cream cleaner improves visual clarity after cleaning with soap and water.

a.1. Plastic Window Cleaning - Fungus and Mold.

(1) Wash windows using soap and water and a soft clean cloth.

(2) Rinse with clean water.

(3) Using a soft, clean cloth and isopropyl alcohol (Appendix D, Item 1.01), clean off fungus and mold.

(4) Wipe area with soft, clean cloth.

b. Ballistic Glass Cleaning.

CAUTION

Remove rings or other hard objects from hands before cleaning or polishing plastic surfaces. Do not use hard, dirty, or gritty cloths on plastic surfaces. Do not apply water, solvent, or polish unless the plastic is cool and is protected from the heating effects of sunlight. Failure to follow these instructions will cause damage to ballistic glass.

(1) Add detergent (appendix D, item 5) to a gallon of water.

(2) Saturate a soft cloth with cleaning solution and lightly rub plastic surface.

(3) Flush off cleaning solution with water and dry with a soft cloth.

(4) Apply polish (appendix D, item 24) to plastic surface. Let dry, then wipe clean. Light scratches can be removed by vigorous rubbing, but care should be taken not to rub too long in one place.

3-19. TRANSMISSION FLUID SERVICING

a. Raise and secure hood (para. 3-8).
b. Start engine (para. 2-10).
c. While depressing service brake pedal, move transmission shift lever through all operating ranges and "R" (reverse) before checking fluid level in "N" (neutral) with parking brake applied.

CAUTION

Do not permit dirt, dust, or grit to enter transmission oil dipstick tube. Internal transmission damage will result if transmission fluid becomes contaminated.

NOTE

Vehicles equipped with deepwater fording kit will have a sealed dipstick.

d. Pull out dipstick (2) and check for proper transmission fluid level. At normal operating temperature, fluid level should be at crosshatch marks (3).

CAUTION

Do not overfill transmission. Damage to transmission will result.

e. If transmission fluid level is low, add fluid (appendix G) through fill pipe (1), insert dipstick (2), and wipe away any spilled fluid.
f. Shut off engine (para. 2-12).
g. Lower and secure hood (para. 3-8).

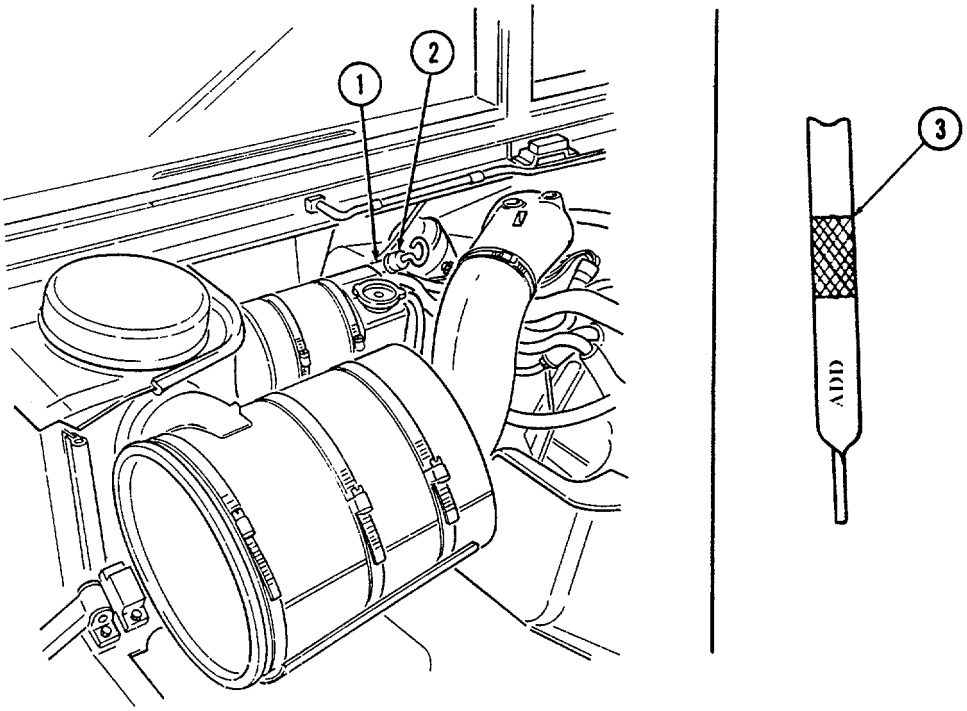

3-20. POWER STEERING FLUID SERVICING

a. Raise and secure hood (para. 3-8).

CAUTION

Do not permit dirt, dust, or grit to enter power steering reservoir. Damage to power steering system will result if power steering fluid becomes contaminated.

b. Pull out cap/dipstick (5) and check steering fluid level. If engine is warm, level should be between "HOT" and "COLD" marks. If engine is cool, level should be between "ADD" and "COLD" marks. In either condition, fluid must be added if level reads below "ADD" mark.

CAUTION

Do not overfill power steering reservoir. Damage to power steering system will result.

c. If fluid level is low, add fluid (appendix G) to power steering reservoir (4) and wipe away any fluid spilled.

d. Install cap/dipstick (5).

e. Lower and secure hood (para. 3-8).

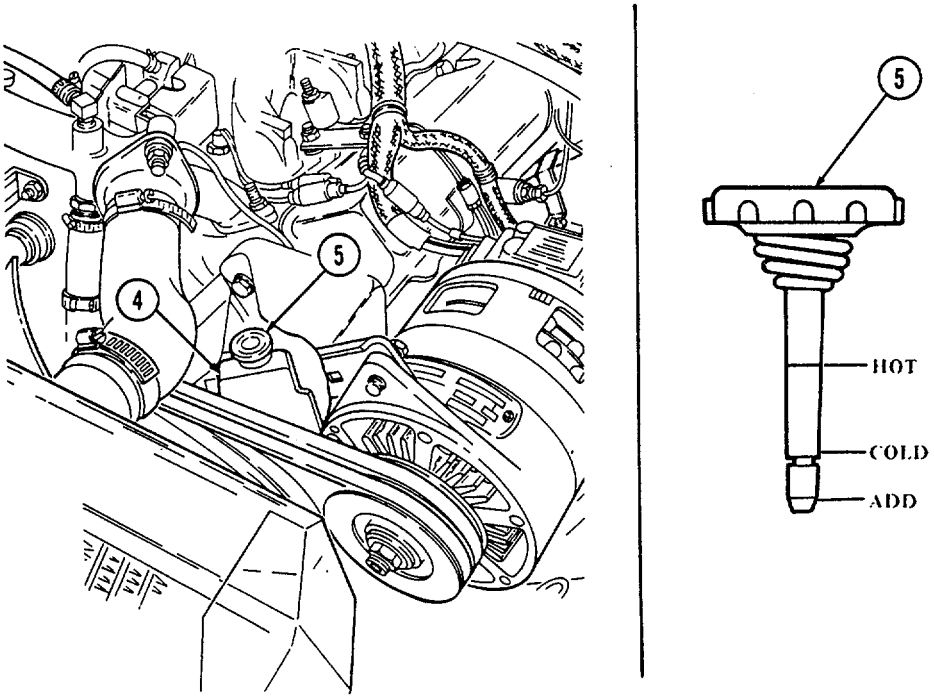

3-21. FUEL TANK SERVICING

a. Shut off engine (para. 2-12).

WARNING

Do not perform fuel system checks, inspection, or maintenance while smoking or near fire, flames, or sparks. Fuel may ignite, causing damage to vehicle, and injury or death to personnel.

CAUTION

Do not turn fuel cap handle more than necessary to remove or seal fuel cap. Fuel cap chain links may separate or become damaged.

b. Turn fuel cap handle (1) on fuel cap (2) counterclockwise and remove fuel cap (2).

NOTE

To help prevent spills and overflows, pay close attention to the dispensing nozzle while refueling. Do not exceed a safe refueling rate. If fuel backup and spillage is being experienced, reduce flow rate. Also, when topping off the tank, a reduced flow rate should be used.

CAUTION

When refueling the vehicle, be careful that the nozzle does not slam into the filler pipe. Damage to the strainer may occur, allowing dirty fuel to clog up the filters.

c. Insert the fuel filler nozzle into the filler neck rubber cone, using caution not to puncture the fuel filler neck strainer. Dispense fuel into fuel tank.

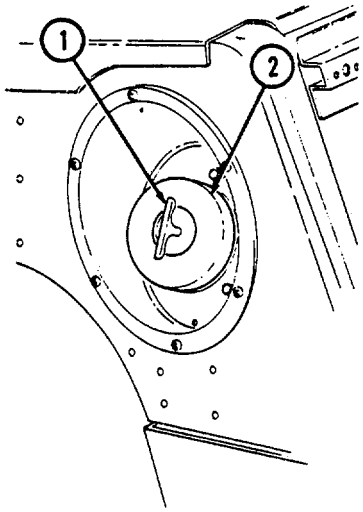

d. If the fuel cap handle (1) is turned more than necessary to remove the fuel cap (2), the fuel cap backing plate (3) may become jammed on the staked threads (4). Correct the problem by holding the backing plate (3) and turning the fuel cap handle (1) clockwise until the backing plate (3) turns freely.

e. When fueling operation is complete, install fuel cap (2) and turn fuel cap handle (1) clockwise to seal fuel cap (2).

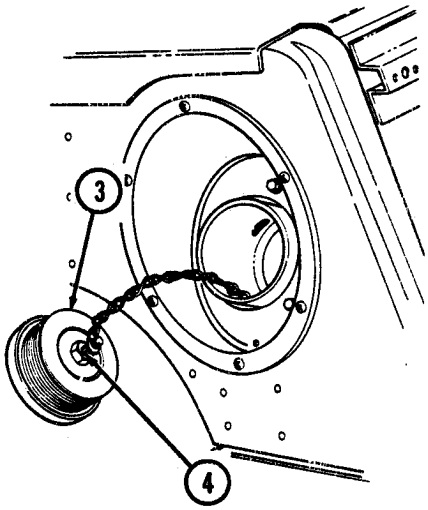

3-22. TIRE CHAIN INSTALLATION AND REMOVAL

CAUTION

Tire chains are only used when extra traction is required and must be used as an axle set. Any other combination may cause damage to the drivetrain.

a. Radial Tire Chain Installation.

(1) Spread out tire chain assembly (1) and line up with tire.

(2) Cautiously move or drive vehicle over tire chain assembly (1) until wheel is positioned at either end of chain assembly (1), allowing tire chain assembly (1) to be draped up and over tire.

(3) Maneuver tire chain assembly (1) until cross-link sections are evenly spaced around tire. Secure one side of tire chain assembly (1) to tire by hooking inside fastener (2) to chain assembly (1). Tighten chain assembly (1) as much as possible.

(4) Repeat steps 1 through 3 above until all tire chain assemblies have been properly installed.

(5) Hook end fastener (3) to chain assembly (1) and secure with locking retainer (4) to tighten chain assembly (1). Ensure as many chain links as possible lay between the sidewall head lugs (5) on both sides of tires.

(6) Move vehicle forward a few feet and retighten chain assembly (1) to remove any slack from where tire was resting on chain assembly (1). Secure loose chain linkage to chain assembly (1) with wire or other field expedient method.

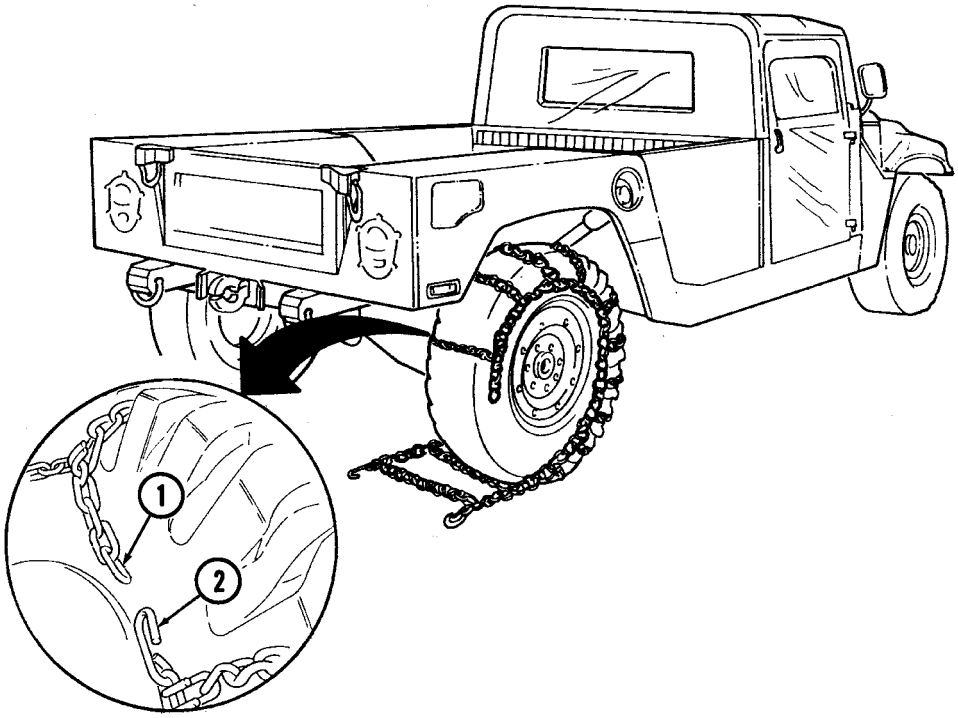

(7) After vehicle is driven one or two miles, stop and retighten tire chains. Ensure as many chain links as possible lie between the sidewall head lugs (5) on both sides of the tires.

(8) After final tightening, secure loose chain linkage to chain assembly (1) with wire or other field expedient method.

(9) Occasionally check tire chains (1) during operations to ensure tire chains (1) have not slipped.

b. Radial Tire Chain Removal.

CAUTION

Remove tire chains from tires as soon as possible after leaving area requiring their use. Prolonged use of tire chains may damage drivetrain.

(1) Detach locking retainer (4) from end fastener (3) and unhook end fastener (3) from chain assembly (1).

(2) Unhook inside fastener (2) from chain assembly (1) and remove chain assembly (1) from tire.

(3) Drive vehicle off chain assembly (1).

(4) Repeat operations listed in steps 1 through 3 above until all tire chain assemblies (1) have been removed from tires.

(5) Stow tire chain assemblies (1) under driver's seat.

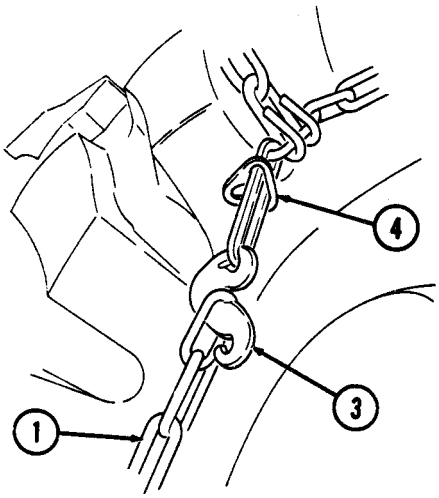

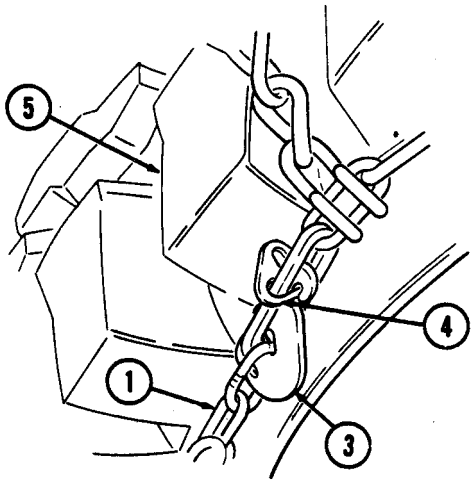

c. Bias Ply Tire Chain Installation.

CAUTION

Tire chains are only used when extra traction is required and must be used as an axle set. Any other combination may cause damage to the drivetrain.

(1) Install quick link (1) through cross-link connector (4) located on each side of tire chain assembly (5) between the third and fourth cross chains (3). Tighten nut (2).

(2) Spread out tire chain assembly (5) and line up with tire.

(3) Cautiously move or drive vehicle over tire chain assembly (5) until wheel is positioned at either end of chain assembly (5), allowing tire chain assembly (5) to be draped up and over tire.

(4) Maneuver tire chain assembly (5) until cross-link sections are evenly spaced around tire. Secure one side of tire chain assembly (5) to tire by hooking inside fastener (6) to chain assembly (5). Tighten chain assembly (5) as much as possible.

(5) Repeat steps 2 through 4 above until all tire chain assemblies have been properly installed.

(6) Hook end fastener (7) to chain assembly (5) and secure with locking retainer (8) to tighten chain assembly (5). Ensure as many chain links as possible lay between the sidewall head lugs (9) on both sides of tires.

(7) Move vehicle forward a few feet and retighten chain assembly (5) to remove any slack from where tire was resting on chain assembly (5). Secure loose chain linkage to chain assembly (5) with wire or other field-expedient method.

(8) After vehicle is driven one or two miles, stop and retighten tire chains. Ensure as many chain links as possible lay between the sidewall head lugs (9) on both sides of the tires.

(9) After final tightening, secure loose chain linkage to chain assembly (5) with wire or other field-expedient method.

(10) Occasionally check tire chains (5) during operations to ensure tire chains (5) have not slipped.

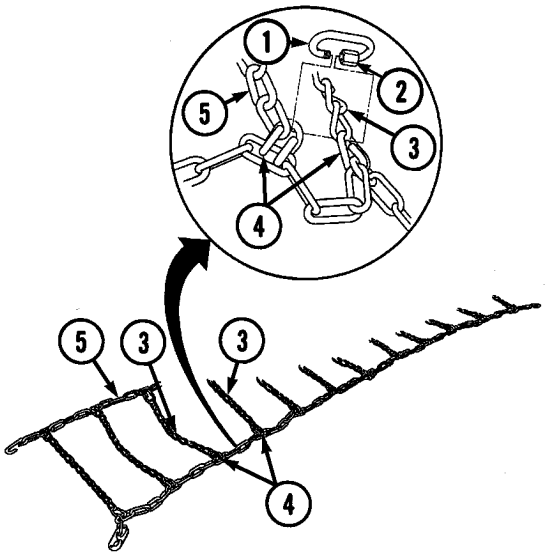

d. Bias Ply Tire Chain Removal.

CAUTION

Remove tire chains from tires as soon as possible after leaving area requiring their use. Prolonged use of tire chains may damage drivetrain.

(1) Detach locking retainer (8) from end fastener (7) and unhook end fastener (7) from chain assembly (5).

(2) Unhook inside fastener (6) from chain assembly (5) and remove chain assembly (5) from tire.

(3) Drive vehicle off chain assembly (5).

(4) Repeat steps 1 through 3 until all tire chain assemblies (5) have been removed from tires.

(5) Stow tire chain assemblies (5) under driver's seat.

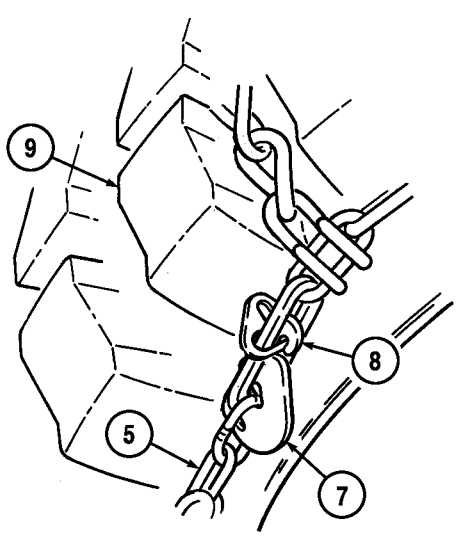

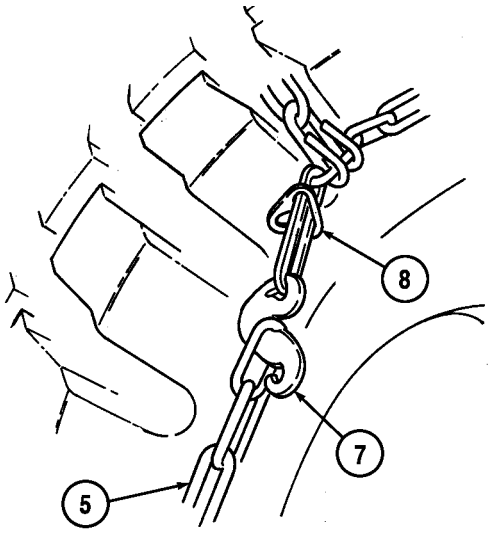

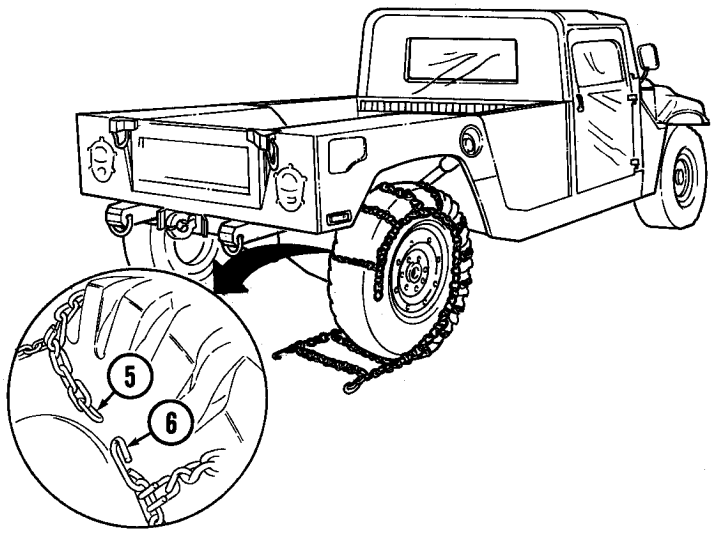

3-23. EMERGENCY FAN CLUTCH OVERRIDE

a. The radiator fan in M998 series vehicles normally activates when engine temperature exceeds 220°F (104°C) and deactivates when engine temperature drops to 190°F (88°C). If overheating occurs in an emergency situation, this procedure will ensure continuous fan operation.

b. Raise and secure hood (para. 3-8).

NOTE

Stop engine (para. 2-12) prior to disconnecting time delay module.

c. Disconnect time delay module connector (1) from control valve connector (2).

d. Start engine (para. 2-10).

e. Check fan for continuous operation. If fan is not operating continuously, stop engine and notify unit maintenance.

f. Lower and secure hood (para. 3-10).

g. Allow engine to cool at idle until engine temperature lowers to normal operating temperature of 190°-230°F (88°-110°C).

h. Proceed to unit maintenance with vehicle. Make certain unit maintenance is notified of emergency service performed on vehicle.

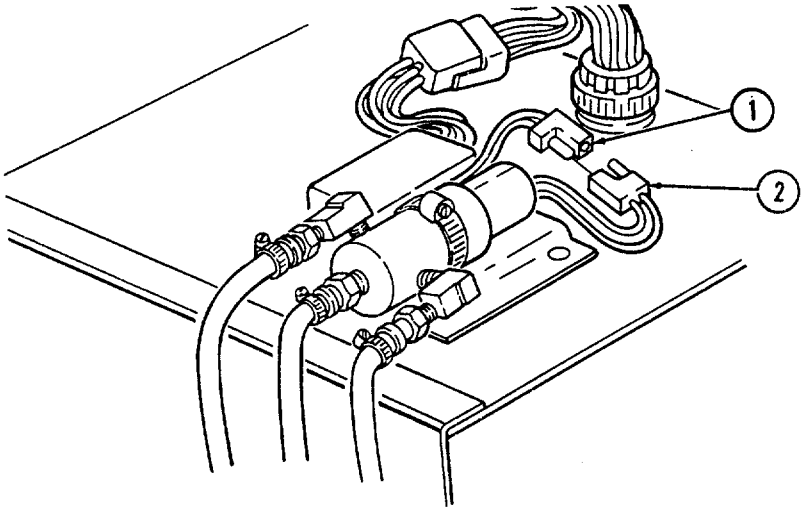

3-24. REARVIEW MIRROR ADJUSTMENT (FOR VEHICLE SERIAL NUMBER 99,999 AND BELOW)

a. Raise and secure hood (para. 3-8).
b. Using screwdriver, loosen special nut (11) securing arm assembly (9) to rearview mirror bracket (4).

NOTE

Right mirror must be adjusted for viewing through the windshield.

c. Adjust mirror head (7) and arm assembly (9) to proper position.
d. Tighten special nut (11) securing arm assembly (9) to rearview mirror bracket (4). Ensure rearview mirror bracket mounting capscrews (3) are secure.
e. If mirror head (7) will not hold adjustment, tighten screws (6).
f. If arm assembly (9) will not hold adjustment, tighten nut (10).
g. If mirror head shaft (5) will not hold adjustment, tighten nut (8).
h. Lower and secure hood (para. 3-8).

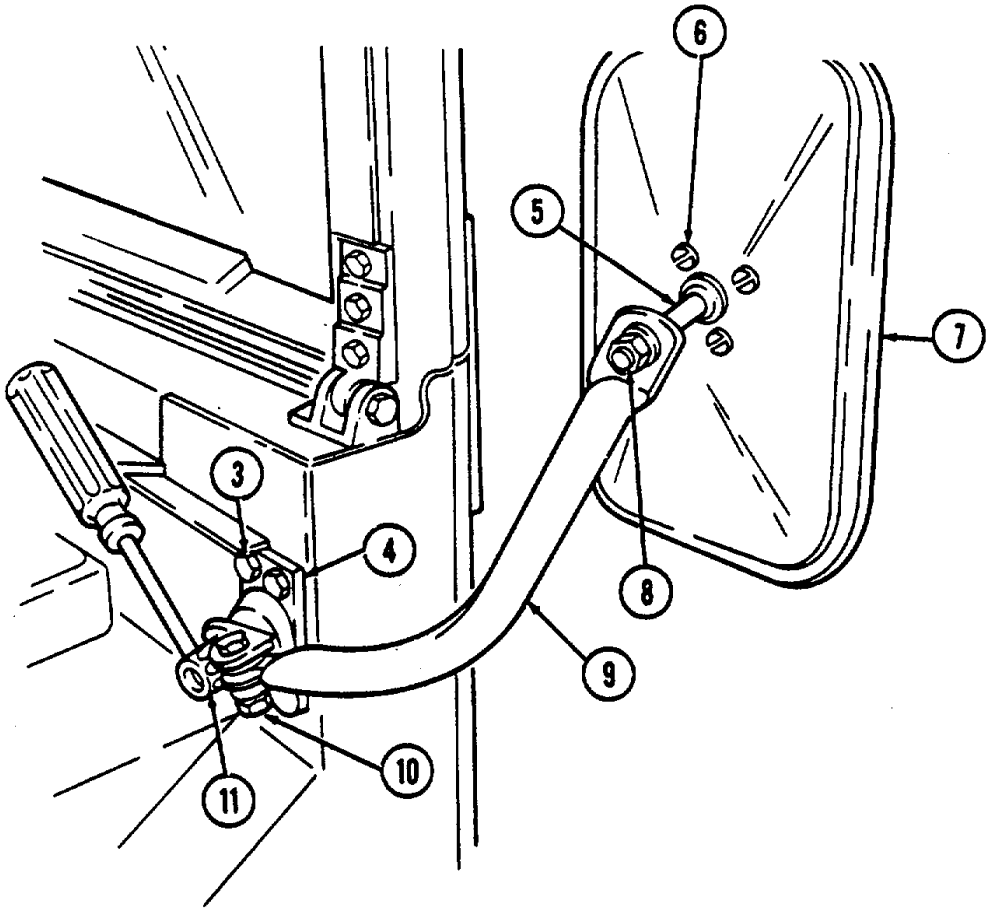

3-25. REARVIEW MIRROR ADJUSTMENT (FOR VEHICLE SERIAL NUMBER 100,000 AND ABOVE)

NOTE

- Prior to mirror adjustment, move mirror arm assembly until assembly locks in place.
- Illustration shows left side adjustment assembly; right side is basically the same.
- The left mirror has been lowered 5 in. (12.7 cm) on M996A2, M997A2, M1025A2, M1035A2, M1043A2, M1045A2, M1097A2, and M1123 vehicles to improve visibility.

a. Left Mirror (Driver's Side). Loosen top nut (5) and position mirror arm (7) forward of windshield frame (4) so that center line of mirror arm (7) is approximately 9-1/2 in. (24.1 cm) from vehicle (1). Tighten top nut (5). Adjust mirror head (6) for maximum visibility.

b. Right Mirror (Passenger's Side). Loosen top nut (5) and position mirror arm (3) forward of windshield frame (4) so that center line of mirror arm (3) is approximately 7-3/4 in. (19.7 cm) from vehicle (1). Tighten top nut (5). Adjust mirror head (2) for maximum visibility.

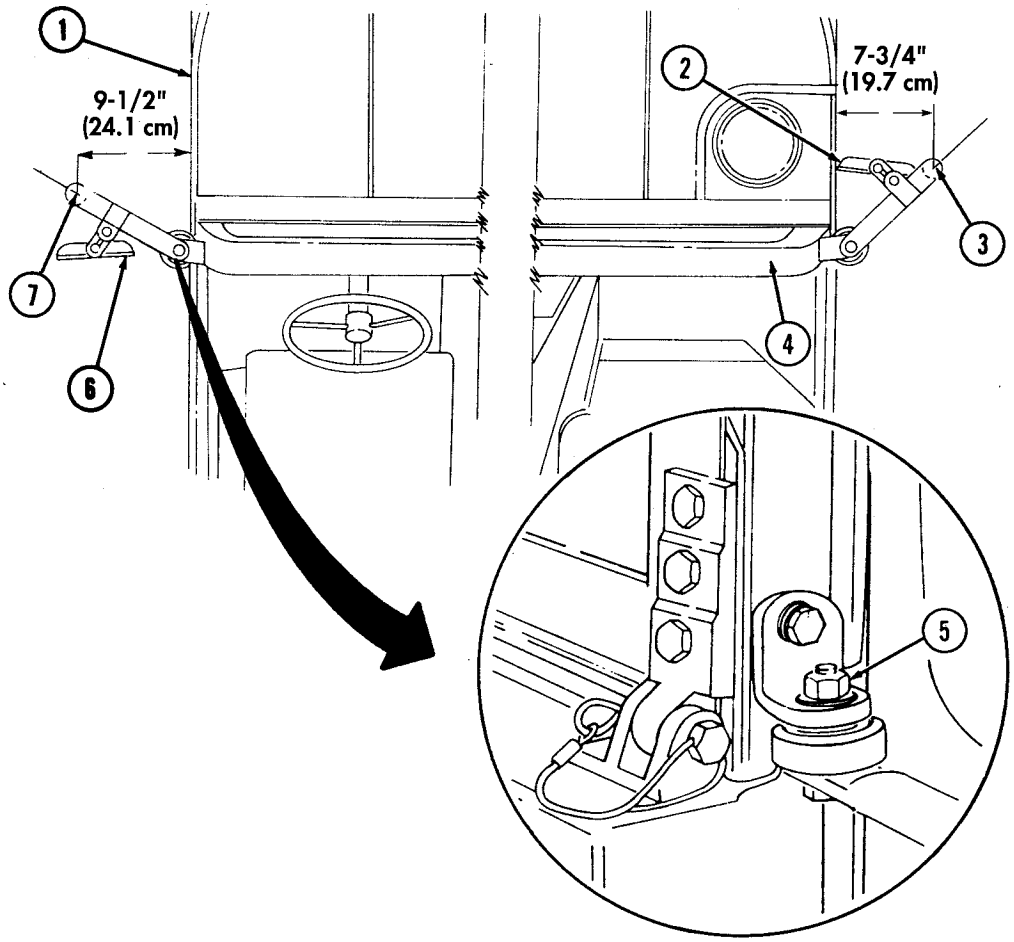

3-26. WHEEL ASSEMBLY REPLACEMENT

WARNING

- Always apply parking brake and block opposite wheel before removing wheel assembly. Avoid removing wheel assembly when vehicle is on sloping terrain. Injury to personnel, or damage to equipment may result.
- Remove only the inner group of nuts when removing a wheel from the vehicle. Removing the outer nuts which hold the rim together while the wheel assembly is inflated could result in serious injury or death.
- Ensure scissors jack is positioned directly under the lower control arm, next to the wheel being replaced. Do not place at any other location such as frame rails. Injury to personnel, or damage to equipment may result.
- Radial and bias ply tires should not be mixed on the same vehicle. Injury to personnel or damage to equipment may result.
- Do not use bias ply tires on the M1097, M1123, or any A1 and A2 models, under any condition. Due to tire load ratings and vehicle load carrying capabilities, only the load range "D" radial tire can be used on the M1097, M1123, and all A1 and A2 models.

NOTE

Check tire size designator on sidewall for tire construction identification: 36 x 12.50-16.5LT-Bias ply, 37 x 12.50R16.5LT-Radial.

a. Wheel Assembly Removal.

(1) Place jack (11) under lower control arm (12) next to wheel being replaced. Center jack (11) squarely under point of contact.

(2) Loosen eight lug nuts (9), but do not remove.

(3) Raise vehicle high enough to allow removal of wheel assembly (8).

(4) Remove eight lug nuts (9) securing wheel assembly (8) to geared hub (10) and remove wheel assembly (8).

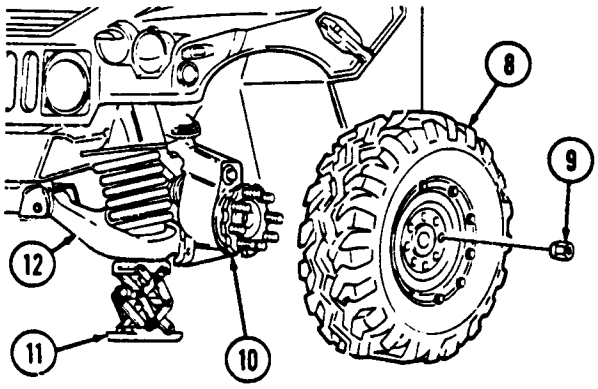

TIGHTENING SEQUENCE

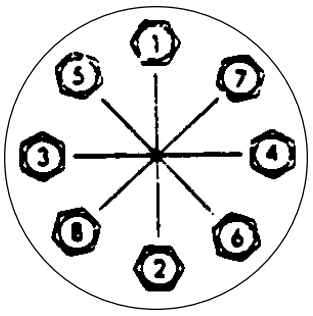

b. Wheel Assembly Installation.

(1) Install wheel assembly (8) to geared hub (10) and secure with eight lug nuts (9). Tighten lug nuts (9) to full engagement of wheel assembly (8) to geared hub (10).

(2) Slowly lower vehicle and remove jack (11).

(3) Tighten eight lug nuts (9) in the sequence indicated.

(4) Notify unit maintenance to tighten lug nuts (9) to proper torque as soon as possible.

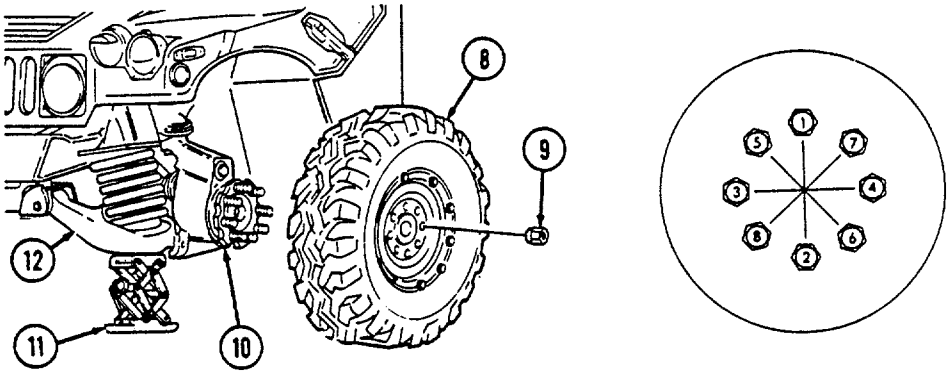

3-27. HEATING, VENTILATION, AND AIR-CONDITIONING AIR INTAKE FILTER SERVICE

WARNING

- NBC contaminated filters must be handled using adequate precaution (FM 3-5) and must be disposed of by trained personnel. After Nuclear, Biological, or Chemical (NBC) exposure of this vehicle, all air filters shall be handled with extreme caution. Unprotected personnel may experience injury or death if residual toxic agents or radioactive material are present. Servicing personnel will wear protective overgarments, mask, hood, and chemical protective gloves and boots. All contaminated air filters will be placed into double lined plastic bags and moved immediately to a temporary segregation area away from the work site. If contaminated by radioactive dust, the Company NBC team will measure the radiation before removal. The NBC team will determine the extent of safety procedures required. The temporary segregation area will be marked with the appropriate NBC signs. Final disposal of contaminated air filters will be in accordance with local Standard Operating Procedure (SOP).
- Failure to observe above warnings may result in injury or death.

a. M996 and M996A1 Filter Removal.

(1) Loosen seven captive wing head screws (2) securing panel (1) to body (3) and remove panel (1).

(2) Slide filter (4) out of mounting bracket (5) and remove filter (4).

b. M997, M997A1, and M997A2 Filter Removal.

(1) Remove two capscrews (6), lockwashers (14), and washers (13) securing front cover panel (12) to panel (8).

(2) Remove four screws (11), lockwashers (10), and washers (9) securing front cover panel (12) to body (7) and remove panel (12).

(3) Remove two screws (18) securing frame (17) and filter (16) to air intake assembly (15) and remove frame (17) and filter (16).

M996 AND M996A1 ONLY

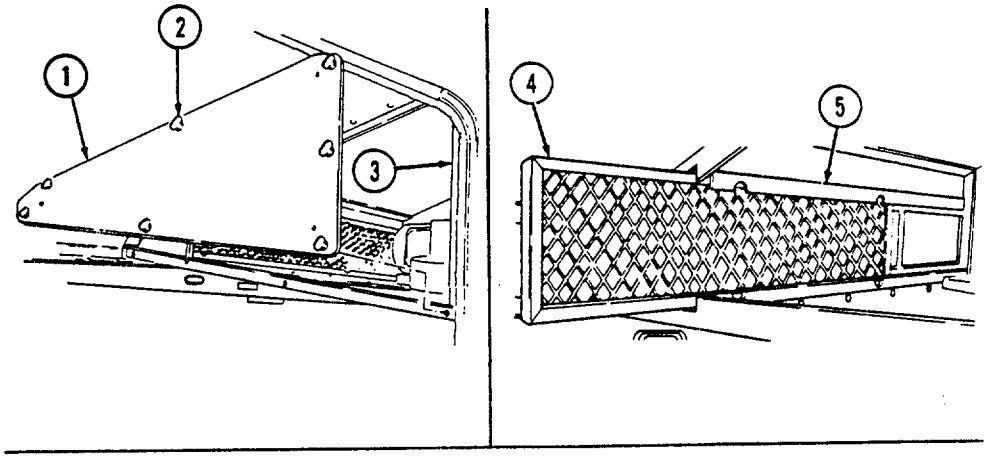

M997,M997A1, AND M997A2 ONLY

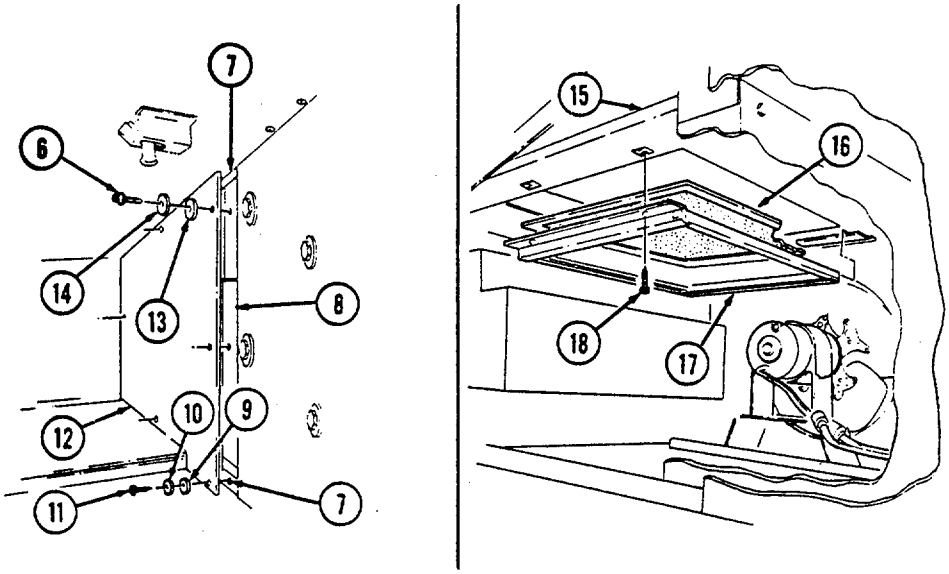

c. Inspection. Inspect filters for tears, rips, contaminants, or other damage. Inspect filter frames for cracks, bends, or other damage. If filters or frames are damaged, notify unit maintenance.

d. M996 and M996A1 Filter Installation.

(1) Slide filter (4) into mounting bracket (5).

(2) Install cover panel (1) on body (3) with seven captive wing head screws (2).

e. M997, M997A1, and M997A2 Filter Installation.

(1) Install filter (16) and frame (17) on air intake assembly (15) with two screws (18).

(2) Install front cover panel (12) to body (7) and secure with four washers (9), lockwashers (10), and screws (11).

(3) Secure front cover panel (12) to panel (8) with two washers (13), lockwashers (14), and capscrews (6).

M996 AND M996A1 ONLY

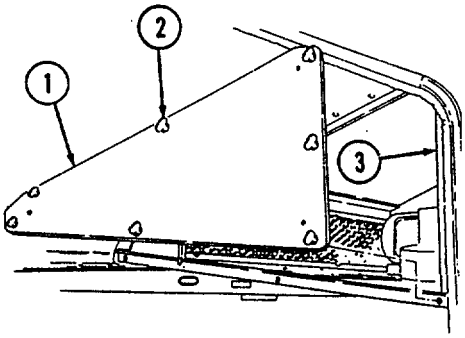

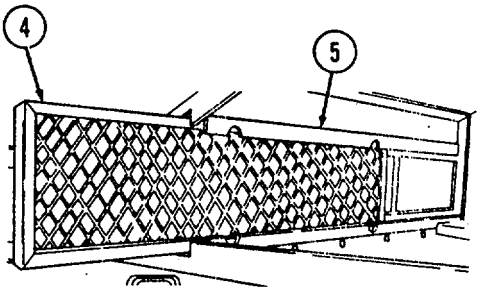

M997, M997A1, AND M997A2 ONLY

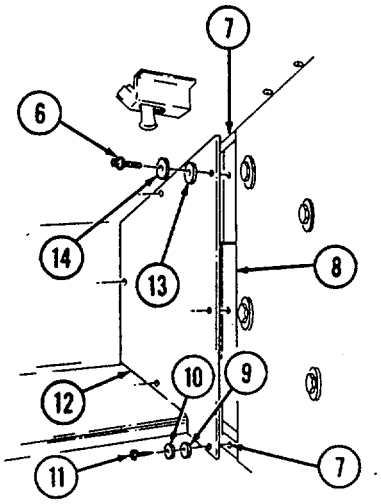

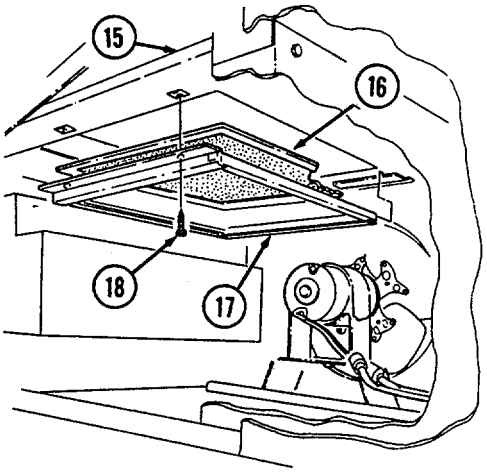

3-28. AMBULANCE INTERIOR LIGHT BULB REPLACEMENT

a. General. Replacement bulbs are located in the storage compartment of the vehicle.

WARNING

When changing light bulbs, ensure the system in which the bulb is being replaced is turned off. Failure to do so may cause injury.

NOTE

Ceiling white light and blackout light assemblies are removed and installed basically the same. This procedure covers the ceiling white light assemblies.

b. Ceiling Light Bulb Removal.

(1) Remove two screws (3) securing lens (4) to light assembly (2). Remove lens (4).

(2) Press light bulb (5) into socket (1), twist counterclockwise, and remove light bulb (5).

c. Ceiling Light Bulb Installation.

(1) Install light bulb (5) into socket (1), press in, and twist clockwise to secure.

(2) Install lens (4) to light assembly (2) and secure with two screws (3).

d. Spotlight Bulb Removal.

NOTE

M996, M996A1, M997, M997A1, and M997A2 vehicles spotlight bulb replacement is basically the same. This procedure covers M996 and M996A1 spotlight bulb replacement for M996 and M996A1 vehicles.

(1) Remove base (8) from wall socket (7).

(2) Remove four screws (6) securing lens assembly (11) to base (8) and remove lens assembly (11).

(3) Press light bulb (10) into socket (9), twist counterclockwise, and remove light bulb (10).

e. Spotlight Bulb Installation.

(1) Install light bulb (10) into socket (9), press in, and twist clockwise to secure.

(2) Install base (8) on lens assembly (11) and secure with four screws (6).

(3) Install base (8) into wall socket (7).

f. Test Interior Lights Operation. Refer to para. 2-61.

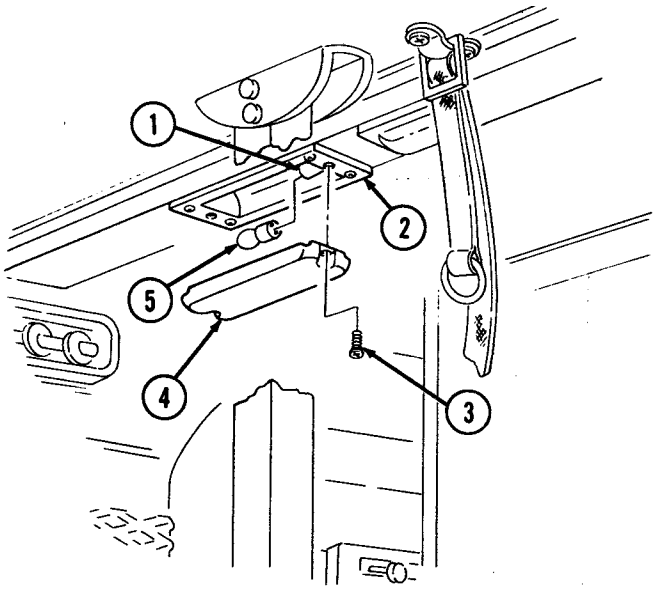
1
2
3
4
5

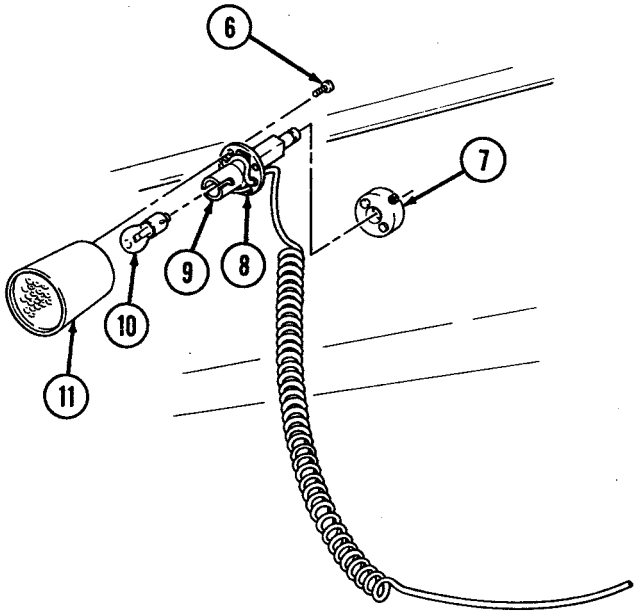
6
7
8
9
10
11

3-29. RESTRAINING NET INSTALLATION

Restraining Net Installation.

(Models M966, M966A1, M1025, M1025A1, M1026, M1026A1, M1036, M1043, M1043A1, M1044, M1044A1, M1045, M1045A1, M1046, M1046A1, and M1121).

(1) Position restraining net (2) behind rear seats (1) and loop three straps (3) through roof brackets (4). Do not tighten straps (3).

(2) Route three straps (5) on restraining net (2) through tiedowns (6) on cargo floor (7). Tighten straps (3) and (5).

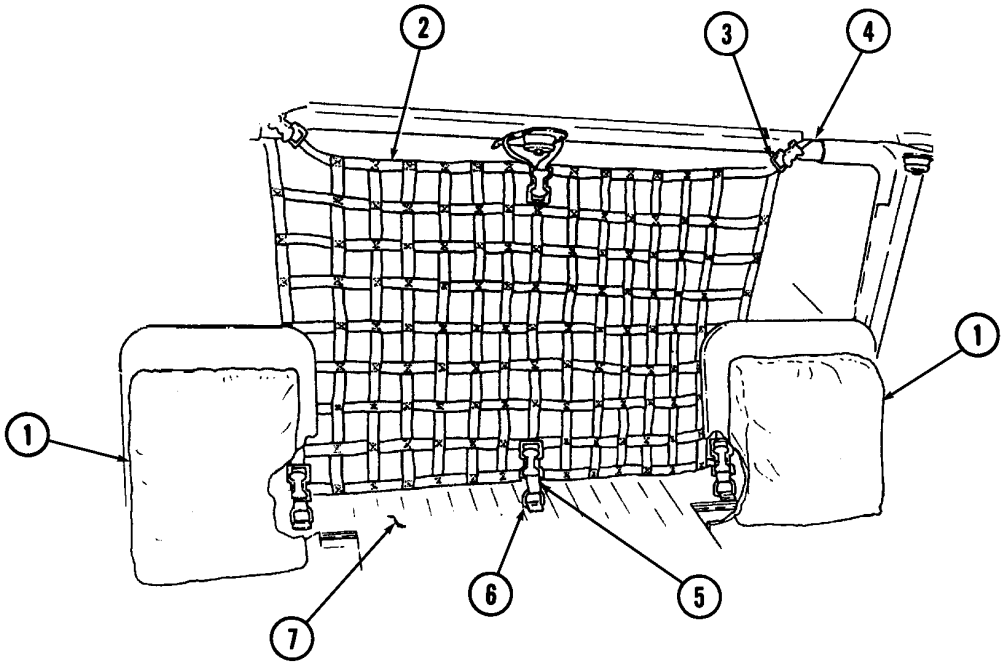

APPENDIX A
REFERENCES

A-1. SCOPE

This appendix lists all forms, field manuals, and technical manuals for use with this vehicle.

A-2. DEPARTMENT OF THE ARMY PAMPHLETS

Consolidated Index of Army Publications and Blank Forms. . . . . DA Pam 25-30
The Army Maintenance Management System (TAMMS) . . . . DA Pam 738-750

A-3. FORMS

Recommended Changes to Publications and Blank Forms . . . . . DA Form 2028
Recommended Changes to Equipment Technical Publications . . . . . DA Form 2028-2
Hand Receipt/Annex Number . . . . . DA Form 2062
Exchange Tag . . . . . DA Form 2402
Equipment Inspection and Maintenance Worksheet . . . . . DA Form 2404
Equipment Inspection and Maintenance Worksheet (Automated) . . . . . DA Form 5988-E
Maintenance Request . . . . . DA Form 2407
Maintenance Request (Automated) . . . . . DA Form 5990-E
Preventive Maintenance Schedule and Record . . . . . DD Form 314
Preventive Maintenance Schedule and Record (Automated) . . DA Form 5986-E
Quality Deficiency Report . . . . . SF 368

A-4. FIELD MANUALS

NBC Decontamination . . . . . FM 3-5
Operation and Maintenance of Ordnance Materiel in Cold Weather (0° to -65°F) . . . . . FM 9-207
Vehicle Recovery Operations . . . . . FM 20-22
First Aid for Soldiers . . . . . FM 21-11
Manual for the Wheeled Vehicle Driver . . . . . FM 21-305
Browning Machinegun Caliber .50 HB, M2 . . . . . FM 23-65
Machinegun 7.62, M60. . . . . FM 23-67
Basic Cold Weather Manual . . . . . FM 31-70
Northern Operation. . . . . FM 31-71
Army Motor Transport Units and Operations . . . . . FM 55-30

Desert Operations . . . . . FM 90-3
Jungle Operations . . . . . FM 90-5
Mountain Operations . . . . . FM 90-6

A-5. TECHNICAL MANUALS

Machine gun, Caliber .50 Browning, M2 . . . . . TM 9-1005-213-10
Machine gun, 7.62 MM, M60 . . . . . TM 9-1005-224-10
TOW Weapon System, Guided Missile System,
Operator and Organizational Maintenance Manual . . . . . TM 9-1425-472-12
TOW 2 Weapon System, Guided Missile System
Operator and Organizational Maintenance Manual . . . . . TM 9-1425-450-12
Materials used for Cleaning, Preserving, Abrading, and
Cementing Ordnance Materiel and Related Material
(Including Chemicals) . . . . . TM 9-247
Operator's, Unit, Direct Support and General Support
Maintenance Manual for Care, Maintenance,
Repair, and Inspection of Pneumatic Tires
and Inner Tubes.. . . . . TM 9-2610-200-14
Operator's Organizational, Direct Support and
General Support Maintenance Manual for
Lead-Acid Storage Batteries. . . . . TM 9-6140-200-14

A-6. TECHNICAL BULLETINS

Security of Tactical Wheeled Vehicles . . . . . TB 9-2300-422-20
Equipment Improvement Report and Maintenance Digest . . . . TB 43-0001-39
Use of Antifreeze Solutions, Antifreeze Extender, and
Cleaning Compounds Test Kit in Engine Cooling Systems . . . . . TB 750-651

A-7. MISCELLANEOUS PUBLICATIONS

Hand Receipt . . . . . TM 9-2320-280-10-HR

A-8. ARMY REGULATIONS

The Army Integrated Publishing and Printing Program . . . . . AR 25-30
Dictionary of United States Army Terms . . . . . AR 310-25
Prevention of Motor Vehicle Accidents . . . . . AR 385-55
Army Materiel Policy and Retail Maintenance Operation . . . . . AR 750-1
Expendable/Durable Items
(Except: Medical, Class V, Repair Parts, and Heraldic Items). . . . CTA 50-970

APPENDIX B
COMPONENTS OF END ITEM AND BASIC ISSUE ITEMS LISTS

Section I. INTRODUCTION

B-1. SCOPE

This appendix lists components of end item and basic issue items for M998 series vehicles to help you inventory items required for safe and efficient operation.

B-2. GENERAL

The components of End Item and Basic Issue Items Lists are divided into the following sections:

a. Section II. Components of End Item. These items are installed in the vehicle at time of manufacture or rebuild. (None authorized for M998 series.)

b. Section III. Basic Issue Items (BII). These are the minimum essential items required to place M998 series vehicles in operation, to operate them, and to perform emergency repairs. Although shipped separately packaged, BII must be with the vehicle during operation and whenever it is transferred between property accounts. The illustrations will assist you with hard-to-identify items. This manual is your authority to request/requisition replacement BII, based on TOE/MTOE authorization of the end item.

B-3. EXPLANATION OF COLUMNS

The following provides an explanation of columns found in the tabular listings:

a. Column (1) - Illustration Number (Illus Number). This column indicates the number of the illustration in which the item is shown.

b. Column (2) - National Stock Number. Indicates the National stock number assigned to the item and will be used for requisitioning purposes.

c. Column (3) - Description. Indicates the Federal item name and, if required, a minimum description to identify the item. The last line for each item indicates the CAGEC (in parentheses) followed by the part number. If item needed differs for different models of this vehicle, the model is shown under the "Usable On Code" heading in this column. These codes are identified as:

Code	Used On	Code	Used On
(Blank)	All	H18/B18	M1026/M1026A1
HVY/AVY/BVY	M1097/M1097A1/M1097A2	H20/A20/B20	M1035/M1035A1/M1035A2
H11/A11	M966/M966A1	H21	M1037
H12	M1036	H24/A24/B24	M1045/M1045A1/M1045A2
H13/A13	M998/M998A1	H25/A25/B25	M1043/M1043A1/M1043A2
H14/A14	M1038/M1038A1	H26/A26	M1044/M1044A1
H15/A15/B15	M997/M997A1/M997A2	H27/A27	M1046/M1046A1
H16/B16	M996/M996A1	H28	M1042
H17/B17/C17	M1025/M1025A1/M1025A2	MMM	M1121
		NNN	M1123

d. Column (4) - Unit of Issue (U/I). Indicates a determinate amount or quantity of an item that will be issued. This unit is expressed by a two-character alphabetical abbreviation; i.e., (ea, pr).

e. Column (5) - Quantity Required (Qty rqr). Indicates the quantity of the item authorized to be used with/on the vehicle.

Section II. COMPONENTS OF END ITEM

These items are installed in the vehicle at the time of manufacture or rebuild.

(1) Illus Number	(2) National Stock Number	(3) Description FSCM and Part Number	Usable On Code	(4) U/I	(5) Qty rqr
1	3120-01-188-5082	BEARING, SLEEVE: Pintle Adapter (located in the armament mounting assembly) (19207) 12340310	A25, A26, B17, B18 H17, H18 H25, H26	EA	1
	5305-01-204-4190	a. Setscrew 3/8 - 24 (7X677) 9428747		EA	4
		b. Pintle Adapter (19207) 12340310-1		EA	1

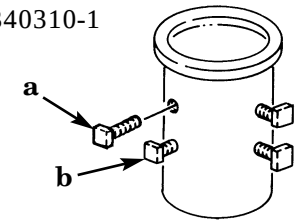

Section III. BASIC ISSUE ITEMS

(1) Illus Number	(2) National Stock Number	(3) Description CAGEC and Part Number	Usable On Code	(4) U/I	(5) Qty rqr
1		TM 9-2320-280-10 (in cotton duck pamphlet bag)		EA	1
		TM 9-2320-280-10-HR (in cotton duck pamphlet bag)		EA	1
2	3040-00-392-2962	ADAPTER, HOUSING: filter unit inlet [in NBC stowage compartment] [in front of right litter rack] (81361) C5-66-232	H15, A15, B15 H16, B16	EA	4 2
3	5110-00-293-2336	AX, SINGLE BIT: 4 lb head weight, 36-1/2 in. long, type I, class 1, design A [in tool tray] (19207) 6150925		EA	1
4	2540-00-670-2459	BAG, ASSEMBLY, PAMPHLET: cotton duck, 3 in. x 9-1/4 in. x 11-1/4 in. [under driver's seat] (19207) 11676920		EA	1
5	5140-00-772-4142	BAG, TOOL, ENVELOPE TYPE: 10 in. x 20 in., w/flap [on H21 and H28, item is stored behind driver's seat; on all other vehicles, the item is stored under the driver's seat] (81349) MIL-B-43648-4		EA	1

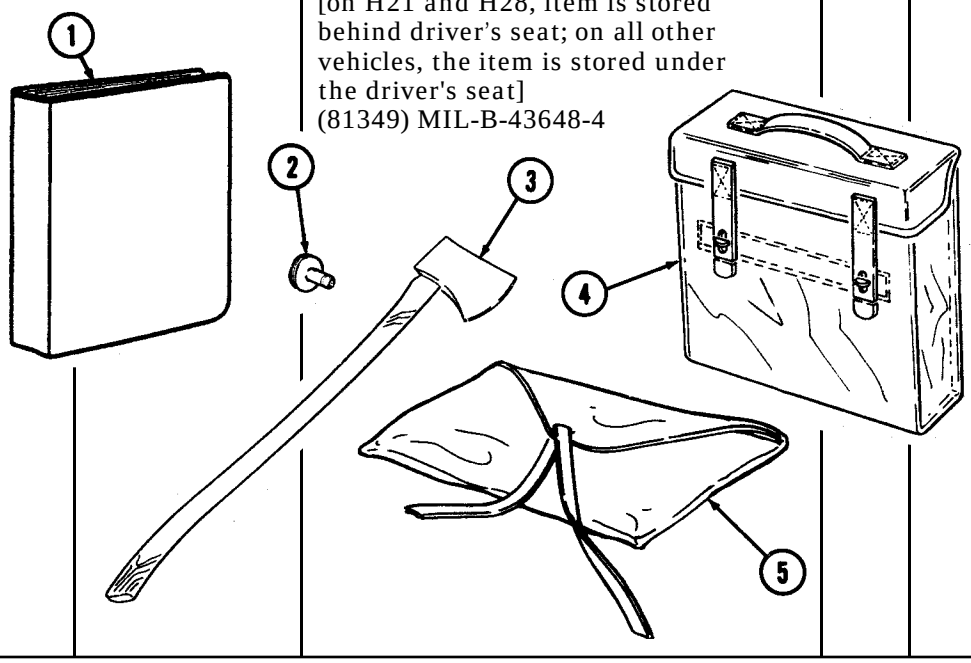

Section III. BASIC ISSUE ITEMS (Cont'd)

(1) Illus Number	(2) National Stock Number	(3) Description CAGEC and Part Number	Usable On Code	(4) U/I	(5) Qty rqr
6	7510-00-889-3494	BINDER, LOOSE-LEAF: equipment log book, 6-7/20 in. x 9-1/2 in. (19207) 11677003		EA	1
7	4210-01-149-1356	FIRE EXTINGUISHER: hand, type 1, class 2, 5 lb capacity, w/bracket (all except “A2” and M1123 series vehicles) [for bracket only, notify unit maintenance] (19207) 12255633-1		EA	1
7.1		FIRE EXTINGUISHER: hand, type 1, class 2, size 5 (all “A2” and M1123 series vehicles) (19207) 12460466		EA	1
8	6545-00-922-1200	FIRST-AID KIT, GENERAL PURPOSE: 3 in. x 5-13/16 in. x 8-7/32 in. [under driver’s seat] (19207) 11677011		EA	1
9	7510-01-065-0166	FOLDER, EQUIPMENT RECORD: 2-1/2 in. x 8 in. x 10 in. [in pamphlet bag] (72094) 43986-1		EA	1
10	5120-01-032-6042	HANDLE, JACK: 58-1/4 in. long (nom), folding type, OD finish [on four door vehicles, items are stored under rear seat; on two door vehicles, items are stored under driver’s and/or commander’s seat] (19207) 12255298		EA	1

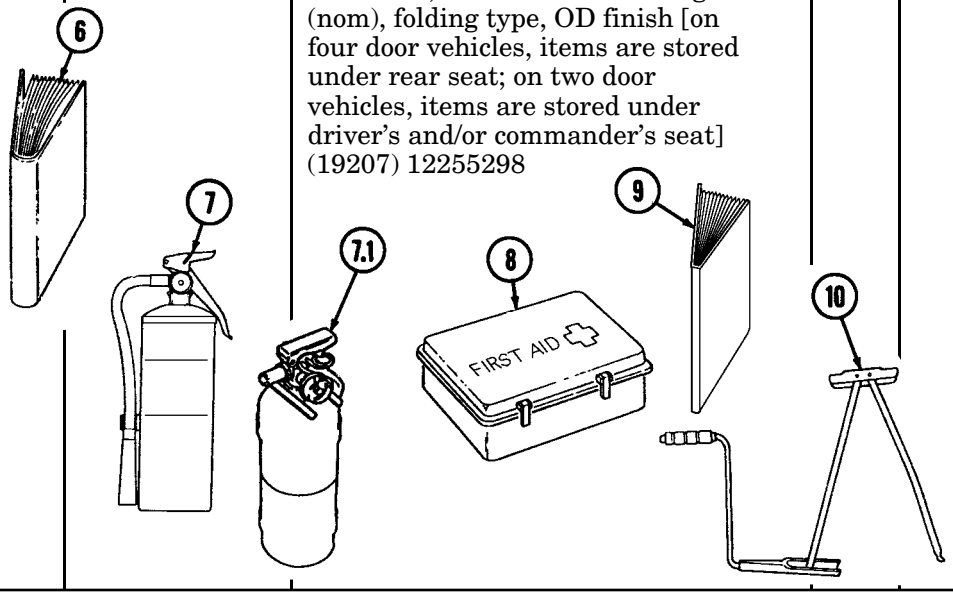

Section III. BASIC ISSUE ITEMS (Cont'd)

(1) Illus Number	(2) National Stock Number	(3) Description CAGEC and Part Number	Usable On Code	(4) U/I	(5) Qty rqr
11	5120-00-288-6574	HANDLE, MATTOCK-PICK: clay, 36 in. long [in tool tray] (19207) 11677021		EA	1
12		HOSE, AIR BREATHING: 6 ft [in NBC stowage compartment] [in front of right litter rack] consists of:	H15, A15, B15	EA	6
			H16, B16		4
	4720-00-279-0093	a. Hose, 6 ft (81361) C5-19-916-2			
	4720-00-269-3760	b. Clamp, hose (2 ea) (96906) MS22064-5			
	4730-01-138-7152	c. Coupling half, quick (84987) C5-19-1900			
	4240-00-977-8503	d. Connector, orifice (81361) C5-19-1830			

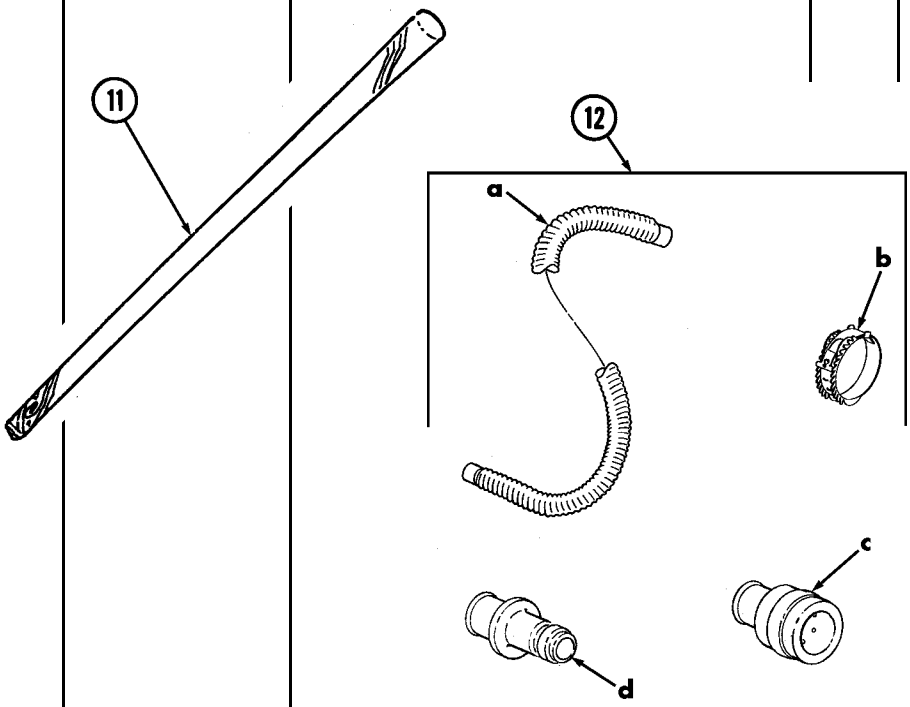

Section III. BASIC ISSUE ITEMS (Cont'd)

(1) Illus Number	(2) National Stock Number	(3) Description CAGEC and Part Number	Usable On Code	(4) U/I	(5) Qty rqr
13		HOSE, AIR BREATHING: 9 ft		EA	
		[in NBC stowage compartment]	H15,		1
		[in front of right litter rack]	A15,		
		consists of:	B15		
			H16,		1
			B16		
	4720-00-279-0094	a. Hose, 9 ft (81361) C5-19-916-3			
	4720-00-269-3760	b. Clamp, hose (2 ea) (96906) MS22064-5			
	4730-01-138-7152	c. Coupling half, quick (84987) C5-19-1900			
	4240-00-977-8503	d. Connector, orifice (81361) C5-19-1830			

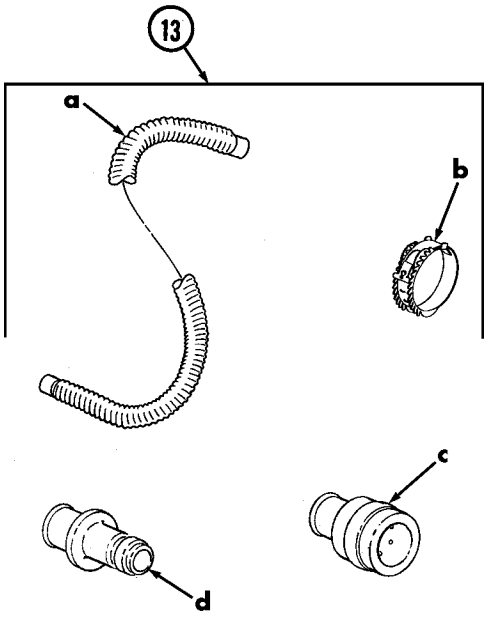

Section III. BASIC ISSUE ITEMS (Cont'd)

(1) Illus Number	(2) National Stock Number	(3) Description CAGEC and Part Number	Usable On Code	(4) U/I	(5) Qty rqr
14	5120-00-106-7598	JACK, SCISSORS, HAND: mechanical, 2-ton cap., 2-1/4 in. closed to 18-1/2 in. (max) open, OD finish [on four door vehicles, items are stored under rear seat; on two door vehicles, items are stored under driver's and/or commander's seat] (19207) 11640481	All Except NNN, HVY, "A1" and "A2" vehicles	EA	1

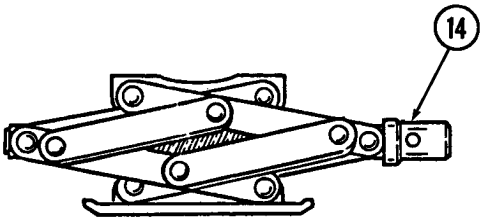

Section III. BASIC ISSUE ITEMS (Cont'd)

(1) Illus Number	(2) National Stock Number	(3) Description CAGEC and Part Number	Usable On Code	(4) U/I	(5) Qty rqr
15	5120-01-375-0070	JACK, SCISSORS, HAND: mechanical, 3.5-ton cap., 6.33 in.closed to 18.70 in. (max) open, OD finish [on four door vehicles, items are stored under rear seat; on two door vehicles, items are stored under driver's and/or commander's seat. Jack and tools stored on right splash shield in jack stowage box] (34623) 5939822	All NNN, HVY, "A1" and "A2" vehicles	EA	1
	5120-01-430-3123	a. Jack, scissors (19207) (12447042)			
	5120-01-429-6964	b. Wrench, ratchet (19207) (12447039)			
	5120-01-429-6065	c. Extension, jack handle (19207) (12447040)			
	5120-01-429-8137	d. Handle, jack (19207) 12447041)			
	5140-01-429-6945	e. Bag, stowage (19207) (12447043			

15

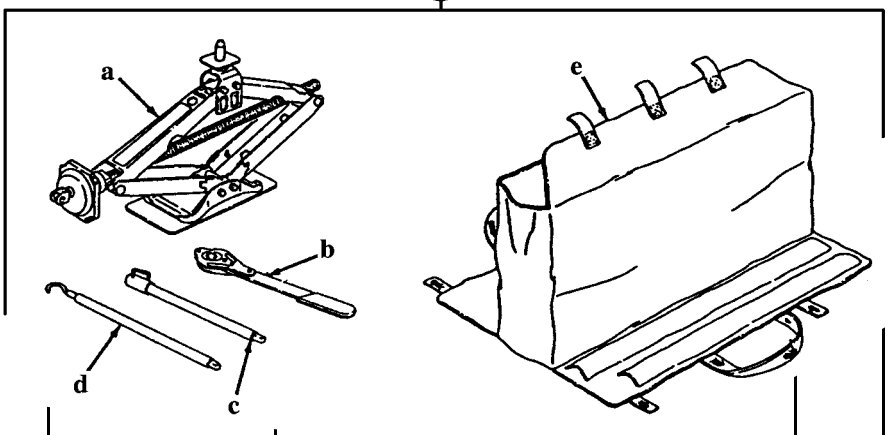

Section III. BASIC ISSUE ITEMS (Cont'd)

(1) Illus Number	(2) National Stock Number	(3) Description CAGEC and Part Number	Usable On Code	(4) U/I	(5) Qty rqr
16	4240-00-763-2464	MASK: head pieces gas, patient protective [in NBC stowage compartment] [in front right litter rack] (81361) D5-70-23	H15, A15, B15, H16, B16	EA	4 2
17	5120-00-243-2395	MATTOCK: pick, head, clay, 19-1/2 in. long [in tool tray] (19207) 11677022		EA	1
17.1	5120-01-416-8568	MAX TOOL KIT: combination tool, hand multipurpose [M1025A2, M1043A2, and M1045A2 - behind left rear seat; M1035A2 M1097A2, - and M1123 - on tunnel; M997A2 - in right footwell] (19207) 57K3528	All NNN and "A2" vehicles	EA	1
	5140-01-416-8569	a. Carrying case (0T9K4) 595-030			
	5110-01-416-7827	b. Ax (0T9K4) 595-010			
	5110-01-416-7830	c. Ax sheath (0T9K4) 595-020			
	5120-01-416-8570	d. Shovel attachment (0T9K4) 595-040			
	5120-01-416-8571	e. Mattock attachment (0T9K4) 595-050			
	5120-01-416-8573	f. Pick attachment (0T9K4) 595-060			

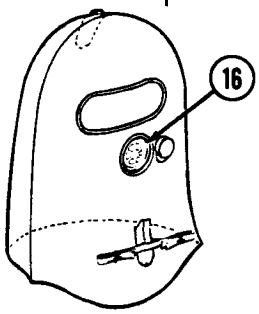

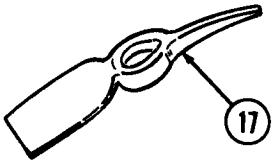

Section III. BASIC ISSUE ITEMS (Cont'd)

(1) Illus Number	(2) National Stock Number	(3) Description CAGEC and Part Number	Usable On Code	(4) U/I	(5) Qty rqr
	5120-01-416-8572	g. Broad pick attachment (0T9K4) 595-070			
	5120-01-416-8577	h. Rake-hoe attachment (0T9K4) 595-080			
	5120-01-416-8574	i. Rake-hoe fastener (0T9K4) 595-090			
	5120-01-416-8575	j. Safety locking pins (0T9K4) 595-999			

17.1

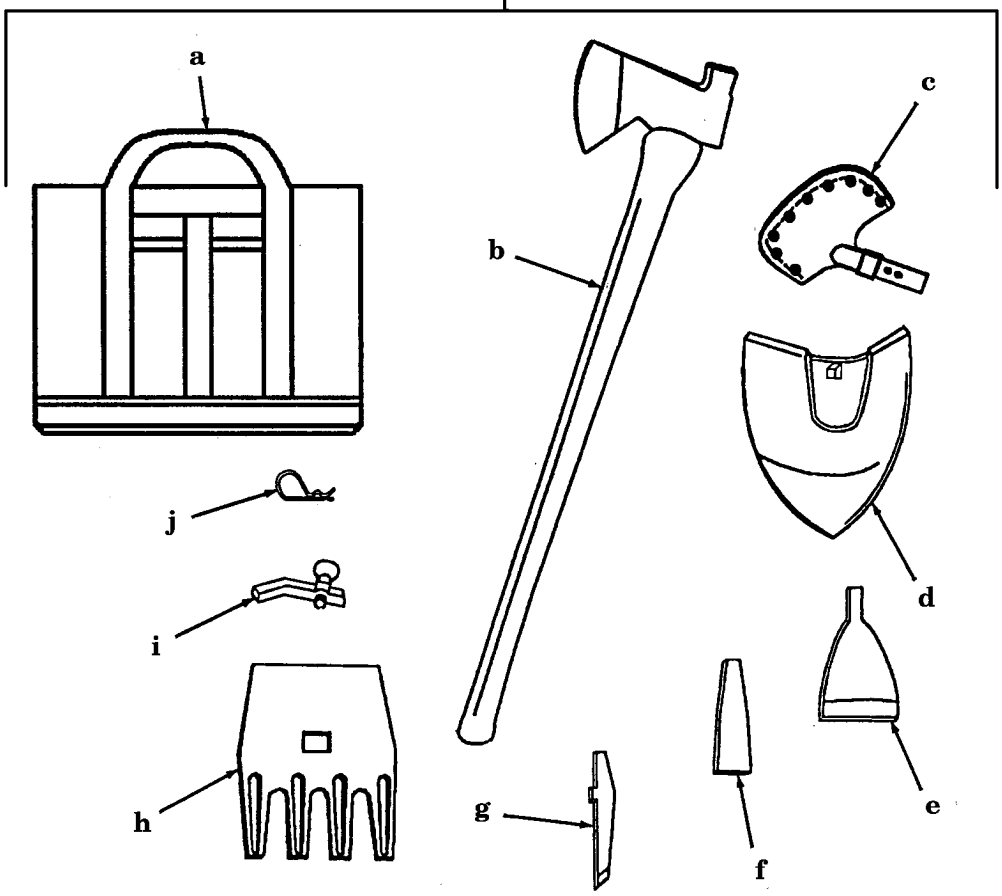

Section III. BASIC ISSUE ITEMS (Cont'd)

(1) Illus Number	(2) National Stock Number	(3) Description CAGEC and Part Number	Usable On Code	(4) U/I	(5) Qty rqr
18	5120-00-223-7397	PLIERS, SLIP JOINT: combination, slip joint, straight nose w/cutter, 8 in. long, phosphate finish [in tool bag] (19207) 11655775-3		EA	1
19	5120-00-234-8913	SCREWDRIVER, CROSS TIP: Phillips type, plastic handle, point no. 2, 7-1/2 in. long [in tool bag] (19207) 11655777-12		EA	1
20	5120-00-227-7356	SCREWDRIVER, FLAT TIP: flared sides, plastic handle, round blade, 3/16 in. wide tip, 7-3/4 in. long (55719) SSDE-66		EA	1
21	5120-00-293-3336	SHOVEL, HAND: round point, 40-1/2 in. long [in tool tray] (19207) 11655784		EA	1
22	6240-00-060-4707	SPARE BULB KIT: lamp, incandescent, bulbs (2 ea), GE 1309, ceiling light bulbs (2 ea) (08806) GE 1309	H15, A15, B15, H16, B16	EA	1

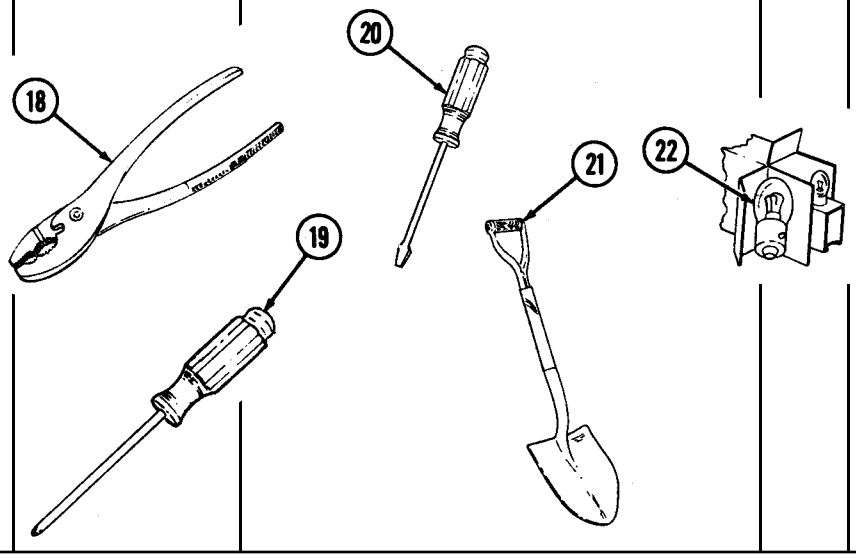

Section III. BASIC ISSUE ITEMS (Cont'd)

(1) Illus Number	(2) National Stock Number	(3) Description CAGEC and Part Number	Usable On Code	(4) U/I	(5) Qty rqr
23	4910-01-313-8839	SPREADER BAR ASSEMBLY: rigging for airlift [below right lower litter rack] (19207) 12342102	H15, A15, B15, H16, B16	EA	1
24	5120-00-240-5328	WRENCH, ADJUSTABLE: open end, 8 in. long [in tool bag] (34623) MS15461-3		EA	1
25	5120-01-156-7296	WRENCH, WHEEL LUG: 1-15/32 - 1-19/64 in. socket dia., 1-3/16 in. socket depth, 17-1/2 in. long [on four door vehicles, item is stored under rear seat; on two door vehicles, item in stored under driver's and/or commander's seat] (11862) 14009303		EA	1

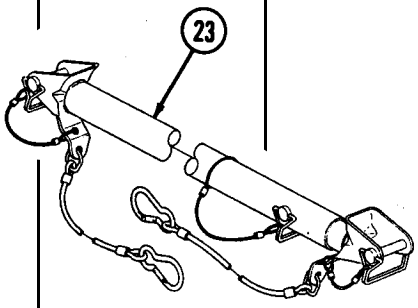

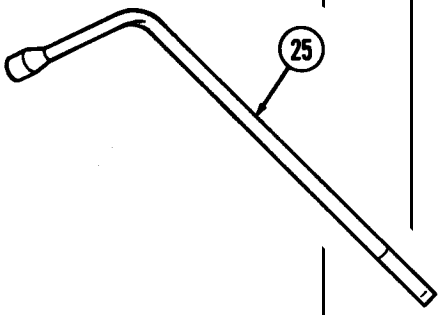

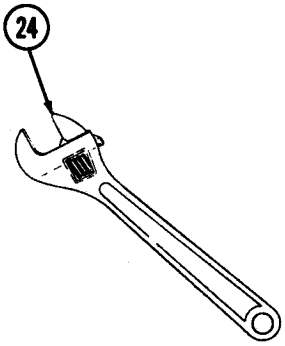

APPENDIX C
ADDITIONAL AUTHORIZATION LIST

Section I. INTRODUCTION

C-1. SCOPE

This appendix lists additional items authorized for support of M998 series vehicles.

C-2. GENERAL

This list identifies items that do not have to accompany the vehicle and do not have to be turned in with it. These items are all authorized to you by CTA, MTOE, TDA, or JTA.

C-3. EXPLANATION OF LISTING

National stock numbers, descriptions, and quantities are provided to help you identify and request the additional items you require to support this vehicle. The items are listed in alphabetical sequence by item name. If item required differs for different models of this equipment, the model is shown under the "Usable On Code" heading in the description column. These codes are identified as:

Code	Used On	Code	Used On
(Blank)	All	H18/B18	M1026/M1026A1
HVY/AVY/BVY	M1097/M1097A1/M1097A2	H20/A20/B20	M1035/M1035A1/M1035A2
H11/A11	M966/M966A1	H21	M1037
H12	M1036	H24/A24/B24	M1045/M1045A1/M1045A2
H13/A13	M998/M998A1	H25/A25/B25	M1043/M1043A1/M1043A2
H14/A14	M1038/M1038A1	H26/A26	M1044/M1044A1
H15/A15/B15	M997/M997A1/M997A2	H27/A27	M1046/M1046A1
H16/B16	M996/M996A1	H28	M1042
H17/B17/C17	M1025/M1025A1/M1025A2	MMM	M1121
		NNN	M1123

Section II. ADDITIONAL AUTHORIZATION LIST

(1) NATIONAL STOCK NUMBER	(2) DESCRIPTION CAGEC AND PART NUMBER	USABLE ON CODE	(3) U/I	(4) QTY AUTH
6665-00-935-6955	ALARM: chemical agent, M8 (81361) C5-15-8803		EA	1
2540-00-670-2459	BAG: pamphlet, cotton duck, 3 in. x 9-1/4 in. x 11-1/4 in., optional use for first-aid kit (19207) 11676920		EA	1
2510-01-276-9249	BAR: suspension, tiedown, [in tool bag behind driver's seat] (34623) 5598373		EA	2
2540-00-678-3469	BLOCK: chock (96906) MS52127-3		EA	2
3940-00-151-6769	BLOCK: tackle (19207) 11676932	H12, H14, A14, H18, B18, H26, A26, H27, A27, H28	EA	1
2510-01-050-9770	BRACKET: support, decontamination apparatus (19207) 11644841		EA	1
2540-01-276-9250	BRACKET: suspension tiedown [in tool bag behind driver's door] (34623) 5598408	H21, H28	EA	2
2590-00-473-6331	BRACKET: water/gasoline can (96906) MS53052-1		EA	2
2590-01-222-7946	CABLE, NATO SLAVE: intervehicular power cable, 12 ft long (19207) 11682379-4		AY	1
7240-00-222-3088	CAN: fuel, steel, MIL type, 5 gal. (81902) 14196P1		EA	1
7240-00-089-3827	CAN: water, military, plastic, 5 gal. (81349) MIL-C-43613		EA	1
4240-00-368-6361	CARRIER, HEADPIECE: hospital protector assembly (81361) D5-4-1002	H15, A15, B15	EA	4
		H16, B16		2

Section II. ADDITIONAL AUTHORIZATION LIST (Cont'd)

(1) NATIONAL STOCK NUMBER	(2) DESCRIPTION CAGEC AND PART NUMBER	USABLE ON CODE	(3) U/I	(4) QTY AUTH
2540-01-214-1264	CHAIN: tire, 9/32 side x 1/4 cross link (34623) 5569255		SET	2
4010-00-443-4845	CHAIN: tow, 9/32 side x 12 ft long (34623) 10944642-5		EA	1
4230-01-133-4124	DECONTAMINATION APPARATUS: M-13 (81361) E5-51-527		EA	1
4230-00-720-1618	DECONTAMINATION APPARATUS: portable, DS-2, 1-1/2 UT, ABC-M11 w/bracket (81361) D5-51-269		EA	1
6230-00-163-1856	FLASHLIGHT: 2 x 3-1/2, GFST x 8 in. (82214) 1259		EA	1
5920-01-085-0825	FUSE, ENCLOSED LINK (75915) 257020	H15, H16	EA	1
4910-00-204-3170	GAGE: tire pressure (19207) 7081758		EA	1
5120-00-198-5390	KEY, MACHINE: differential fillplug (58536) A-A-2473		EA	1
5315-00-732-1019	KEY, MACHINE: geared hub oil drainplug, straight bar key, 1/2 in. square, 2-1/2 in. long (96906) MS20066-543		EA	1
6530-00-783-7905	LITTER: folding (90142) 51L1976	H15, A15, B15 H16, B16, H20, A20, B20	EA EA	4 2
	MASK, CHEMICAL, BIOLOGICAL:		EA	1
4240-00-994-8751	M25A1 mask, small size			
4240-00-994-8750	M25A1 mask, medium size			
4240-00-994-8752	M25A1 mask, large size	H15, A15, B15 H16, B16		4 2
5340-00-158-3805	PADLOCK SET: (96906) MS35647-10		EA	1
5820-00-223-7473	RADIO SET: 9 x 14 x 16 in. (80058) AN/GRC-160		EA	1
5120-00-222-8852	SCREWDRIVER: flat tip, flared sides, plastic handle, round blade, 1/4 in. wide tip (80063) SCC539502-2		EA	1

Section II. ADDITIONAL AUTHORIZATION LIST (Cont'd)

(1) NATIONAL STOCK NUMBER	(2) DESCRIPTION CAGEC AND PART NUMBER	USABLE ON CODE	(3) U/I	(4) QTY AUTH
7240-00-177-6154	SPOUT: can, gas, flexible with filter screen, 16 in. long (19207) 11677020		EA	1
2610-01-171-4746	TIRE: pneumatic, bias, nylon breaker, 36 x 12.50 x 16.50 (81348) ZZT-381/36-12.50-16.5/C/G2A/LTTR		EA	1
2610-01-333-7632	TIRE: radial, 37 x 12.50R16.5LT (73842) 5935336		EA	1
9905-00-148-9546	TRIANGLES: folding, reflective (81348) RR-W-1817		SET	1
1005-00-322-9716	TRIPOD MOUNT: w/cover, M3, mach. gun (19204) 8403398	H17, B17, C17, H18, B18	EA	1
5340-01-277-2460	TURNBUCKLE ASSY: suspension tiedown (34623) 5598406	H21, H28	EA	2
2530-01-160-9569	WHEEL AND RUNFLAT, BIAS: (41885) 89305		EA	1
N/A	WHEEL AND RUNFLAT, RADIAL: (19207) 12342641		EA	1
5120-01-279-4788	WRENCH: open end, 1-1/8 x 18 in. long (34623) 5598407	H21, H28	EA	1

APPENDIX D
EXPENDABLE/DURABLE SUPPLIES AND MATERIALS UST

SECTION I. INTRODUCTION

D-1. SCOPE

This appendix lists expendable/durable supplies and materials you will need to operate and maintain M998 series vehicles. These items are authorized to you by CTA 50-970, Expendable Items (except Medical, Class V, Repair Parts, and Heraldic Items.)

D-2. EXPLANATION OF COLUMNS

a. Column (1) - Item Number. This number is assigned to each entry in the listing.

b. Column (2) - Level. This column identifies the lowest level of maintenance that requires the listed item:

C - Operator/Crew

c. Column (3) - National Stock Number. This is the National stock number assigned to the item; use it to request or requisition the item.

d. Column (4) - Description. Indicates the Federal item name and, if required, a description to identify the item. The last line for each item listing indicates the Commercial and Government Entity Code (CAGEC) in parenthesis followed by the part number.

e. Column (5) - Unit of Measure (U/M). Indicates the measure used in performing the actual maintenance function. This measure is expressed by an alphabetical abbreviation (QT, GAL.). If the unit of measure differs from the unit of issue, requisition the lowest unit of issue that will satisfy your requirements.

Section II. EXPENDABLE/DURABLE SUPPLIES AND MATERIALS LIST

(1) ITEM NUMBER	(2) LEVEL	(3) NATIONAL STOCK NUMBER	(4) DESCRIPTION	(5) U/M
1	C		ADHESIVE: silicone rubber (81349) MIL-A-46106	
		8040-01-010-8758	1 Kit	KT
1.1	C	6810-01-205-7039	ALCOHOL, ISOPROPYL (61757) MDC00395-1243-16	EA
1.2	C		ANTIFREEZE: arctic-type (81349) MIL-A-11755	
		6850-00-174-1806	55 Gallon Drum	GAL.
2	C		ANTIFREEZE: ethylene glycol, inhibited, heavy duty, single package (81349) MIL-A-46153	
		6850-00-181-7929	1 Gallon Container	GAL.
		6850-00-181-7933	5 Gallon Container	GAL.
		6850-00-181-7940	55 Gallon Drum	GAL.
3	C		CLEANING COMPOUND: windshield washer (81348) O-C-1901	
		6850-00-926-2275	1 Pint	PT
4	C		DETERGENT: general purpose (74188) ORVUS WA PASTE	
		7930-01-107-6997	Container	N/A
5	C		DETERGENT: general purpose, liquid (81349) MIL-D-16791	
		7930-00-282-9699	1 Gallon Container	GAL.
5.1	C		DETERGENT: laundry (81348) P-D-245	
		7830-00-985-6904	20 Oz. Box	OZ

Section II. EXPENDABLE/DURABLE SUPPLIES AND MATERIALS LIST (Cont'd)

(1) ITEM NUMBER	(2) LEVEL	(3) NATIONAL STOCK NUMBER	(4) DESCRIPTION	(5) U/M
6	C		DRYCLEANING SOLVENT: (81348) SD-3	
		6850-00-110-4498	1 Pint Can	PT
		6850-00-274-5421	5 Gallon Drum	GAL.
		6850-00-285-8011	55 Gallon Drum	GAL.
		6850-00-637-6135	Bulk	GAL.
7	C		FUEL OIL: diesel, regular, DF-2 (81348) VV-F-800	
		9140-00-286-5296	55 Gallon Drum	GAL.
		9140-00-286-5294	Bulk	GAL.
8	C		FUEL OIL: diesel, winter, DF-1 (81348) VV-F-800	
		9140-00-286-5288	55 Gallon Drum	GAL.
		9140-00-286-5286	Bulk	GAL.
9	C		FUEL OIL: diesel, arctic, DF-A (81348) VV-F-800	
		9140-00-286-5284	55 Gallon Drum	GAL.
		9140-00-286-5283	Bulk	GAL.
10	C		GREASE: automotive and artillery (81349) MIL-G-10924	
		9150-00-935-1017	14 Ounce Cartridge	OZ
		9150-00-190-0904	1-3/4 Pound Can	LB
		9150-00-190-0905	6-1/2 Pound Can	LB
10.1	C		GREASE: molybdenum (30719) LS2267	
		9150-01-015-1542	14.5 Ounce Cartridge	OZ
10.2	C	9150-00-530-6814	GREASE, wire rope: exposed gear (81349) MIL-G-18458	CN
11	C		HAND CLEANER (19410) PAXSOLV16	
		8520-00-082-2146	Container, 1 Pound	LB

Section II. EXPENDABLE/DURABLE SUPPLIES AND MATERIALS LIST (Cont'd)

(1) ITEM NUMBER	(2) LEVEL	(3) NATIONAL STOCK NUMBER	(4) DESCRIPTION	(5) U/M
12	C		HYDRAULIC FLUID: transmission (24617) Dexron® II	
		9150-00-698-2382	1 Quart Can	QT
		9150-00-657-4959	5 Gallon Can	GAL.
13	C		HYDRAULIC FLUID: transmission (24617) Dexron® III	
		9150-01-353-4799	1 Quart (plastic) Can	QT
		9150-01-114-9968	55 Gallon Drum	GAL.
14			Deleted	
15			Deleted	
16			Deleted	
17	C		LUBRICATING OIL: gear, multipurpose, GO 75 (81349) MIL-L 2105	
		9150-01-035-5390	1 Quart Can	QT
		9150-01-035-5391	5 Gallon Drum	GAL.
18	C		LUBRICATING OIL: gear, multipurpose, GO 80/90 (81349) MIL-L-2105	
		9150-01-035-5392	1 Quart Can	QT
		9150-01-035-5393	5 Gallon Drum	GAL.
19	C		LUBRICATING OIL: general purpose, preservative, PL-S (81348) VV-L-800	
		9150-00-231-6689	1 Quart Can	QT

Section II. EXPENDABLE/DURABLE SUPPLIES AND MATERIALS LIST (Cont'd)

(1) ITEM NUMBER	(2) LEVEL	(3) NATIONAL STOCK NUMBER	(4) DESCRIPTION	(5) U/M
20	C		LUBRICATING OIL: internal combustion engine, arctic, OEA (81349) MIL-L-46167	
		9150-00-402-4478	1 Quart Can	QT
		9150-00-402-2372	5 Gallon Drum	GAL.
		9150-00-491-7197	55 Gallon Drum	GAL.
21	C		LUBRICATING OIL: internal combustion engine, tactical service, OE/HDO 10 (81349) MIL-L-2104	
		9150-00-189-6727	1 Quart Can	QT
		9150-00-186-6668	5 Gallon Drum	GAL.
		9150-00-191-2772	55 Gallon Drum	GAL.
22	C		LUBRICATING OIL: internal combustion engine, tactical service, OE/HDO 30 (81349) MIL-L-2104	
		9150-00-186-6681	1 Quart Can	QT
		9150-00-188-9858	5 Gallon Drum	GAL.
		9150-00-189-6729	55 Gallon Drum	GAL.
23	C		LUBRICATING OIL: internal combustion engine, tactical service, OE/HDO 15/40 (81349) MIL-L-2104	
		9150-01-152-4117	1 Quart Can	QT
		9150-01-152-4118	5 Gallon Drum	GAL.
		9150-01-152-4119	55 Gallon Drum	GAL.

Section II. EXPENDABLE/DURABLE SUPPLIES AND MATERIALS LIST (Cont'd)

(1) ITEM NUMBER	(2) LEVEL	(3) NATIONAL STOCK NUMBER	(4) DESCRIPTION	(5) U/M
24	C	7930-00-935-3794	POLISH: plastic, liquid, removable (80244) P-P-560, Type I	
		7930-00-634-5340	1 Pint Container	PT
25	C		RAG: wiping, cotton and cotton-synthetic (58536) A-A-531	
		7920-00-205-1711	50 Pound Bale	LB
26	C		CREAM CLEANER: plastic, liquid	
		8520-00-262-7177	1 Pint Container	PT
27	C		DISTILLED WATER:	
		6810-00-682-6867	1 Gallon Container	GAL.
		6810-00-356-4936	5 Gallon Container	GAL.
28	C		LUBRICANT: solid film (8F024) Perm-slik RAC	
		9150-01-380-4470	11 ounce can, aerosol (P0329)	OZ
29	C		LUBRICANT: interlock (96980) Zipperease	
		9150-00-999-7548	1 Box	OZ

APPENDIX E
STOWAGE AND SIGN GUIDE

E-1. SCOPE

This appendix shows the location for stowage of equipment and material required to be carried on M998, A1, A2 series, and M1123 vehicles.

E-2. GENERAL

The equipment stowage locator is designed to help inventory items required for safe and efficient operation. This equipment locator is representative of BII and applicable AAL stowage on M998, A1, A2 series, and M1123 vehicles. Refer to appendix F for specific deviations from this equipment locator for other vehicles and to para. 2-2 for additional information concerning stowage of equipment.

E-3. STOWAGE LOCATIONS

Applicable models: All

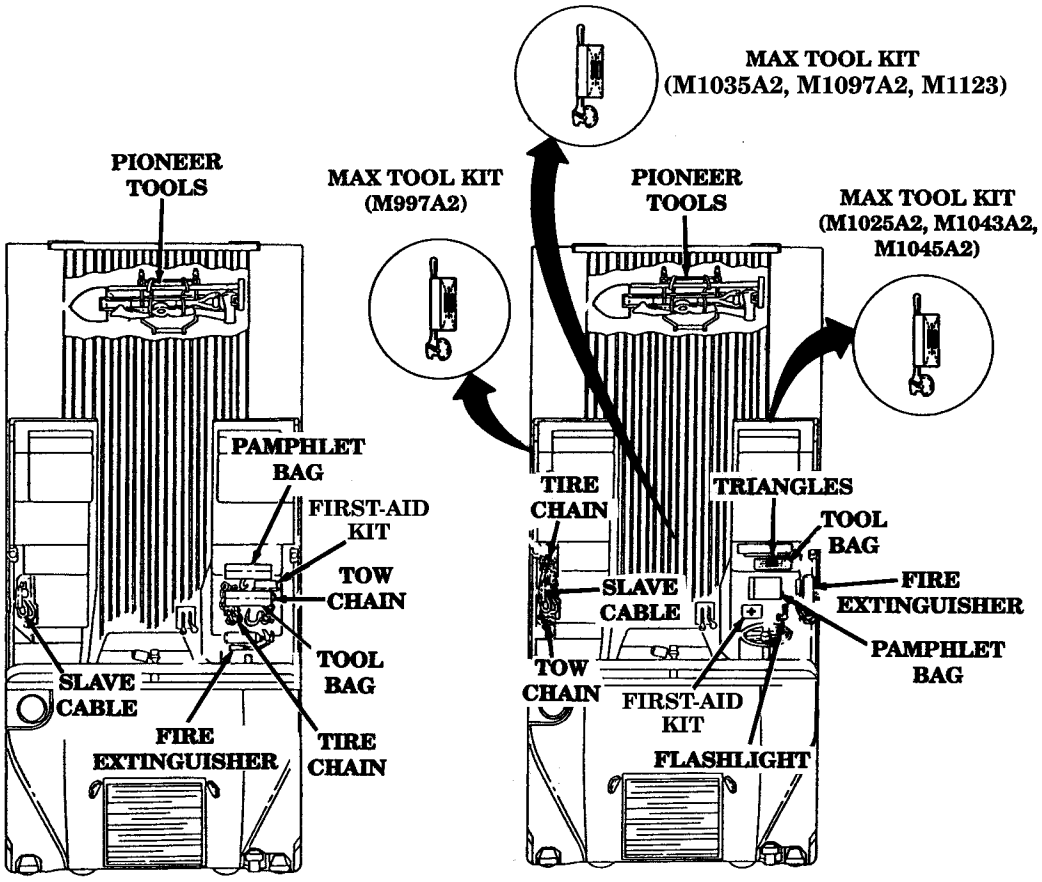

(All except M1123, A1, and A2 vehicles)

(M1123, A1 and A2 vehicles)

E-4. SIGN GUIDE

LOCATION OF CREW AREA AND EXTERIOR DECALS AND DATA PLATES		
KEY	ITEM	VEHICLE APPLICATION
1	Decal, caution, windshield cleaning	M996, M996A1, M997, M997A1, M997A2, M1025, M1025A1, M1025A2, M1026, M1026A1, M1036, M1043, M1043A1, M1043A2, M1044, M1044A1, M1045, M1045A1, M1045A2, M1046, M1046A1
2	Plate, identification, ignition	All
3	Decal, neutral start, warning	All
4	Plate, instruction, steering wheel lock	All
5	Decal, speedometer	All
6	Decal, warning, hand throttle	All
7	Plate, identification, heater, defroster, temperature, fan	All
8	Decal, identification, M16 rifle, front	M966, M966A1, M1025, M1025A1, M1025A2, M1026, M1026A1, M1036, M1043, M1043A1, M1043A2, M1044, M1044A1, M1045, M1045A1, M1045A2, M1046, M1046A1, M1121
9	Plate, instruction, heater air control	All
10	Decal, service and data manuals	All
11	Decal, procedures, tiedown	All
12	Plate, instruction, seatbelt retractor (front)	All
13	Plate, instruction, operating	All
14	Decal, identification, M16 rifle, rear	M1043, M1043A1, M1043A2, M1044, M1044A1
15	Plate, instruction, seatbelt retractor (rear)	All except M996, M996A1, M997, M997A1, M997A2, M1035, M1035A1, M1035A2, M1037, M1042
16	Plate, instruction, driver's seat adjustment	All
17	Plate, identification, vehicle	All
18	Decal, identification, fire extinguisher	All
19	Plate, information, deep water fording	Vehicles so equipped
20	Plate, sling and tiedown/weights and dimensions data	All
21	Plate, instruction, battery cable connections	All
22	Decal, 24V	All
23	Plate, identification, slave receptacle	All

E-4. SIGN GUIDE (Cont'd)

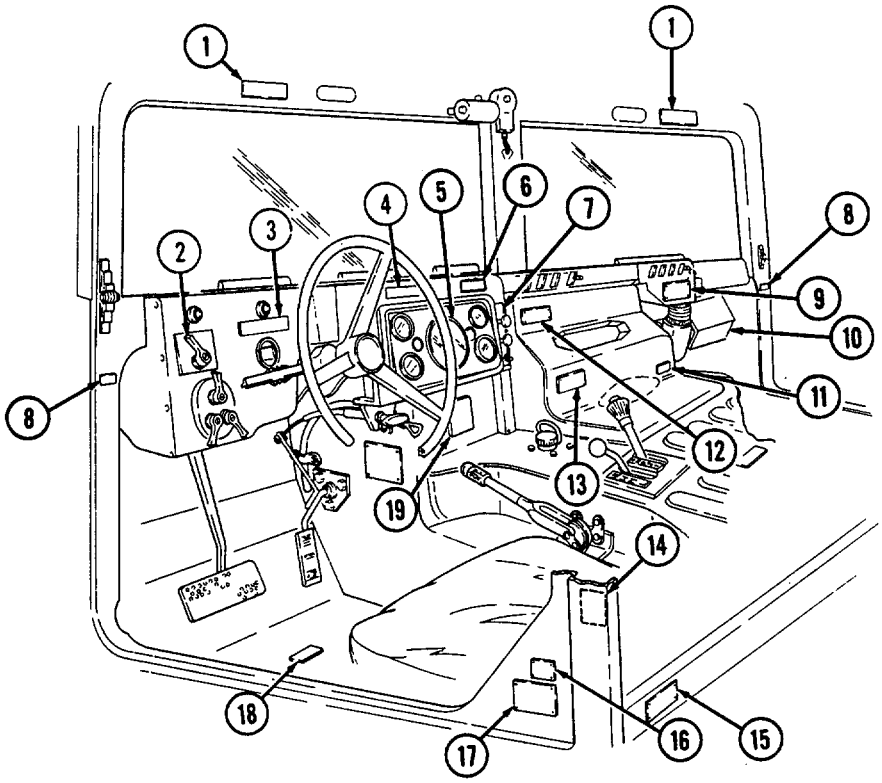

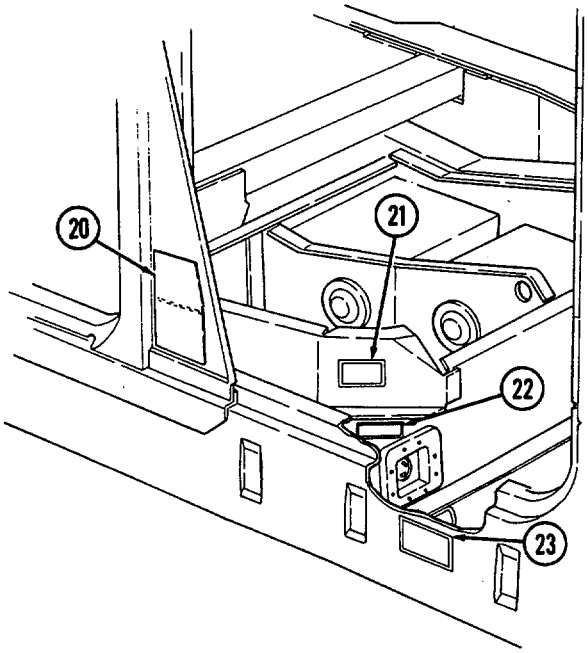

E-4. SIGN GUIDE (Cont'd)

LOCATION OF CREW AREA AND EXTERIOR DECALS AND DATA PLATES		
KEY	ITEM	VEHICLE APPLICATION
1	Decal, warning, fan blade	All
2	Decal, no step	All
3	Decal, sling	All
4	Decal, no step	All
5	Decal, identification, USMC registration number	USMC vehicles only
6	Decal, warning, surge tank cap	All
7	Decal, no step	All
8	Decal, instruction, sling guide	All except M996, M996A1, M997, M997A1, M1097A2, M1037, M1042
9	Decal, identification, sling and tiedown	All except M996, M996A1, M997, M997A1, M997A2, M1037, M1042
10	Decal, identification, star	Army only, except for CONUS vehicles and M996, M996A1, M997, M997A1, M997A2, M1035, M1035A1, M1035A2
11	Decal, tire pressure, rear	All
12	Decal, identification, vehicle number	Army vehicles only
13	Decal, tire pressure, front	All
14	Decal, identification, tiedown	All

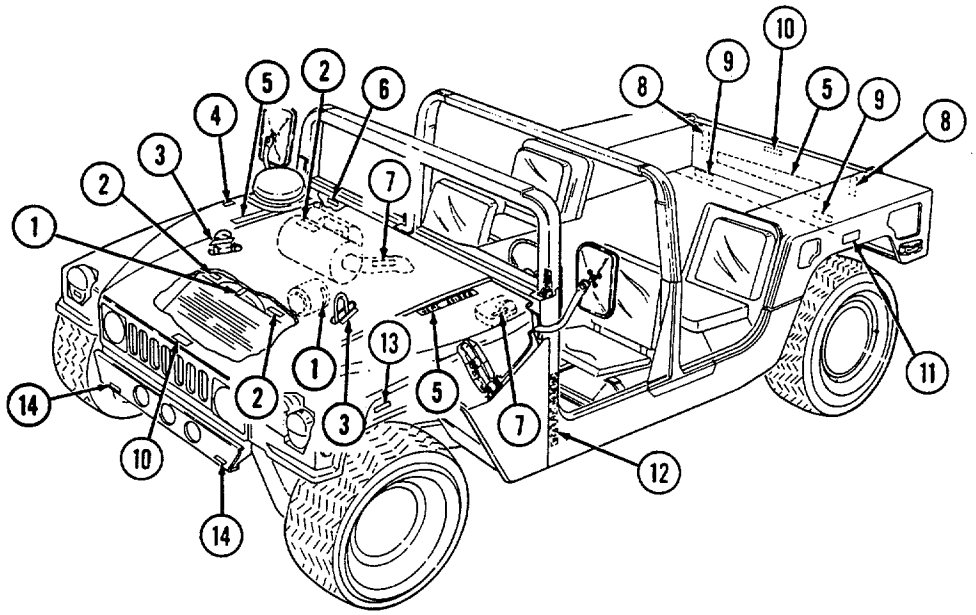

E-4. SIGN GUIDE (Cont'd)

LOCATION OF CREW AREA AND EXTERIOR DECALS AND DATA PLATES		
KEY	ITEM	VEHICLE APPLICATION
1	Plate, NBC fuse control box	M996, M996A1, M997, M997A1, M997A2
2	Plate, NBC master control switch	M996, M996A1, M997, M997A1, M997A2
3	Decal, sling	M996, M996A1, M997, M997A1, M997A2, M1037, M1042
4	Decal, tiedown	M996, M996A1, M997, M997A1, M997A2, M1037, M1042
5	Decal, 24V	All

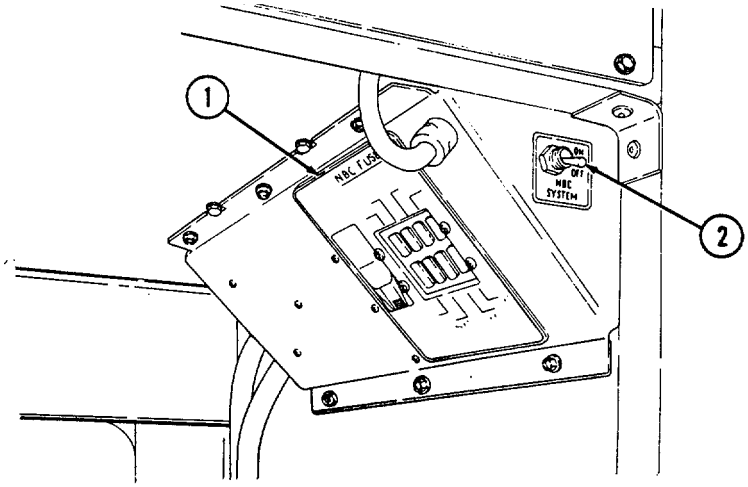

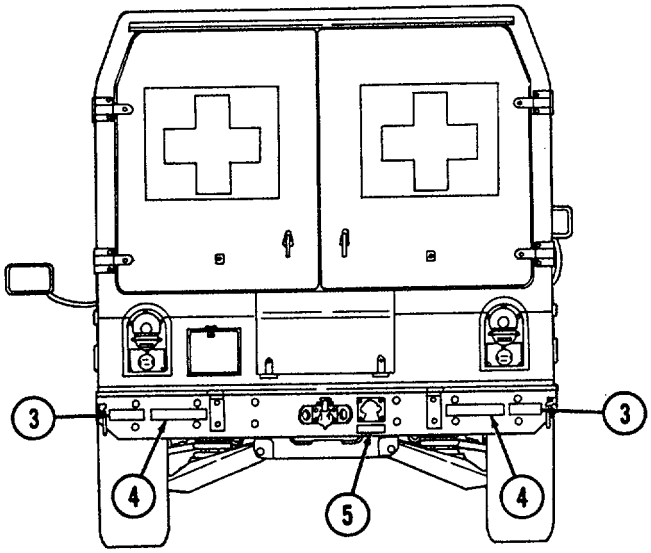

E-4. SIGN GUIDE (Cont'd)

LOCATION OF CREW AREA AND EXTERIOR DECALS AND DATA PLATES		
KEY	ITEM	VEHICLE APPLICATION
1	Decal, warning, body heater	M996, M996A1, M997, M997A1, M997A2
2	Plate, control system heating/ventilation	M996, M996A1
3	Plate, heater/air-conditioner/vent operation	M997, M997A1, M997A2
4	Plate, 24-volt outlet	M996, M996A1, M997, M997A1, M997A2
5	Plate, harness circuit connections control box	M996, M996A1, M997, M997A1, M997A2
6	Plate, lights, 24-volt DC, fuse control	M996, M996A1, M997, M997A1, M997A2

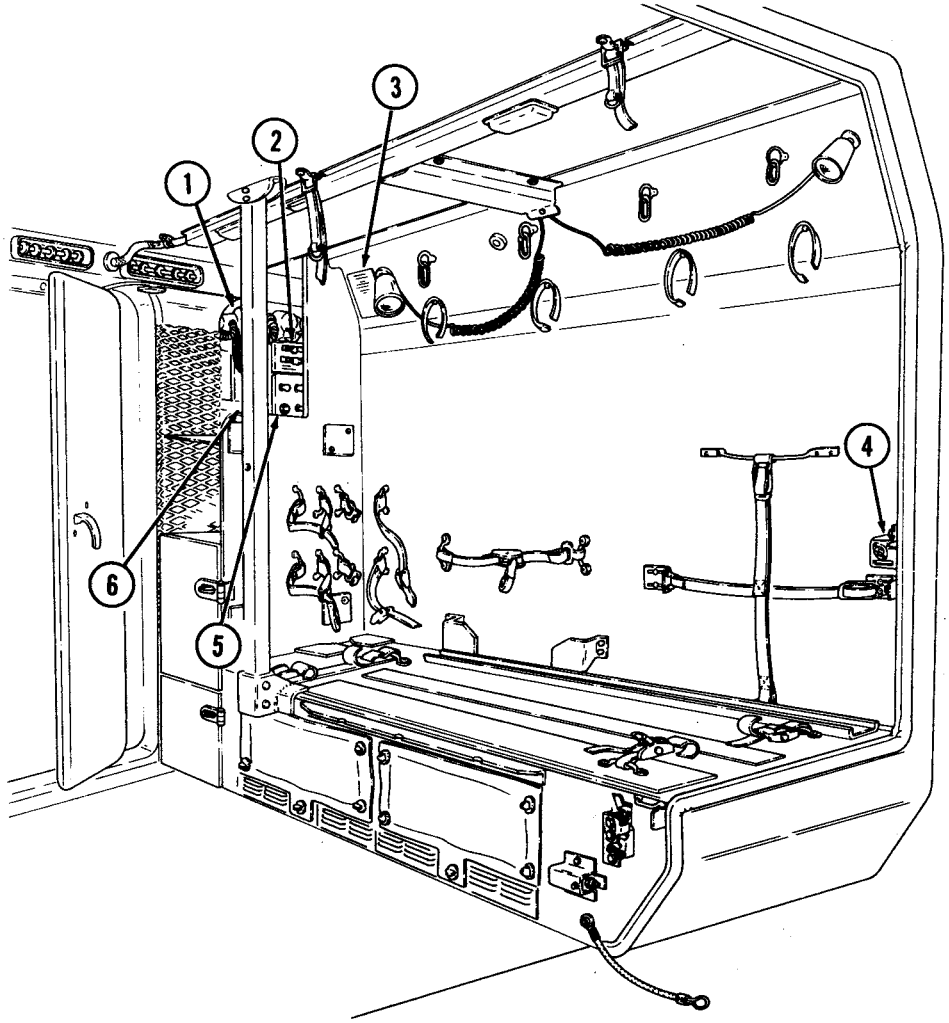
1
2
3
4
5
6

TOW CARRIER (M966, M966A1, M1036, M1045, M1045A1, M1045A2, M1046, M1046A1, AND M1121) STOWAGE LOCATION DECALS	
KEY	ITEM
1	Deleted
2	Decal, Missile Guidance Set (MGS)
3	Decal, traversing unit
4	Decal, radiac meter
5	Decal, night vision goggles
6	Decal, night sight
7	Decal, night sight coolant
8	Decal, boresight collimator
9	Decal, night sight batteries
10	Decal, combat rations
11	Decal, daysight
12	Decal, fuel can
13	Decal, tripod
14	Decal, telephone
15	Decal, cable reel
16	Decal, ammunition
17	Decal, MGS battery
18	Decal, water can
19	Decal, NBC overgarments
20	Decal, NBC chemical mask
21	Decal, no hold warning spring cover
22	Decal, nose end
23	Decal, launch tube

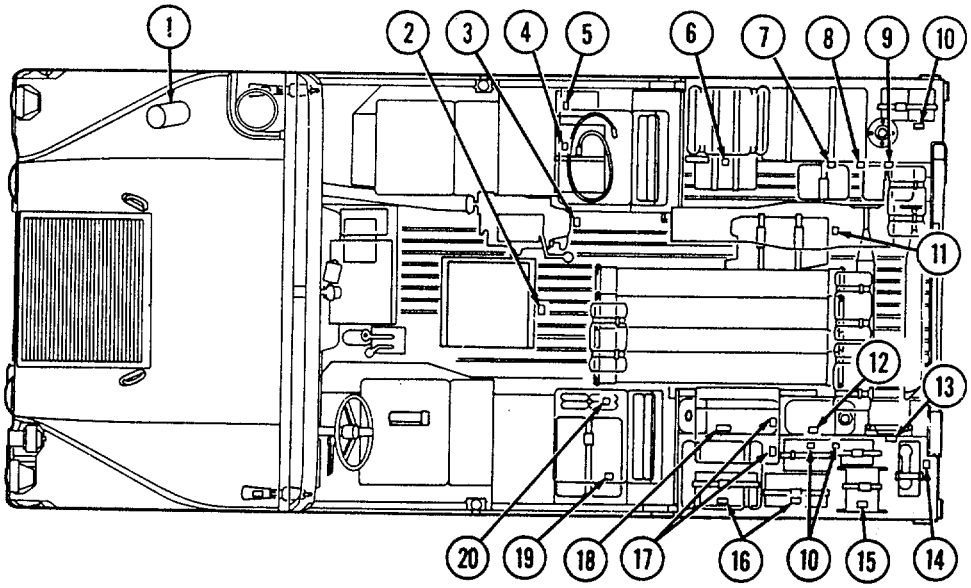
1
2
3
4
5
6
7
8
9
10
11
12
13
14
15
16
10
17
18
19
20

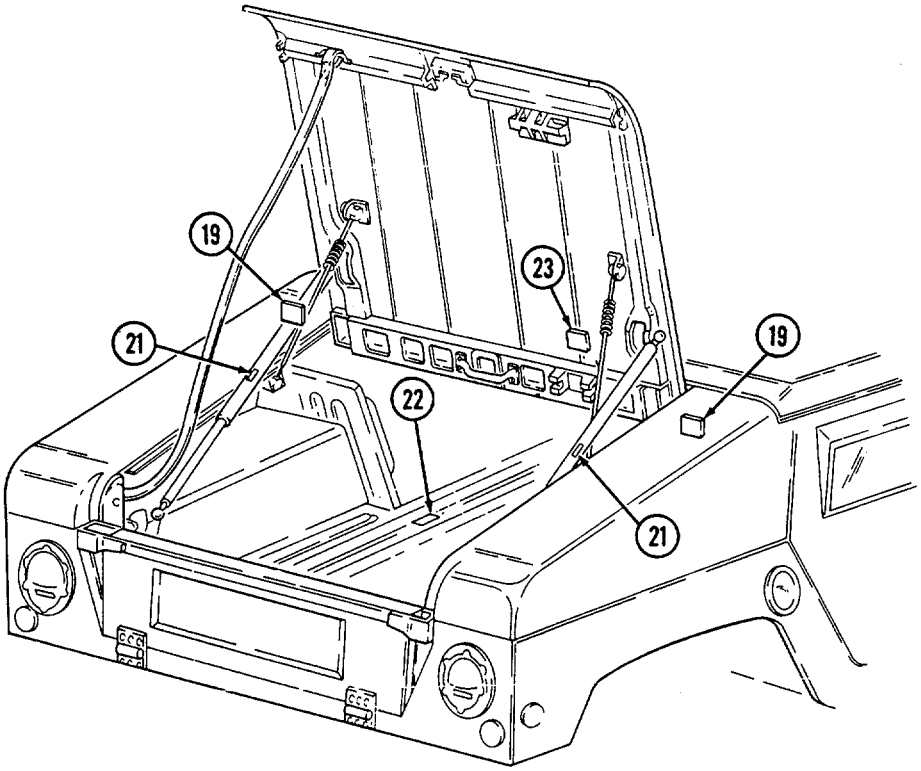
19
23
21
19
22
21

E-4. SIGN GUIDE (Cont'd)

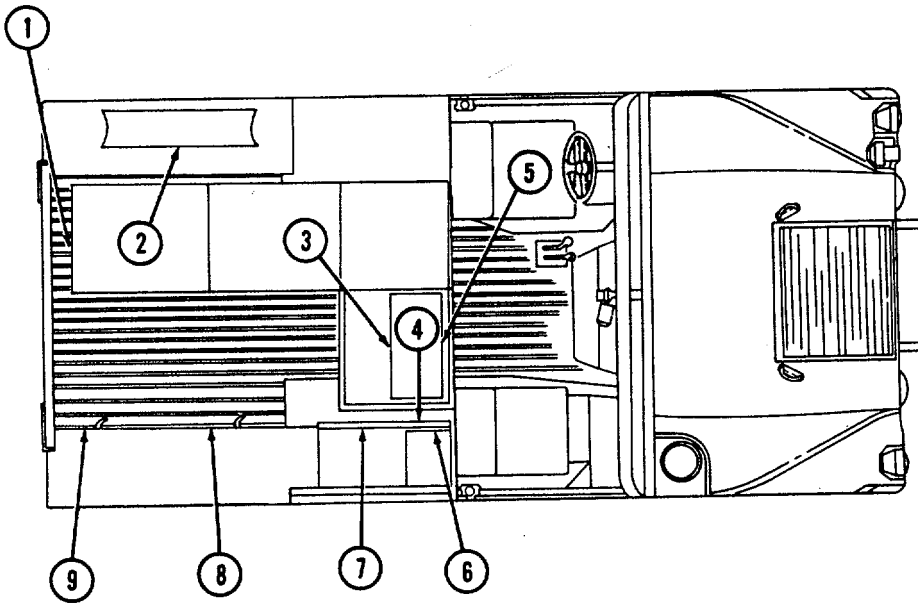

CARGO/TROOP CARRIER (M998, M998A1, M1038, AND M1038A1) WITH 81MM MORTAR KIT INSTALLED	
KEY	ITEM
1	Decal, mortar base plate
2	Decal, bipod
3	Decal, 4 round ready rack
4	Decal, M16 chest
5	Decal, aiming post
6	Decal, M14 chest
7	Decal, tool chest
8	Decal, mortar launch tube
9	Decal, cleaning staff

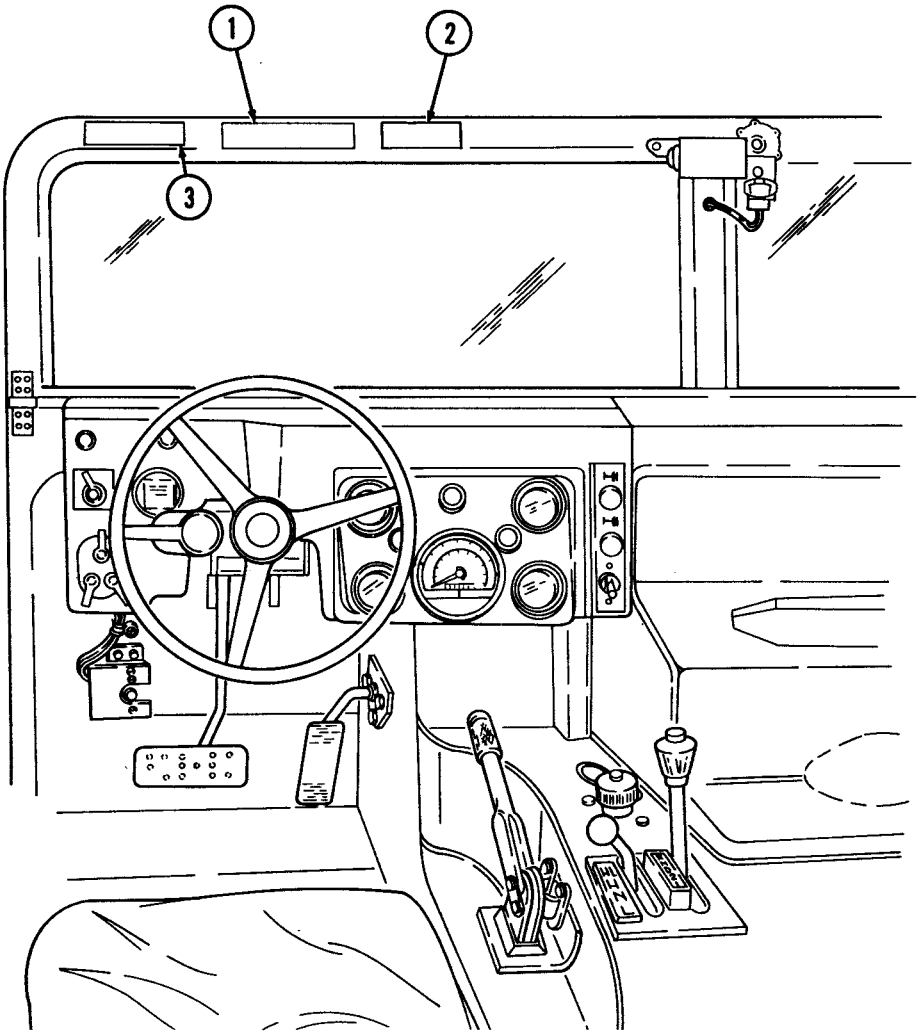

LOCATION OF TRANSPORTING AMMUNITION DECAL AND HEARING PROTECTION DECAL	
KEY	ITEM
1	Decal, warning, transporting ammunition (M1097, M1097A1, M1097A2, and M1123 with Howitzer Prime Mover Kit installed)
2	Decal, caution, hearing protection (M1097 only)
3	Decal, caution, hearing protection (All A1, A2, and M1123 vehicles)

E-4. SIGN GUIDE (Cont'd)

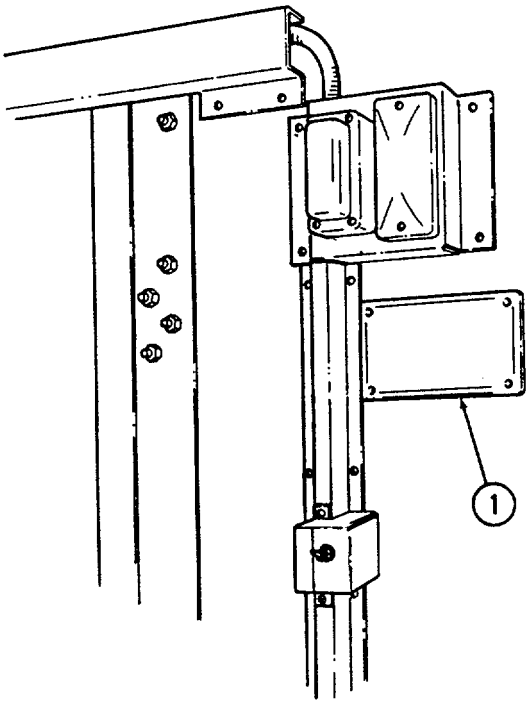

CARGO/TROOP CARRIER (M998, M998A1, M1038, AND M1038A1) WITH WINTERIZATION KIT INSTALLED	
KEY	ITEM
1	Plate, instruction, heater operating instructions

APPENDIX F
ON-VEHICLE EQUIPMENT LOADING PLANS

F-1. SCOPE

This appendix shows the on-vehicle equipment loading plan for TOW carrier (M966, M966A1, M1036, M1045, M1045A1, M1045A2, M1046, M1046A1, and M1121), armament carriers w/supplemental armor (M1043, M1043A1, M1043A2, M1044, and M1044A1), and heavy variants (M1097, M1097A1, M1097A2, and M1123).

F-2. TOW CARRIER LOAD PLAN

This is a standard load plan for the TOW carrier (M966, M966A1, M1036, M1045, M1045A1, M1045A2, M1046, M1046A1, and M1121). It is designed to supplement the stowage and sign guide contained in Appendix E. It includes selected items of personnel and unit equipment issued to most units within the Army or Marine Corps equipped with this vehicle. Vehicles and equipment not shown in either this document or Appendix E may be loaded in accordance with local command policy. Fuel cans cannot be carried in an enclosed vehicle.

Proponent: Commandant
US Army Infantry School
Fort Benning, GA 31905

TOW CARRIER STOWAGE PLAN

LOAD PLAN	
NO.	ITEM
1	Missile Guidance Set (MGS)
2	M16A1/M203 Rifle
3	Flashlight
4	Binoculars
5	AN/GRC-160 Radio
6	TSEC/KY-57
7	Gasoline Cook Stove (strapped to airlift bracket)
7.1	Jack, Scissors (A2 only)
8	M16A1/M203 Rifle
9	Night Sight Vehicle Power Conditioner
10	Adjustable Gunner's Platform
11	Traversing Unit
12	Radiac Meter
13	Night Vision Goggles (2)
14	NBC Footwear
15	Battery Pack, Night Sight
16	NBC Overgarments (strapped to body)
17	Boresight Collimator
18	Night Vision Sight Case
19	Coolant Cartridge Cases
20	Radio Antenna (on cargo shell)
21	Combat Rations
22	Optical Sight W/Cover
23	Night Sight Battery (under tanker roll)
24	Camouflage Screen and Support System
25	Tanker Rolls
26	Tripod
27	Telephone
28	DR8 Cable Reel
29	Combat Rations
30	M13 Decon Kit
31	Ammunition (M16A1)
32	Water Can
33	NBC Overgarments (strapped to body)
34	MGS Battery Assemblies (2)
35	NBC Footwear (2)
36	Missiles (6)
37	Tanker Roll (strapped to roof)
38	NBC Hood Masks (4)
39	Launch Tube (strapped to door)

INTERNAL TOP VIEW

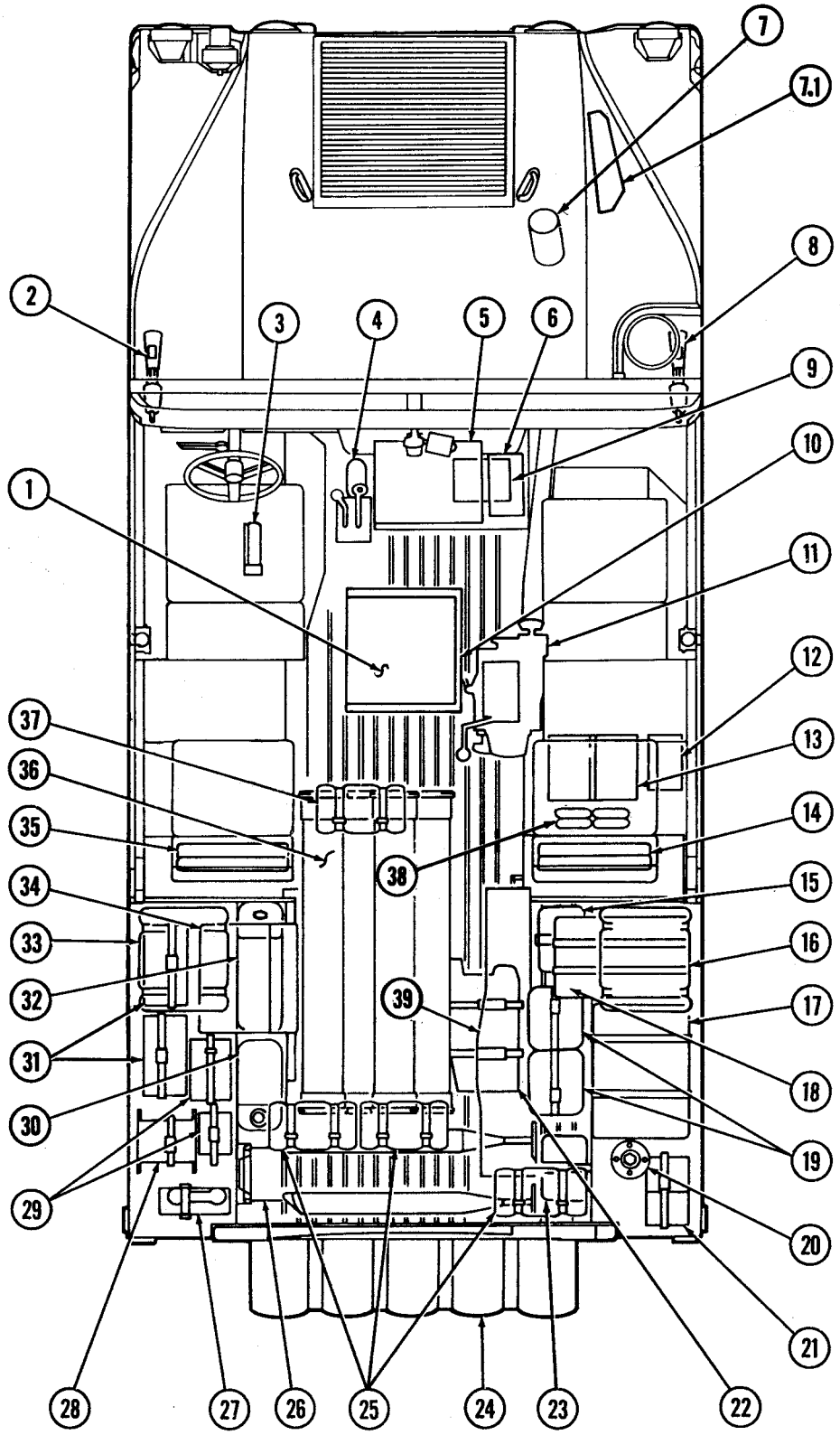

TOW 2 CARRIER STOWAGE PLAN

LOAD PLAN	
NO.	ITEM
1	Missile Guidance Set (MGS)
2	M16A1/M203 Rifle
3	Flashlight
4	Binoculars
5	AN/GRC-160 Radio
6	TSEC/KY-57
7	Gasoline Cook Stove (strapped to airlift bracket)
7.1	Jack, Scissors (A2 only)
8	M16A1/M203 Rifle
9	Night Sight Vehicle Power Conditioner
10	Adjustable Gunner's Platform
11	Traversing Unit
12	Night Vision Goggles (2)
13	Radiac Meter
14	MGS VPC Cable Extension
15	NBC Footwear (2)
16	Night Vision Sight
17	NBC Overgarments (strapped to body)
18	Optical Sight W/Cover
19	Boresight Collimator
20	Combat Rations
21	Radio Antenna (on cargo shell)
22	Night Sight Battery Power Conditioner
23	Night Sight Battery (under tanker roll)
24	Camouflage Screen and Support System
25	Tanker Rolls
26	Tripod
27	Telephone
28	DR8 Cable Reel
29	M13 Decon Kit
30	Combat Rations
31	MGS Battery Assemblies (2)
32	Ammunition (M16A1)
33	NBC Overgarments (strapped to body)
34	Water Can
35	Missiles (6)
36	NBC Overgarments (2)
37	Tanker Roll (strapped to roof)
38	NBC Hood Masks (4)
39	Launch Tube (strapped to door)

INTERNAL TOP VIEW

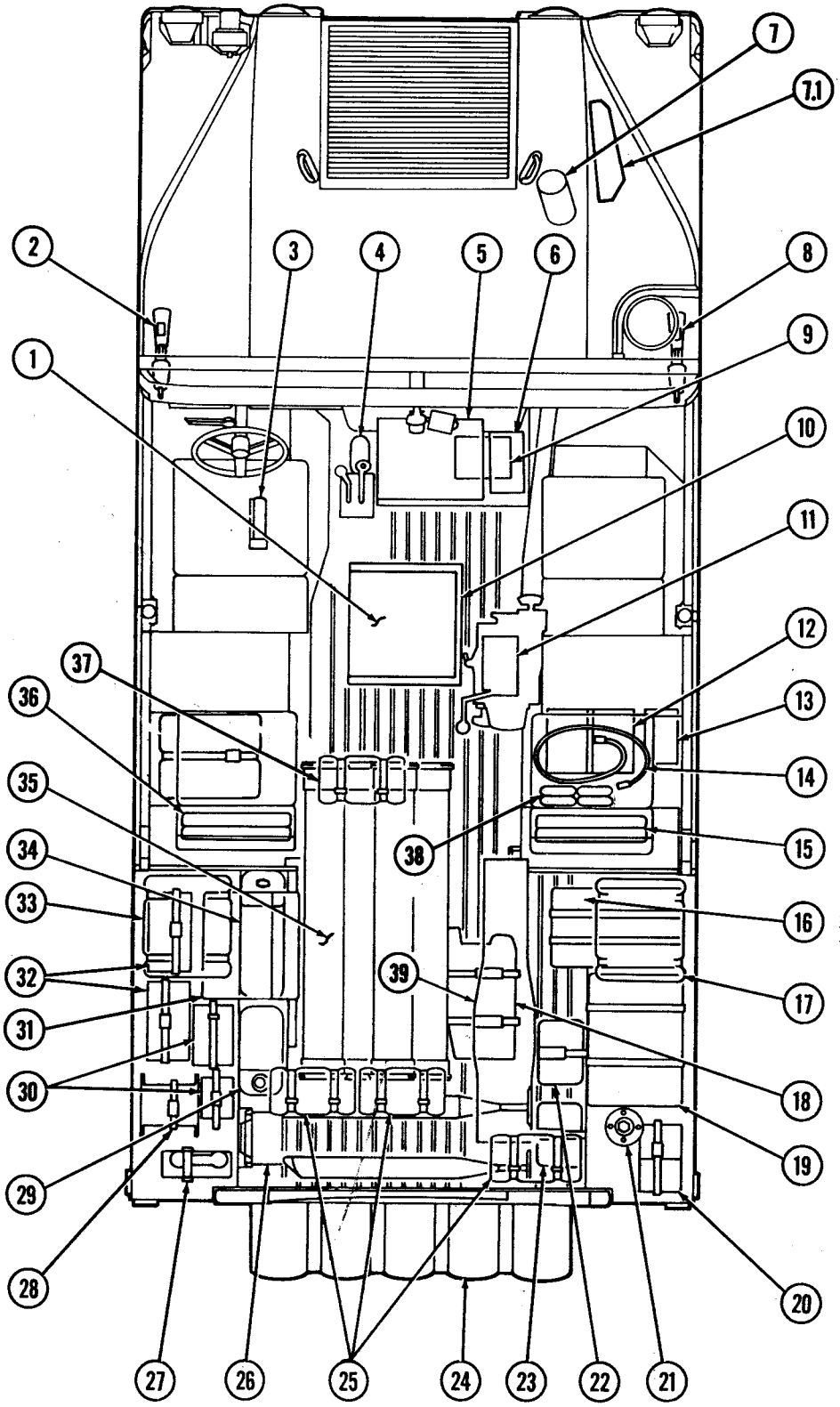

F-3. ARMAMENT CARRIERS W/SUPPLEMENTAL ARMOR LOAD PLAN

This is a standard load plan for the armament carriers w/supplemental armor (M1043, M1043A1, M1044, and M1044A1). It is designed to supplement the stowage and sign guide contained in Appendix E. It includes selected items of personnel and unit equipment issued to most units within the Marine Corps equipped with this vehicle. Equipment not shown in either this document or Appendix E may be loaded in accordance with local command policy.

ARMAMENT CARRIER W/SUPPLEMENTAL ARMOR STOWAGE PLAN

LOAD PLAN	
NO.	**ITEM**
1	M16A1/M203 Rifle
2	Fire Extinguisher
3	AN/GRC-160 Radio
4	M16A1/M203 Rifle
5	MK64 MOD 4 Mount
6	Pintle Adapter
7	M16A1 Rifle
8	Tool Box
9	Combat Rations (under seat)
10	Ammunition (caliber .50)
11	Night Vision Sight Case
12	Radio Antenna (on cargo shell)
13	MK19 40 mm Grenade Launcher
14	M3 Tripod
15	M2 Caliber .50 Machine Gun
16	Camouflage Screen and Support System
17	Ammunition (MK19)
18	Spare Barrel (M2 caliber .50) and Cleaning Kit
19	Water Can
20	Ammunition (caliber .50)
21	Ammunition (MK19)
22	Ammo Can Mounting Tray (40 mm)
23	Ammunition (caliber .50)
24	Combat Rations (under seat)
25	M16A1 Rifle
26	Adjustable Gunner's Platform

INTERNAL TOP VIEW

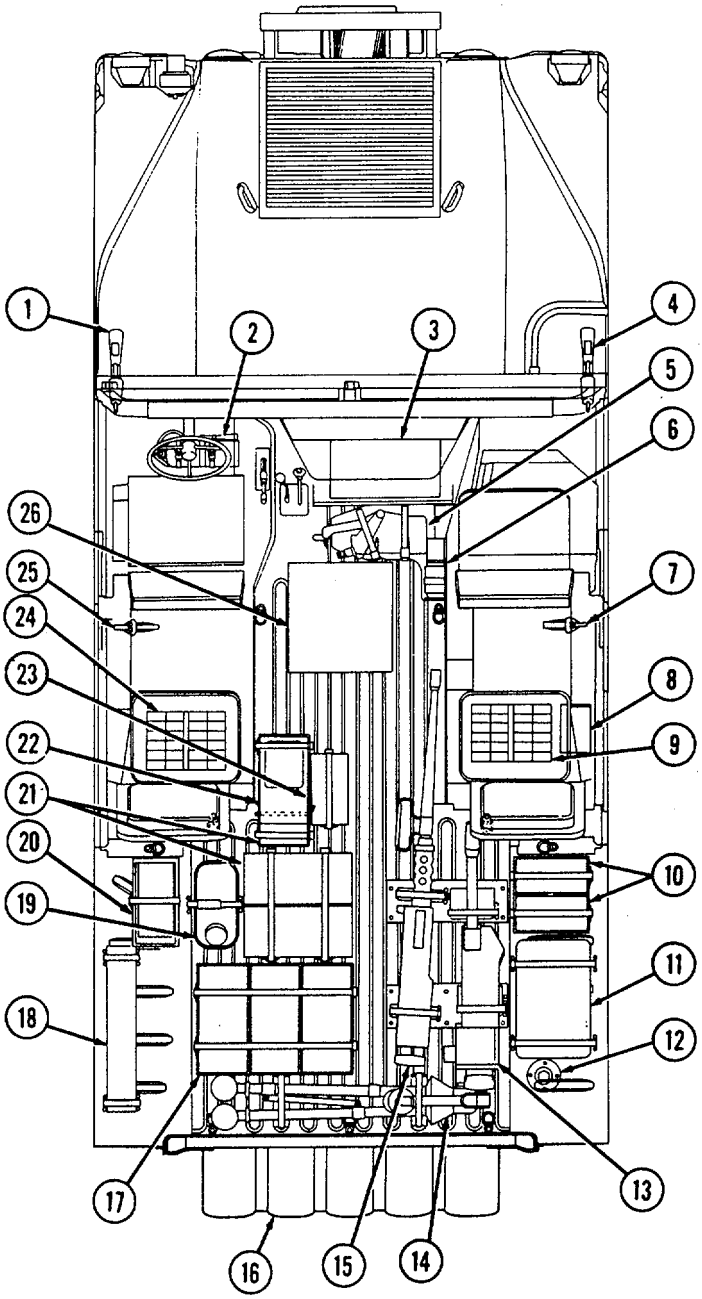

F-4. ARMAMENT CARRIERS W/SUPPLEMENTAL ARMOR LOAD PLAN A2 VEHICLES

This is a standard load plan for the armament carriers w/basic armor (M1025A2), or w/supplemental armor (M1043A2). It is designed to supplement the stowage and sign guide contained in Appendix E. It includes selected items of personnel and unit equipment issued to most units within the Army and Marine Corps equipped with this vehicle. Equipment not shown in this document may be loaded in accordance with local command policy.

ARMAMENT CARRIER W/SUPPLEMENTAL ARMOR STOWAGE PLAN

LOAD PLAN	
NO.	ITEM
1	M16A1/M203 Rifle
2	Rifle M16A1
3	Tool Box
4	Combat Rations (under seat)
5	Ammunition Tray (caliber 5.56 mm)
6	Radio Antenna (on cargo shell)
7	Camouflage Screen and Support System
8	Water Can Tray
9	Water Can Tray (2)
10	Ammunition Tray (caliber 5.56 mm)
11	40 mm/50 cal/Ammunition Tray
12	Combat Rations (under seat)
13	Pedestal
14	Adjustable Gunner's Platform
15	Fire Extinguisher
16	M16A1/M203 Rifle
17	AN/GRC-160 Radio
18	Jack, Scissors

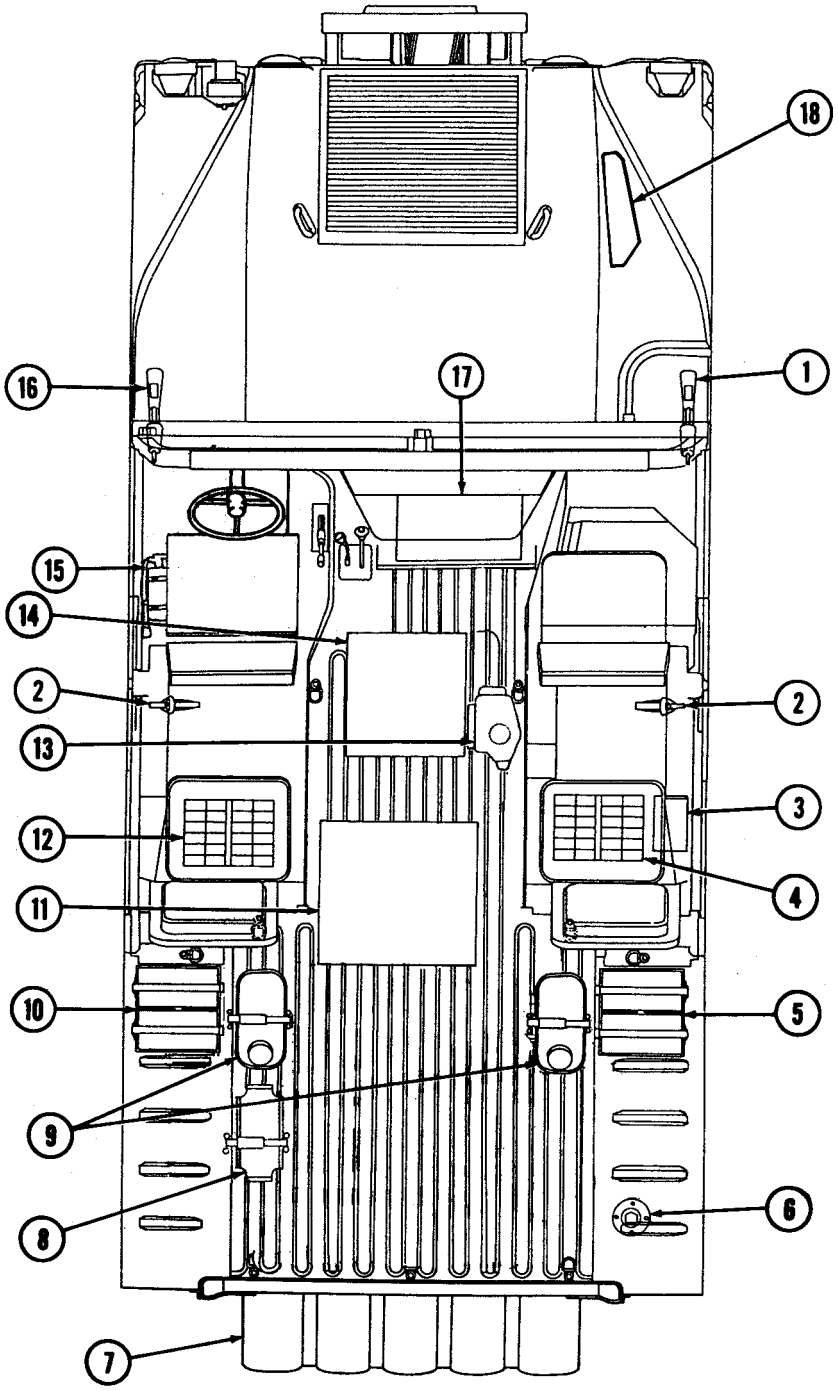
18
16
17
1
15
14
2
2
13
3
12
4
11
10
5
9
6
8
7

F-5. ARMAMENT CARRIERS LOAD PLAN (USAF) (MK19/M60 MACHINE GUN)

This is a standard load plan for the USAF armament carriers (M1026 and M1026A1). It is designed to supplement the stowage and sign guide contained in Appendix E. It includes selected items of personnel and unit equipment issued to units within the Air Force equipped with this vehicle. Equipment not shown in this document may be loaded in accordance with local command policy. This load plan is for either the MK19 or M60 equipped armament carrier.

ARMAMENT CARRIER STOWAGE PLAN (USAF) (MK19/M60 MACHINE GUN)

LOAD PLAN	
NO.	ITEM
1	M16 Rifle
2	Fire Extinguisher
3	Tactical Communications Platform
3.1	Jack, Scissors (A2 only)
4	M16 Rifle
5	MK64 MOD 4 Mount
6	Pintle Adapter
7	Slave Cable/Batteries (under seat)
8	M16 Rifle
9	Combat Rations (under seat)
10	Tool Box (under seat)
11	Ammunition (5.56 mm)
12	Night Vision Sight and Case AN/TVS-5 (MK19) or AN/PVS-4 (M60)
13	Radio Antenna (on cargo shell)
14	MK19 Grenade Launcher or M60 Machine Gun
15	M3 Tripod
16	Camouflage Screen and Support System
17	Pioneer Kit (rear vehicle under carriage)
18	Spare Barrel (M60) and Cleaning Kit
19	Ammunition (40 mm or 7.62 mm)
20	Water Can
21	Ammunition and Feeder Tray (7.62 mm)
22	Ammunition (40 mm or 7.62 mm)
23	Ammunition (7.62 mm)
24	Ammunition (40 mm) and Night Vision Goggles AN/PVS-5
25	Combat Rations (under seat)
26	M16A1/M203 Rifle
27	Adjustable Gunner's Platform
28	Tow and Tire Chains/Jack/Lug Wrench/First Aid Kit (under seat)

NOTE: MG ammunition brackets hold (1) 40 mm or up to (3) 7.62 mm ammunition cans.

INTERNAL TOP VIEW

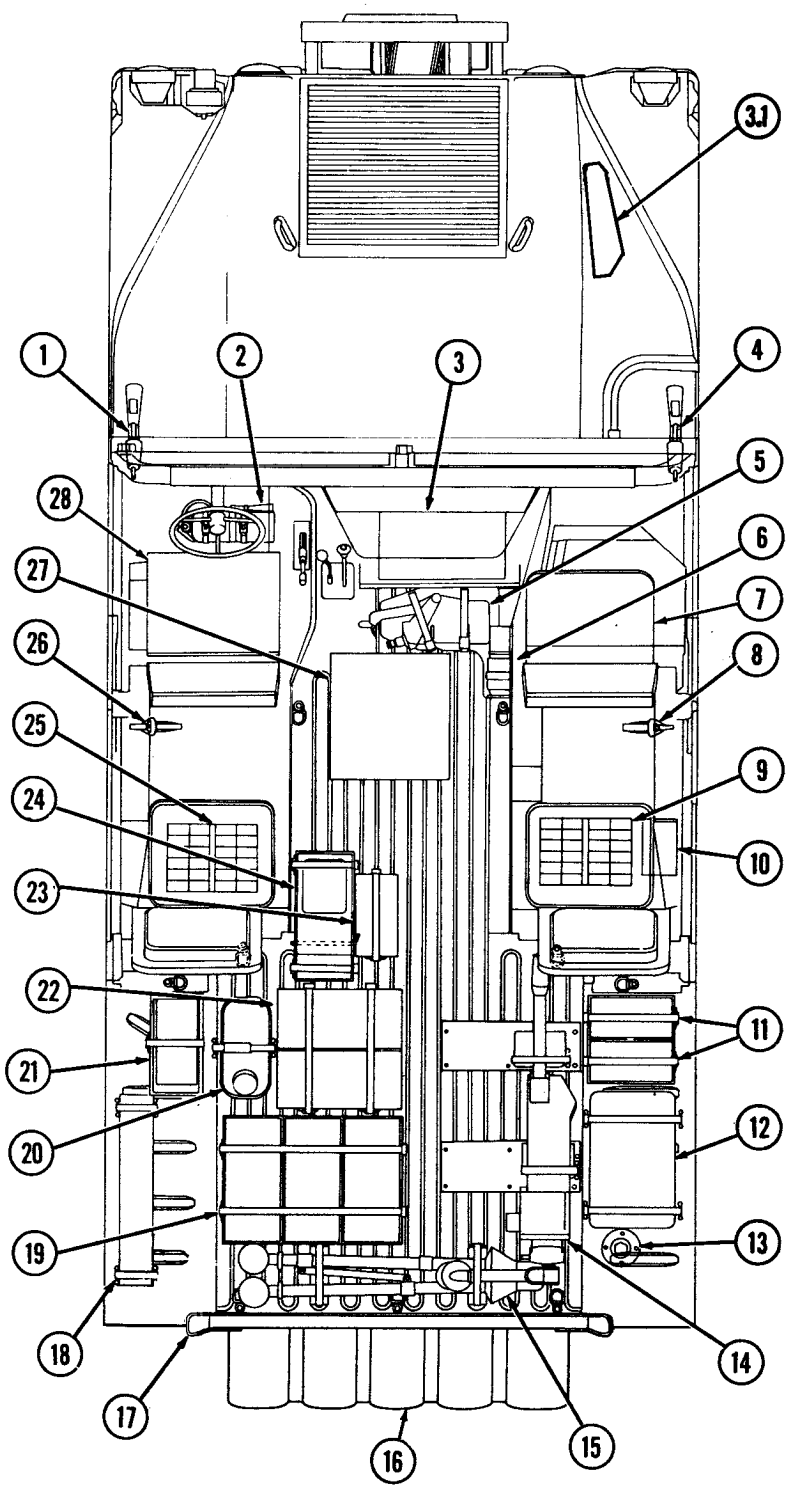

F-6. ARMAMENT CARRIER LOAD PLAN (MK19/40 MM)

This is a standard load plan for the armament carrier. It is designed to supplement the stowage and sign guide contained in Appendix E. It includes selected items of personnel and unit equipment issued to most units within the Army equipped with this vehicle. Equipment not shown in this document may be loaded in accordance with local command policy.

ARMAMENT CARRIER STOWAGE PLAN (40 MM)

LOAD PLAN	
NO.	ITEM
1	M16A1/M203 Rifle
2	Fire Extinguisher
3	AN/GRC-49 Radio
4	Gasoline Cook Stove (strapped to airlift bracket)
4.1	Jack, Scissors (A2 only)
5	M16A1/M203 Rifle
6	MK64 MOD 4 Mount
7	Pintle Adapter
8	M16A1 Rifle
9	Radiac Meter IM 174 PD or AN/VDR-2
10	AN/PVS-5 Night Sight Goggles (2)
11	Hand Grenades (12)
12	Ammunition (5.56/M203-40 mm)
13	AN-TVS-5 Night Sight
14	Radio Antenna (on cargo shell)
15	MK19 Grenade Launcher
16	Camouflage Screen and Support System
17	Ammunition (MK19-40 mm)
18	M3 Tripod
19	Water Can
20	TA-312/PT Telephone
21	Radio Antenna
22	DR8 Cable Reel
23	Ammunition (5.56/M203-40 mm)
24	M13 Decon Kit
25	Ammunition (40 mm) and Mounting Bracket/MK64
26	Ammunition (5.56)
27	Demolition Kit
28	PEWS AN/THS-2
29	AN/PVS-4 Individual Vision Sight
30	Adjustable Gunner's Platform and MK64 Mount when AN/GRC 49 Radio is installed

INTERNAL TOP VIEW

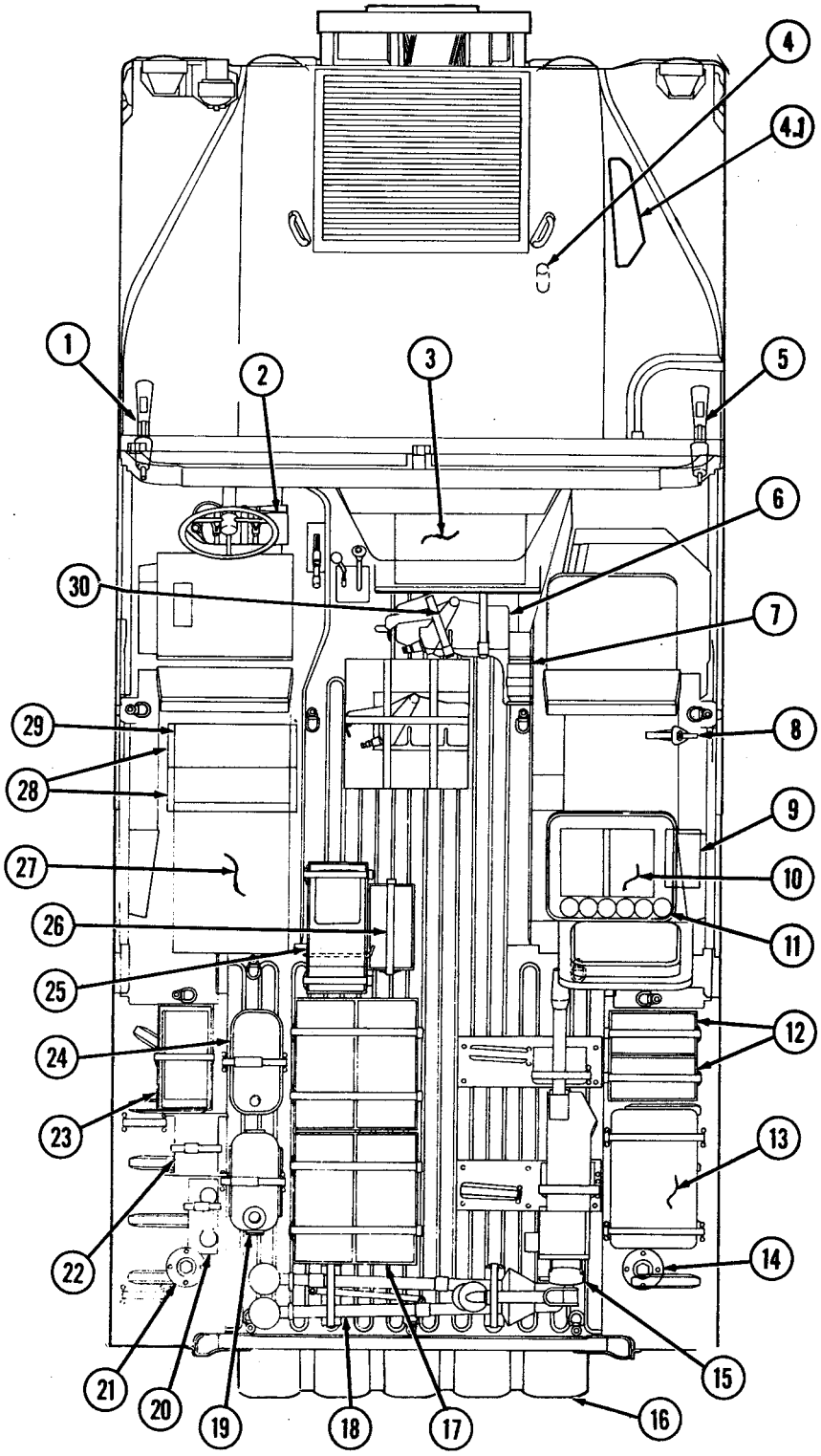

F-7. ARMAMENT CARRIER LOAD PLAN (M2/.50 CAL)

This is a standard load plan for the armament carrier. It is designed to supplement the stowage and sign guide contained in Appendix E. It includes selected items of personnel and unit equipment issued to most units within the Army equipped with this vehicle. Equipment not shown in this document may be loaded in accordance with local command policy.

ARMAMENT CARRIER (M2/.50 CAL)
ARMY STOWAGE PLAN

LOAD PLAN	
NO.	ITEM
1	Fire Extinguisher
2	M16A1/M203 Rifle
3	AN/GRC-160 Radio
4	Gasoline Cook Stove (strapped to airlift bracket)
4.1	Jack, Scissors (A2 only)
5	M16A1/M203 Rifle
6	MK64 MOD 4 M2 MG Mount
7	Pintle Adapter
8	M16A1 Rifle
9	Radiac Meter IM 174 PD or AN/VDR-2
10	AN/PVS-5 Night Sight Goggles (2)
11	Hand Grenades (12)
12	Ammunition (5.56/M203-40 mm)
13	Night Sight AN-TVS-5
14	Infrared Viewer AN PAS-7
15	Radio Antenna (on cargo shell)
16	Machine Gun (M2/.50 cal)
17	Camouflage Screen and Support System
18	Infrared Observation Set AN GVS-5 Laser
19	Ammunition (M2/.50 cal)
20	M3 Tripod
21	Water Can
22	Telephone TA-312 PT
23	Antenna AT 784
24	DR8 Cable Reel
25	Spare Barrel (M2/.50 cal) and Cleaning Kit
26	Ammunition (M2/.50 cal) Mounted in MG Feed Tray
27	M13 Decon Kit
28	Demolition Kit
29	PEWS AN/THS-2
30	Individual Vision Sight AN/PVS-4
31	Adjustable Gunner's Platform

INTERNAL TOP VIEW

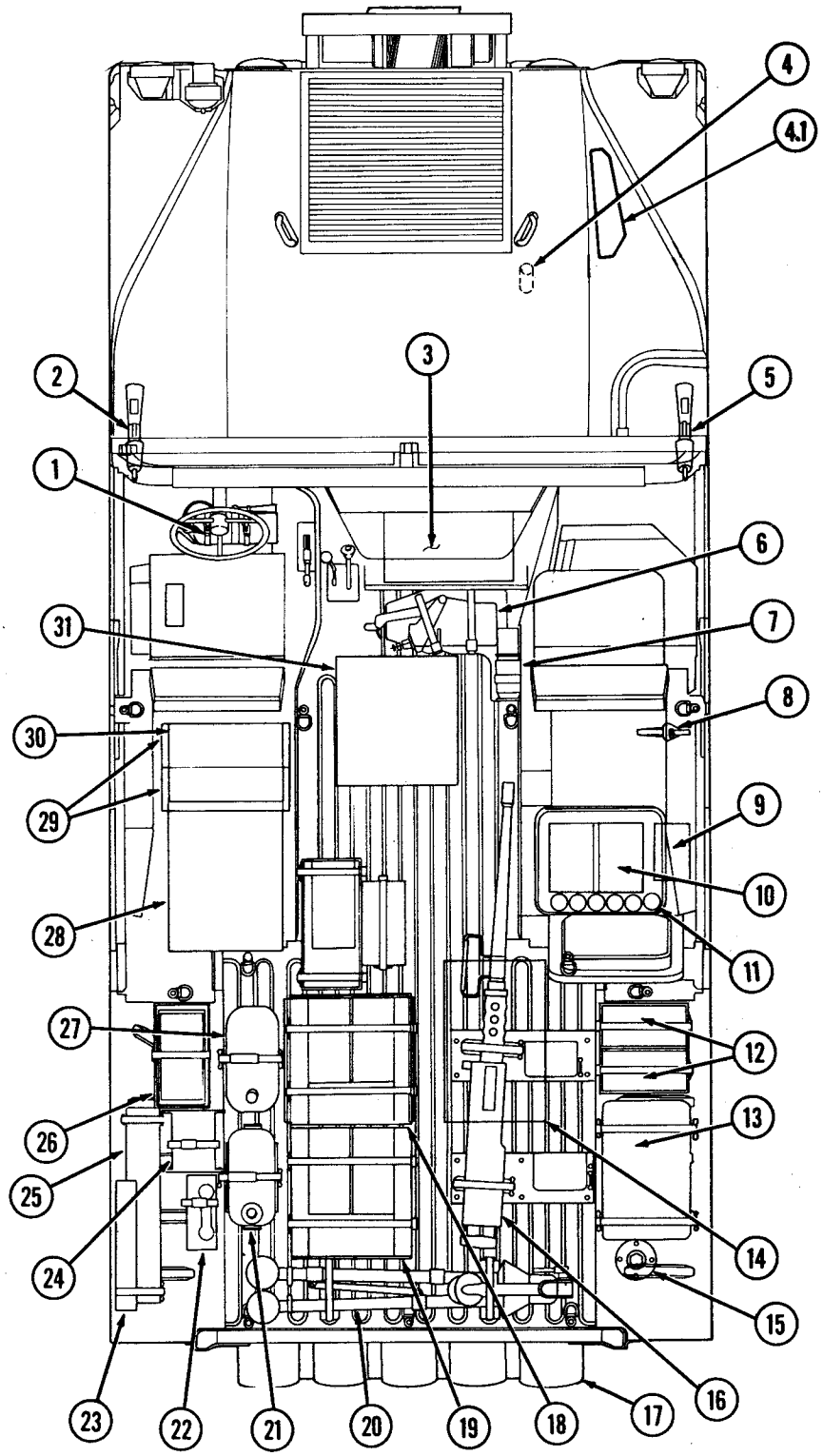

F-8. ARMAMENT CARRIER LOAD PLAN (M60/7.62 MM)

This is a standard load plan for the armament carrier. It is designed to supplement the stowage and sign guide contained in Appendix E. It includes selected items of personnel and unit equipment issued to most units within the Army equipped with this vehicle. Equipment not shown in this document may be loaded in accordance with local command policy.

ARMAMENT CARRIER STOWAGE PLAN (M60/7.62 MM)

LOAD PLAN	
NO.	ITEM
1	M16A1/M203 Rifle
2	Gasoline Cook Stove (strapped to airlift bracket)
2.1	Jack, Scissors (A2 only)
3	M16A1/M203 Rifle
4	MK64 MOD/M60 MG Mount
5	Pintle Adapter
6	M16A1/M203 Rifle
7	Adjustable Gunner's Platform
8	Radiac Meter IM 174 PD or AN VDR-2
9	Night Vision Goggles (2)
10	Hand Grenades (12)
11	Ammunition (5.56/M203-40 mm)
12	Night Sight AN-TVS-5
13	Infrared Viewer AN/PAS-7
14	Radio Antenna (on cargo shell)
15	Machine Gun M60
16	Infrared Observation Set AN/GVS-5 Laser
17	Camouflage Screen and Support System
18	M2 Tripod
19	Ammunition (M60/7.62 mm)
20	Water Can
21	Telephone TA-312/PT
22	Antenna AT1784
23	Cable Reel DR-8
24	Spare Barrel (M60/7.62 mm) and Cleaning Kit
25	Ammunition (M60/7.62 mm)
26	M13 Decon Kit
27	Demolition Kit
28	PEWS AN/THS-2
29	Individual Vision Sight AN/PVS-4
30	Fire Extinguisher
31	AN/GRC-160 Radio

INTERNAL TOP VIEW

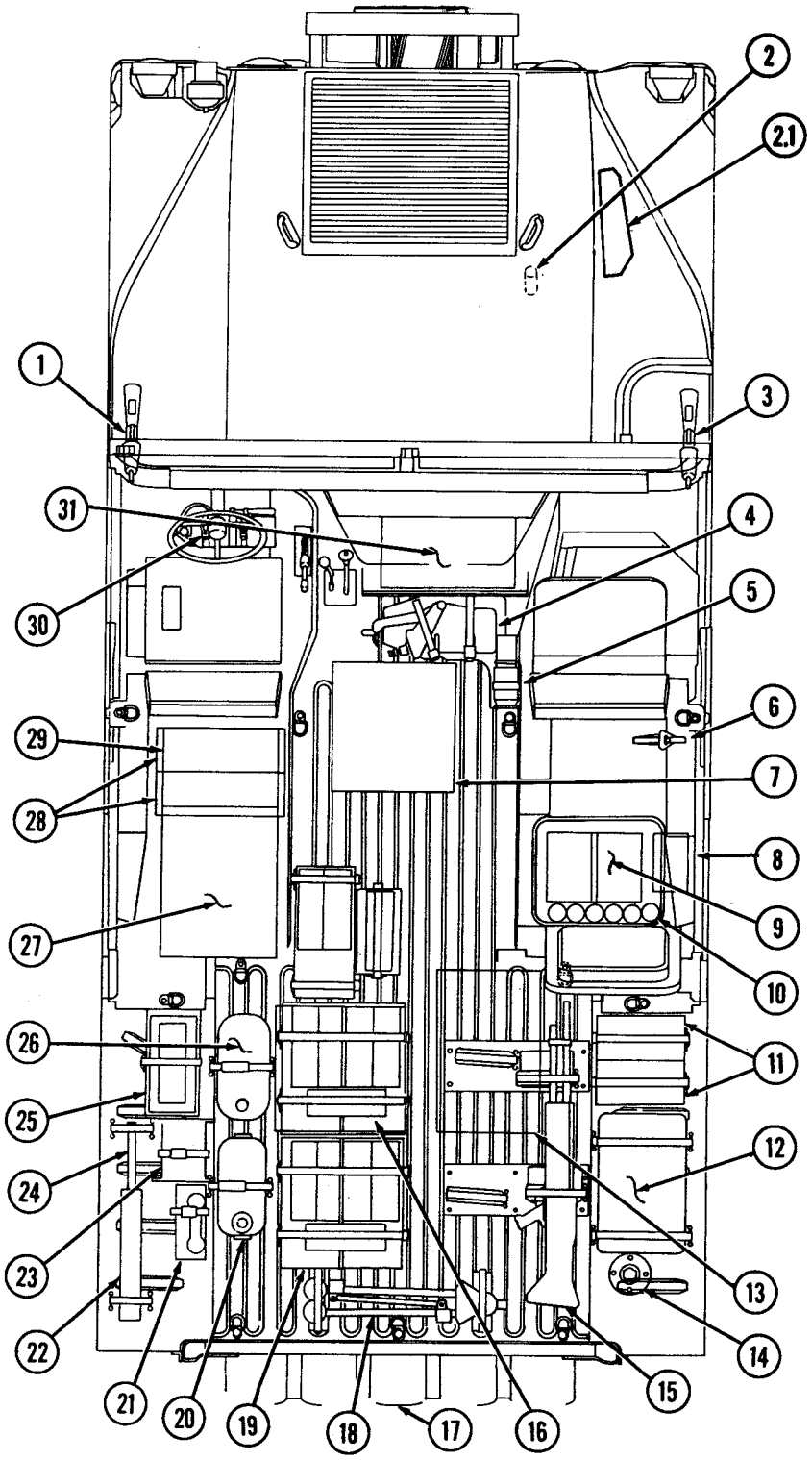

F-9. M997, M997A1, AND M997A2 AMBULANCE LOAD PLAN

This is a standard load plan for the M997, M997A1, and M997A2 ambulance. It is designed to supplement the stowage and sign guide contained in Appendix E. It includes selected items of personnel and unit equipment issued to most units within the Army and Marines equipped with this vehicle. Equipment not shown in this document may be loaded in accordance with local command policy.

AMBULANCE STOWAGE PLAN

LOAD PLAN	
NO.	**ITEM**
1	NBC Patient Masks, Hoses, and Fittings
2	Portable Heart Monitor
3	Oxygen Tanks (two on right side)
4	Attendant Seat (stowed position)
5	Short Spineboard (on right wall)
6	Litters (2) (stowage when upper litter rack is used as backrest)
7	Spreader Bar
8	Litters (2) (in upper compartment)
9	Litter Rail Extension (in lower compartment)
10	Medical Bags, Splint Set, and NBC Equipment Stowage (under
	litter bench)
11	Long Spineboard (on left wall)
12	Medical Supplies and Equipment (medications and IV bags)
13	External Stowage for Optional Equipment
14	Aspirator/Resuscitator
15	Oxygen Tanks (two on left side)

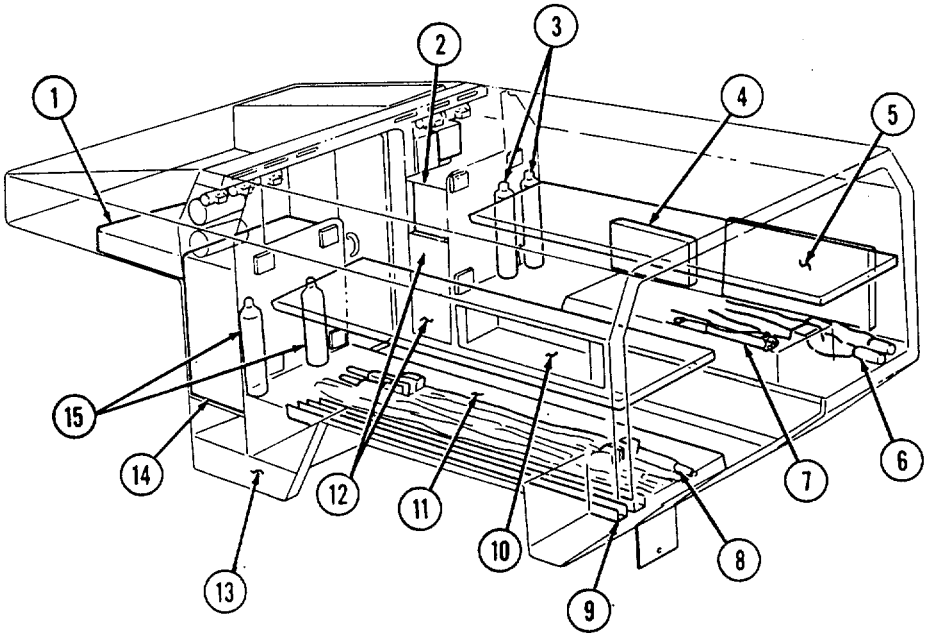

F-19

F-10. M996 AND M996A1 AMBULANCE LOAD PLAN

This is a standard load plan for the M996 and M996A1 ambulance. It is designed to supplement the stowage and sign guide contained in Appendix E. It includes selected items of personnel and unit equipment issued to most units within the Army and Marines equipped with this vehicle. Equipment not shown in this document may be loaded in accordance with local command policy.

AMBULANCE STOWAGE PLAN

LOAD PLAN	
NO.	ITEM
1	Aspirator/Resuscitator
2	Blanket Set
3	Splint Set
4	Oxygen Tank (on right wall)
5	NBC Patient Masks, Hoses, and Fittings
6	Attendant Seat (stowed position)
7	Medical Instrument and Supply Set
8	Short Spineboard (on right wall)
9	Litters (2) (stowage when patient seat is open)
10	Spreader Bar
11	Medical Instrument and Supply Set
12	Litter Rail Extension
13	Long Spineboard (on left wall)
14	Portable Heart Monitor
15	External Stowage for Optional Equipment
16	IV Bags
17	Oxygen Tank (on left wall)

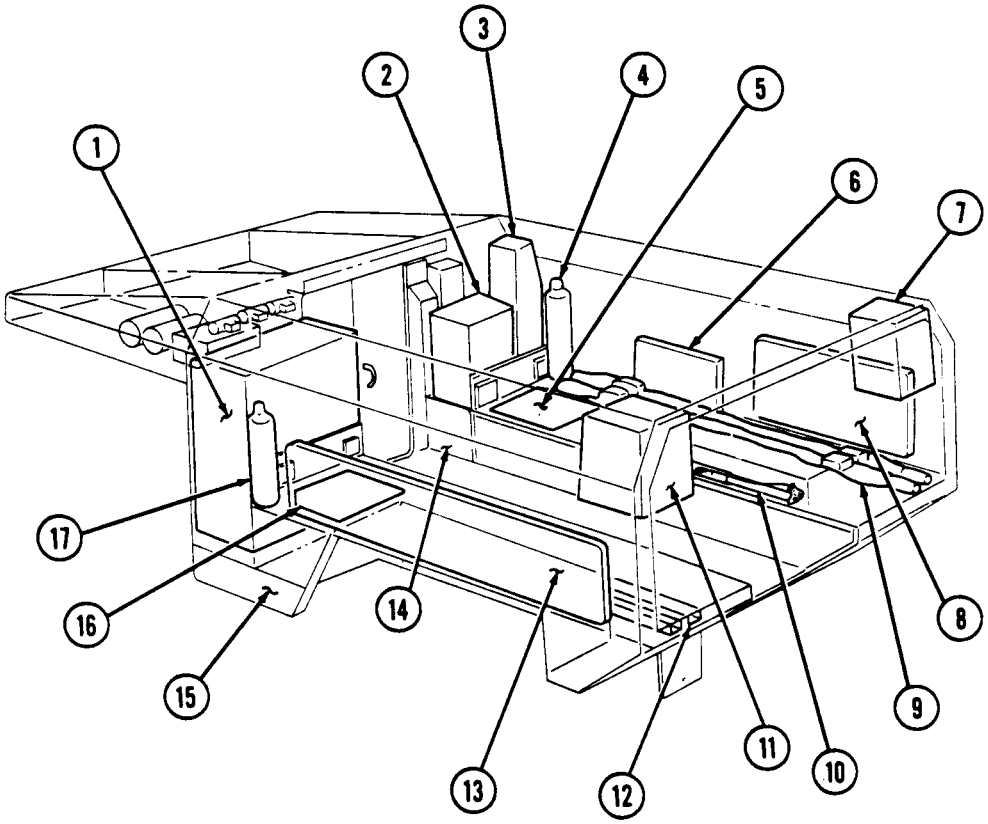
1
2
3
4
5
6
7
8
9
10
11
12
13
14
15
16
17

F-11. HEAVY VARIANT STOWAGE PLAN

This is the standard load plan for the M1097, M1097A1, M1097A2, M1123, and heavy variants equipped with a howitzer prime mover or towed vulcan kit. It is designed to supplement the stowage and sign guide contained in Appendix E. It includes selected items of personnel and unit equipment issued to most units within the Army equipped with this vehicle. Equipment not shown in this document may be loaded in accordance with local command policy.

HEAVY VARIANT STOWAGE PLAN

LOAD PLAN	
NO.	ITEM
1	Camouflage Screen and Support System
2	Fuel (Diesel) Cans (2)
3	Remote
4	M122 Tripod
5	Telephone
6	DR8 Cable Reels (2)
7	Paralleloscope and Aiming Posts
8	Jack Strut
9	Paralleloscope Spikes (2)
10	Ammo (22 Rounds)
11	M60 Machine Gun
12	Sight Box #2
13	Sight Box #1
14	GDU Battery
15	GDU Box
16	Section Chest
17	Water Cans (2)
18	Spade
19	Jack, Scissors (A2 and M1123 only)

INTERNAL TOP VIEW

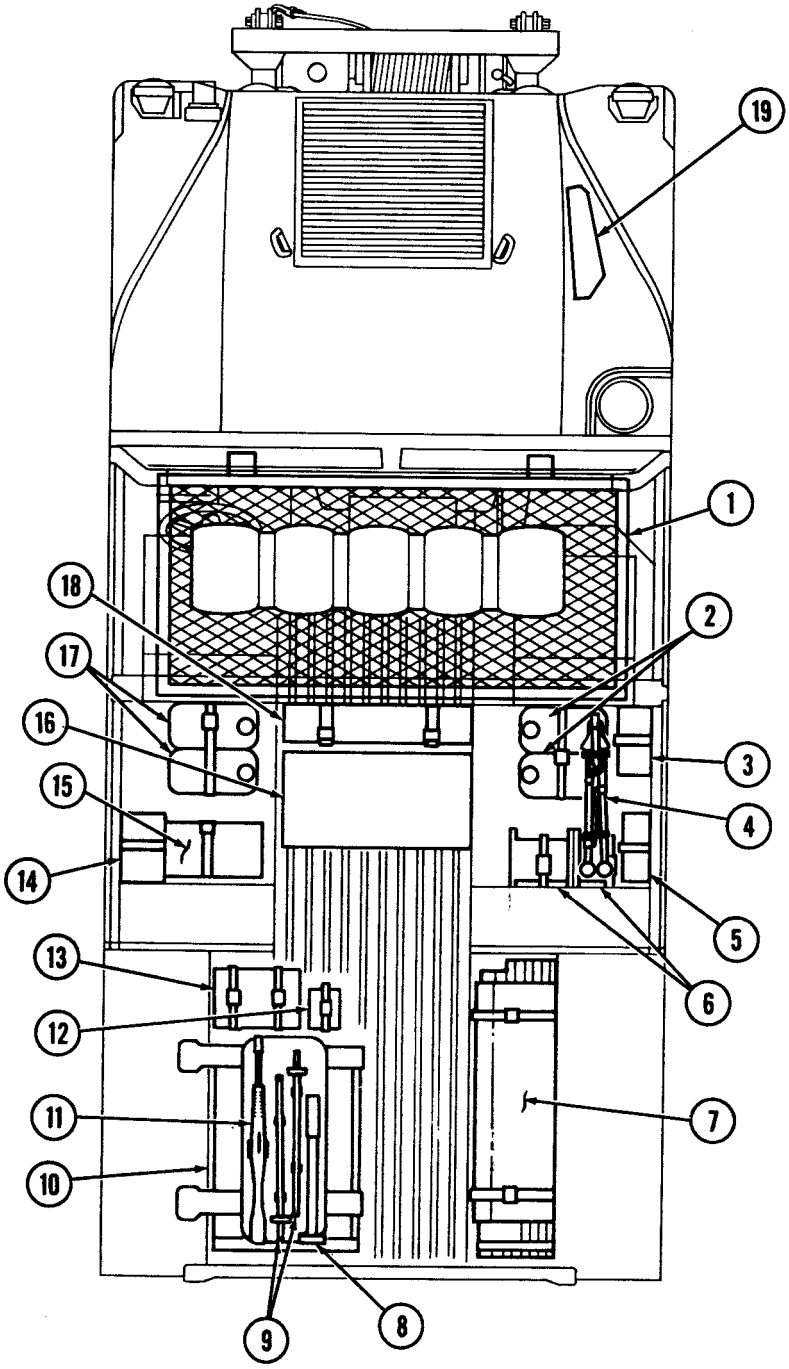

APPENDIX G
LUBRICATION INSTRUCTIONS

G 1. SCOPE

This appendix gives lubrication requirements for the M998 series vehicles which are the responsibility of the operator/crew.

G-2. GENERAL LUBRICATION REQUIREMENTS

a. Maintaining Lubricant Levels. Lubricant levels must be checked as specified in the PMCS (Chapter 2, Section 2) and Table G-I, Lubrication. Steps must be taken to replenish and maintain lubricant levels.

WARNING

- Drycleaning solvent P-D-680 is TOXIC and flammable. Wear protective goggles and gloves, use only in well-ventilated area, avoid contact with skin, eyes, and clothes, and do not breathe vapors. Keep away from heat and flame. Never smoke when using solvent. The flashpoint for type I drycleaning solvent is 100°F (38°C), and for type II, is 138°F (50°C). Failure to do so may result in injury or death to personnel.
- If personnel become dizzy while using cleaning solvent, immediately get fresh air and medical help. If solvent contacts skin or clothes, flush with cold water. If solvent contacts eyes, immediately flush eyes with water and get medical attention.

b. Cleaning Fittings Before Lubrication. Clean parts with drycleaning solvent P-D-680 or equivalent. Dry before lubricating. Dotted arrow points indicate lubrication on both sides of the equipment.

c. Lubrication After Fording. If fording operation occurs, lubricate all fittings below fording depth and check submerged gear boxes for presence of water.

d. Lubrication After High-Pressure Washing. After a thorough washing, lubricate all grease fittings and oil can points outside and underneath vehicle.

e. Localized Views. A reference to the appropriate localized view is given after most lubrication entries. Localized views begin on page G-11.

G-3. LUBRICATION INTERVALS

a. Service Interval Under Normal Conditions. Service intervals listed are for normal operation in moderate temperatures, humidity, and atmospheric conditions. Hard time intervals may be shortened if your lubricants are contaminated or if you are operating the equipment under adverse conditions, including longer-than-usual operating hours. Hard time intervals may be extended during periods of low activity, though adequate preservation precautions must be taken. Perform semi-annual service intervals every six months, or 3,000 miles (4,827 km), whichever comes first.

b. Service Interval Under Unusual Conditions. Increase frequency of lubricating service when operating under abnormal conditions such as high or low temperatures, prolonged high speed driving, or extended cross-country operations. Such operation can diminish lubricant's protective qualities. More frequent lubricating service intervals are necessary to maintain vehicle readiness when operating under abnormal conditions.

c. Hard Time Intervals. Intervals shown in this appendix are based on mileage and calendar times. An example of mileage and calendar interval is: 3/S, in which 3 stands for 3,000 mi (4,827 km), and S stands for semiannually (every six months). The lubrication for the vehicle is to be performed at whichever interval occurs first. For equipment under manufacturer's warranty, hard time oil service intervals shall be followed.

d. Army Oil Analysis Program (AOAP). HMMWV engines and transmissions are enrolled in the Army Oil Analysis Program (AOAP). The sampling interval for the engine is every six months or 3,000 miles (4,827 km) (or 100 hours if hour meter is installed) of operation. For the transmission, the sampling interval is every 12 months or 6,000 miles (9,654 km) (or 300 hours if hour meter is installed) of operation.

G-4. LUBRICATION FOR OPERATION UNDER EXTREME TEMPERATURES

a. Changes in Lubricant Grades. Lubricant grades change with weather conditions. Refer to Lubrication Table for lubricant grade changes.

b. Arctic Conditions. Refer to FM 9-207, Operation and Maintenance of Ordnance Materiel in cold Weather (0°F to -65°F) (-18°C to -54°C), or the Lubrication Table.

G-5. CORROSION CONTROL

Refer to para 2-4 for appropriate corrosion control procedures.

Table G-1. Lubrication

USAGE	FLUID/LUBRICANT	CAPACITIES	EXPECTED TEMPERATURES
Engine Oil (MIL-L-2104) (MIL-L-46167)	OE/HDO 30 OE/HDO 10 OEA	Crankcase: w/o filter 7 qt (6.6 L) w/ filter 8 qt (7.6 L) Dry System 10 qt (9.5 L)	Above + 15° F (-9° C) +40° to -15° F (+4° to -26° C) +40° to -65° F (+4° to -54° C)
Engine Coolant	Ethylene Glycol and Water 1/4 Ethylene Glycol, 3/4 Water 2/5 Ethylene Glycol, 3/5 Water 3/5 Ethylene Glycol, 2/5 Water	Radiator: 5 qt (4.7 L) Complete System: 26 qt (24.6 L)	 Above +15° F (-9°C) +40° to -15° F (+4° to -26° C) +40° to -65° F (+4° to -54° C)
Transmission (3L80) (4L80-E)	Dexron® II or Dexron® III Dexron® III OEA	Dry 11 qt (10.4 L) Drain & Refill 6 qt (5.7 L) Dry 13.5 qt (12.8 L) Drain & Refill 7.7 qt (7.3 L)	All Temperatures (except arctic) All Temperatures (except arctic) Arctic Temperatures
Steering System	Dexron® II or Dexron® III	1 qt (0.95 L) w/Cooler 1.25 qt (1.18 L)	All Temperatures
Upper Ball Joints (all vehicles), Lower Ball Joints (A2 and M1123 vehicles only), Tie Rod Ends, Pitman Arm, Propeller Shafts, etc.	GAA	As Required	All Temperatures
Hinges, Cables, and Linkages	OE/HDO	As Required	All Temperatures
OE/HDO 15/40 (Grade 15W-40) lubricant may be used when expected temperatures are above +5°F (–15°C). If OEA lubricant is required to meet the temperature ranges prescribed in the Lubrication Table, then the OEA lubricant is to be used in place of OE/HDO 10 lubricant for all temperature ranges. If operating conditions are severe or abnormal, service chassis lubrication points at 1,000 mi (1,609 km).			

Table G-1. Lubrication (Cont'd)

LUBRICANTS	EXPECTED TEMPERATURES
GAA-GREASE, AUTOMOTIVE AND ARTILLERY (MIL-G-10924)	ALL TEMPERATURES
PL-S-LUBRICATING OIL, GENERAL PURPOSE, PRESERVATIVE, (WATER DISPLACING LOW TEMPERATURE) (VV-L-800A)	ALL TEMPERATURES
GWR-GREASE, WIRE ROPE (MIL-G-18458)	ALL TEMPERATURES

FUEL REQUIREMENTS — TEMPERATURE LIMITS (VV-F-800)

Grade DF2 Fuel	For use above +10°F (-12°C)*
Grade DF1**	For use below +10°F (-12°C) to above -20°F (-29°C)
Grade DFA	For use below -20°F (-29°C)

* Temperature limits may vary dependent on the cloud point of the actual DF2 fuel being supplied in the geographical area.

** DF1 is not normally procured in CONUS or OCONUS. Refineries will blend DF2 with kerosene to meet temperature requirements of DF1.

LUBRICATION POINTS

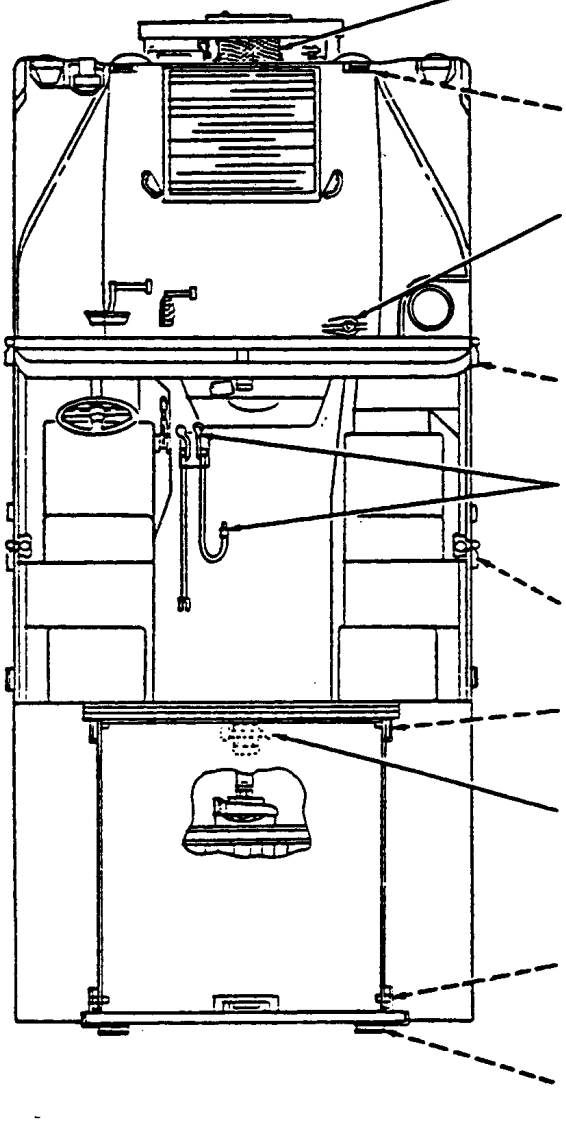

INTERVAL	LUBRICANT	
3/S	GWR	Winch Wire Rope (See note 2)
3/S	OE/ HDO	Hood Hinges (See note 1)
3/S	OE/ HDO	Heater Control Shutoff Valve Lever and Pin (LV-A) (See note 1)
3/S	OE/ HDO	Door Hinges (See note 1)
3/S	OE/ HDO	Transmission Shift Linkage (See note 1)
3/S	OE/ HDO	Door Hinges (See note 1)
3/S	PL-S	Cargo Shell Door Latches (See note 1)
3/S	PL-S	Cargo Shell Door Front Paddle Lock (See note 1)
3/S	PL-S	Cargo Shell Door Latches (See note 1)
3/S	OE/ HDO	Tailgate Hinges (See note 1)

NOTE

A REFERENCE TO THE LOCALIZED VIEW (LV) IS PROVIDED AFTER LUBRICATION POINT ENTRY, WHERE APPLICABLE.

LUBRICATION POINTS (Cont'd)

LUBRICANT • INTERVAL

Accelerator Linkage (LV-B) (See note 1)	**OE/ HDO**	**3/S**
Heater Control Knob and Plunger (LV-C) (See note 1)	**OE/ HDO**	**3/S**
Transfer Case Shift Linkage (See note 1)	**OE/ HDO**	**3/S**
Door Handles (See note 1)	**OE/ HDO**	**3/S**
Cargo Shell Door Rear Wire Handle Lock (See note 1)	**PL-S**	**3/S**

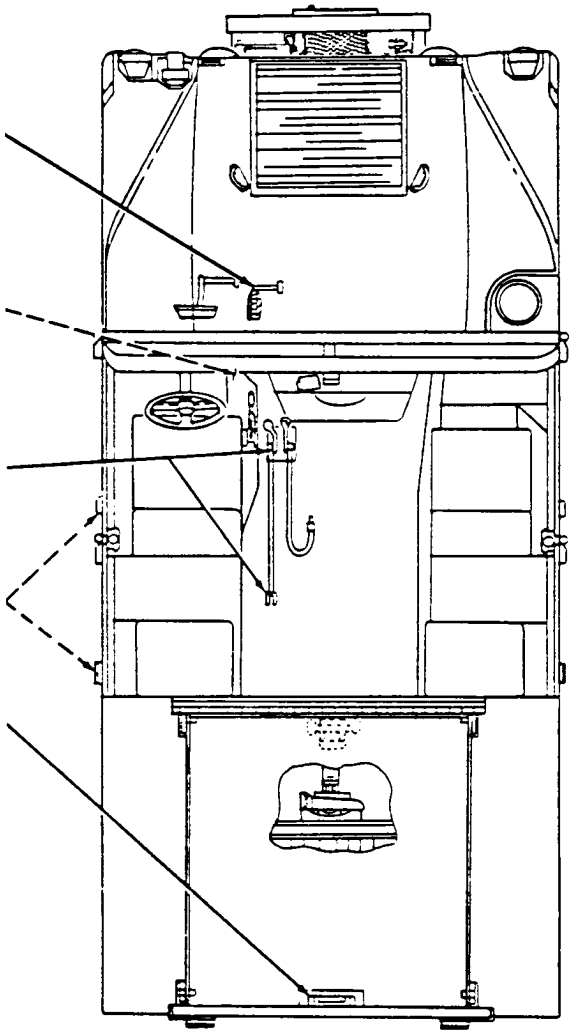

NOTE

A REFERENCE TO THE LOCALIZED VIEW (LV) IS PROVIDED AFTER LUBRICATION POINT ENTRY, WHERE APPLICABLE.

LUBRICATION POINTS (Cont'd)

INTERVAL • LUBRICANT

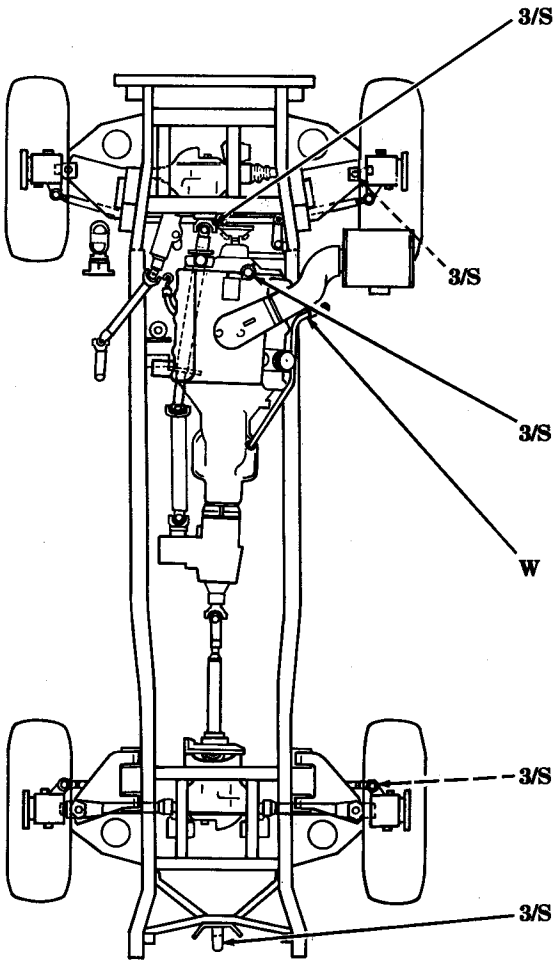

GAA	Front Propeller Shaft Universal Joint and Slip Yokes (3 fittings) (LV-D, LV-E) (See note 4)
GAA	Upper Control Arm Ball Joints (all vehicles). Lower Control Arm Ball Joints (A2 and M1123 vehicles only) (LV-S, T) (See note 4)
OE/ HDO	Crankcase Fill (LV-F) (See note 7)
Dexron® II or III for 3L80 Dexron® III for 4L80-E	Transmission Fill and Level (Check Level) (LV-G) (See note 6)
GAA	Radius Rods (LV-H) (See note 4)
OE/ HD0	Pintle (See note 3) (LV-I)

NOTE

A REFERENCE TO THE LOCALIZED VIEW (LV) IS PROVIDED AFTER LUBRICATION POINT.

LUBRICATION POINTS (Cont'd)

LUBRICANT • INTERVAL

Power Steering Reservoir Fill and Level (Check level) (LV-J) (See note 5)	**Dexron® II or Dexron® III**	**D**
Front Propeller Shaft, Universal Joints and Slip Yokes (3 fittings) (LV-D, E) (See note 4)	**GAA HDO**	**3/S**

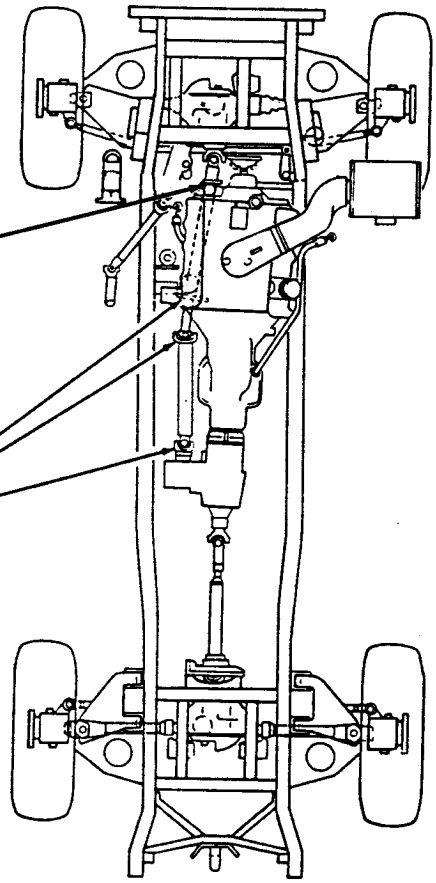

NOTE

A REFERENCE TO THE LOCALIZED VIEW (LV) IS PROVIDED AFTER LUBRICATION POINT.

LUBRICATION POINTS (Cont'd)

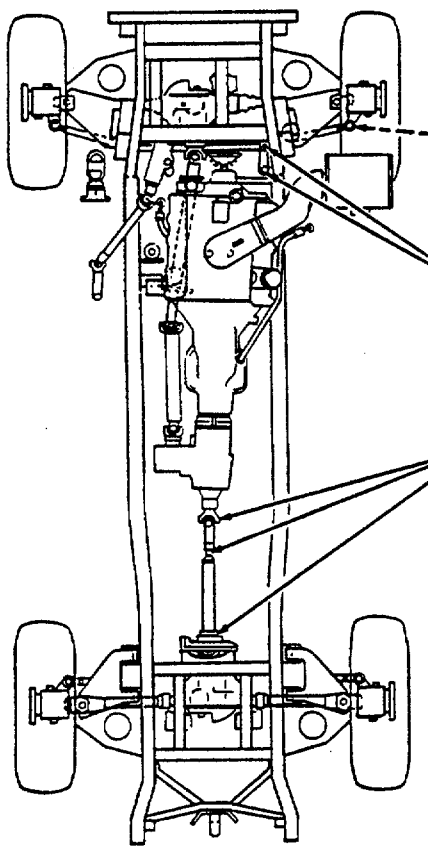

INTERVAL	LUBRICANT	
3/S	GAA	Tie Rod Ends (2 fittings) (LV-K) (See note 4)
3/S	GAA	Idler Arm (2 fittings) (LV-M) (See note 4)
3/S	GAA	Rear Propeller Shaft Universal Joints and Slip Yokes (3 fittings) (LV-N, O)

NOTE

A REFERENCE TO THE LOCALIZED VIEW (LV) IS PROVIDED AFTER LUBRICATION POINT.

LUBRICATION POINTS (Cont'd)

LUBRICANT • INTERVAL

Pitman Arm (LV-L) (See note 4)	**GAA**	**3/S**
Intermediate Steering Shaft (3 fittings) (LV-P, Q) (See note 4)	**GAA**	**3/S**
Crankcase Level (LV-R) (See note 7)	**OE/ HDO**	**D**

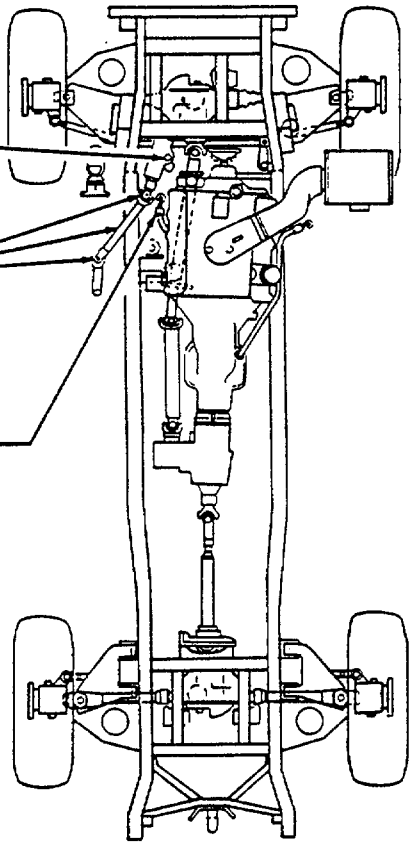

NOTE

A REFERENCE TO THE LOCALIZED VIEW (LV) IS PROVIDED AFTER LUBRICATION POINT.

LOCALIZED LUBRICATION POINTS

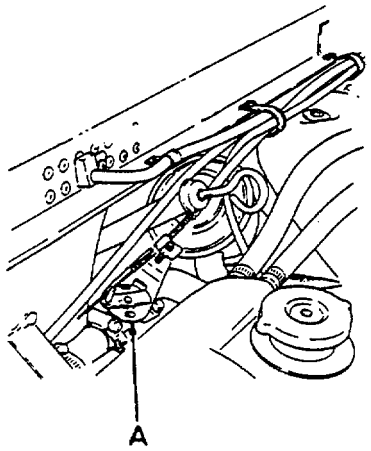

HEATER CONTROL SHUTOFF VALVE LEVER AND PIN

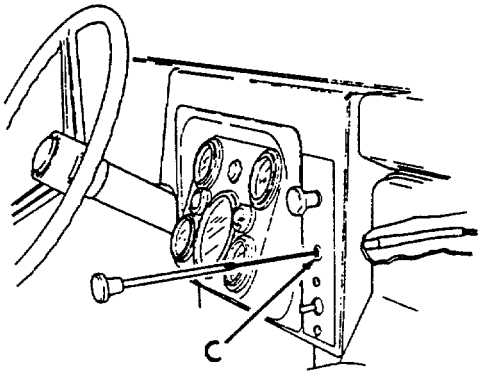

HEATER CONTROL KNOB AND PLUNGER

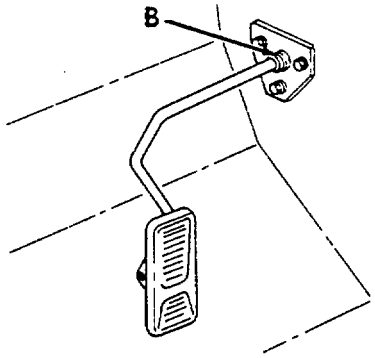

ACCELERATOR LINKAGE

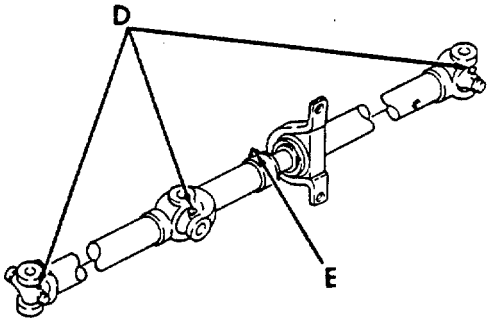

FRONT PROPELLER SHAFT UNIVERSAL AND SLIP JOINTS

LOCALIZED LUBRICATION POINTS

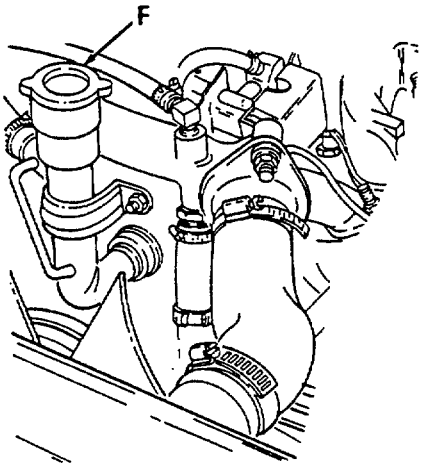

CRANKCASE FILL

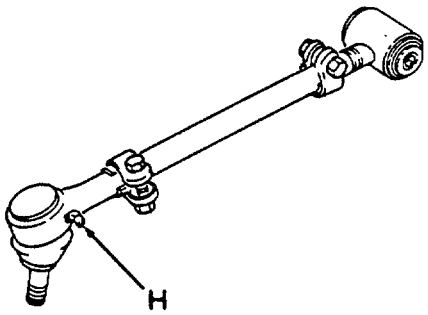

RADIUS ROD

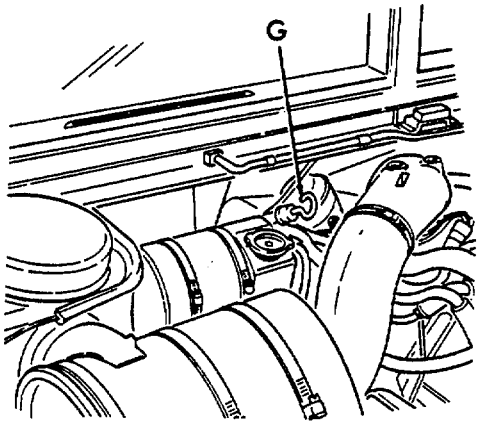

TRANSMISSION FILL AND LEVEL

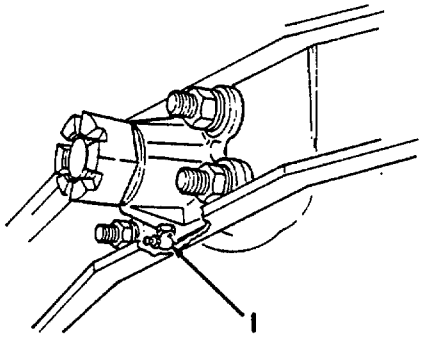

PINTLE

LOCALIZED LUBRICATION POINTS

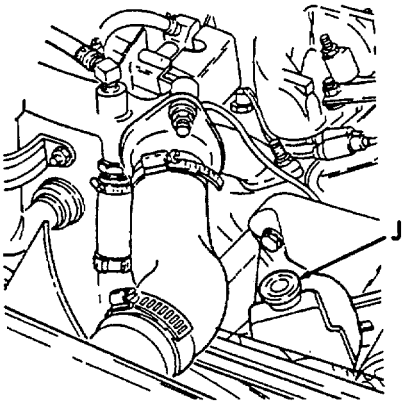

POWER STEERING RESERVOIR FILL AND LEVEL

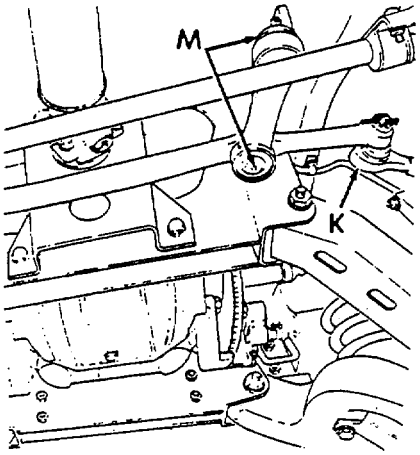

IDLER ARM AND TIE ROD

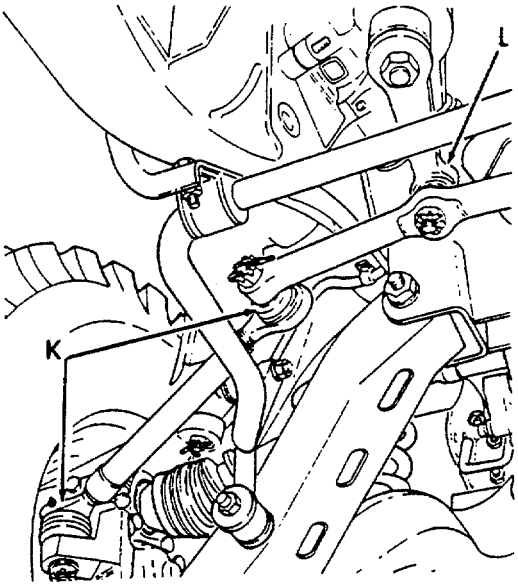

TIE ROD AND PITMAN ARM

LOCALIZED LUBRICATION POINTS (Cont'd)

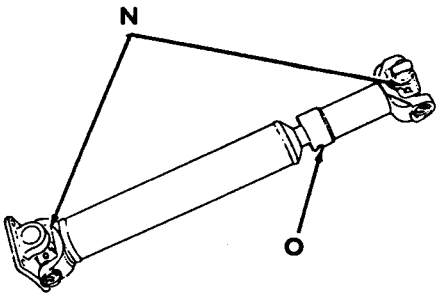

REAR PROPELLER SHAFT
UNIVERSAL JOINTS AND SLIP YOKES

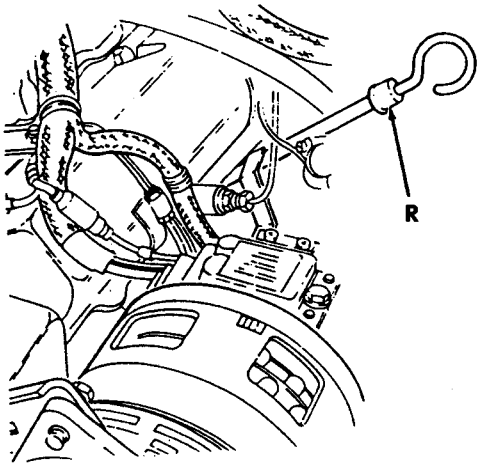

CRANKCASE LEVEL

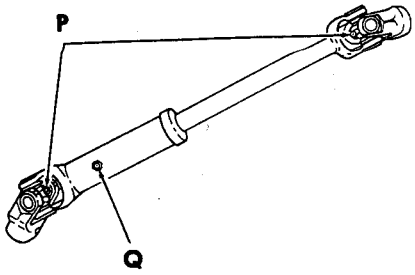

INTERMEDIATE
STEERING SHAFT

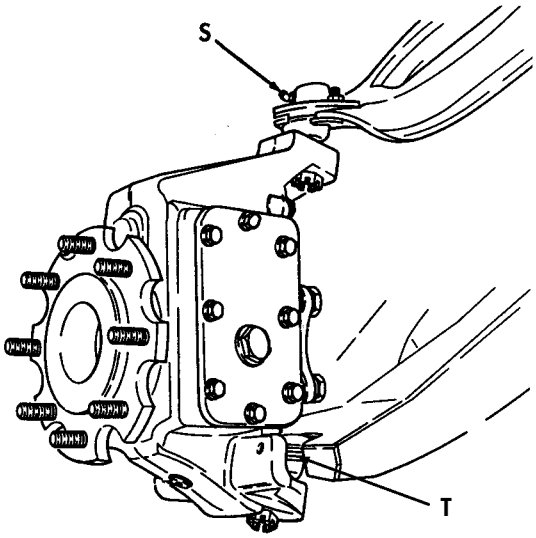

GEARED HUB AND
UPPER CONTROL ARM BALL JOINT

NOTES

1. Oil Can Points.

Lubricate all oil can points every 3,000 mi (4,827 km), or semi-annually, whichever occurs first. Use seasonal grade OE on hood hinges, tailgate hinges, door hinges, door handles, transfer case shift linkage, accelerator linkage, transmission shift linkage, heater control shutoff valve lever and pin, and heater control knob and plunger. Lubricate cargo shell door front paddle lock, rear wire handle lock and cargo shell door latches with PL-S, (M996, M996A1, M1025, M1025A1, M1025A2, M1026, M1026A1, M1036, M1043, M1043A1, M1043A2, M1044, M1044A1, M1045, M1045A1, M1045A2, M1046, and M1046A1 only).

2. Winch Wire Rope.

WARNING

Wear leather gloves when handling winch wire rope. Do not handle wire rope with bare hands. Broken wires cause injury.

After each use, clean and lubricate winch wire rope. Clean entire wire rope with wire brush. Do not lubricate winch wire rope in dry, dusty conditions. Perform winch wire rope cleaning and lubrication every 3,000 mi (4,827 km) or semiannually, whichever occurs first, when wire rope is not used.

3. Pintle.

Every 3,000 mi (4,827 km), or semi-annually, whichever occurs first, clean pintle with wire bush and lubricate rear plate fitting with seasonal grade OE.

4. Steering System.

CAUTION

Do not over lubricate tie rod ends and upper and lower ball joints. One or two shots is adequate. Excessive lubrication will result in the boot rupturing. Observe the boot during lubrication: a seeping condition indicates adequate lubrication; expansion of the boot indicates over lubrication.

Lubricate front propeller shaft, steering column, U-joints, slip yokes, tie rods, upper and lower ball joints, radius rods, pitman arm, intermediate steering shafts, and idler arm with GAA every 3,000 mi (4,827 km), or semiannually, whichever comes first.

5. Power Steering Reservoir.

CAUTION

Use Dexron® II or Dexron® III for filling power steering reservoir. Failure to use Dexron® II or Dexron® III will cause damage to power steering system.

Check the fluid level in the power steering reservoir and adjust level as necessary. Level must be above “ADD” mark. Fluid does not require periodic changing.

NOTES

6. Transmission.

CAUTION

- Do not overfill transmission. The fluid level rises as the fluid temperature increases. Therefore, do not check level before the transmission has reached normal operating temperature. The safe operating level is within the crosshatch marks on the dipstick. Overfilling will result in damage to transmission.
- Use Dexron® II (3L80) or Dexron® III (4L80-E) for filling transmission. Failure to use Dexron® II or Dexron® III will cause damage to transmission.

Check and fill transmission to proper level weekly. Operate transmission through all operating ranges to fill cavities and fluid passages. With vehicle positioned on level ground, allow engine to idle, shift transmission to neutral, and apply parking brake. Check fluid level on dipstick. It should register within the crosshatch marks under the conditions stated above. On vehicles equipped for deep water fording, the dipstick has a seal which fits into the opening of the dipstick tube. The dipstick handle must be turned counterclockwise to be released before dipstick is withdrawn. Turn dipstick handle clockwise to seat after installing dipstick. Have fluid changed every 12,000 mi (19,308 km), or biennially, whichever occurs first.

7. Crankcase Oil Level.

CAUTION

- There are two marks on the dipstick: “FULL” and “ADD 1 QT.” The quantity of oil required to raise the oil level from “ADD 1 QT” mark to “FULL” mark is 1 qt (0.9 L). Do not overfill crankcase. Overfilling will result in damage to engine.

NOTE

- If oil level is above “FULL,” it may be due to oil cooler drain back. Operate the engine for one minute, shut down, wait one minute, then recheck oil level.
- Oil is added to crankcase through fill tube which is located on top of engine.

Check crankcase oil level daily. Start engine and visually check for oil leaks at drain plug and oil filter. Stop engine and wait approximately one minute for oil to drain back into oil pan, then recheck oil level with dipstick. On vehicles equipped for deep water fording, the dipstick has a seal which fits into the opening of the dipstick tube. The dipstick handle must be turned counterclockwise to be released before dipstick is withdrawn. Turn handle clockwise to seat after installing dipstick. Have oil changed every 3,000 mi (4,827 km), or semiannually, whichever occurs first.

INDEX

	Para.	Page
A		
Additional authorization list, appendix C		C-1
Adjusting driver's seat	2-14	2-114
Air cleaner dump valve servicing	3-16	3-21
Air cleaner servicing (emergency procedure)	3-15	3-18
Ambulance heating, ventilation, and air-conditioning air intake filter service	3-27	3-34
Ambulance interior electrical controls	2-61	2-198
Ambulance interior light bulb replacement	3-28	3-38
Ambulance litter rack operation	2-62	2-202
Ambulance load plan (M996 and M996A1)	F-10	F-20
Ambulance load plan (M997, M997A1, and M997A2)	F-9	F-18
Ambulance NBC system operation	2-63	2-212
Ambulance operation, general	2-57	2-191
Ambulance rear step assembly operation	2-60	2-197
Ambulance, soft-top (M1035, M1035A1, and M1035A2), litter rack operation	2-58	2-191
Appendix A, references		A-1
Appendix B, components of end item and basic issue items lists		B-1
Appendix C, additional authorization list		C-1
Appendix D, expendable/durable supplies and materials list		D-1
Appendix E, stowage and sign guide		E-1
Appendix F, on-vehicle equipment loading plans		F-1
Appendix G, lubrication instructions		G-1
Arctic operation (All except M1123 and A2 vehicles)	2-39	2-156
Arctic operation (A2 vehicles)	2-40	2-160
Armament carriers, armored (M1025, M1025A1, M1025A2, M1026, and M1026A1)	1-13	1-12
Armament carriers w/supplemental armor load plan	F-3	F-6
Armament carriers w/supplemental armor load plan (A2 vehicles)	F-4	F-8
Armament carriers load plan (MK19/40 mm)	F-6	F-12
Armament carriers, w/supplemental armor (M1043, M1043A1, M1043A2, M1044, and M1044A1)	1-14	1-14
Armament carriers load plan (M2/.50 cal)	F-7	F-14
Armament carriers load plan (M60/7.62 mm)	F-8	F-16
Armament carriers load plan (USAF) (MK19/M60 machine gun)	F-5	F-10
Armament weapon station operation	2-55	2-189
Army regulations	A-8	A-2
B		
Basic issue items, appendix B		B-1
Batteries, servicing	3-11	3-14
Break-in service, general information	1-6	1-3
Break-in service, operation under usual conditions	2-9	2-105
Bridge classification, vehicle (table 1-19)		1-34

INDEX

	Para.	Page
C		
Capacities (table 1-2)		1-23
Cargo barrier extension, removal and installation of	2-51	2-182
Cargo barrier and net, removal and installation of	2-51.1	2-182.2
Cargo shell door operation	2-53	2-184
Cargo tiedown operation	2-45	2-167
Cargo/troop carriers (M998, M998A1, M1038, and M1038A1)	1-9	1-4
Cleaning compound to water ratio (table 3-2)	3-14	3-18
Cleaning instructions	2-4	2-60
Cold weather starting below +32°F (0°C)	2-30	2-139
Companion seat assembly and battery box cover replacement	2-15	2-115
Components of end item and basic issue items lists, appendix B		B-1
Controls, indicators, and equipment	2-2	2-2
Controls, interior electrical, ambulance	2-61	2-198
Coolant surge tank, servicing	3-9	3-12
Cooling system data (table 1-6)		1-25
D		
Deep water fording operation	2-37	2-148
Defroster operation (All except A2 vehicles)	2-17	2-117
Defroster operation (A2 vehicles)	2-18	2-118
Department of the Army pamphlets	A-2	A-1
Differences between models (table 1-1)		1-22
Driver's seat, adjusting	2-14	2-114
Dusty, sandy areas, operating in	2-32	2-141
E		
Electric winch operation	2-26	2-134
Emergency fan clutch override	3-23	3-30
Engine data (6.2 L) (table 1-4)		1-25
Engine data (6.5 L) (table 1-5)		1-25
Engine oil servicing	3-17	3-22
Engine, starting the	2-10	2-105
Equipment characteristics, capabilities, and features	1-7	1-3
Equipment improvement report and maintenance digest (EIR MD)	1-5	1-3
Expendable/durable supplies and materials list, appendix D		D-1
Extreme cold, on ice, or snow, operating in	2-31	2-140
Extreme heat, operating in	2-34	2-143
F		
Fan clutch override, emergency	3-23	3-30
Field manuals	A-4	A-1
Fire extinguisher operation	2-27	2-136
First-aid kit relocation	3-12	3-15
Fluid leakage	2-6	2-63
Fording operation, deep water	2-37	2-148
Fording operation, shallow water	2-36	2-145
Forms, references	A-3	A-1
Four-man cargo area soft top enclosure, removal and installation of	2-49	2-178

INDEX

	Para.	Page
F (Cont'd)		
Four-man crew area soft top and arctic soft top enclosures, removal and installation of	2-48	2-174
Fuel filter maintenance	3-10	3-13
Fuel tank servicing	3-21	3-26
G		
General cleaning instructions (table 2-1)		2-61
General information		1-1
General lubricating instructions under unusual conditions	3-3	3-1
General lubrication instructions	3-2	3-1
General service data (table 1-3)		1-24
Gunner's platform operation	2-56	2-190
H		
Hand receipt manual	1-3	1-2
Heater operating instructions, troop/cargo winterization	2-41	2-164
Heater operation (All except A2 vehicles)	2-19	2-119
Heater operation (A2 vehicles)	2-20	2-120
Heating, ventilation, and air-conditioning air intake filter service	3-27	3-34
Heavy variant cargo/troop carriers (M1097, M1097A1, M1097A2, and M1123)	1-10	1-6
Heavy variant stowage plan	F-11	F-22
Hydraulic winch operation	2-26.1	2-134.2
L		
2-litter ambulance, armored (M996 and M996A1); 4-litter ambulance armored (M997, M997A1, and M997A2)	1-16	1-18
2-litter ambulance, soft top (M1035, M1035A1, and M1035A2)	1-17	1-20
Light bulb replacement, ambulance interior	3-28	3-38
Light switch, operation of vehicle	2-13	2-112
Litter rack operation, ambulance	2-62	2-202
Litter rack operation, soft top ambulance (M1035, M1035A1, and M1035A2)	2-58	2-191
Lubrication for continued operation below 0°F (-18°C)	3-4	3-1
Lubrication instructions	3-1	3-1
Lubrication instructions		G-1
Lubrication instructions, general	3-2	3-1
Lubrication instructions under unusual conditions, general	3-3	3-1
Lubrication requirements	2-7	2-63
M		
Maintenance forms and records	1-2	1-2
Max tool kit stowage operation	2-22.1	2-124.1
Maximum vehicle operating speeds (3L80) (table 1-11)		1-29
Maximum vehicle operating speeds (4L80-E) (table 1-12)		1-29
Metric system	1-8	1-3
Mirror adjustment, rearview (vehicle serial number 99,999 and below)	3-24	3-31

INDEX

	Para.	Page
M (Cont'd)		
Mirror adjustment, rearview (vehicle serial number 100,000 and above)	3-25	3-32
Miscellaneous publications	A-7	A-2
Mud, operating in	2-33	2-142
N		
NBC system operation, ambulance	2-63	2-212
O		
On-vehicle equipment loading plans, appendix F		F-1
Operating in dusty, sandy areas	2-32	2-141
Operating in extreme cold, on ice, or snow	2-31	2-140
Operating in extreme heat	2-34	2-143
Operating in mud	2-33	2-142
Operating in rainy or humid conditions	2-35	2-144
Operating on unusual terrain	2-29	2-138
Operation of vehicle light switch	2-13	2-112
Operator's controls and indicators, description and use of		2-1
P		
Parking brake adjustment and cleaning	3-13	3-17
Pioneer tool stowage rack operation	2-22	2-122
Placing vehicle in motion	2-11	2-108
Plastic window cleaning	3-18	3-23
Power steering fluid servicing	3-20	3-25
Preventive maintenance checks and services (PMCS)	2-5	2-62
R		
Rainy or humid conditions, operating in	2-35	2-144
Raising and securing hood	3-8	3-10
Rearview mirror adjustment (vehicle serial number 99,999 and below)	3-24	3-31
Rearview mirror adjustment (vehicle series number 100,000 and above)	3-25	3-32
References, appendix A		A-1
Removal and installation of cargo barrier and net	2-51.1	2-182.2
Removal and installation of cargo barrier extension	2-51	2-182
Removal and installation of four-man cargo area soft top enclosure	2-49	2-178
Removal and installation of four-man crew area soft top and arctic soft top enclosures	2-48	2-174
Removal and installation of S250 shelter carrier rear suspension tiedown kit	2-50	2-180
Removal and installation of soft top ambulance (M1035, M1035A1, and M1035A2) enclosure	2-59	2-193
Removal and installation of troop area soft top enclosures	2-47	2-172
Removal and installation of two-man crew area soft top enclosure	2-46	2-168
Reporting equipment improvement recommendations (EIR)	1-4	1-2

INDEX

	Para.	Page
R (Cont'd)		
Restraining net installation	3-29	3-40
Runflat operations	2-38	2-156
Runflat operation (table 2-4)		2-156
S		
Scope of manual	1-1	1-1
Seatbelt operation	2-16	2-116
Service data, general (table 1-3)		1-24
Servicing batteries	3-11	3-14
Servicing coolant surge tank	3-9	3-12
Servicing windshield washer reservoir	3-14	3-18
Shallow water fording operation	2-36	2-145
Slave starting operation	2-23	2-125
Soft top ambulance (M1035, M1035A1, and M1035A2) enclosure, removal and installation of	2-59	2-193
Soft top ambulance (M1035, M1035A1, and M1035A2) litter rack operation	2-58	2-191
Special instructions	2-28	2-137
Starting the engine	2-10	2-105
Step assembly operation, rear, ambulance	2-60	2-197
Stopping the vehicle and engine	2-12	2-110
Stowage and sign guide, appendix E		E-1
S250 shelter carriers (M1037 and M1042)	1-15	1-16
S250 shelter carrier rear suspension tiedown kit, removal and installation of	2-50	2-180
T		
Tables:		
1-1. Differences Between Models		1-22
1-2. Capacities		1-23
1-3. General Service Data		1-24
1-4. Engine Data (6.2 L)		1-25
1-5. Engine Data (6.5 L)		1-25
1-6. Cooling System Data		1-25
1-7. Transmission Data (3L80)		1-26
1-8. Transmission Data (4L80-E)		1-26
1-9. Transfer Case Data (218)		1-27
1-10. Transfer Case Data (242)		1-28
1-11. Maximum Vehicle Operating Speeds (3L80 Transmission)		1-29
1-12. Maximum Vehicle Operating Speeds (4L80-E Transmission)		1-29
1-13. Vehicle Dimensions (All except M1123 and A2 Vehicles)		1-30
1-14. Vehicle Dimensions (M1123 and A2 Vehicles)		1-31
1-15. Vehicle Cruising Range		1-32
1-16. 6,000 lb Winch Data		1-33
1-17. 9,000 lb Winch Data (Optional)		1-33
1-17.1. 10,500 lb Winch Data (Optional)		1-33
1-18. Curb Weight		1-34
1-19. Vehicle Bridge Classification		1-34

INDEX

	Para.	Page
T (Cont'd)		
2-1. General Cleaning Instructions		2-61
2-2. Preventive Maintenance Checks and Services		2-62
2-3. Towing Operations		2-126
2-3.1 Vehicle Trailer Towing Requirements		2-132.2
2-4. Runflat Operations		2-156
3-1. Troubleshooting		3-3
3-2. Cleaning Compound-to-Water Ratio		3-18
Tabulated data (table 1-1)		1-22
Tailgate operation	2-21	2-121
Technical bulletins	A-6	A-2
Technical manuals	A-5	A-2
Tire chain installation and removal	3-22	3-28
TOW 2 carrier stowage plan		F-4
TOW/armament carrier operation		2-184
TOW carrier load plan	F-2	F-1
TOW carrier stowage plan		F-2
TOW carriers, armored (M966, M966A1, M1036, and M1121)	1-11	1-8
TOW carriers, w/supplemental armor (M1045, M1045A1, M1045A2, M1046, and M1046A1)	1-12	1-10
TOW weapon station operation	2-54	2-188
Towing operation	2-24	2-126
Towing operations (table 2-3)		2-126
Trailer towing	2-25	2-132.1
Trailer towing requirements, vehicle (table 2-3.1)		2-132.2
Transfer case data (218) (table 1-9)		1-27
Transfer case data (242) (table 1-10)		1-28
Transmission data (3L80) (table 1-7)		1-26
Transmission data (4L80-E) (table 1-8)		1-26
Transmission fluid servicing	3-19	3-24
Troop area soft top enclosures, removal and installation of	2-47	2-172
Troop/cargo winterization heater operating instructions	2-41	2-164
Troop seat kit operation	2-44	2-167
Troubleshooting (table 3-1)		3-3
Troubleshooting procedures	3-6	3-2
Two-man crew area soft top enclosure, removal and installation of	2-46	2-168
V		
Vehicle and engine, stopping the	2-12	2-110
Vehicle cruising range (table 1-15)		1-32
Vehicle dimensions (M1123 and A2 vehicles) (table 1-14)		1-31
Vehicle dimensions (All except M1123 and A2 vehicles) (table 1-13)		1-30
Vehicle light switch, operation of	2-13	2-112
Vehicle operating speeds, maximum (3L80 transmission) (table 1-11)		1-29
Vehicle operating speeds, maximum (4L80-E transmission) (table 1-12)		1-29

INDEX

	Para	Page
W (Cont'd)		
Weight, curb (table 1-18)		1-33
Wheel assembly replacement	3-26	3-33
Winch operation, electric	2-26	2-134
Winch operation, hydraulic	2-26.1	2-134.2 ■
Winch data, 9,000 lb (Optional) (table 1-17)		1-33
Winch data, 6,000 lb (table 1-16)		1-33
Winch data, 10,500 lb (Optional) (table 1-17.1)		1-33 ■
Windshield assembly operation	2-43	2-166
Windshield washer reservoir, servicing	3-14	3-18

By Order of the Secretary of the Army:

DENNIS J. REIMER
General, United States Army
Chief of Staff

Official:

YVONNE M. HARRISON
Administrative Assistant to the
Secretary of the Army
01393

By Order of the Secretary of the Air Force:

RONALD R. FOGLEMAN
General, United States Air Force
Chief of Staff

Official:

HENRY VICCELLIO, JR.
General, United States Air Force
Commander, Air Force Materiel Command

By Order of the Marine Corps:

D. R. BLOOMER
Colonel, USMC
Director, Program Support
Marine Corps Systems Command

DISTRIBUTION:
To be distributed in accordance with DA Form 12-38-E, block 0377, requirements for TM 9-2320-280-10.

☆ U.S. GOVERNMENT PRINTING OFFICE-1996-746-014/20194

RECOMMENDED CHANGES TO EQUIPMENT TECHNICAL PUBLICATIONS

THEN...JOT DOWN THE DOPE ABOUT IT ON THIS FORM. CAREFULLY TEAR IT OUT, FOLD IT AND DROP IT IN THE MAIL.

SOMETHING WRONG WITH PUBLICATION

FROM: (PRINT YOUR UNIT'S COMPLETE ADDRESS)

DATE SENT

PUBLICATION NUMBER	PUBLICATION DATE	PUBLICATION TITLE

BE EXACT PIN-POINT WHERE IT IS

PAGE NO.	PARA-GRAPH	FIGURE NO.	TABLE NO.

IN THIS SPACE, TELL WHAT IS WRONG AND WHAT SHOULD BE DONE ABOUT IT.

PRINTED NAME, GRADE OR TITLE AND TELEPHONE NUMBER	SIGN HERE

DA FORM 1 JUL 79 2028-2

PREVIOUS EDITIONS ARE OBSOLETE.

P.S.--IF YOUR OUTFIT WANTS TO KNOW ABOUT YOUR RECOMMENDATION MAKE A CARBON COPY OF THIS AND GIVE IT TO YOUR HEADQUARTERS.

THE METRIC SYSTEM AND EQUIVALENTS

LINEAR MEASURE

1 (Centimeter = 10 Millimeters = 001 Meters = 0.3937 Inches

1 Meter = 100 Centimeters = 1.000 Millimeters= 39.37 Inches

1 Kilometer = 1.000 Meters = 0.621 Mile

SQUARE MEASURE

1 Sq Centimeter = 100 Sq Millimeters = 0.155 Sq Inches

1 Sq Meter = 10.000 Sq Centimeters = 10.76 Sq Feet

1 Sq Kilometer = 1.000.000 Sq Meters = 0.386 Sq Miles

CUBIC MEASURE

1 Cu Centimeter = 1.000 Cu Millimeters 0.06 Cu Inches,

1 Cu Meter = 1.000.000 Cu Centimeters = 35.31 Cu Feet

LIQUID MEASURE

1 Milliliter = 0.001 liters = 0.0338 Fluid Ounce,

1 Liter = 1.000 Milliters = 33.82 Fluid Ounce,

TEMPERATURE

5/9 (°F -32) = °C

212° Fahrenheit is equivalent to 100° Celsius

90° Fahrenheit is equivalent to 32.2° Celsius

32° Fahrenheit is equivalent to 0° Celsius

9/5 C° +32 = F°

WEIGHTS

1 Gram = 0001 Kilograms 1.000 Milligrams = 0035 Ounces

1 Kilogram = 1.000 Grams = 2.2 Lb.

1 Metric Ton = 1.000 Kilograms = 1 Megagram = 1.1 Short Tons

APPROXIMATE CONVERSION FACTORS

TO CHANGE	TO	MULTIPLY BY
Inches	Centimeters	2.540
Feet	Meters	0.305
Yards	Meters	0.914
Mile	Kilometer	1.609
Square Inches	Square Centimeters	6.451
Square Feet	Square Meters	0.093
Square Yards	Square Meters	0.836
Square Miles	Square Kilometers	2.590
Acres	Square Hectometer	0.405
Cubic Feet	Cubic Meters	0.028
Cubic Yards	Cubic Meter	0.765
Fluid Ounces	Milliliter	29.573
Pints	Liters	0.473
Quarts	Liters	0.946
Gallons	Liters	3.785
Ounces	Grams	28.349
Pounds	Kilograms	0.454
Short Tons	Metric Tons	0.907
Pound-Feet	Newton-Meters	1.356
Pounds Per Square Inch	Kilopascal	6.895
Miles Per Gallon	Kilometers Per Liter	0.425
Miles Per Hour	Kilometers Per Hour	1.609
TO CHANGE	**TO**	**MULTIPLY BY**
Centimeters	Inches	0.394
Meters	Feet	3.280
Meters	Yards	1.094
Kilometers	Miles	0.621
Square Centimeters	Square Inches	0.155
Square Meters	Square Feet	10.764
Square Meters	Square Yards	1.196
Square Kilometers	Square Miles	0.386
Square Hectometers	Acres	2 471
Cubic Meters	Cubic Feet	35.315
Cubic Meters	Cubic Yards	1.308
Milliliters	Fluid Ounces	0.034
Liters	Pints	2.113
Liters	Quarts	1.057
Liters	Gallons	0.264
Grams	Ounces	0.035
Kilograms	Pounds	2.205
Metric Tons	Short Tons	1.102
Newton-Meters	Pound-Feet	0.738
Kilopascals	Pounds Per Square Inch	0.145
Kilometers Per Liter	Miles Per Gallon	2.354
Kilometers Per Hour	Miles Per Hour	0.621

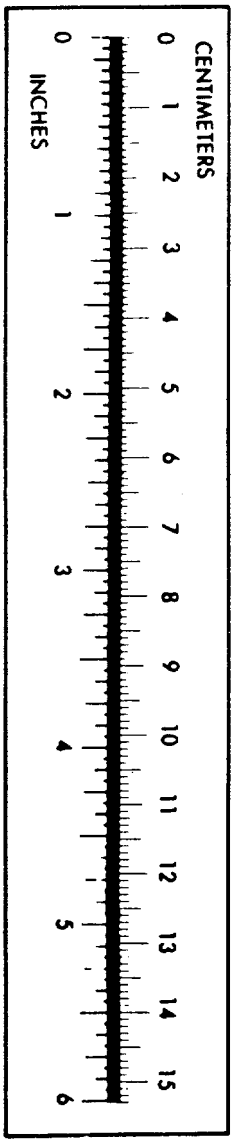

PIN: 058006-002