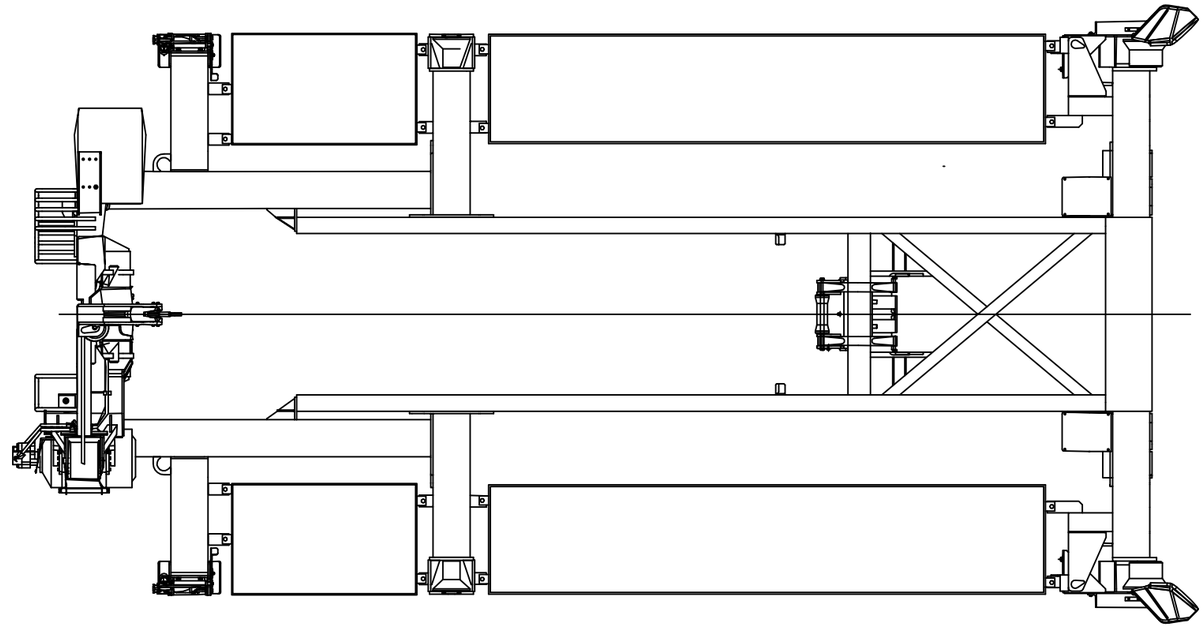

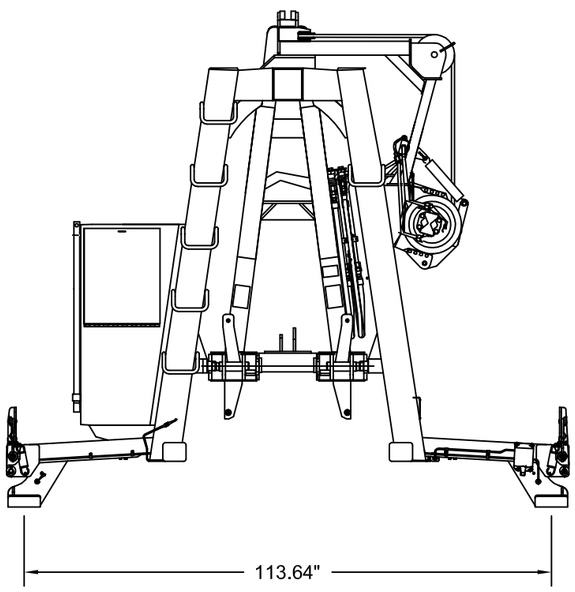

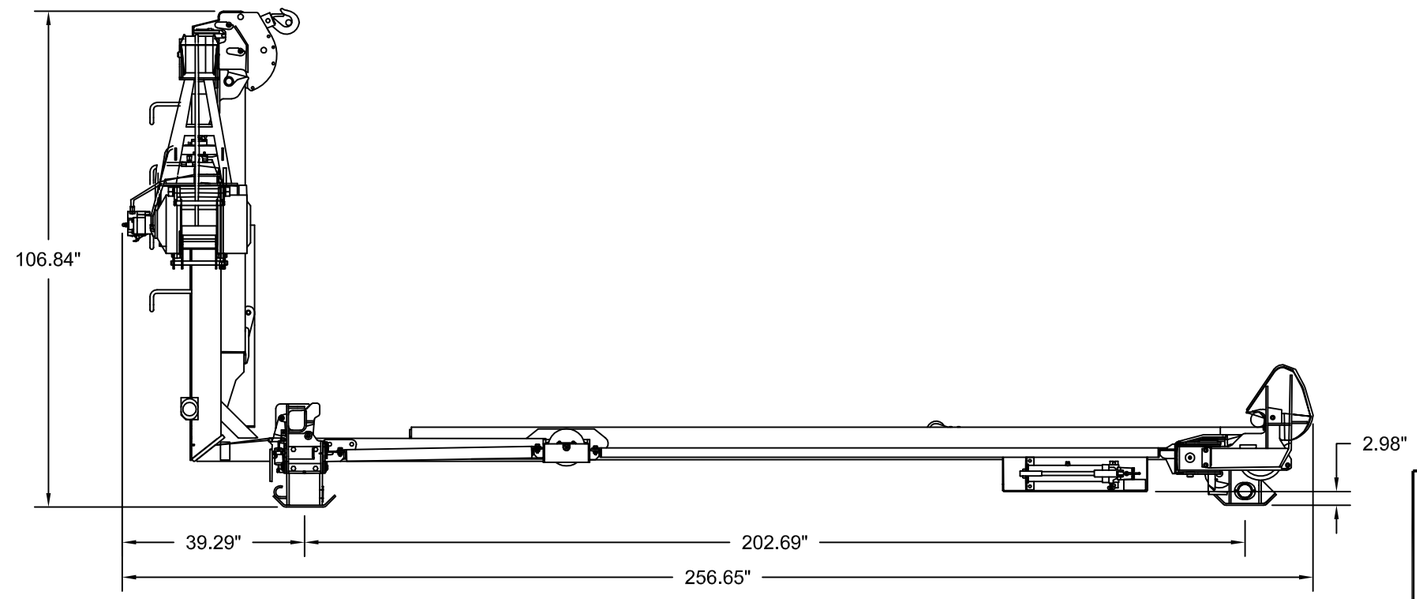

UNCLASSIFIED: Distribution A. - Approved for public release

UNLESS OTHERWISE SPECIFIED
1. BREAK ALL SHARP CORNERS 0.04 MAX
2. TOLERANCES: in.
0 PLACE DECIMALS ± 0.15
1 PLACE DECIMALS ± 0.08
2 PLACE DECIMALS ± 0.02
3 PLACE DECIMALS ± 0.004
DRILLED HOLE +.015/-.005
ANGULAR DIMENSIONS ±1°

3 √ INDICATES 125√
500 MAXIMUM FINISH REQUIRED ON SURFACES WITHOUT A SYMBOL.
4 ALL DIMENSIONS ENCLOSED IN BRACKETS [ ] REFLECT THE INCH VALUE IN MM.

	BY	DATE
DRAWN	MAP	
CHKD		
APPR		
APPR		

SCALE:

.DWG

G.T. MACHINING & FABRICATING LTD.
7 Kelwood Crescent, P.O. Box 128,
Napanee, Ontario, Canada, K7R 3M3
Telephone (613) 354-6621 Fax: (613) 354-3046
Home Page: www.g.t.machineandfab.com

Bridge Adaptor Pallet
Dimensional Data

CONTRACT NO.	DRAWING NO.	REV.
		00