August 13, 2004 1:37 PM

REVISIONS				
ZONE	LTR	DESCRIPTION	DATE	APPROVED
	D	SEE ECP NO. 80HE0402	27JUL82	[illegible]
	E	SEE ECP NO. 86HE3405 [illegible]	28July86	[illegible]
	G	SEE ECP NO. 86CE0723	22 Sep 86	[illegible]
	M	SEE ECP NO. 95HE3058	95-04-06	NDS

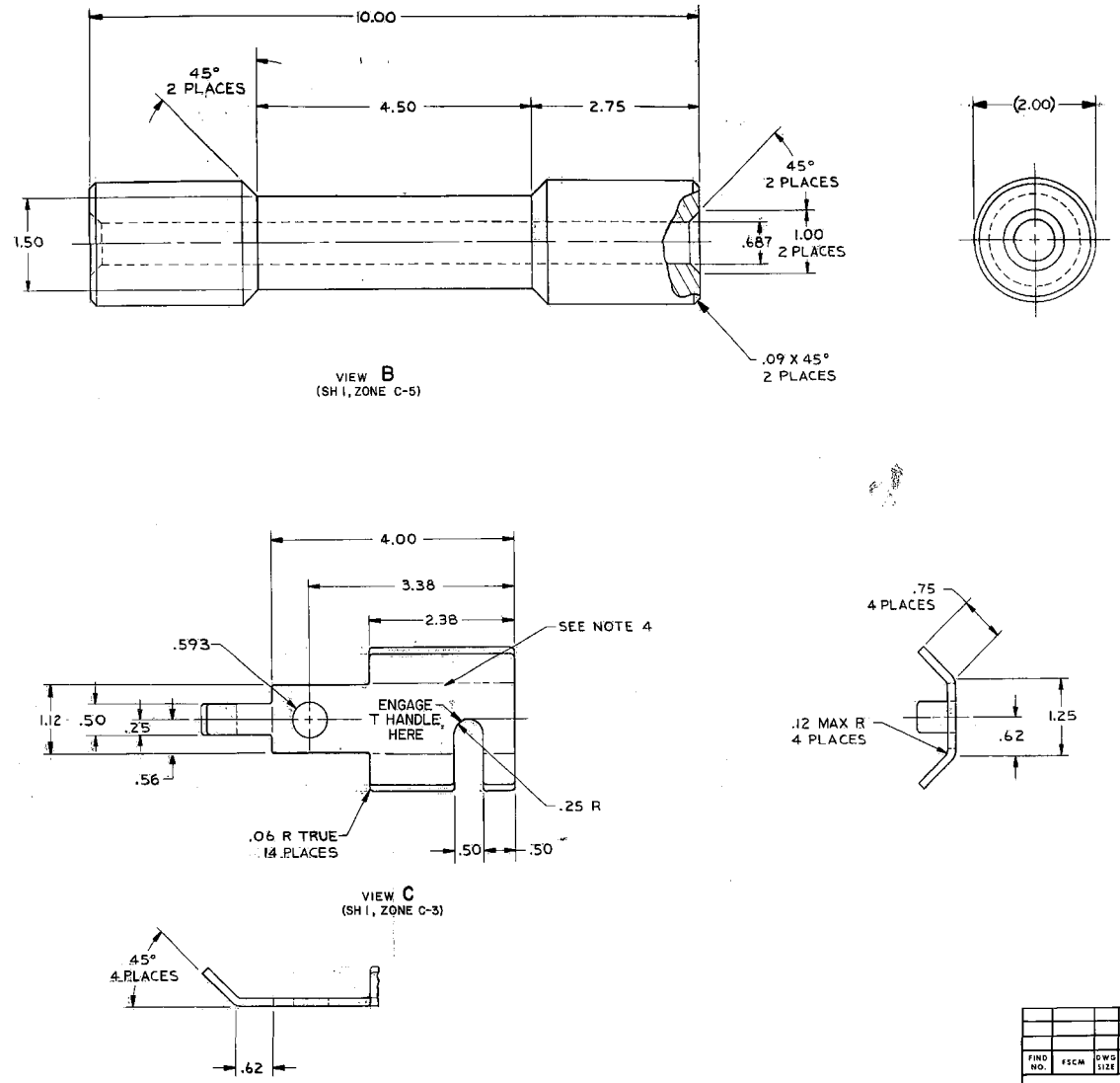

FIND NO.	FSCM	DWG SIZE	PART OR IDENTIFYING NO.	QTY REQD	NOMENCLATURE OR DESCRIPTION	SPECIFICATION	MATERIAL

PARTS LIST

UNLESS OTHERWISE SPECIFIED DIM/TOLERANCES ARE: ± IN.
ONE PLACE (.X) ±
TWO PLACE (.XX) ±
THREE PLACE (.XXX) ±
ANGLES ±
THIRD ANGLE PROJECTION

DO NOT SCALE THIS DRAWING
FOR INTERPRETATION OF DRAWING MIL-STD-100 APPLIES
REMOVE BURRS AND BREAK SHARP EDGES
SHARP EDGES TO
FILLET RADII TO
MATERIAL

DRAWN BY TMY — DATE 15 JUL 82
CHECKED BY Q.C. AFK RABM — 26 JUL 82
CONTRACT NO.
DESIGN APPROVAL [signature] DATE 27 JULY 1982
APPROVED FOR PROCUREMENT Martha Newman DATE 27 JULY 1982

U.S. ARMY MOBILITY EQUIPMENT
RESEARCH AND DEVELOPMENT COMMAND
FORT BELVOIR, VIRGINIA 22060

GROUND ROD

SIZE	FSCM	DWG NO.
A1	97403	13219E0462

SCALE — SHEET 2