SH			STATUS OF REVISIONS		
8	ZONE	LTR	DESCRIPTION	DATE	APPROVED
D		D	SEE ECP NO. 80HE0402	27JUL82	[illegible]
E		E	SEE ECP NO. 86HE3405	08Sep86	[illegible]
E		F	SEE ECP NO. 86CE0526	19SEP86	[illegible]
G		G	SEE ECP NO. 86CE0723	22SEP86	[illegible]
G		H	SEE ECP NO. 87CE3502	20JUL87	LCT
G		J	SEE ECP NO. 88CE0131	2MAR88	LCT
G		K	SEE ECP NO. 90HE0429	2JAN91	ABS
G		L	SEE ECP 92HE3157A1	26FEB92	DLR
M		M	SEE ECP NO. 95HE3058	95-04-06	ABS
M		N	SEE ECP NO. RAD-B1070	00-06-02	CRD

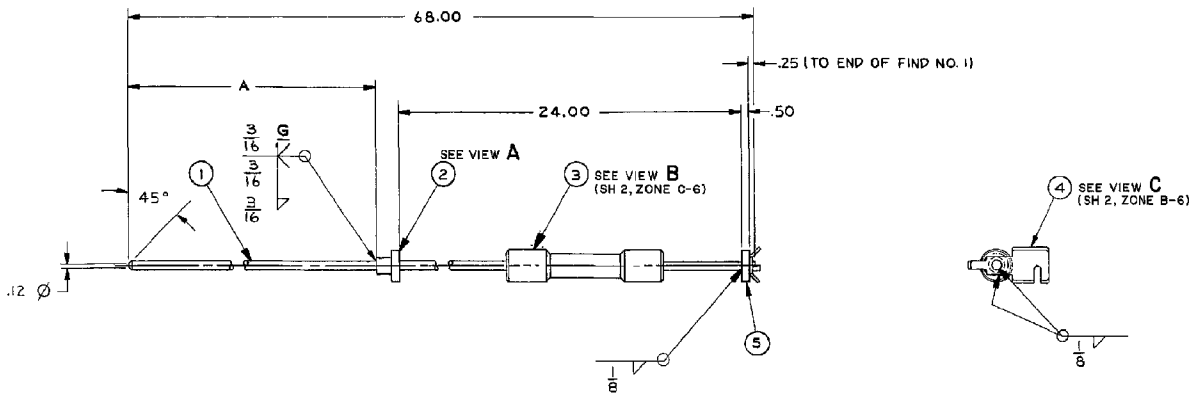

SCALE 1/4

NOTES:

1. FINISH SHALL BE COPPER PLATING IN ACCORDANCE WITH AMS 2418, 0.001 INCH THICK, MIN, EXCEPT PLATING ON LENGTH "A" SHALL BE 0.015 INCH, AND AS INDICATED IN NOTE 5.
2. WELD IN ACCORDANCE WITH APPLICABLE PARAGRAPHS OF AWS D1.1. VISUAL INSPECTION IS REQUIRED.
3. FIND NO. 3,OPTIONAL MATERIAL: ASTM A536 GRADE 65-45-12 MAY BE SUBSTITUTED FOR ASTM A576.
4. STAMP IN .16 HIGH CHARACTERS APPROXIMATELY WHERE SHOWN WITH SYMBOL IN ACCORDANCE WITH MIL-STD-130. FILL CHARACTERS AND SYMBOL WITH WHITE PAINT IN ACCORDANCE WITH TT-E-527.
5. BAR,FIND NO. 3,AND ALL WELDS SHALL BE CLEANED, TREATED AND PAINTED IN ACCORDANCE WITH MIL-STD-171, FINISH 5.2 AND 20.8, COLOR NO. 34094 OF FED-STD-595.

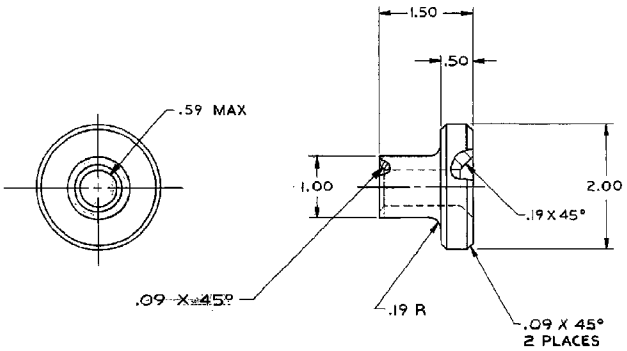

VIEW A

CURRENT DESIGN ACTIVITY CAGE CODE 19207
U. S. ARMY TANK AUTOMOTIVE AND
ARMAMENTS COMMAND
WARREN, MICHIGAN 48397-5000

DISTRIBUTION STATEMENT A.
APPROVED FOR PUBLIC RELEASE;
DISTRIBUTION IS UNLIMITED.

FIND NO.	FSCM	DWG SIZE	PART OR IDENTIFYING NO.	QTY REQD	NOMENCLATURE OR DESCRIPTION	SPECIFICATION	MATERIAL
5			GRADE 1018		BAR,RD,2.00 DIA STK	ASTM A576	STEEL
4			GRADE 36		SHEET,.179"STK	ASTM A570	STEEL
3			GRADE 1020		BAR,RD,2.00"DIA STK,SEE NOTE 3	ASTM A576	STEEL
2			GRADE 1018		BAR,RD,2.00" DIA STK	ASTM A576	STEEL
1			GRADE 1020		ROD,.562 DIA STK	ASTM A576	STEEL

PARTS LIST

UNLESS OTHERWISE SPECIFIED DIM/TOLERANCES ARE: pat IN.
ONE PLACE (.X) ± —
TWO PLACE (.XX) ± .03
THREE PLACE (.XXX) ± .015
ANGLES ± 2°
THIRD ANGLE PROJECTION

DO NOT SCALE THIS DRAWING
FOR INTERPRETATION OF DRAWING MIL-STD-100 APPLIES
REMOVE BURRS AND BREAK SHARP EDGES
SHARP EDGES — TO —
FILLET RADIE — TO —
MATERIAL

DRAWN BY TMY DATE 14 JUL 82
CHECKED BY Q.C. AFK RAPM 26JUL 82
CONTRACT NO.
DESIGN APPROVAL
DATE 27 JULY 1982
APPROVED FOR PROCUREMENT
DATE 27 JULY 1982

U.S. ARMY MOBILITY EQUIPMENT
RESEARCH AND DEVELOPMENT COMMAND
FORT BELVOIR, VIRGINIA 22060

GROUND ROD

SIZE	FSCM	DWG NO.
A1	97403	13219E0462

SCALE 1/1 SHEET 1 OF 2