1 MATERIAL 303 STAINLESS STEEL ASTM A-582

2. PASSIVATE PER ASTM A967

3. MARK PER MIL-STD-130, 03002A008, MFR CAGE CODE

REVISIONS				
ZONE	REV.	DESCRIPTION	DATE	APPROVED

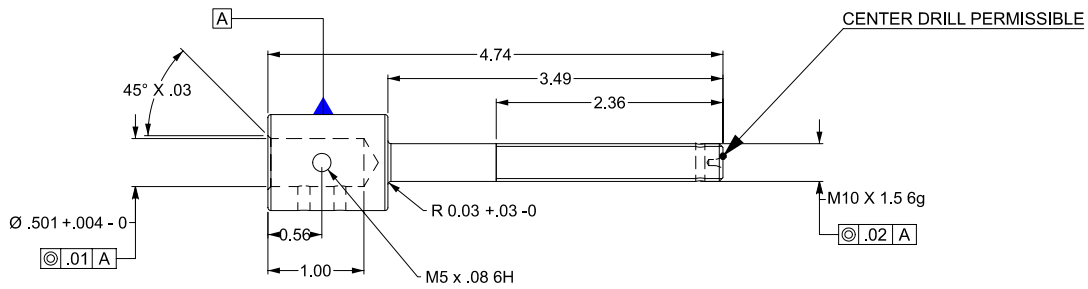

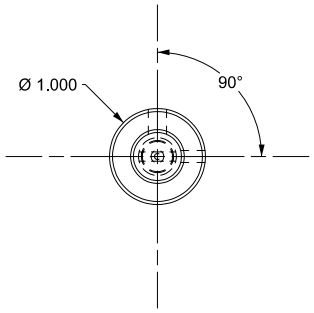

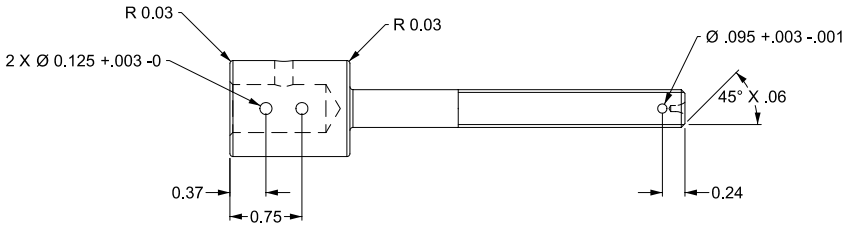

SUGGESTED SOURCE OF SUPPLY
TBR INC.
13670 HALLOON LN.
PATASKALA, OH 43062
CAGE 004T5

		DO NOT SCALE DRAWING	DR RL	DATE 05-06-2003	DEPARTMENT OF THE NAVY UNITED STATES MARINE CORPS
		FOR INTERPRETATION OF DRAWING MIL-STD-100 APPLIES	CHK		
		REMOVE BURRS AND BREAK SHARP EDGES	ENGR R. LOTT	05-06-2003	TITLE STUD, REPLACEMENT
		UNLESS OTHERWISE SPECIFIED DIMENSIONS ARE IN INCHES	APPD		
12314756	LAV-FOV	ONE PLACE(.X) ±	CONTR NO. DAAE07-03-P-N172		SIZE C / CAGEC 01365 / DWG NO. 03002A008 / REV.
NEXT ASSY	USED ON	TWO PLACES(.XX) ± .01			
APPLICATION		THREE PLACES(.XXX) ± .005	DSGN ACTIVITY APPROVAL		
		ANGLES ± 3			
FOR INTERPRETATION OF DIMENSIONING AND TOLERANCING SEE ANSI Y 14.5M		MATERIAL	APPROVED		SCALE / WEIGHT / SHEET 1 OF 1