APPENDIX C

This appendix contains a summary of all of the standard DCA tests. All of these tests were generated using the generic test descriptions from Appendix B.

Table C-1. STE/ICE-R Control and Confidence Tests

Test Select Number	Test	Test Description
		CONTROL FUNCTIONS
01	Interleave RPM	Alternatively displays engine RPM and a second parameter
02	Minimum Value	Displays minimum value detected for next test
03	Maximum Value Test	Displays maximum value detected for next
04	Peak-to-Peak Value	Displays Peak-to-Peak value for next test
05	SI Full Power Simulation	Allows evaluation of next selected test on SI engine under full power fuel flow conditions
06	Interleave Two Tests	
		ID ENTRY TESTS
56	Cycle Entry	Permits entry of number of engine cycles
57	Cycle Display	Displays number of cycles entered
58	Number of Cylinder Entry	Permits entry of number of engine cylinders
59	Number of Cylinder Display	Displays number of cylinders entered
60	VID Entry	Permits entry of two digit Vehicle Identification Number (VID). The VID designates engine specific pre-programmed constants for power tests, compression unbalance, and first peak tests
61	VID Display	Displays the VID number entered
62	DCA ID Display	Reads the vehicle's code resistor and displays the corresponding DCA number. The code resistor selects proper gains, filters, and conversion constants for test applicable to that DCA.
		CONFIDENCE TEST
66	Confidence Test	Provides an overall check of the VTM. Displays PASS, FAIL, and fault isolation error messages to assist in DS maintenance.

Table C-2. STE/ICE-R Tests - DCAs 1 - 10

Test Select Number	Test	Test Description and Application	DCA Test Pins	DCA'S	Measurement Range
		ENGINE TESTS			
10	Engine RPM (AVE)	Measures average speed of engine crankshaft using Point signal on SI Engine. Pulse Tachometer on CI Engine. Also used to measure cranking speed on CI engine with fuel shut off, i.e., must have means to stop fuel when engine start switch is on.	H,J c,d	10 1 - 9	50 - 5000RPM
11	Engine RPM, Cranking SI only	Test 11 is only used for measuring cranking RPM. Performed with ignition ON. Automatically inhibits spark plug firing allowing cranking without starting. On CI engines, cranking tests are run using Test 10 with the fuel shut off.	H,J	10	50 - 1500RPM
12	Power Test (RPM/SEC)	Measures engine's power producing potential in units of RPM/SEC. Used when programmed engine constants and corresponding Vehicle Identification Number (VID) have not been established.	H,J c,d	10 1 - 9	500 - 3500RPM/s
13	Power Test (% Power)	Measures percentage of engine's power producing potential compared to full power of a new engine.	H,J c,d	10 1 - 9	TBD TBD
14	Compression Unbalance (%)	Evaluates relative cylinder compression and displays percent difference between the highest and the lowest compression values in an engine cycle. Applicable to SI and CI engines for which VIDs and engine constants have been established.	V,W	1- 10	0 - 90%

153

Table C-2. STE/ICE-R Tests - DCAs 1 - 10 (Continued)

Test Select Number	Test	Test Description and Application	DCA Test Pins	DCAs	Measurement Range
		IGNITION TESTS			
16	Dwell Angle (TDC)	Measures number of degrees that the points are closed.	H,J	10	10 - 72 @2000RPM
17	Points Voltage (VDC)	Measures voltage drop across the points (points positive to battery return).	H,J	10	0 - 2VDC
18	Coil Primary	Measures voltage available at the coil positive terminal of the operating condition of the coil.	L,W	10	0 - 32VDC
		FUEL/AIR SYSTEM TESTS			
23	Fuel Supply Pressure (psi)		AA,AB	10	0 - 100psi
24	Fuel Supply Pressure (psi)	This test measures the outlet pressure of the fuel pump.	u,v	10 4,9 1,2,5-7 3,8	0 - 10psi 0 - 30psi 0 - 100psi 0 - 300psi
25	Fuel Return Pressure (psi)	Measures return pressure to detect return line blockage, leaks, or insufficient restrictor back pressure.	AC,AD	1,2,6,7	0 - 100psi
26	Fuel Filter Pressure Drop (PASS/FAIL)	Detects clogging via opening of a differential pressure switch across the secondary fuel filter. Switch point of DCA standard differential pressure switch will be 13.6 psid unless otherwise designated by vehicle manufacturer.	s,t	1 - 10	PASS/FAIL

154

Table C-2. STE/ICE-R Tests - DCAs 1 - 10 (Continued)

Test Select Number	Test	Test Description and Application	DCA Test Pins	DCAs	Measurement Range
27	Fuel Solenoid Voltage (VDC)	Measures the voltage present at the fuel shutoff solenoid positive terminal.	R,M	1 - 9	0 - 32VDC
28	Air Cleaner Pressure Drop (RIGHT) (In H20)	Measures suction vacuum in air intake after the air cleaner relative to ambient air pressure to detect extent of air cleaner clogging.	AA,AB	1 - 9	0 - 60in. H2O
29	Air Cleaner Pressure Drop (LEFT) (In H20)	Second air cleaner on dual intake systems.	AC,AD	5	0 - 60in. H2O
30	Turbocharger Outlet Pressure (RIGHT) (In Hg)	Measures discharge pressure of the turbocharger.	w,x	1,3-6,8,9	0 - 50in. Hg
31	Turbocharger Outlet Pressure (LEFT) (In Hg)	Second turbocharger on dual intake systems.	y,z	5,10	0 - 50in. Hg
32	Airbox Pressure (In Hg)	Measures the airbox pressure of two stroke engines. This measurement is useful in detecting air induction path obstructions or leaks.	y,z	2,7 1,6	0 - 20in. Hg 0 - 50in. Hg
33	Intake Manifold Vacuum (In Hg)	Spark ignition engine intake system evaluation.	w,x	10	0 - 30in. Hg
34	Intake Manifold Vacuum Variation (In Hg)				
		LUBRICATION/COOLING SYSTEM TESTS			
35	Engine Oil Pressure (psi)	Self-explanatory	y,z	3,4,8,9	0 - 100psi

55

Table C-2. STE/ICE-R - DCAs 1 - 10 (Continued)

Test Select Number	Test	Test Description and Application	DCA Test Pins	DCAs	Measurement Range
36	Engine Oil Filter P	Measures the pressure drop across the engine oil filter as indicator of filter element clogging.	AC,AD	3,4,8,9	0 - 25psi
37	Engine Oil Temperature (oF)	Primarily applicable to air cooled engines. Requires transducer output shorting switch on vehicle to perform system zero offset test.	k,m	1 - 9	120 - 300deg F
38	Engine Coolant Temperature (F)	Transducer output shorting switch on vehicle required.	n,p	1-4,6-10	120 - 300deg F
		STARTING/CHARGING SYSTEM TESTS			
67	Battery Voltage (VDC)	Measure battery voltage at or near battery terminals.	V,W	1 - 10	0 - 32 VDC
68	Starter Motor Voltage (VDC)	Measures the voltage present at the starter motor positive terminal.	T,W	1 - 10	0 - 32 VDC
69	Starter Negative Cable Voltage Drop (VDC)	Measures voltage drop on starter path. A high voltage indicates excessive ground path resistance.	M,W	1 - 10	0 - 2 VDC
70	Starter Solenoid Volts (VDC)	Measures voltage present at the starter solenoid's positive terminal. Measures current through battery ground path shunt.	S,M	1 - 10	0 - 32 VDC
71	Starter Current, Average (amps)	Self-explanatory	X,Y	1 - 4,10 5 - 9	0 - 1000A 0 - 2000A

Table C-2. STE/ICE-R Tests - DCAs 1 - 10 (Continued)

Test Select Number	Test	Test Description and Application	DCA Test Pins	DCAs	Measurement Range
72	Starter Current First Peak (Peak Amps, DC)	Provides a good overall assessment of complete starting system. Tests condition of the starting circuit and battery's ability to deliver starting current. The measurement is made at the moment the starter is engaged and prior to armature movement. Peak currents less than nominal indicate relatively high resistance caused by poor connections, faulty wiring, or low battery voltage.	X,Y V,W	1 - 4,10 5 - 9	0 - 1000A 0 - 2000A
73	Battery Internal Resistance (Milliohms)	Evaluate battery condition by measuring battery voltage and current simultaneously.	X,Y V,W	1 - 10	0 - 999.9mohm
74	Starter Circuit Resistance (Milliohms)	Measures the combined resistance of the starter circuit internal to the batteries.	X,Y V,W	1 - 10	0 - 999.9mohm
75	Battery Resistance Change (Milliohms/sec)	Measures rate of change of battery resistance as an indicator of battery condition.	X,Y V,W	1 - 10	0 - 999.9mohm/s
80	Battery Current	Measures current to or from the battery.	X,Y	1-4,10 5 - 9	-999 - 1000A -999 - 2000A
81	Battery Electrolyte Level (PASS/FAIL)	Determines whether electrolyte in the sensed cell is of sufficient level (i.e., in contact with electrolyte probe).	z,a, b,M	1 - 10	PASS/FAIL
82	Alternator/Generator Output Voltage (VDC)	Self-explanatory	N,W	1 - 10	0 - 32 VDC

152

Table C-2. STE/ICE-R Tests - DCAs 1 - 10 (Continued)

Test Select Number	Test	Test Description and Application	DCA Test Pins	DCAs	Measurement Range
83	Alternator/Generator Field Voltage (VDC)	Measures voltage present at alternator/generator field windings.	O,M	1 - 10	0 - 32 VDC
84	Alternator/Generator Negative Cable Voltage Drop (VDC)	Measures voltage drop in ground cable and connection between alternator/generator ground terminal and battery negative terminal.	W,P	1 - 10	0 - 2 VDC
85	Alternator Output Current Sense (VAC-RMS)	Measures voltage output at the current transformer in 650 ampere alternator.	n,p	5	0 - 3 VAC
86	Alternator AC Voltage Sense (VAC-RMS)	Measures alternator output voltage.	L,W	5	0 - 22 VAC
87	Frequency	Measures frequency in the range 0 - 3200 Hz. Typical uses include measuring the frequency of a generator.	L,W	1-4,6-9	0 - 3200HZ
98	Generic DC Voltage	Measures DC voltages with respect to battery ground (PIN W). Uses include measuring the voltage of an additional battery.	L,W	1-4,6-9	0 - 32 VDC
99	Generic AC Voltage	Measures AC voltage in the range 0 - 21 volts AC.	L,W	1-4,6-9	0 - 21 VAC

58

TABLE C-3 STE/ICE-R TESTS DCAs 11 - 13

TEST NUMBER	TEST	TEST DESCRIPTIONS	DCA TEST PINS	DCAs	Measurement Range
01-06	Control Function	See TABLE A-1		11-13	
56-62,66	Confidence/ID Entry	See TABLE C-2		11-13	
		ENGINE MEASUREMENTS			
10	Engine RPM		c-d	11-13	50 - 1500 RPM
12	Power Test(RPM/SEC)	See TABLE C-2	c-d	11-13	500 - 3500 RPM/SEC
13	Power Test(%)		v-w	11-13	TBD
14	Compression Unbalance		L-W	11-13	0 - 90%
		VOLTAGE MEASUREMENTS			
18	Coil Primary Voltage(VDC)	Measures differential	L-W	13	0 - 32 VDC
27	Voltage Test #1	voltages of electrical	R-M	11-13	0 - 32 VDC
67	#2	test points on the vehicle	V-M	11-13	0 - 32 VDC
68	#3	referenced to engine	T-W	11-13	0 - 32 VDC
70	#4	ground (Pin M) or Battery	S-M	11-13	0 - 32 VDC
82	#5	negative (Pin W).	N-W	11-13	0 - 32 VDC
83	#6		O-M	11-13	0 - 32 VDC
69	Ground Reference Voltage		M-W	11-13	0 - 2 VDC
98	Generic DC Voltage		L-W	11-13	0 - 32 VDC
99	Generic AC Voltage		L-W	11-13	0 - 21 VAC
		TEMPERATURE MEASUREMENTS			
21	Temperature	Measure Temps. in the	X-Y	11-12	0 - 1000 deg F
22	Temperature	range 0 - 1000 F via a	AC-AD	11-12	0 - 1000 deg F
37	Temperature #1	differential input 0-100mV	R-M	11-13	120 - 300 deg F
38	Temperature #2		k-m	11-13	120 - 300 deg F
		PRESSURE MEASUREMENTS			
39	Pressure Test #1	Measures Pressures in the	u-v	11-13	0 - 300 psi
40	#2	range 0 - 10,000 psi.Trans-	w-x	11,13	0 - 9999 psi
		ducer ranges and outputs		12	0 - 5 psi
41	#3	per Individual DCAs 11-13	y-z	11,13	0 - 9999 psi
				12	0 - 100 psi
42	#4		AC-AB	11	0 - 300 psi
				12	0 - 25 psi
				13	0 - 10 psi
43	#5		AC-AD	13	0 - 25 psi
44	#6		X-Y	13	0 - 100 psi
81	Electrolyte Level	See TABLE C-2	z,a,b-M	11-13	FAIL < 1.76 V
87	Frequency		L-W	11-13	0 - 3200 Hz

159

Table C-4. STE/ICE-R Tests - Tranducer Kit Mode

Test Number	Test	Description/Application
01 - 06	Control Functions	See Table C-1
10	Engine RPM (Average)	Engine Tests
11	Engine RPM (Cranking - SI)	
12	Power Test RPM/SEC	
13	Power Test % Power	
14	Compression Unbalance % (Power Cable)	
15	Compression Unbalance % (Test Probe Cable)	
16	Dwell Angle TDC	
17	Points Angle Volts	
45	Vacuum (0 - 30 in Hg)	
46	Vacuum Variation (0 - 30 in Hg)	
47	Pressure (0 - 50 in Hg)	Turbocharger and airbox pressures.(1)
48	Pressure Drop (0 - 150 in Water)	Suction Vacuum in air intake after air cleaners or intake filters.(1)
49	Pressure (0 - 25 psi)	Fuel supply pressure on SI (Spark Ignition) Engines.
50	Pressure (0 - 1,000 psig)	Pressures in lubrication, fuel, compressed air, power steering or automatic transmissions.(2)
51	Pressure (0 - 10,000 psig)	Hydraulic System Pressure.(3)
52	Temperature (0 - 300°F)	
53	High Temperature (0 - 1,000°F)	
58	Number of Cylinders Entry	Permits entry of number of engine cylinders.
59	Number of Cylinders Display	Primarily used when testing a vehicle not having a Vehicle Identification Number (VID).
60	VID Entry	See Table C-1
61	VID Display	
63	Transducer ID No. 1	Identifies Transducers connected to Test/Channels 1 and 2.
64	Transducer ID No. 2	

(1)Test uses -15 to +25 psig TK Tränsducer (12258877)
(2)Test uses 1,000 psig TK Pressure Transducer (12258876)
(3)Test uses 10,000 psig Pressure Transducer (12258956), available as a supplemental ite

Table C-4. STE/ICE-R Tests - Tranducer Kit Mode (Cont.)

Test Number	Test	Description/Application
65	VRS Placement Test	
66	Confidence Test	
72 & 76	Starter Current First Peak (amps)	Starting and charging system tests. Measurements made through power cable or test probe cable.
73 & 77	Internal Battery Resistance (mOhms)	
74 & 78	Starting Circuit Resistance (mOhms)	
75 & 79	Battery Resistance Change (mOhms/sec)	
88	Live Circuit Low ohms	Enables VTM to measure resistance in the range 0 - 10 ohms in a live circuit with high current. Allows for the testing of field circuits in a charging system.
89	DC Voltage (0 - 45.0 Volts)	Enables VTM use as a DC voltmeter. The measurements are automatically ranged through three voltage ranges: 0 - 0.5V, 0 - 4.5V, and 0 - 45 Vdc.
90	DC Current (0 - 1,500 Amps)	Enables VTM use as a DC ammeter using the TK clamp-on current probe. The ammeter is automatically ranged through three current ranges: 0 - 20 amps, 0 - 150 amps, and 0 - 1,500 amps dc.
91	0 - 4,500 Ohms	Enables VTM use as an ohm meter in the range 0 - 4,500 ohms for resistance and/or continuity tests.
92	0 - 40K Ohms	Enables VTM use as an ohm meter in the range 0 - 40,000 ohms. The test value is displayed in thousands of ohms (0.00 - 40.0).
93	AC Voltage (0 - 35 Volts)	Enables VTM use as an AC voltmeter. ~~Measurements are~~ automatically ranged through three voltage ranges: 0 - 0.5V, 0 - 3.5V and 0 - 35.0 Vac.
94	AC High Voltage (0 - 500 Volts)	Enables VTM use as an ac voltmeter in the range of 0 - 500V.
95	AC Current (0 - 700 Amps)	Enables VTM use as an AC ammeter. Measurements are automatically ranged through three current ranges: 0 - 10 Amps, 0 - 70 Amps and 0 - 700 Amps ac.

161

Table C-4. STE/ICE-R Tests - Tranducer Kit Mode (Cont.)

Test Number	Test	Description/Application
96	AC Frequency (40 - 500 Hz)	Enables frequency measurements using the test probe cable.
97	AC Frequency (40 - 500 Hz)	Enables frequency measurements using the current probe.

APPENDIX D

This appendix contains a pin by pin description of all vehicle connections. This appendix can be used in conjunction with Appendix A-3 to determine vehicle connections.

Table D-1. Component and Test Point Location

Pin No.	Function	Vehicle Connection/Remarks
A	No Connection	
B	No Connection	
C	No Connection	
D	DCA Indicator	See Chapter 4.
E	VTM Power (+)	Battery Positive Terminal: Electrical connection at terminal/cable clamp.
F	VTM Power (-)	Battery Ground: Electrical connection at termination of battery negative cable on hull, chassis or on engine block. Ground shield at or near diagnostic connector. See Figure D-1. Note: Use of twisted pair shielded cable is recommended for pins E and F together.
G	No Connection	
H	Points	Ignition Points, Positive Side
J	Points Return	Ignition Points Ground — See Figure D-2 for electrical connection
K	Points Shield	
L	User Selectable	Frequency DC Voltage — Vehicle connections as needed. AC Voltage
L	Coil Primary	Coil Primary, Positive Terminal — SI Engines.
M	Engine/Starter Ground	Electrical connection to Starter Ground terminal on the starter. If ~~starter does not have a ground~~ terminal, connect to starter mounting bolt. See Figure D-3.
N	Alt/Gen Output	Electrical connection to ALT/GEN Positive Terminal. On alternators with separate tectifiers (M113A1) connect to +DC output from rectifier.
O	Alt/Gen Field	Electrical connection ALT/GEN Field Positive Terminal close to alternator.
P	Alt/Gen Ground	Electrical connection at ALT/GEN housing or ground cable terminal.

164

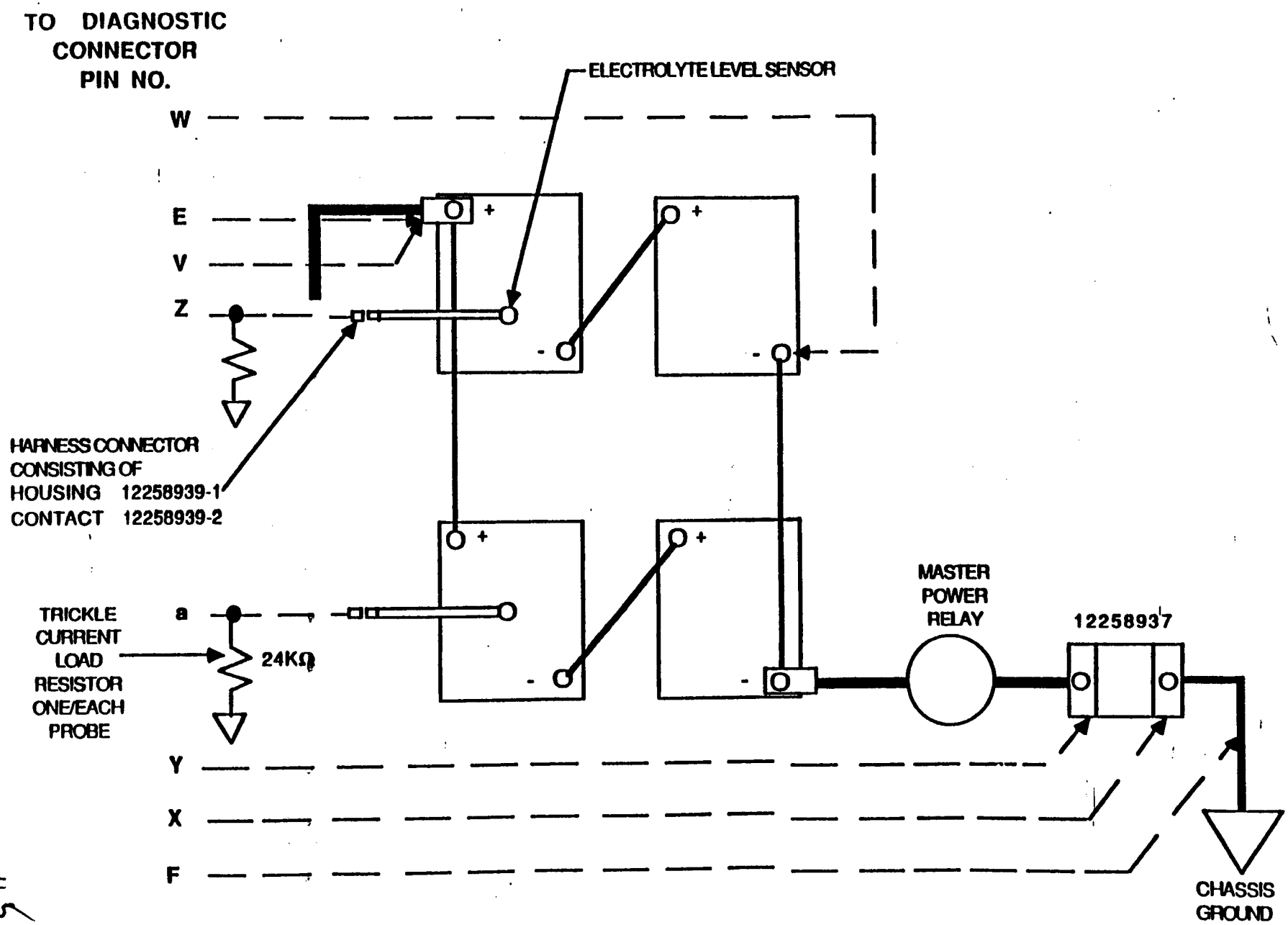

FIGURE D1-A. TYPICAL BATTERY CONNECTIONS WITH NEGATIVE MASTER POWER RELAY

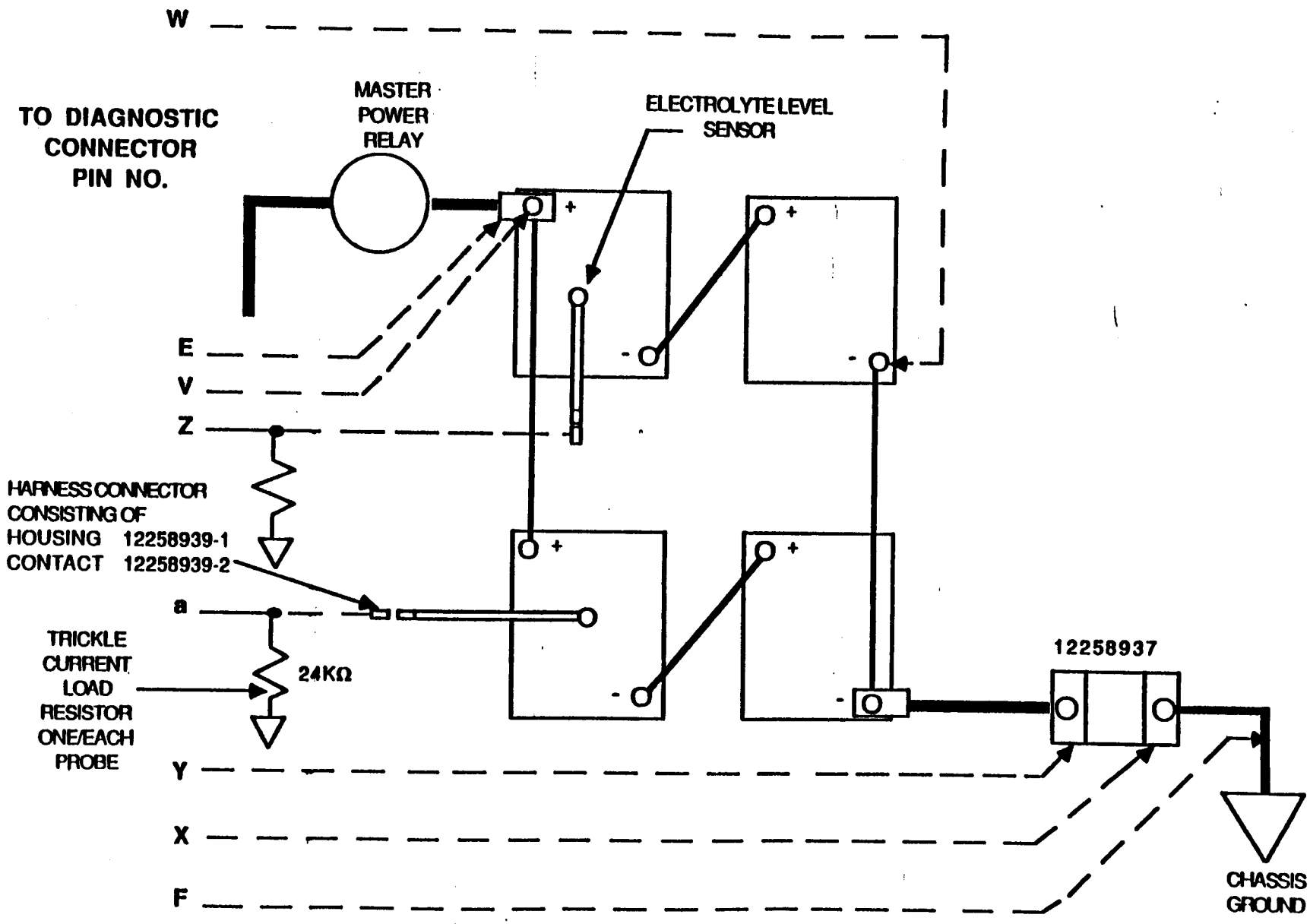

FIGURE D1-B. TYPICAL BATTERY CONNECTIONS WITH POSITIVE MASTER POWER RELAY

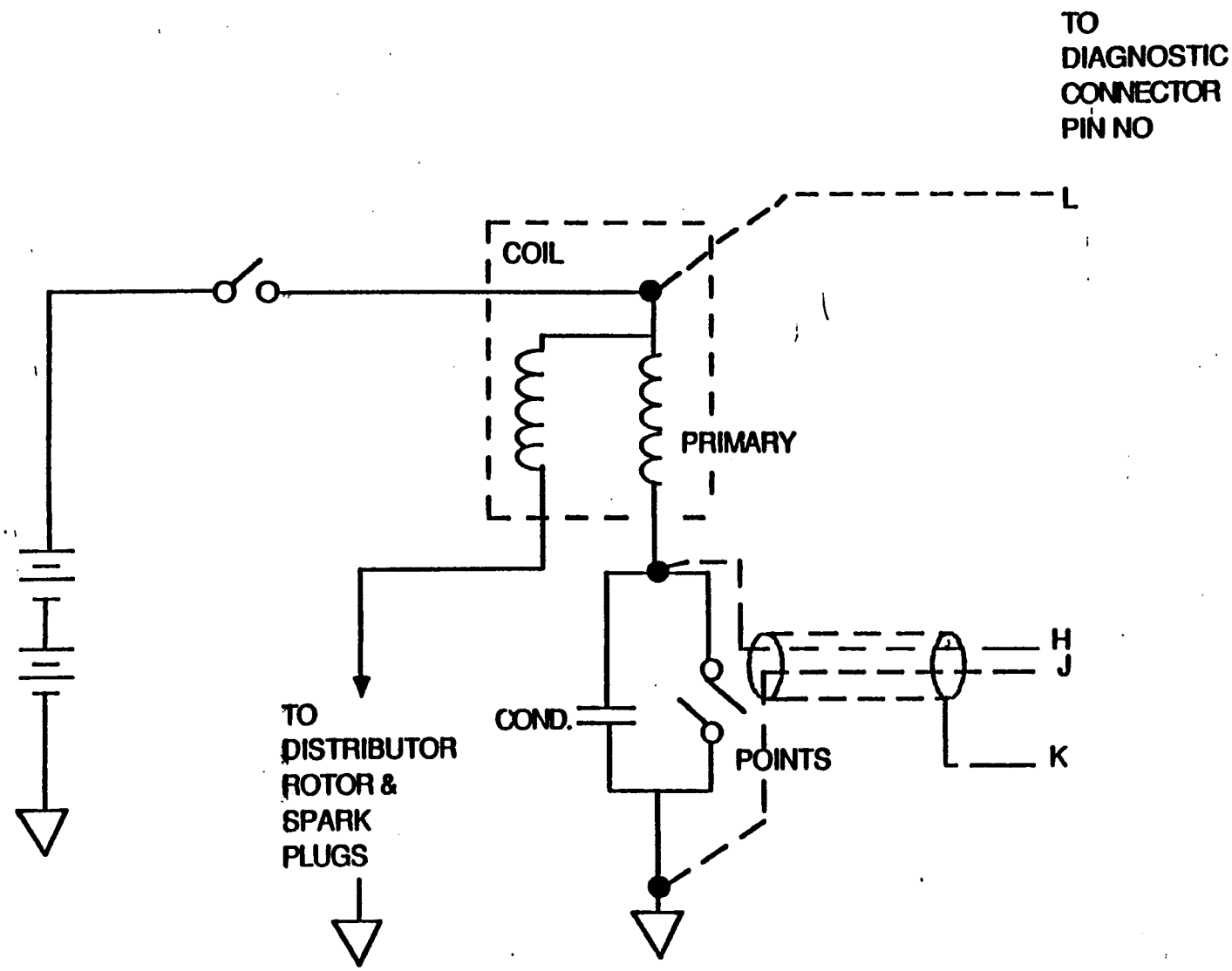

FIGURE D-2. IGNITION SYSTEM CONNECTIONS (Typical for M151A2)

167

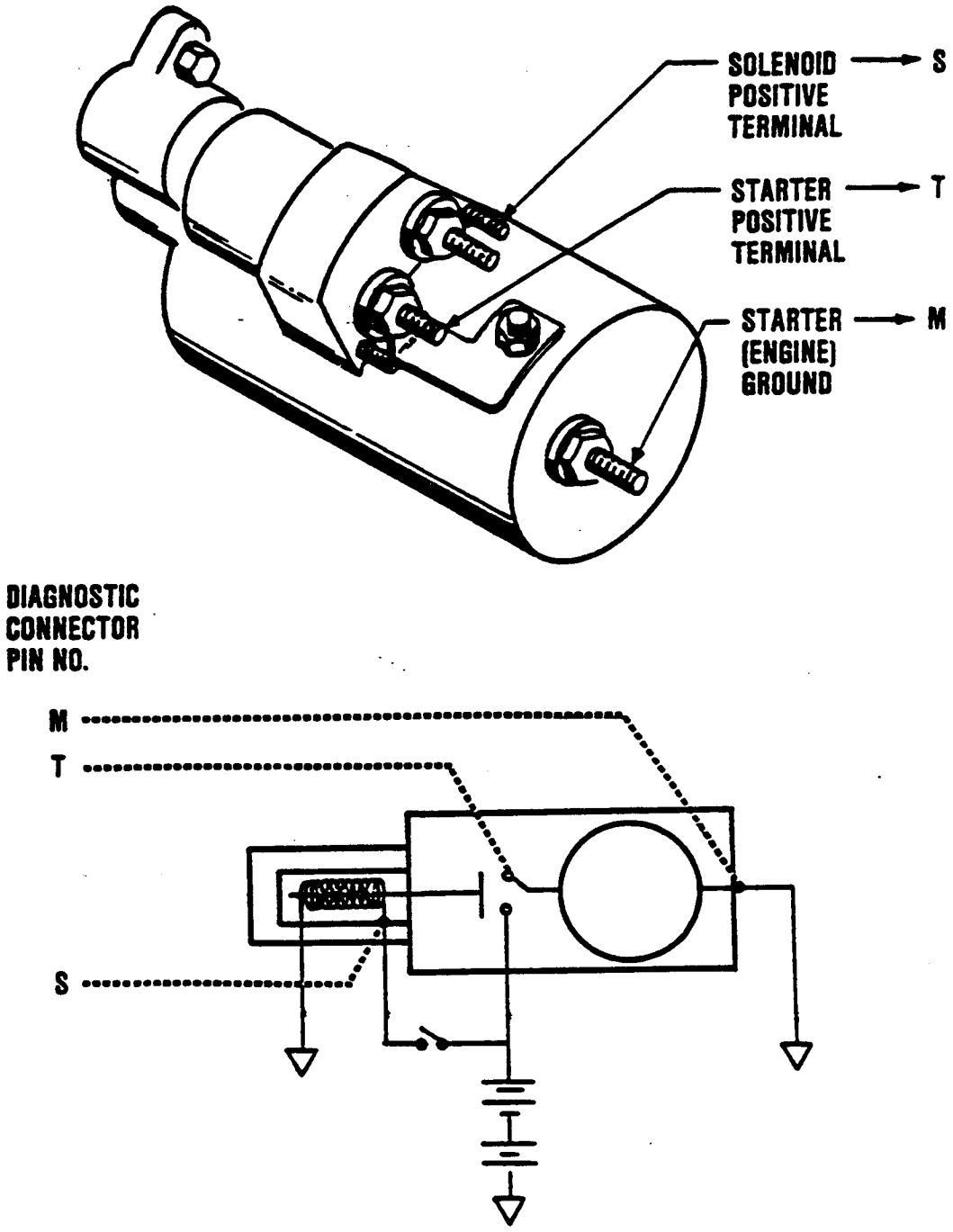

FIGURE D-3. STARTER/ENGINE GROUND CONNECTIONS

Table D-1. Component and Test Point Location (Cont.)

Pin No.	Function	Vehicle Connection/Remarks
R	Fuel Solenoid Volts	Electrical connection at fuel solenoid positive terminal or wire splice in vehicle circuit adjacent to the the solenoid.
S	Starter Volts	Electrical Connection at solenoid coil positive Solenoid terminal. The connection is at the solenoid closest to the starter armature. It is usually part of the starter assembly but is remotely located on some vehicles. See Figure D-3.
T	Starter Volts	Electrical connection at Starter armature positive terminal. See Figure D-3.
U	"No Sensor"	See Chapter 4.3.
V	Battery Voltage (+)	Electrical connection at Battery Positive Terminal/Cable Clamp. Note that this is the same connection as 'E' but requires a separate wire to the positive terminal. See Figure D-1.
W	Battery	Electrical connection at Battery Negative Voltage (-) Terminal/Cable Clamp. See Figure D-1.
X,Y	Battery/Starter Current	Electrical connections to voltage terminals of current shunt in negative battery cable. See Figure D-1.
Z, a,b	Electrolyte Level	Install Electrolyte Level Sensor in one of the middle cells of the battery, preferably the most positive battery of a series pair. Harness connection to the sensor is through a one-pin connector. Install a 24K ohm resistor between the DCA electrolyte wire and battery ground for each electrolyte level sensor. If there are less than three series pair of batteries, connect Pin b, or Pin a and b to Z at the Diagnostic Connector. See Figure D-1.
c d	CI Engine Speed	Pulse Tachometer 12258931-1 is a double ended unit for vehicles with mechanical instrument panel tachometers. The preferred mounting location is at the tachometer adapter at the engine. For other locations, the flexible drive shaft can be segmented such that the pulse tachometer can be clamped securely at a location relatively close to the engine takeoff. See Figure D-4. 12258931-2 is a single ended unit for vehicles with electrical instrument panel tachometers and is installed at the engine drive for mechanical tachometers. A standard tachometer drive adapter may be required.

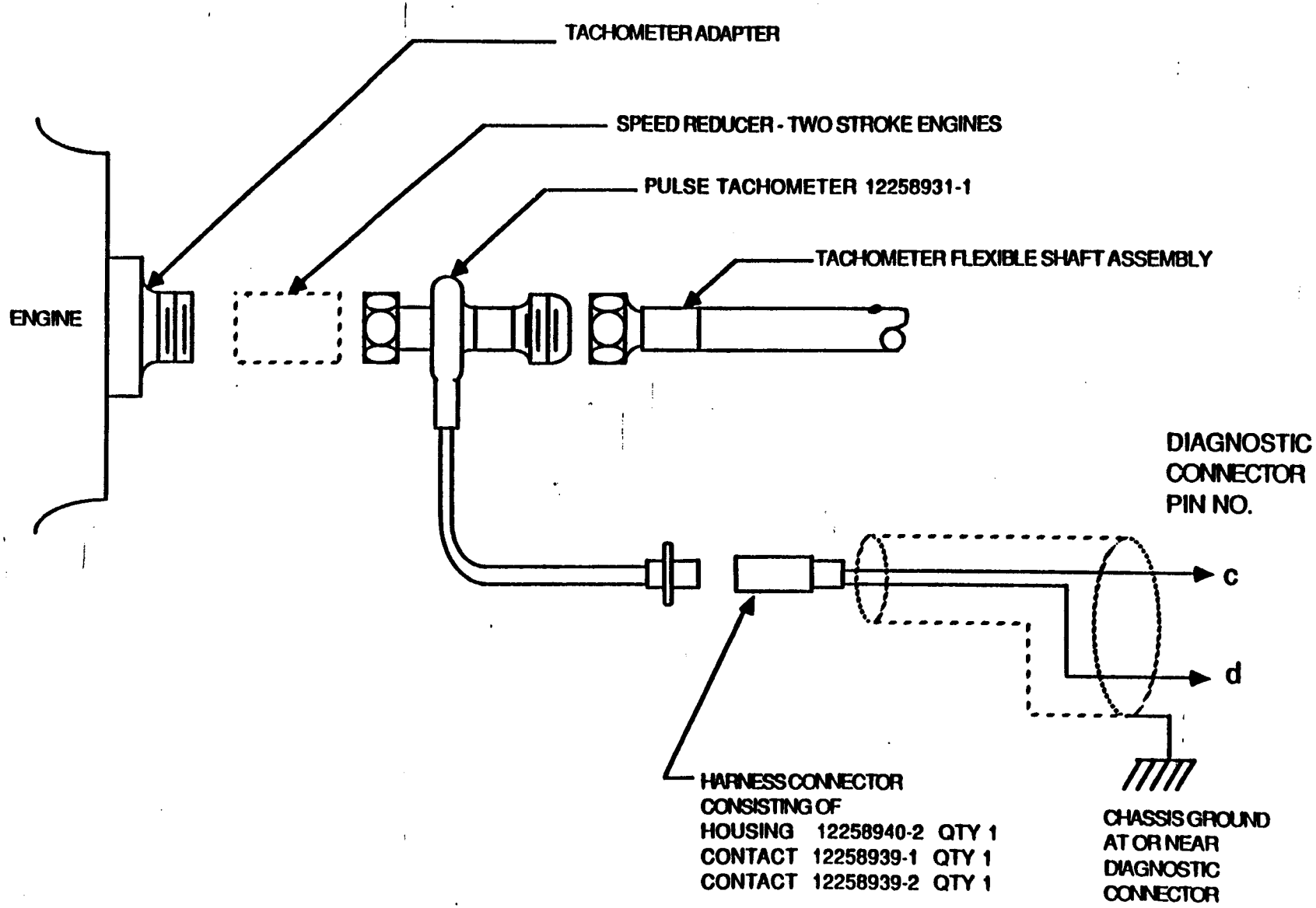

FIGURE D-4. CI ENGINE SPEED

Table D-1. Component and Test Point Location (Cont.)

Pin No.	Function	Vehicle Connection/Remarks
		The normal engine take-off is at the camshaft, providing one pulse per crankshaft revolution on four stroke engines. On two stroke engines the tachometer should be installed after the speed reducer such that the tachometer output will be one pulse per crankshaft revolution. The harness mating to either Pulse Tachometer is through a two pin ITT Cannon Sure Seal Connector.
e	No Connection	Use shielded wire for tachometer connection. Float the shield at the Sure-Seal connector. Connect other end of shield to vehicle chassis ground near the Diagnostic Connector.
f,g	Transducer Excitation and Return	Parallel distribution to bridge type transducers. Connections at transducers are made through a four contact ITT Cannon Sure-Seal Receptacle.
h,j	Code Resistor and Return	Appropriate resistor may be mounted anywhere. Recommended mounting is near the Diagnostic Connector where the Code resistor, DCA Indicator, and "No Sensor" resistors may be grouped.
k,m	Engine Oil Temperature	Install Temperature Sensor 12258933 in engine oil gallery. Location varies with engine and manufacturer. If block must be tapped, installation should be similar to standard SAEJ655 for a SAE Number 1 gage. Tapped hole should be a 1/4-18 DRYSEAL NPTF. See Figure D-5.
n,p	Coolant Temperature	Install in engine block ahead of thermostat. Minimum installation requirements similar to Engine Oil sensor.
q,r	No Connection	
s,t	Fuel Filter P	Install Differential Pressure Switch 12258938 across the secondary fuel filter(s) located between the fuel pump and ~~and the injectors or distributor pump.~~ Connect input port of pressure switch to a "TEE" in inlet side of filter. Connect output port to a "TEE" in outlet side of filter. Harness connector is a two contact ITT Cannon Sure-Seal Receptacle consisting of: Housing 12258940-2 Contact 12258939-1 Contact 12258939-2 See Figure D-6 and D-7

171

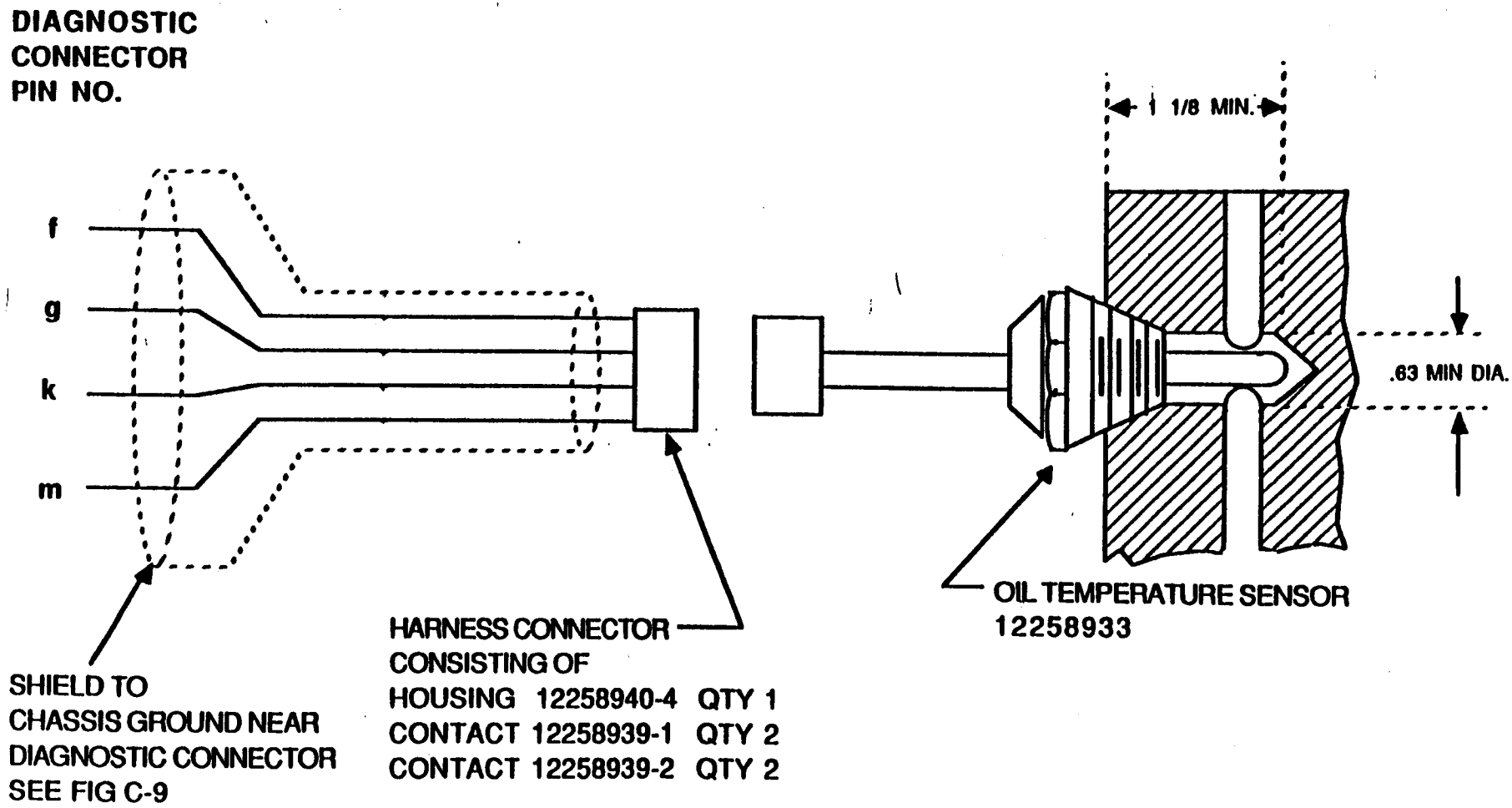

FIGURE D-5. ENGINE OIL TEMPERATURE

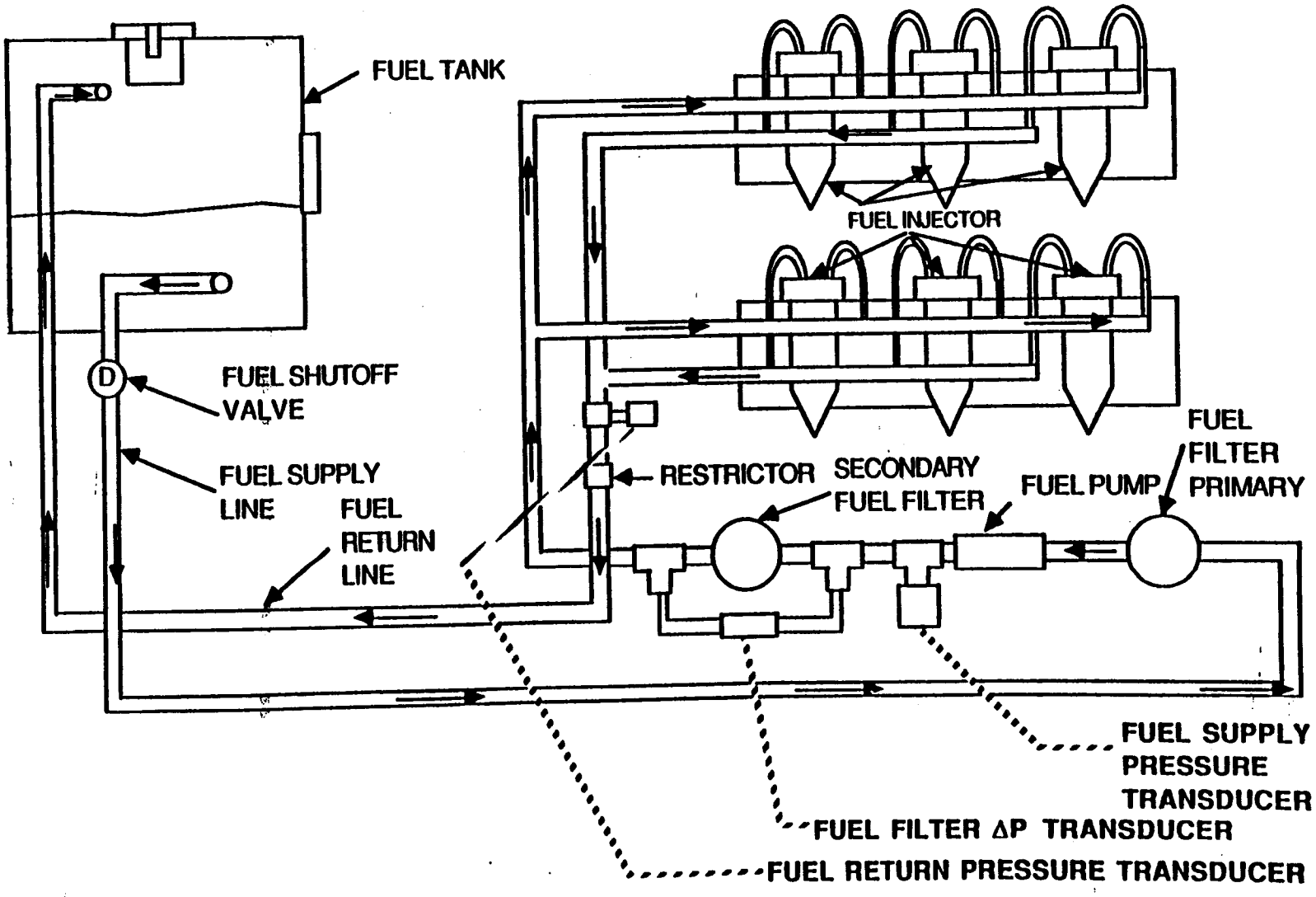

FIGURE D-6. UNIT INJECTOR FUEL SYSTEM

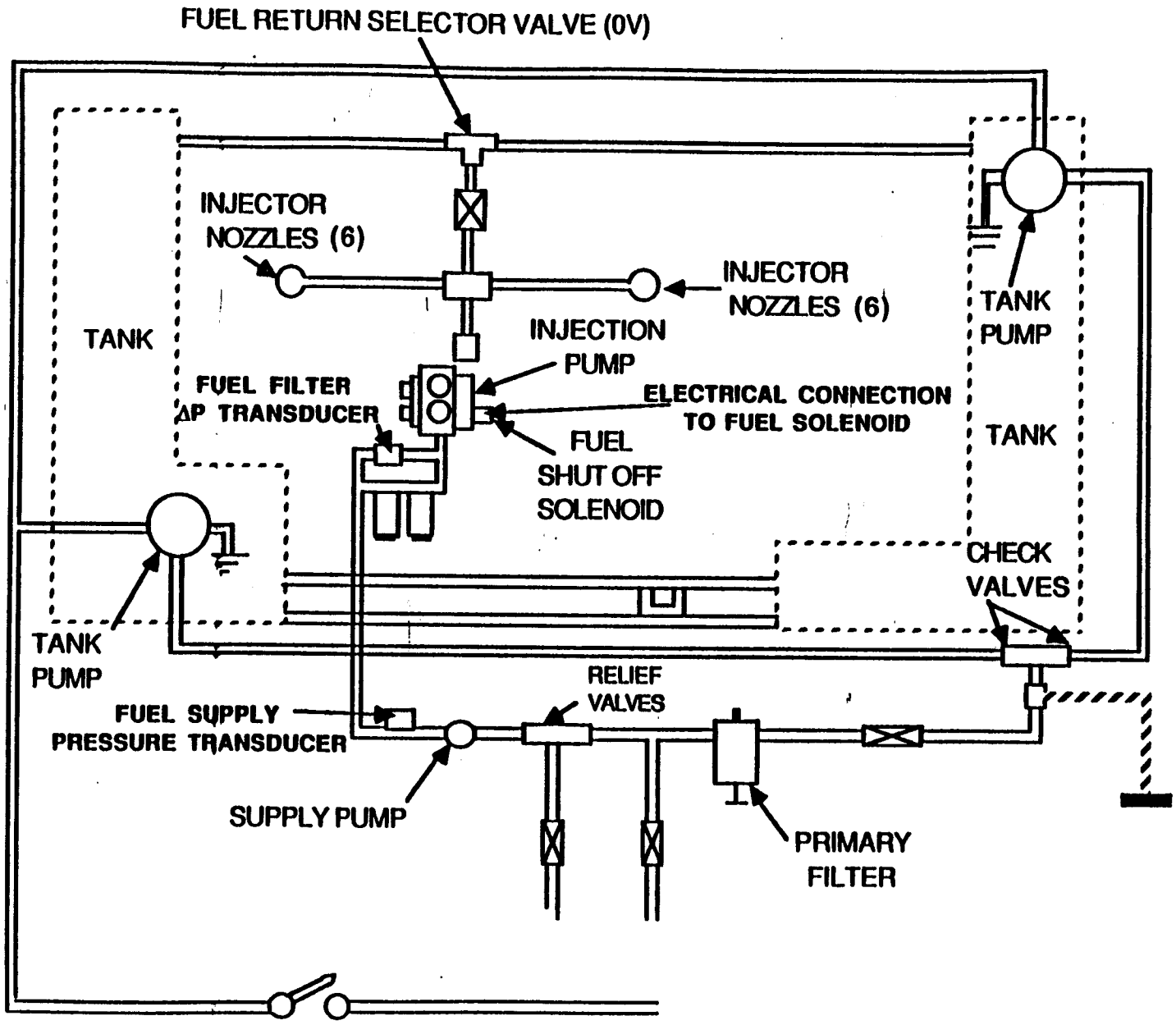

FIGURE D-7. DISTRIBUTOR PUMP TYPE FUEL SYSTEM

124

Table D-1. Component and Test Point Location (Cont.)

Pin No.	Function	Vehicle Connection/Remarks
u,v	Fuel Supply Pressure	Install in "TEE" in fuel line after fuel pump. Harness connector is a four contact ITT Cannon Sure-Seal receptacle consisting of: Housing 12258940-4 Contact 12258939-1 Quantity 2 Contact 12258939-2 Quantity 2 See Figures D-6 and D-7
w,x, y,z	Turbocharger Outlet Pressure CI Engine	Tap 1/4-18 NPT into turbocharger housing or intake manifold downstream of turbocharger outlet. If a manifold pressure tap exists in the intake manifold, insure that it is not downstream of the flame heater. See Figure D-8. Harness connector is four contact Sure-Seal Receptacle.
w,x	Manifold Vacuum SI Engines	Intake manifold normally has a tapped access hole. Install a snubber 12258881 between manifold and the -15 psig pressure transducer per 12258932-1. Harness connector is four contact Sure-Seal Receptacle.
y,z	Air Box Pressure Two stroke CI Engine	Install appropriate transducer per 12258932 into tapped access hole in engine block. Adaptive fittings may be required to accommodate thread size or space limitations. Harness connector is four contact Sure-Seal Receptacle.
y,z	Oil Pressure	Install pressure transducer into existing or tapped hole into engine block oil gallery. Comments for (y,z) above apply.
AA, AB, AC, AD	Air Cleaner P	Install pressure transducer 12258932-2 after air filter element in air cleaner housing or air intake ducting. Harness connector is a four contact Sure-Seal Receptacle. See Figure D-9.
AC, AD	Fuel Return Pressure	Install pressure transducer in "TEE" in fuel return line line before the restrictor. On some engines, the fuel restrictor may have to be relocated downstream to accommodate this installation. Harness connector is a four contact Sure-Seal Receptacle. See Figure D-6.
AC, AD	Oil Filter P	Install multipoint differential pressure switch 12258934 across oil filter. Installation similar to fuel filter P. However, harness connector is four contact Sure-Seal Receptacle.

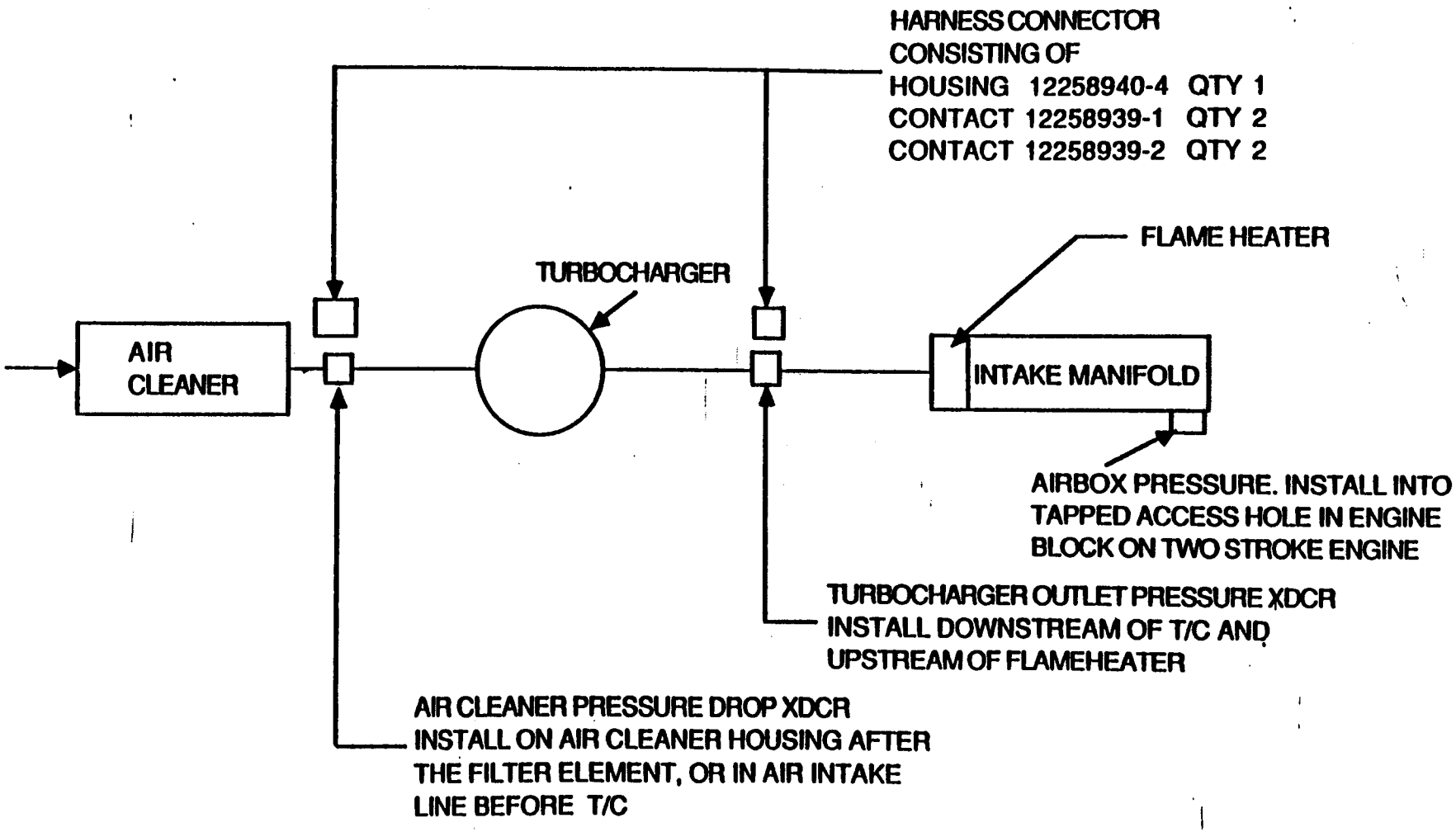

FIGURE D-8. AIR INTAKE SYSTEM

176

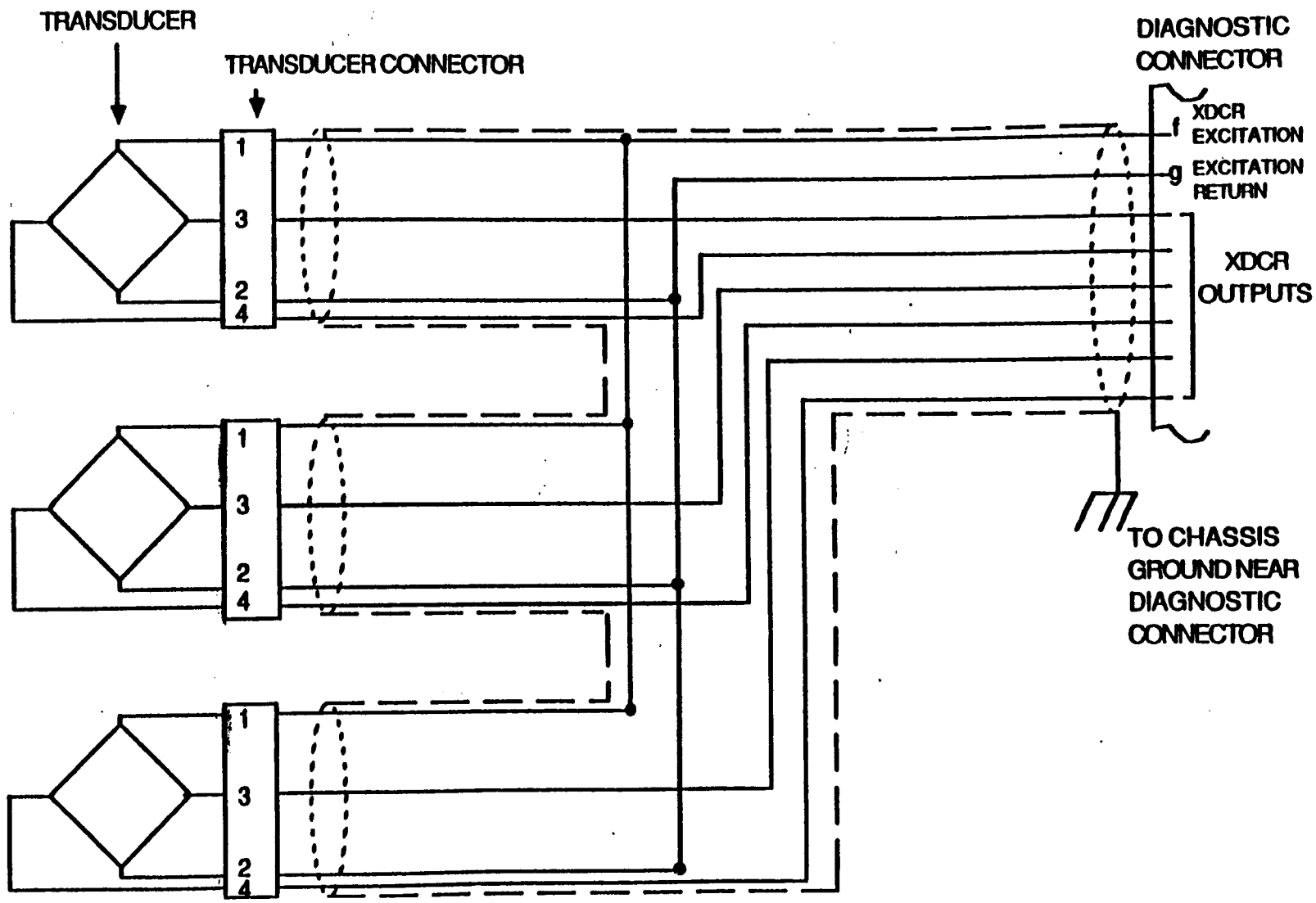

FIGURE D-9. TRANSDUCER SHIELDING

177

Table D-1. Component and Test Point Location (Cont.)

Pin No.	Function	Vehicle Connection/Remarks	
AE	SAE Data Bus	J1708(+)	For further information contact
AF	SAE Data Bus	J1708(-)	TACOM AMSTA-RVD.
AG	No Connection	Transducer Shield - See Figure D-9.	

APPENDIX E
LIST OF SUPPORTING DOCUMENTS

1.	TM 9-4910-571-12&P	Operator's Organizational Maintenance Manual Including Repair Parts and Special Tool List, Simplified Test Equipment for Internal Combustion Engines - Reprogrammable (STE/ICE-R).
2.	TM 9-4910-571-34&P	Direct Support and General Support Maintenance Manual Including Spare Parts and Special Tool List, Simplified Test Equipment for Internal Combustion Engines - Reprogrammable (STE/ICE-R).
3.	Commanding General's Policy Memorandum No. 11-85	Diagnostic Connector Assembly Implementation into TACOM Controlled Vehicles for Interface with Tank-Automotive Systems.
4.	MIL-T-62314A(AT)	Military Specification for Test Equipment (Simplified for Internal Combustion Engine - Reprogrammable (STE/ICE-R).
5.	DRDTA-P-702-101	Handbook for Preparation and Maintenance of Quality Assurance Requirements (QARs).

APPENDIX F
ABBREVIATIONS AND ACRONYMS

AC	Alternating Current
ALT(alt)	Alternator
AMP(amp)	Amperes
AWG	American Wire Gauge
C	Celcius
CAL	Prompting Message on VTM for performance of offset test and display of offset value, (Zero offset correction)
CI	Compression Ignition (diesel)
COND	Condensor
CONUS	Continental United States
CPU	Central Processing Unit
CYL	Prompting Message on VTM that informs operator to dial in the number of cylinders.
DC (dc)	Direct Current
DCA	Diagnostic Connector Assembly
DCA ID	DCA Identification Number
DS	Direct Support
F	Farenheit
GEN (gen)	Generator
GO	Prompting Message on VTM that informs the operator to proceed with test.
HG (Hg)	Mercury
HZ (Hz)	Hertz
H2O	Water
ID	Identification Number
IN (in.)	Inch(es)

180

K (k)	Thousand
m Ohms	Milliohms
mV	Millivolts
PSI	Pounds per Square Inch
PSIA (psia)	Pounds per Square Inch, Absolute; Pressure Relative to zero pressure, i.e., Complete Vacuum.
PSIG (psig)	Pounds per Square Inch, Gage; Pressure Relative to Ambient Pressure
PSIS (psis)	Pounds per Square Inch, Sealed; Pressure Relative to a Sealed Pressure.
PVC	Polyvinyl Chloride
P-P	Peak-to-Peak
RAM	Random Access Memory
RPM	Revolutions per Minute
RTD	Resistive Temperature Device
SAE	Society of Automotive Engineers
SDR	System Development Requirement
SEC (sec)	Second
SI	Spark Ignition
Spec	Specification
STE/ICE	Simplified Test Equipment/Internal Combustion Engines
STE/ICE-R	Simplified Test Equipment/Internal Combustion Engines - Reprogrammable
TACH (tach)	Tachometer
TACOM	U.S. Army Tank-Automotive Command
TDC	Top Dead Center
TEMP	Temperature
TK	Transducer Kit
TM	Technical Manual

181

T/C	Turbocharger
VAC	Volts Alternating Current
VDC (vdc)	Volts Direct Current
VID	Vehicle Identification Number
VTC	Vehicle Test Cards
VTM	Vehicle Test Meter
w.r.W	With Respect to Pin W
XDCR	Transducer
P	Differential Pressure

182